Dist	COUNTY	ROUTE	POST MILES TOTAL PROJECT	SHEET No.	TOTAL SHEETS
04	Ala	880	22.6/24.0	401	760

B. Razeghi 11-16-11
REGISTERED CIVIL ENGINEER DATE

4-16-12
PLANS APPROVAL DATE

REGISTERED PROFESSIONAL ENGINEER B. RAZEGHI No. C52725 Exp. 12-31-12 CIVIL STATE OF CALIFORNIA

THE STATE OF CALIFORNIA OR ITS OFFICERS OR AGENTS SHALL NOT BE RESPONSIBLE FOR THE ACCURACY OR COMPLETENESS OF SCANNED COPIES OF THIS PLAN SHEET.

WMH CORPORATION
555 12th St
Suite 1900
Oakland, CA 94607

ACTC
1333 Broadway
Suites 220 & 300
Oakland, CA 94612

PLACE HMA DIKE

SHEET No.	STATION LIMITS	PLACE HOT MIX ASPHALT DIKE TYPE C	TYPE E	TYPE F	HOT MIX ASPHALT (TYPE A)
		LF	LF	LF	TON
L-1	"A" 313+00.00 L+ TO "A" 313+37.50 L+	37.5			0.3
L-1	"A" 313+37.50 L+ TO "A" 317+00.00 L+			362.5	4.8
L-1 & L-2	"A" 325+40.12 L+ TO "A" 328+21.06 L+		281		7.3
L-2	"A" 326+26.55 R+ TO "A" 326+95.60 R+	75.0			0.6
L-2	"A" 326+95.60 R+ TO "A" 327+33.10 R+			37.5	0.5
L-2	"MR2" 33+22.07 R+ TO "MR2" 37+88.24 R+		466		12.1
L-2 & L-4	"ML2" 21+59.83 L+ TO "A" 337+46.22 L+		1586		41.2
L-2 & L-4	"ML3" 31+71.00 L+ TO "ML3" 39+19.18 L+		748		19.4
C-31	"DL1-A" 70+65.68 L+ TO "DL1-B" 75+62.19 L+		497		12.9
L-7	"DR2" 65+67.22 R+ TO "DR2" 69+00.00 R+		333		8.7
L-7	"DR1" 69+00.00 L+ TO "DR1" 72+69.95 L+		370		9.6
L-7	"DL2" 72+16.21 R+ TO "DL2" 79+27.59 R+		711		18.5
L-7 & L-9	"A" 376+20.03 L+ TO "A" 379+77.79 L+		358		9.3
L-7 & L-9	"DL3" 76+90.00 L+ TO "DL3" 79+30.59 L+		241		6.3
L-9	"DL3" 79+30.59 L+ TO "DL3" 80+30.33 L+			100.0	1.3
FROM DETOUR QUANTITIES			657		17.1
TOTAL		112.5	6248	500	169.8

SURVEY MONUMENT

SHEET No.	STATION	OFFSET	SURVEY MONUMENT (TYPE D)
			EA
L-2	"MR2" STA 27+00.00	31.00' R+	1
L-2	"MA1" STA 16+63.00	53.31' L+	1
L-3	"MA1" STA 11+20.00	56.50' R+	1
L-7	"DR2" STA 74+00.00	30.00' R+	1
L-7	"DA1" STA 21+65.00	51.31' L+	1
L-8	"DA1" STA 13+50.00	8.26' L+	1
TOTAL			6

METAL BEAM GUARD RAILING

SHEET NUMBER	STATION LIMITS	LAYOUT TYPE	METAL BEAM GUARD RAILING	TRANSITION RAILING (TYPE WB)	END CAP	END ANCHOR ASSEMBLY (TYPE SFT)	ALTERNATIVE IN-LINE TERMINAL SYSTEM	ALTERNATIVE FLARED TERMINAL SYSTEM	VEGETATION CONTROL (MINOR CONCRETE)
			LF	EA	EA	EA	EA	EA	SQYD
L-1	"A" 313+37.50 TO "A" 317+00.00 L+		362.5		1	1			141
L-2	"A" 326+95.60 TO "A" 327+33.10 R+	16B	37.5			1		1	34
L-2	"MR1" 26+03.39 TO "MR1" 26+28.39 R+	12A	25.0	1			1		19
L-2	"MR1" 26+25.00 TO "MR1" 28+50.00 L+	11A	225.0			1	1		107
L-2	"ML2" 31+44.71 TO "ML2" 31+94.71 L+	12B	50.0	1				1	39
L-2	"MA1" 16+24.22 TO "MA1" 16+74.22 R+	12A	50.0	1			1		39
L-2	"MA1" 20+36.86 TO "MA1" 20+86.86 R+	12A	50.0	1			1		39
L-2	"MR2" 37+25.00 TO "MR2" 37+37.50 L+		12.5	1		1			24
L-2 & L-4	"ML3" 30+73.43 TO "ML3" 36+36.93 R+	11A	562.5			1	1		238
L-6	"DR1" 66+50.00 TO "DR1" 67+00.00 R+	12A	50.0	1			1		39
L-7	"DA1" 27+48.96 TO "DA1" 27+61.46 L+	12A	12.5	1			1		24
C-31	"DL1-A" 70+91.76 TO "DL1-A" 71+03.43 L+	12A	12.5	1			1		24
C-31	"DL1-A" 73+48.03 TO "DL1-A" 73+73.43 L+	12A	25.0	1			1		29
L-7	"DL3" 75+47.16 TO "DL3" 77+09.33 R+		162.5		1	1		1	83
TOTAL			1637.5	9	2	6	9	3	879

SUMMARY OF QUANTITIES

Q-5

REVISED BY	DATE REVISED	BG	BG	BG	LMH
		2/1/10	6/2/11	6/2/11	11/22/11

BENJAMIN GRIMM — CALCULATED-DESIGNED BY
BEN RAZEGHI — CHECKED BY
TIMOTHY J. LEE — CONSULTANT FUNCTIONAL SUPERVISOR

STATE OF CALIFORNIA - DEPARTMENT OF TRANSPORTATION
Caltrans

X:\880_Marina-Davis\000_CAD\Sheets\0000_Final\PSE-Elec\ADDSubmittal\Final_Submittal_20111227\880MDRefMerge_20111226\EA04-3g921_CADD-SUBMITTAL_20111227\43g921pa005.dgn

LAST REVISION 11-16-11 | DATE PLOTTED => 19-APR-2012 | TIME PLOTTED => 16:48

Dist	COUNTY	ROUTE	POST MILES TOTAL PROJECT	SHEET No.	TOTAL SHEETS
04	Ala	880	22.6/24.0	402	760

B. Razeghi 11-16-11
REGISTERED CIVIL ENGINEER DATE

4-16-12
PLANS APPROVAL DATE

REGISTERED PROFESSIONAL ENGINEER B. RAZEGHI No. C52725 Exp. 12-31-12 CIVIL STATE OF CALIFORNIA

THE STATE OF CALIFORNIA OR ITS OFFICERS OR AGENTS SHALL NOT BE RESPONSIBLE FOR THE ACCURACY OR COMPLETENESS OF SCANNED COPIES OF THIS PLAN SHEET.

WMH CORPORATION
555 12th St
Suite 1900
Oakland, CA 94607

ACTC
1333 Broadway
Suites 220 & 300
Oakland, CA 94612

MINOR CONCRETE

SHEET No.	STATION	LOCATION	(MISCELLANEOUS CONSTRUCTION) CURB (TYPE A2-6)	CURB (TYPE A1-6)	ISLAND PAVING	SIDEWALK	CAP	TEXTURED PAVING	CLASS 3 AGGREGATE BASE
			CY					SQFT	CY
C-1 & C-2	"MA1" 08+80.78 TO "MA1" 13+56.87	Lt	28			35			62
C-1 & C-2	"MA1" 09+72.02 TO "MA1" 13+76.63	Rt	21			26			46
C-1 & C-2	"MA1" 08+81.04 TO "MA1" 13+40.04	Lt/Rt		24					17
C-1 & C-2	"MA1" 08+81.04 TO "MA1" 13+40.04	Lt/Rt			16				24
C-2	"MA1" 13+69.74 TO "MA1" 13+85.19	Rt						1095	0
C-2 & C-3	"MA1" 13+67.46 TO "MA1" 16+67.96	Lt	22			25			45
C-2	"MA1" 13+77.17 TO "MA1" 13+77.72	Rt		1	1				1
C-2 & C-3	"MA1" 14+34.52 TO "MA1" 16+97.34	Rt	16			19			34
C-3 & C-4	"MA1" 20+13.90 TO "MA1" 22+59.57	Lt	14			17			30
C-3 & C-4	"MA1" 20+49.19 TO "MA1" 22+19.43	Rt	14			17			30
C-4	"MA1" 22+59.57 TO "MA1" 23+50.93	Lt	12			15			26
C-4	"MA1" 24+05.87 TO "MA1" 24+16.02	Lt/Rt			1				2
C-4 & C-5	"MA1" 24+03.02 TO "MA1" 27+20.00	Lt	19			23			42
C-4 & C-5	"MA1" 22+35.92 TO "MA1" 26+00.00	Rt	22			33			57
C-4 & C-5	"MA1" 24+05.87 TO "MA1" 27+20.00	Lt/Rt		16					12
C-6	"DA1" 09+88.63 TO "MA1" 10+20.84	Lt	2			1			2
C-6	"DA1" 11+25.58 TO "DA1" 11+39.18	Lt	1			1			3
C-6	"DA1" 09+71.93 TO "DA1" 10+12.37	Rt	4			1			3
C-6	"DA1" 10+64.85 TO "DA1" 10+77.55	Rt	1						0
C-6	"DA1" 13+49.09 TO "DA1" 13+93.62	Lt	3			2			5
C-6	"DA1" 11+38.64 TO "DA1" 12+24.79	Lt/Rt	21						7
C-6	"DA1" 12+68.96 TO "DA1" 13+90.98	Rt	8						3
C-6	"DA1" 14+15.58 TO "DA1" 14+40.07	Rt	9						3
C-6 & C-7	"DA1" 14+32.02 TO "DA1" 19+39.58	Lt	37			38			69
C-6 & C-7	"DA1" 15+35.15 TO "DA1" 19+41.97	Rt	29			34			60
C-6 & C-7	"DA1" 14+65.15 TO "DA1" 18+96.87	Lt/Rt		23	28				59
C-7	"DA1" 19+85.65 TO "DA1" 20+22.72	Lt	7			6			11
C-7 & C-8	"DA1" 20+49.56 TO "DA1" 21+71.80	Lt	8			9			16
C-7 & C-8	"DA1" 19+42.88 TO "DA1" 22+08.03	Rt	8			7			13
C-7 & C-8	"DA1" 20+22.50 TO "DA1" 21+89.91	Lt/Rt		9	12				24
C-8 & C-9	"DA1" 24+96.30 TO "DA1" 31+52.20	Lt	42			50			89
C-8 & C-9	"DA1" 25+32.53 TO "DA1" 27+74.17	Rt	15			7			16
C-8 & C-9	"DA1" 25+14.41 TO "DA1" 27+95.48	Lt/Rt		15	23				45
C-9	"DA1" 31+48.64 TO "DA1" 31+73.93	Lt	1						0
C-9	"DA1" 28+04.24 TO "DA1" 28+26.29	Rt	5			6			11
C-9	"DA1" 28+93.81 TO "DA1" 32+19.60	Rt	20			25			44
C-9	"DA1" 28+80.00 TO "DA1" 32+19.44	Lt/Rt		18	24				49
L-1 TO L-9	-							10456	
L-5	"A" 357+30 TO 358+50	Lt					3		
L-6	"DR1" 69+68 TO 70+85	Lt					3		
L-6 & L-7	"A" 358+50 TO 370+22	Lt					29		
L-9	"DL3" 80+30 TO "A" 385+00	Lt					12		
SUBTOTAL			389	106	105	397	47	11551	960
			1044					11551	960
GUTTER FROM RETAINING WALL QUANTITIES			56						
GUTTER DEPRESSION FROM DRAINAGE QUANTITIES			178.4						
DITCH LINING FROM DRAINAGE QUANTITIES			65						
TOTAL			1343.4					11551	* 960

* FOR TOTAL QUANTITY, SEE SHEET Q-1.

SUMMARY OF QUANTITIES

Q-6

STATE OF CALIFORNIA - DEPARTMENT OF TRANSPORTATION
Caltrans

BENJAMIN GRIMM — REVISED BY — BG — LMH — LMH
BEN RAZEGHI — DATE REVISED — 6/2/11 — 11/22/11 — 3/23/12
TIMOTHY J. LEE — CONSULTANT FUNCTIONAL SUPERVISOR — CALCULATED-DESIGNED BY — CHECKED BY

X:\880_Marina-Davis\000_CAD\Sheets\0000_Final\PSE-Elec\ADDSubmittal\Final_Submittal_20111227\880MDRefMerge_20111226\EA04-3g9211_CADD-SUBMITTAL_20111227\43g921pa006.dgn

LAST REVISION 11-16-11 | DATE PLOTTED => 25-APR-2012 | TIME PLOTTED => 11:38

Dist	COUNTY	ROUTE	POST MILES TOTAL PROJECT	SHEET No.	TOTAL SHEETS
04	Ala	880	22.6/24.0	403	760

B. Razeghi 11-16-11
REGISTERED CIVIL ENGINEER DATE

4-16-12
PLANS APPROVAL DATE

REGISTERED PROFESSIONAL ENGINEER B. RAZEGHI No. C52725 Exp. 12-31-12 CIVIL STATE OF CALIFORNIA

THE STATE OF CALIFORNIA OR ITS OFFICERS OR AGENTS SHALL NOT BE RESPONSIBLE FOR THE ACCURACY OR COMPLETENESS OF SCANNED COPIES OF THIS PLAN SHEET.

WMH CORPORATION
555 12th St
Suite 1900
Oakland, CA 94607

ACTC
1333 Broadway
Suites 220 & 300
Oakland, CA 94612

REMOVE CONCRETE

STATION LIMITS	LOCATION	REMOVE CONRETE CURB	REMOVE CONRETE (CURB AND GUTTER)	REMOVE CONCRETE SIDEWALK	REMOVE CONCRETE ISLAND	REMOVE CONCRETE GUTTER
		LF		SQFT		CY
"MA1" 31+00 TO 31+65	L+		65			
"MA1" 8+81 TO 11+31	L+		250			
"MA1" 11+91 TO 12+00	L+		77			
"MA1" 12+00 TO 17+30	L+	529				
"MA1" 9+72 TO 11+68	R+		163	1459		
"MA1" 11+93 TO 13.54	R+		210	957		
"ML1" 28+25 TO 32+90	L+		465			
"ML2" 21+51 TO 27+69	L+	644				
"MA1" 13+74 TO 14+48	R+		122	290		
"MA1" 14+56 TO 17+37	R+		283	1991		
"MA1" 8+81 TO 13+56	L+/R+				2064	
"ML2" 21+00 TO 31+50	L+/R+					60
"MR2" 28+74 TO 38+17	L+	999				
"MR2" 28+77 TO "MA1" 21+40	R+					69
"MA1" 19+86 TO 21+40	L+		156			
"MA1"22+49 TO 23+73	L+		130			
"MR3" 26+91 TO 31+36	R+		459			
"MR3" 27+74 TO 27+88	R+					2
"MA1" 24+06 TO 25+56	L+		197			
"MA1" 26+20 TO 27+20	L+		100			
"MA1" 20+14 TO 21+97	R+		258	1582		
"MA1" 22+09 TO 26+00	R+		410	2538		
"MA1" 24+07 TO 27+20	L+/R+				4634	
"DA1" 9+89 TO 10+22	L+		40	255		
"DA1" 9+71 TO 10+15	R+		66	309		
"DA1" 11+24 TO 11+38	L+		22	189		
"DA1" 10+63 TO 10+76	R+		21	123		
"DA1" 11+38 TO 12+25	L+/R+		363	1037		
"DA1" 13+49 TO 13+95	L+		57	363		
"DA1" 14+31 TO 16+64	L+		246	1264		
"DA1" 17+52 TO 19+40	L+		200	1146		
"DA1" 12+69 TO 13+92	R+		143	114		
"TD1" 12+04 TO 11+36	L+/R+		144	340		
"TD1" 10+44 TO "DA1" 20+21	R+		625	3193		
"DA1" 14+61 TO 19+38	L+/R+		972	3262		
"DA1" 19+96 TO 21+13	R+	257	145	668		
"DA1" 20+07 TO 21+70	R+		338	537		
"DL3" 74+66 TO 75+11	R+		249	432		
"DA1" 20+88 TO 23+50	L+/R+		111	757		
"DA1" 24+95 TO 28+11	L+/R+		325	2654		
"DA1" 27+94 TO 28+10	L+		17			
"DA1" 28+21 TO 32+19	L+		400			
"DR3" 66+55 TO 66+80	R+		25			
"DA1" 28+47 TO 32+19	L+/R+				1134	
"DA1" 27+75 TO 28+14	R+		52	309		
"DA1" 28+55 TO 32+20	R+		309	2275		
TOTAL		2429	8216	28044	7833	131

PLACE HMA (Misc AREA)

LOCATION	AREA	HMA (TYPE A)
	SQYD	TON
FROM DRAINAGE QUANTITIES	258	*
FROM DETOUR QUANTITIES	1763	397
TOTAL	2021	397

* INCLUDED IN HMA QUANTITY ON DRAINAGE PLANS

REMOVE METAL BEAM GUARD RAILING

SHEET No.	STATION LIMITS	REMOVE METAL BEAM GUARD RAILING
		LF
L-1	"A" 313+47.71 L+ TO "A" 314+99.38 L+	152
L-1	"A" 316+44.97 L+ TO "ML1" 21+40.34 L+	496
L-2	"MR1" 26+07.01 L+ TO "MR1" 28+72.57 L+	266
L-2	"A" 328+74.02 R+ TO "A" 329+14.71 R+	100
L-2	"MA1" 19+98.12 R+ TO "MA1" 21+31.15 L+	133
L-2	"A" 330+43.00 L+ TO "A" 330+61.47 L+	54
L-7	"A" 372+27.78 L+ TO "A" 373+86.59 L+	159
TOTAL		1360

PEDESTRIAN BARRICADE

SHEET No.	EA
C-2	4
C-4	6
C-9	1
TOTAL	11

COLD PLANE ASPHALT CONCRETE PAVEMENT

SHEET No.	STATION LIMITS			LOCATION	0.10' AREA	0.25' AREA	0.35' AREA	0.45' AREA
					SQYD			
L-1 & L-2	313+00.00	TO	329+00.00	"A" LINE	9476			
L-1 & L-2	313+00.00	TO	329+64.00	"A" LINE			924	
L-2	329+00.00	TO	330+80.00	"A" LINE	2242			
L-2 & L-4	330+82.00	TO	334+12.00	"A" LINE			183	
L-2, L-4, L-5, L-6 & L-7	330+80.00	TO	371+50.00	"A" LINE	25899			
L-3	26+00.00	TO	27+20.00	"MA1" LINE	1047			
L-3	8+81.05	TO	10+00.00	"MA1" LINE	1334			
L-4 , L-5 & L-6	334+12.00	TO	360+50.00	"A" LINE				1466
L-6 & L-7	360+50.00	TO	372+48.00	"A" LINE		666		
L-7	371+50.00	TO	373+50.00	"A" LINE	2218			
L-7	32+19.44	TO	31+00.00	"DA1" LINE	659			
L-7 & L-9	373+50.00	TO	385+00.00	"A" LINE	6402			
L-7 & L-9	373+67.00	TO	385+00.00	"A" LINE		629		
L-8	15+34.47	TO	11+39.15	"DA1" LINE	5491			
SUB-TOTAL					58636			
FROM DETOUR PLANS					610			
TOTAL					59246			

SUMMARY OF QUANTITIES

Q-7

LMH	11/22/11		
BG	6/2/11		
BG	2/1/10	REVISED BY	DATE REVISED
BENJAMIN GRIMM	BEN RAZEGHI	CALCULATED-DESIGNED BY	CHECKED BY
TIMOTHY J. LEE		CONSULTANT FUNCTIONAL SUPERVISOR	

STATE OF CALIFORNIA - DEPARTMENT OF TRANSPORTATION
Caltrans

X:\880_Marina-Davis\000_CAD\Sheets\0000_Final PSE-ElecCADSubmittal\Final_Submittal_20111227\880MDRefMerge_20111226\EA04-3g921_CADD-SUBMITTAL_20111227\43g921pa007.dgn

LAST REVISION 11-16-11 | DATE PLOTTED => 19-APR-2012 | TIME PLOTTED => 16:49

Dist	COUNTY	ROUTE	POST MILES TOTAL PROJECT	SHEET No.	TOTAL SHEETS
04	Ala	880	22.6/24.0	404	760

REGISTERED CIVIL ENGINEER 11-16-11 DATE

4-16-12
PLANS APPROVAL DATE

REGISTERED PROFESSIONAL ENGINEER SEAN A. CHARLES No. C50767 Exp. 9-30-13 CIVIL STATE OF CALIFORNIA

THE STATE OF CALIFORNIA OR ITS OFFICERS OR AGENTS SHALL NOT BE RESPONSIBLE FOR THE ACCURACY OR COMPLETENESS OF SCANNED COPIES OF THIS PLAN SHEET.

WMH CORPORATION
555 12th St
Suite 1900
Oakland, CA 94607

ACTC
1333 Broadway
Suites 220 & 300
Oakland, CA 94612

NOTE:

FOR ACCURATE RIGHT OF WAY DATA,
CONTACT RIGHT OF WAY ENGINEERING AT THE DISTRICT OFFICE.

LEGEND

No.	ROADSIDE SIGN (WITH NUMBER)
X	OVERHEAD SIGN (WITH LETTER)
	ROADSIDE SIGN ONE POST
	ROADSIDE SIGN TWO POST
	INSTALL ROADSIDE SIGN PANEL ON EXISTING POST
	EXISTING ROADSIDE SIGN TO REMAIN
	REMOVE ROADSIDE SIGN
	RELOCATE ROADSIDE SIGN (--FROM) (-TO)
BM	BARRIER MOUNTED
SSBM	STRAP AND SADDLE BRACKET METHOD

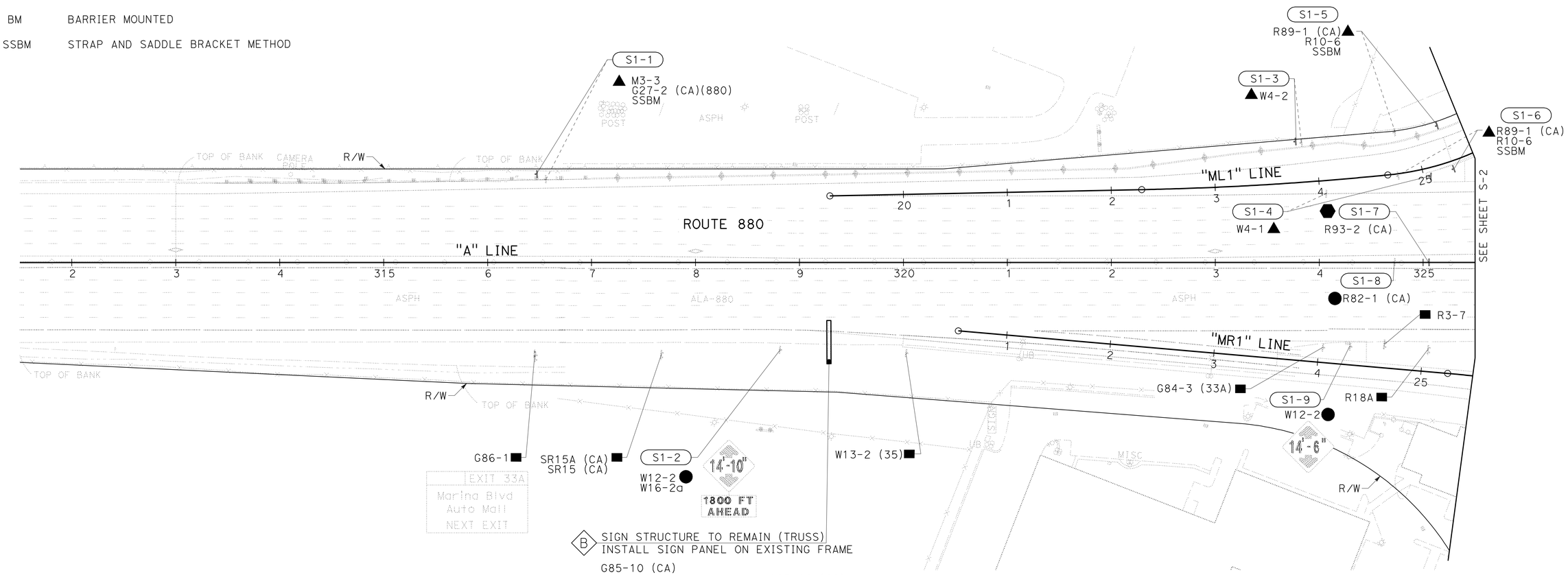

B SIGN STRUCTURE TO REMAIN (TRUSS)
INSTALL SIGN PANEL ON EXISTING FRAME

G85-10 (CA)
W61D (CA)

G85-10 (CA)

EXIT 33B	EXIT 33A
Marina Blvd West EXIT ONLY	Marina Blvd Auto Mall

SEE SHEET SD-4, SD-5
REMOVE SIGN FROM SIGN FRAME
G83-1 (CA)

Marina Blvd
WEST
ONLY EAST

SIGN PLAN

SCALE: 1" = 50'

S-1

APPROVED FOR SIGN WORK ONLY

HAC	5/18/11		
HAC	4/13/11		
LMH	8/5/10		
REVISED BY	DATE REVISED		
HEATHER A. CHARLES		CALCULATED-DESIGNED BY	
SEAN A. CHARLES		CHECKED BY	
TIMOTHY J. LEE		CONSULTANT FUNCTIONAL SUPERVISOR	

STATE OF CALIFORNIA - DEPARTMENT OF TRANSPORTATION

Caltrans

X:\880_Marina-Davis\000_CAD\Sheets\0000_Final PSE-Elec CADD Submittal\Final_Submittal_20111227\880MDRefMerge_20111226\EA04-3g9211_CADD-SUBMITTAL_20111227\43g921oa001.dgn

LAST REVISION 11-16-11
DATE PLOTTED => 19-APR-2012
TIME PLOTTED => 19:02

Dist	COUNTY	ROUTE	POST MILES TOTAL PROJECT	SHEET No.	TOTAL SHEETS
04	Ala	880	22.6/24.0	405	760

REGISTERED CIVIL ENGINEER 11-16-11 DATE

4-16-12
PLANS APPROVAL DATE

REGISTERED PROFESSIONAL ENGINEER SEAN A. CHARLES No. C50767 Exp. 9-30-13 CIVIL STATE OF CALIFORNIA

THE STATE OF CALIFORNIA OR ITS OFFICERS OR AGENTS SHALL NOT BE RESPONSIBLE FOR THE ACCURACY OR COMPLETENESS OF SCANNED COPIES OF THIS PLAN SHEET.

WMH CORPORATION
555 12th St
Suite 1900
Oakland, CA 94607

ACTC
1333 Broadway
Suites 220 & 300
Oakland, CA 94612

NOTE:
FOR ACCURATE RIGHT OF WAY DATA,
CONTACT RIGHT OF WAY ENGINEERING AT THE DISTRICT OFFICE.

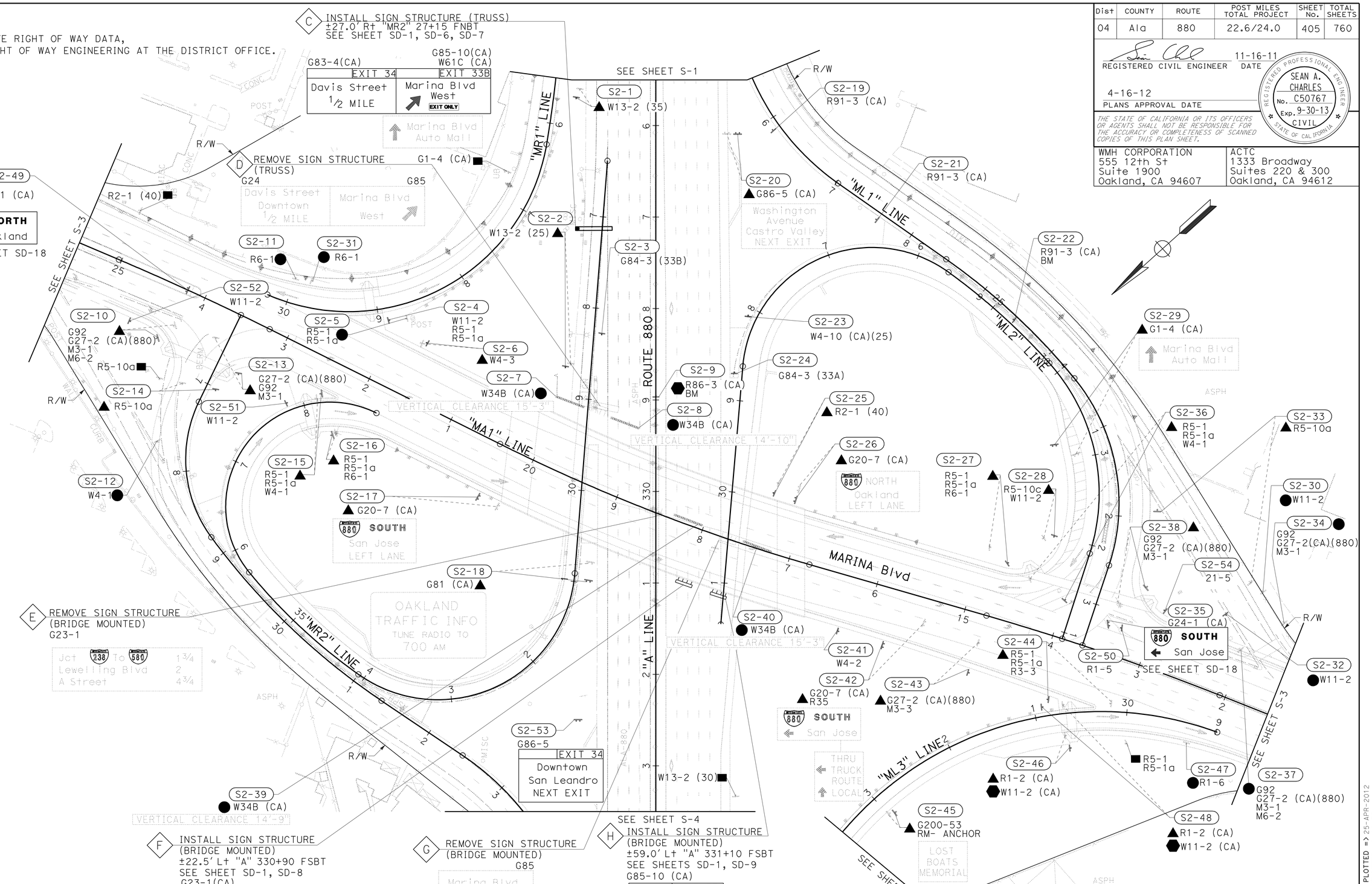

FOR LEGEND, SEE SHEET S-1

APPROVED FOR SIGN WORK ONLY

SIGN PLAN
SCALE: 1" = 50'

S-2

HAC	5/18/11		
HAC	4/13/11		
LMH	8/5/10	REVISED BY	DATE REVISED
HEATHER A. CHARLES		CALCULATED-DESIGNED BY	
SEAN A. CHARLES		CHECKED BY	
TIMOTHY J. LEE		CONSULTANT FUNCTIONAL SUPERVISOR	

STATE OF CALIFORNIA - DEPARTMENT OF TRANSPORTATION
Caltrans

X:\880_Marina-Davis\000_CAD\Sheets\0000_Final PSE-ElecCADDSubmittal\Final_Submittal_20111227\880MDRefMerge_20111226\EA04-3g9211_CADD-SUBMITTAL_20111227\43a921oa002.dgn

LAST REVISION 11-16-11 | DATE PLOTTED => 25-APR-2012 | TIME PLOTTED => 11:38

Dist	COUNTY	ROUTE	POST MILES TOTAL PROJECT	SHEET No.	TOTAL SHEETS
04	Ala	880	22.6/24.0	406	760

REGISTERED CIVIL ENGINEER 11-16-11 DATE

4-16-12
PLANS APPROVAL DATE

REGISTERED PROFESSIONAL ENGINEER SEAN A. CHARLES No. C50767 Exp. 9-30-13 CIVIL STATE OF CALIFORNIA

THE STATE OF CALIFORNIA OR ITS OFFICERS OR AGENTS SHALL NOT BE RESPONSIBLE FOR THE ACCURACY OR COMPLETENESS OF SCANNED COPIES OF THIS PLAN SHEET.

WMH CORPORATION
555 12th St
Suite 1900
Oakland, CA 94607

ACTC
1333 Broadway
Suites 220 & 300
Oakland, CA 94612

NOTE:
FOR ACCURATE RIGHT OF WAY DATA,
CONTACT RIGHT OF WAY ENGINEERING AT THE DISTRICT OFFICE.

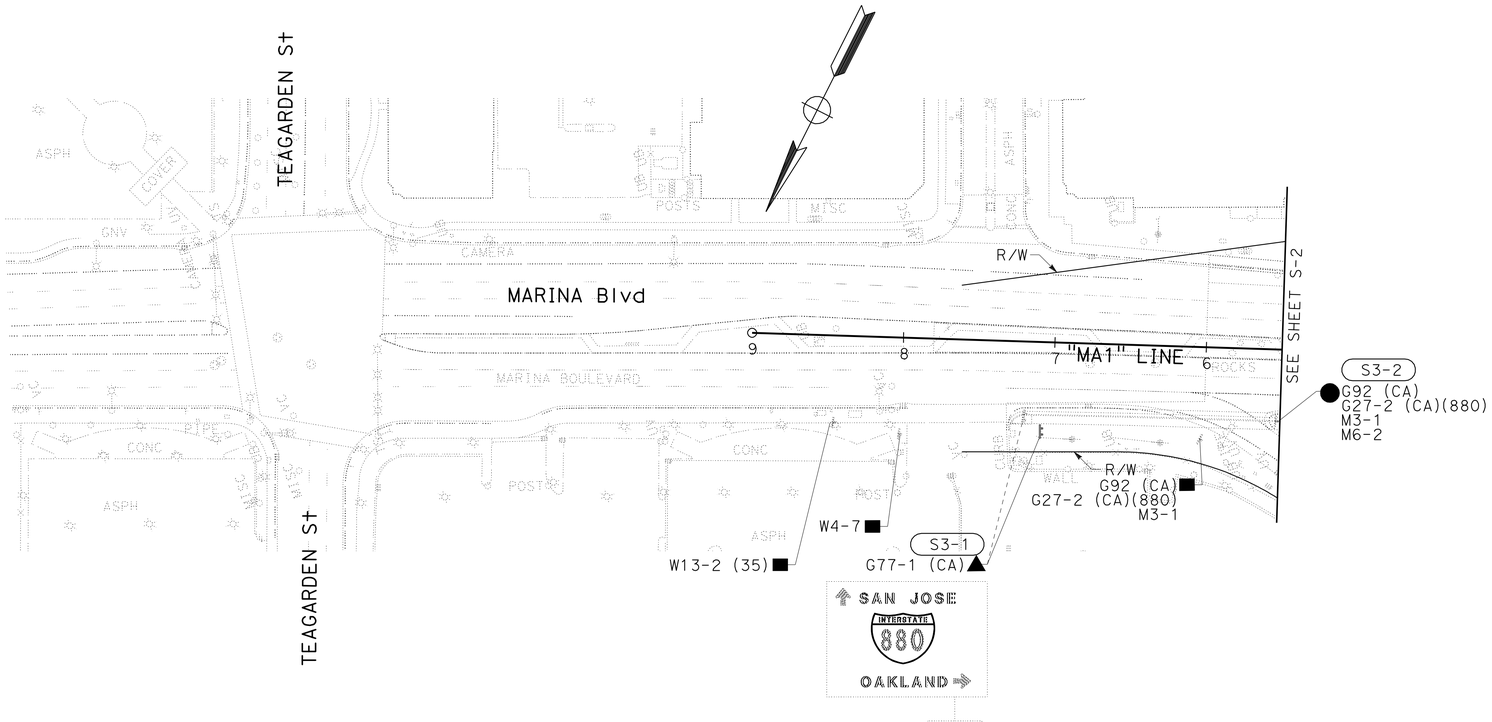

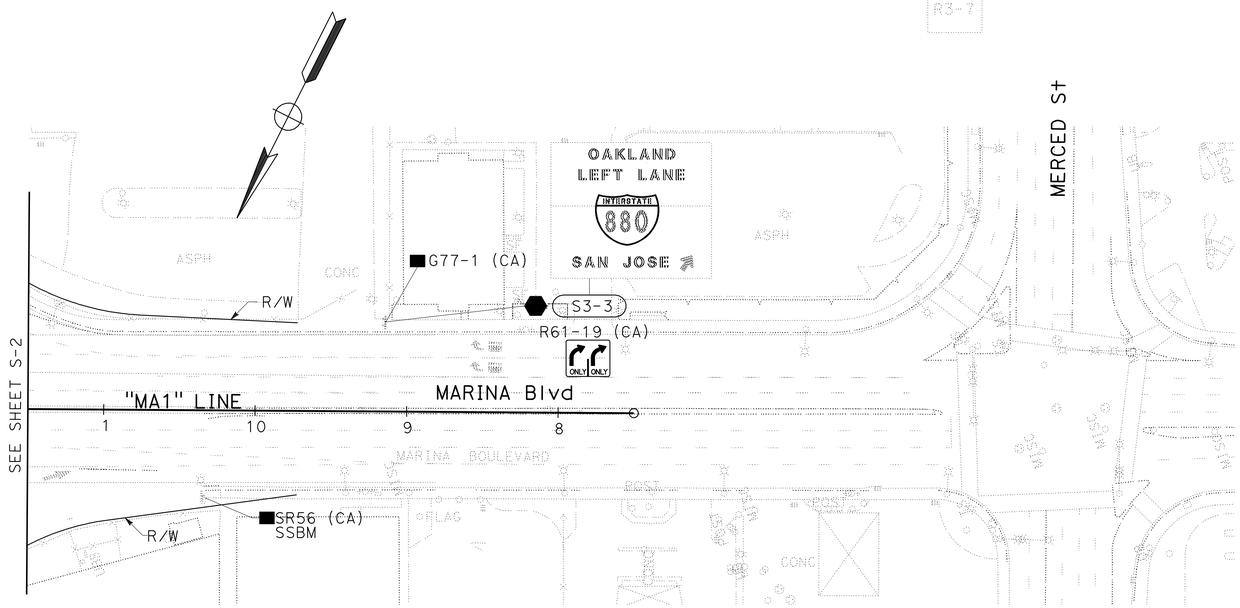

FOR LEGEND,
SEE SHEET S-1

APPROVED FOR SIGN WORK ONLY

SIGN PLAN

SCALE: 1" = 50'

S-3

STATE OF CALIFORNIA - DEPARTMENT OF TRANSPORTATION
Caltrans

CHECKED BY	CALCULATED-DESIGNED BY	HEATHER A. CHARLES	REVISED BY	LMH	HAC	HAC
	TIMOTHY J. LEE	SEAN A. CHARLES	DATE REVISED	8/5/10	4/13/11	5/18/11

CONSULTANT FUNCTIONAL SUPERVISOR

X:\880_Marina-Davis\000_CAD\Sheets\0000_Final PSE-ElecCADSubmittal\Final_Submittal_20111227\880MDRefMerge_20111226\EA04-3g9211_CADD-SUBMITTAL_20111227\43a9210a003.dgn

LAST REVISION 11-16-11 | DATE PLOTTED => 25-APR-2012 | TIME PLOTTED => 11:38

Dist	COUNTY	ROUTE	POST MILES TOTAL PROJECT	SHEET No.	TOTAL SHEETS
04	Ala	880	22.6/24.0	407	760

REGISTERED CIVIL ENGINEER 11-16-11 DATE

4-16-12
PLANS APPROVAL DATE

REGISTERED PROFESSIONAL ENGINEER SEAN A. CHARLES No. C50767 Exp. 9-30-13 CIVIL STATE OF CALIFORNIA

THE STATE OF CALIFORNIA OR ITS OFFICERS OR AGENTS SHALL NOT BE RESPONSIBLE FOR THE ACCURACY OR COMPLETENESS OF SCANNED COPIES OF THIS PLAN SHEET.

WMH CORPORATION
555 12th St
Suite 1900
Oakland, CA 94607

ACTC
1333 Broadway
Suites 220 & 300
Oakland, CA 94612

NOTE:
FOR ACCURATE RIGHT OF WAY DATA,
CONTACT RIGHT OF WAY ENGINEERING AT THE DISTRICT OFFICE.

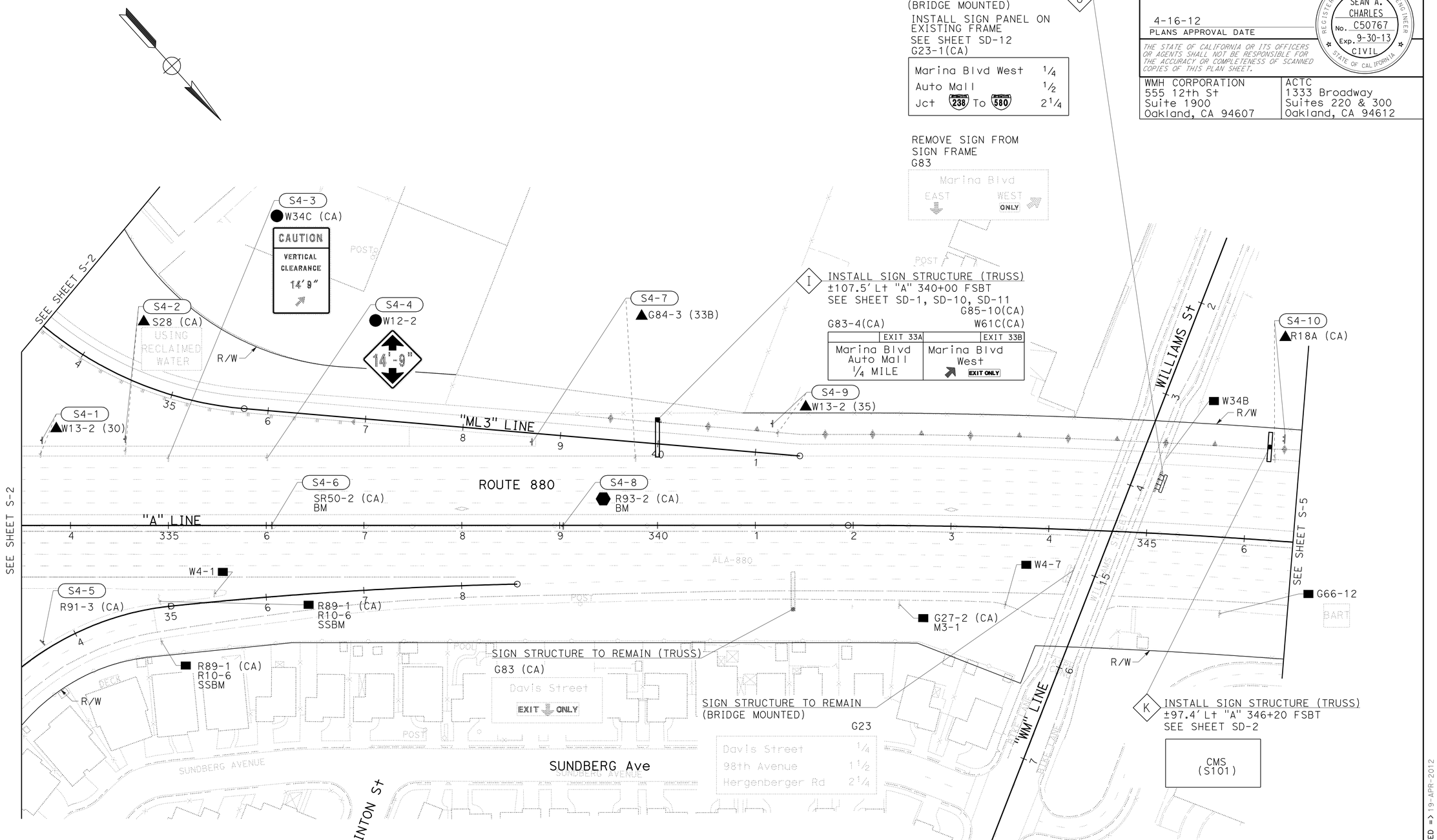

FOR LEGEND, SEE SHEET S-1

SIGN PLAN

SCALE: 1" = 50'

APPROVED FOR SIGN WORK ONLY

S-4

HAC	5/18/11		
HAC	4/13/11		
LMH	8/5/10		
REVISED BY	DATE REVISED		
HEATHER A. CHARLES			
SEAN A. CHARLES			
CALCULATED-DESIGNED BY			
CHECKED BY			
TIMOTHY J. LEE			
CONSULTANT FUNCTIONAL SUPERVISOR			

STATE OF CALIFORNIA - DEPARTMENT OF TRANSPORTATION

Caltrans

X:\880_Marina-Davis\000_CAD\Sheets\0000_Final PSE-Elec\CADDSubmittal\Final_Submittal_20111227\880MDRefMerge_20111226\EA04-3g9211_CADD-SUBMITTAL_20111227\43a921oa004.dgn

LAST REVISION 11-16-11
DATE PLOTTED => 19-APR-2012
TIME PLOTTED => 19:02

BORDER LAST REVISED 7/2/2010
USERNAME => s128843
DGN FILE => 43a921oa004.dgn
RELATIVE BORDER SCALE IS IN INCHES 0 1 2 3
UNIT 0725
PROJECT NUMBER & PHASE 04120003391

Dist	COUNTY	ROUTE	POST MILES TOTAL PROJECT	SHEET No.	TOTAL SHEETS
04	Ala	880	22.6/24.0	408	760

REGISTERED CIVIL ENGINEER 11-16-11 DATE

4-16-12
PLANS APPROVAL DATE

REGISTERED PROFESSIONAL ENGINEER SEAN A. CHARLES No. C50767 Exp. 9-30-13 CIVIL STATE OF CALIFORNIA

THE STATE OF CALIFORNIA OR ITS OFFICERS OR AGENTS SHALL NOT BE RESPONSIBLE FOR THE ACCURACY OR COMPLETENESS OF SCANNED COPIES OF THIS PLAN SHEET.

WMH CORPORATION
555 12th St
Suite 1900
Oakland, CA 94607

ACTC
1333 Broadway
Suites 220 & 300
Oakland, CA 94612

NOTE:
FOR ACCURATE RIGHT OF WAY DATA,
CONTACT RIGHT OF WAY ENGINEERING AT THE DISTRICT OFFICE.

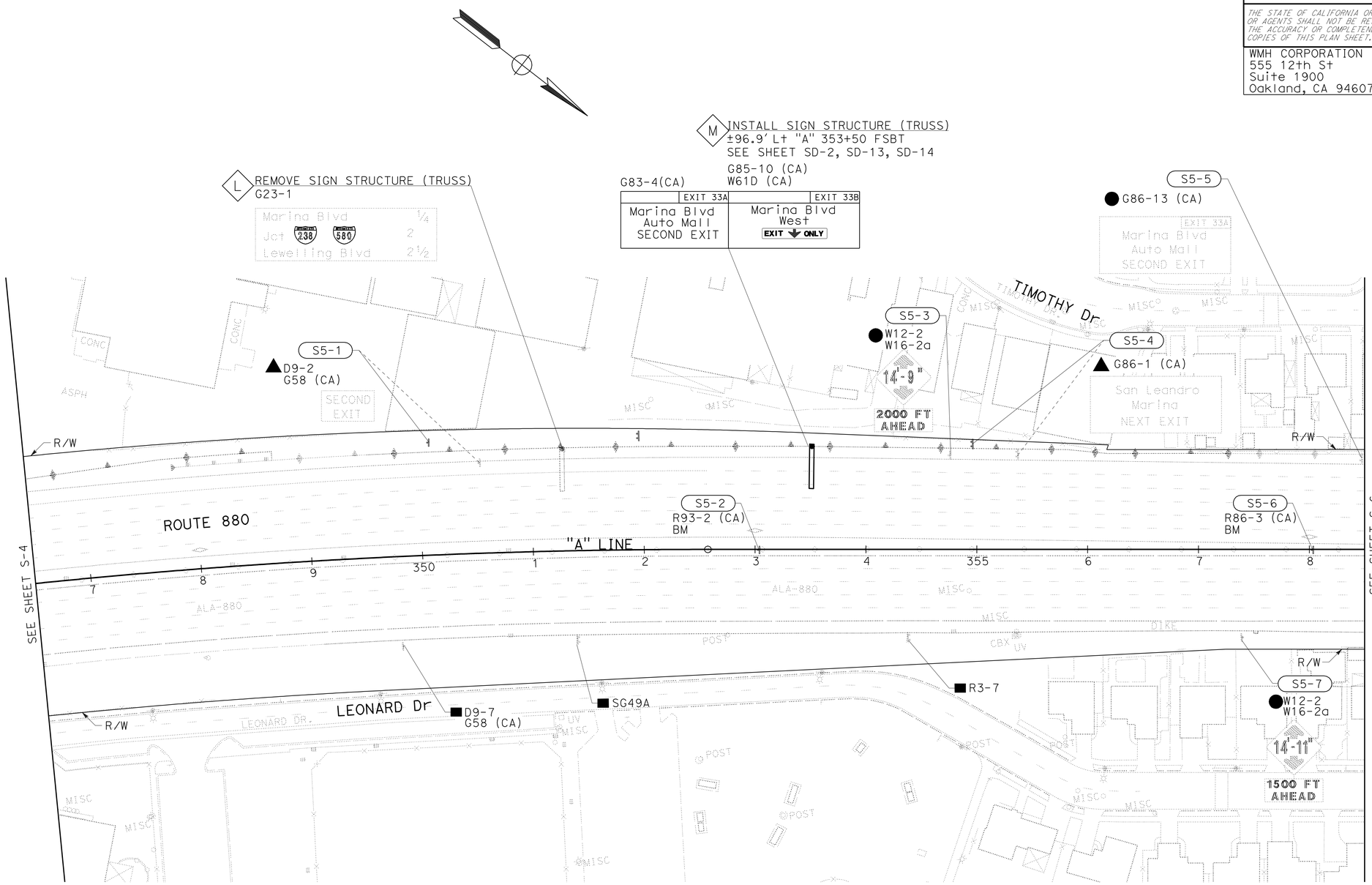

FOR LEGEND,
SEE SHEET S-1

SIGN PLAN

SCALE: 1" = 50'

S-5

APPROVED FOR SIGN WORK ONLY

HAC	5/18/11		
HAC	4/13/11		
LMH	8/5/10		
REVISED BY	DATE REVISED		
HEATHER A. CHARLES			
SEAN A. CHARLES			
CALCULATED-DESIGNED BY			
CHECKED BY			
TIMOTHY J. LEE			
CONSULTANT FUNCTIONAL SUPERVISOR			

STATE OF CALIFORNIA - DEPARTMENT OF TRANSPORTATION
Caltrans

X:\880_Marina-Davis\000_CAD\Sheets\0000_Final PSE-ElecCADDSubmittal\Final_Submittal_20111227\880MDRefMerge_20111226\EA04-3g921_CADD-SUBMITTAL_20111227\43g921oa005.dgn

LAST REVISION 11-16-11 | DATE PLOTTED => 19-APR-2012 | TIME PLOTTED => 19:10

Dist	COUNTY	ROUTE	POST MILES TOTAL PROJECT	SHEET No.	TOTAL SHEETS
04	Ala	880	22.6/24.0	409	760

REGISTERED CIVIL ENGINEER 11-16-11 DATE

4-16-12
PLANS APPROVAL DATE

REGISTERED PROFESSIONAL ENGINEER SEAN A. CHARLES No. C50767 Exp. 9-30-13 CIVIL STATE OF CALIFORNIA

THE STATE OF CALIFORNIA OR ITS OFFICERS OR AGENTS SHALL NOT BE RESPONSIBLE FOR THE ACCURACY OR COMPLETENESS OF SCANNED COPIES OF THIS PLAN SHEET.

WMH CORPORATION
555 12th St
Suite 1900
Oakland, CA 94607

ACTC
1333 Broadway
Suites 220 & 300
Oakland, CA 94612

NOTE:
FOR ACCURATE RIGHT OF WAY DATA,
CONTACT RIGHT OF WAY ENGINEERING AT THE DISTRICT OFFICE.

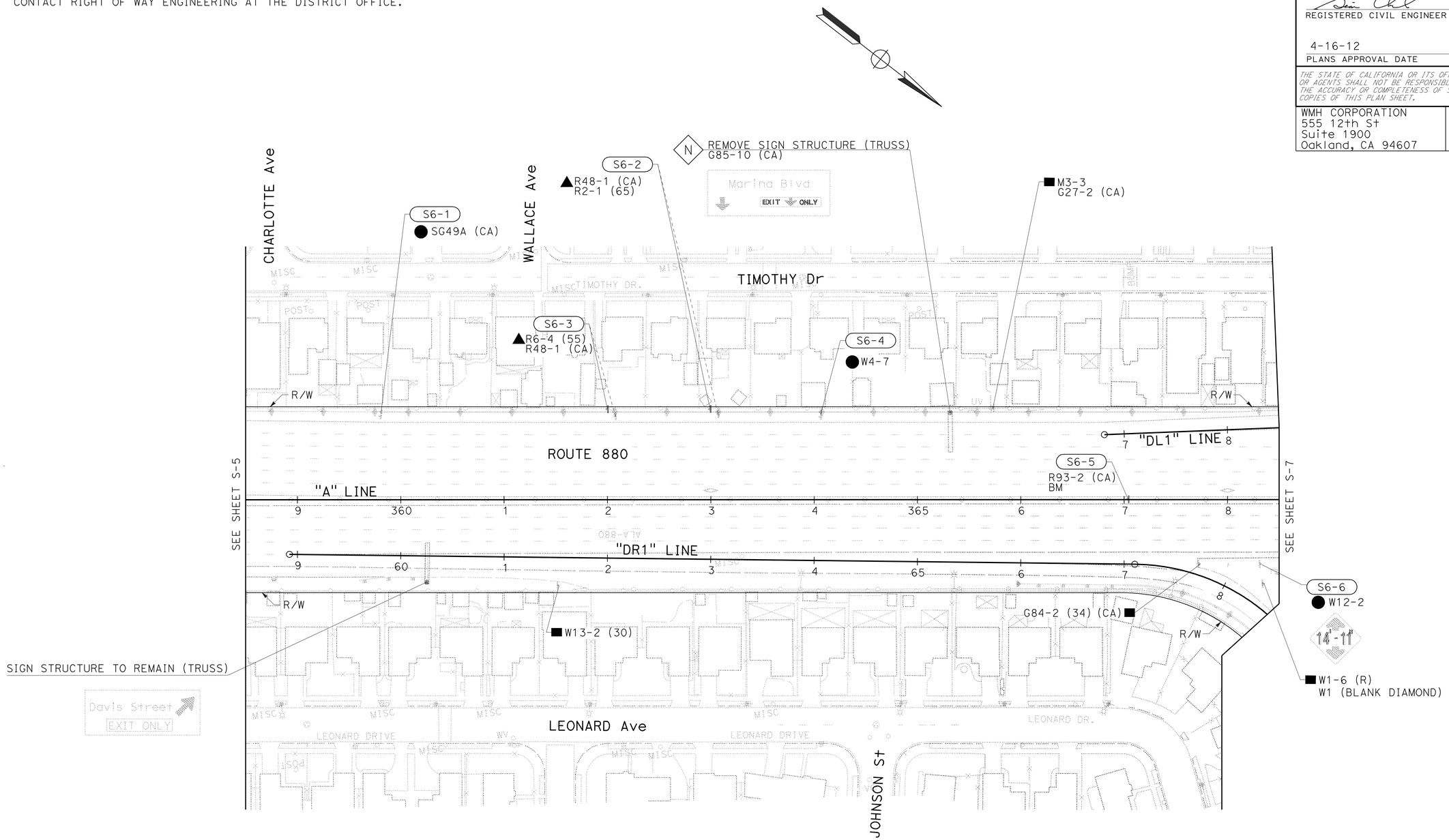

FOR LEGEND,
SEE SHEET S-1

SIGN PLAN

SCALE: 1" = 50'

S-6

APPROVED FOR SIGN WORK ONLY

HAC	5/18/11	REVISED BY	HEATHER A. CHARLES
HAC	4/13/11	DATE REVISED	SEAN A. CHARLES
LMH	8/5/10	CALCULATED-DESIGNED BY	TIMOTHY J. LEE
		CHECKED BY	
		SUPERVISOR	

CONSULTANT FUNCTIONAL SUPERVISOR

STATE OF CALIFORNIA - DEPARTMENT OF TRANSPORTATION

Caltrans

X:\880_Marina-Davis\000_CAD\Sheets\0000_Final PSE-ElecCADDSubmittal\Final_Submittal_20111227\880MDRefMerge_20111226\EA04-3g9211_CADD-SUBMITTAL_20111227\43g921oa006.dgn

LAST REVISION 11-16-11 | DATE PLOTTED => 19-APR-2012 | TIME PLOTTED => 19:03

Dist	COUNTY	ROUTE	POST MILES TOTAL PROJECT	SHEET No.	TOTAL SHEETS
04	Ala	880	22.6/24.0	410	760

REGISTERED CIVIL ENGINEER 11-16-11 DATE

4-16-12
PLANS APPROVAL DATE

REGISTERED PROFESSIONAL ENGINEER SEAN A. CHARLES No. C50767 Exp. 9-30-13 CIVIL STATE OF CALIFORNIA

THE STATE OF CALIFORNIA OR ITS OFFICERS OR AGENTS SHALL NOT BE RESPONSIBLE FOR THE ACCURACY OR COMPLETENESS OF SCANNED COPIES OF THIS PLAN SHEET.

WMH CORPORATION
555 12th St
Suite 1900
Oakland, CA 94607

ACTC
1333 Broadway
Suites 220 & 300
Oakland, CA 94612

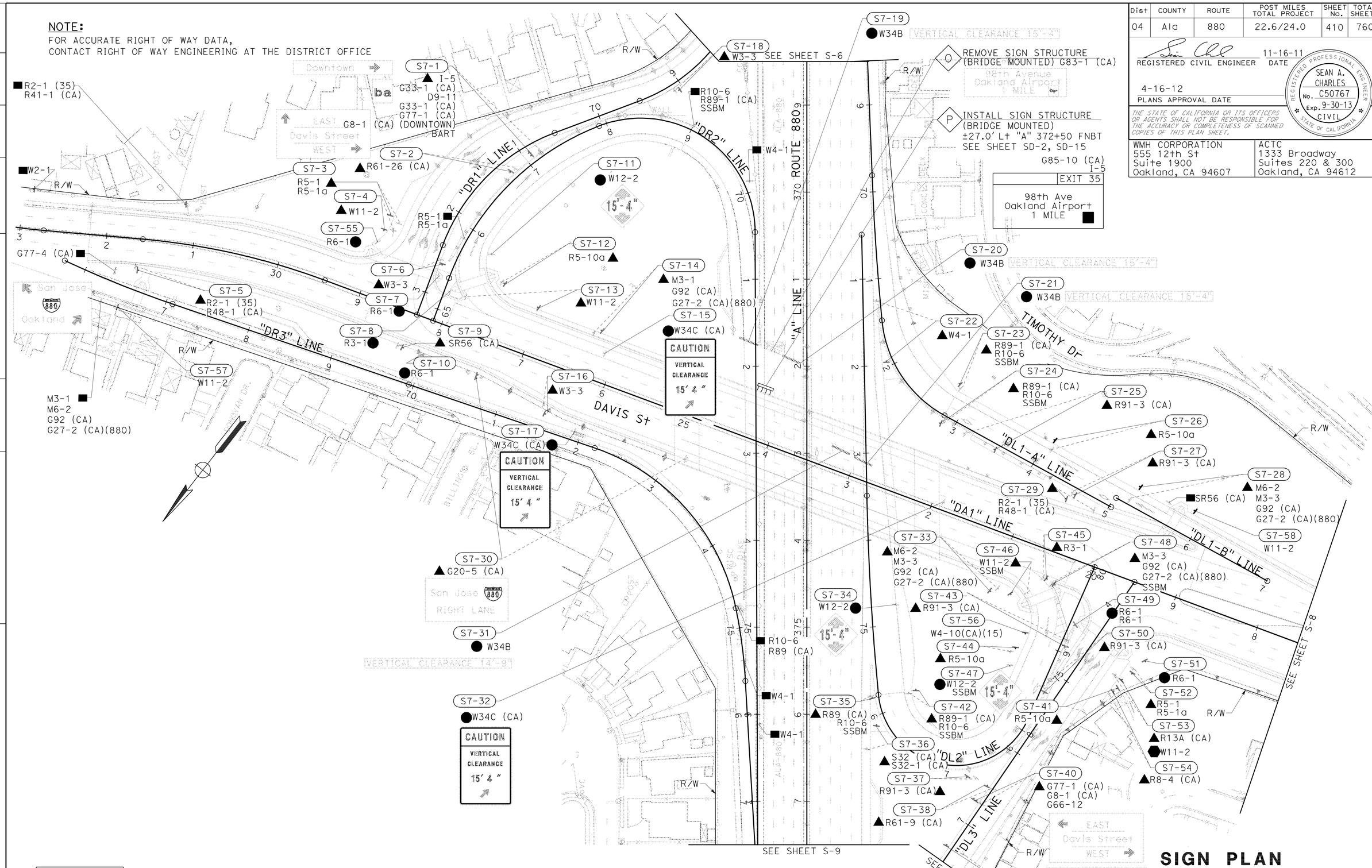

FOR LEGENDS, SEE SHEET S-1

SIGN PLAN

SCALE: 1" = 50'

S-7

APPROVED FOR SIGN WORK ONLY

HAC	5/18/11		
HAC	4/13/11		
LMH	8/5/10		
REVISED BY	DATE REVISED		
HEATHER A. CHARLES	SEAN A. CHARLES	CALCULATED-DESIGNED BY	CHECKED BY
TIMOTHY J. LEE		CONSULTANT FUNCTIONAL SUPERVISOR	

STATE OF CALIFORNIA - DEPARTMENT OF TRANSPORTATION

Caltrans

X:\880_Marina-Davis\000_CAD\Sheets\0000_Final PSE-Elec CADD Submittal\Final_Submittal_20111227\880MDRefMerge_20111226\EA04-3g921_CADD-SUBMITTAL_20111227\43a921oa007.dgn

LAST REVISION 11-16-11 | DATE PLOTTED => 19-APR-2012 | TIME PLOTTED => 18:54

Dist	COUNTY	ROUTE	POST MILES TOTAL PROJECT	SHEET No.	TOTAL SHEETS
04	Ala	880	22.6/24.0	411	760

REGISTERED CIVIL ENGINEER 11-16-11 DATE

4-16-12
PLANS APPROVAL DATE

REGISTERED PROFESSIONAL ENGINEER SEAN A. CHARLES No. C50767 Exp. 9-30-13 CIVIL STATE OF CALIFORNIA

THE STATE OF CALIFORNIA OR ITS OFFICERS OR AGENTS SHALL NOT BE RESPONSIBLE FOR THE ACCURACY OR COMPLETENESS OF SCANNED COPIES OF THIS PLAN SHEET.

WMH CORPORATION
555 12th St
Suite 1900
Oakland, CA 94607

ACTC
1333 Broadway
Suites 220 & 300
Oakland, CA 94612

NOTE:
FOR ACCURATE RIGHT OF WAY DATA,
CONTACT RIGHT OF WAY ENGINEERING AT THE DISTRICT OFFICE.

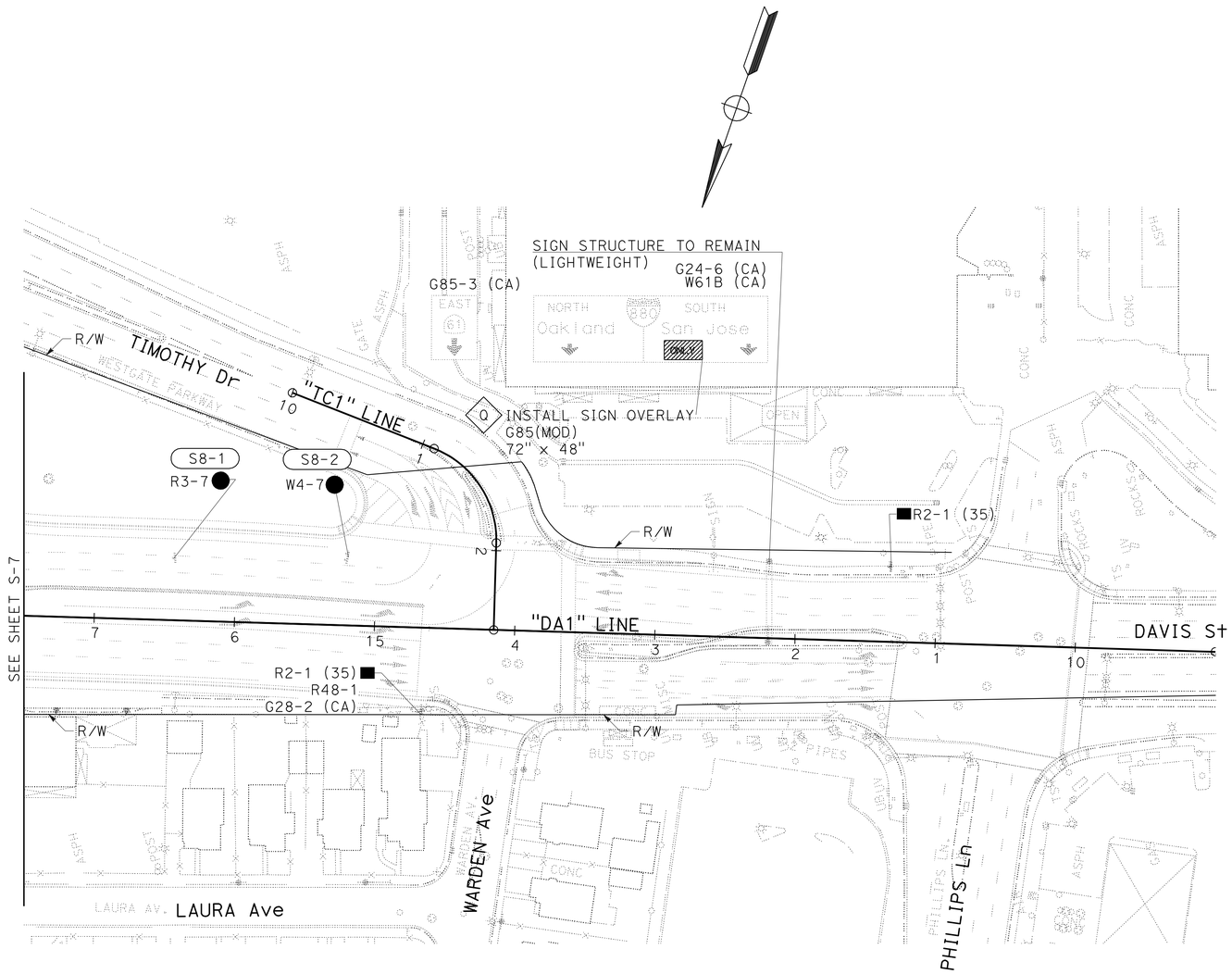

FOR LEGENDS,
SEE SHEET S-1

SIGN PLAN

SCALE: 1" = 50'

S-8

APPROVED FOR SIGN WORK ONLY

STATE OF CALIFORNIA - DEPARTMENT OF TRANSPORTATION

Caltrans

CONSULTANT FUNCTIONAL SUPERVISOR: TIMOTHY J. LEE

CALCULATED-DESIGNED BY: HEATHER A. CHARLES

CHECKED BY: SEAN A. CHARLES

REVISED BY	DATE REVISED
LMH	8/5/10
HAC	4/13/11
HAC	5/18/11

X:\880_Marina-Davis\000_CAD\Sheets\0000_Final\PSE-Elec\ADDSubmittal\Final_Submittal_20111227\880MDReMerge_20111226\EA04-3g9211_CADD-SUBMITTAL_20111227\43g921oa008.dgn

LAST REVISION 11-16-11 | DATE PLOTTED => 25-APR-2012 | TIME PLOTTED => 11:38

Dist	COUNTY	ROUTE	POST MILES TOTAL PROJECT	SHEET No.	TOTAL SHEETS
04	Ala	880	22.6/24.0	412	760

REGISTERED CIVIL ENGINEER 11-16-11 DATE

4-16-12
PLANS APPROVAL DATE

REGISTERED PROFESSIONAL ENGINEER SEAN A. CHARLES No. C50767 Exp. 9-30-13 CIVIL STATE OF CALIFORNIA

THE STATE OF CALIFORNIA OR ITS OFFICERS OR AGENTS SHALL NOT BE RESPONSIBLE FOR THE ACCURACY OR COMPLETENESS OF SCANNED COPIES OF THIS PLAN SHEET.

WMH CORPORATION
555 12th St
Suite 1900
Oakland, CA 94607

ACTC
1333 Broadway
Suites 220 & 300
Oakland, CA 94612

NOTE:
FOR ACCURATE RIGHT OF WAY DATA,
CONTACT RIGHT OF WAY ENGINEERING AT THE DISTRICT OFFICE

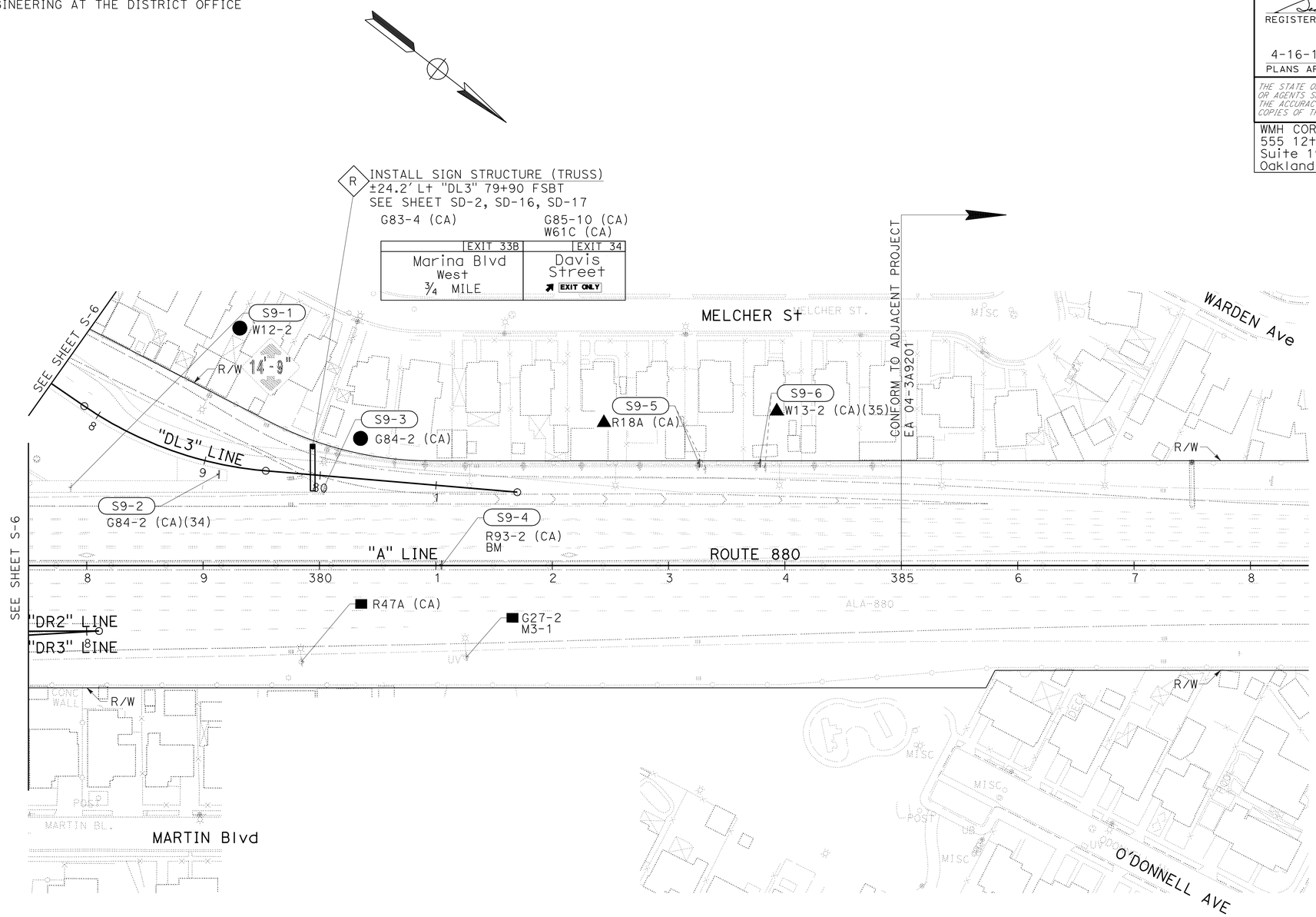

FOR LEGENDS,
SEE SHEET S-1

SIGN PLAN

SCALE: 1" = 50'

S-9

APPROVED FOR SIGN WORK ONLY

STATE OF CALIFORNIA - DEPARTMENT OF TRANSPORTATION
Caltrans

CONSULTANT FUNCTIONAL SUPERVISOR: TIMOTHY J. LEE
CALCULATED-DESIGNED BY: HEATHER A. CHARLES
CHECKED BY: SEAN A. CHARLES

REVISED BY	DATE REVISED
LMH	8/5/10
HAC	4/13/11
HAC	5/18/11

X:\880_Marina-Davis\000_CAD\Sheets\0000_Final PSE-Elec CADD Submittal\Final_Submittal_20111227\880MDRefMerge_20111226\EA04-3a9211_CADD-SUBMITTAL_20111227\43a9210a009.dgn

LAST REVISION 11-16-11
DATE PLOTTED => 19-APR-2012
TIME PLOTTED => 18:55

Dist	COUNTY	ROUTE	POST MILES TOTAL PROJECT	SHEET No.	TOTAL SHEETS
04	Ala	880	22.6/24.0	413	760

REGISTERED CIVIL ENGINEER 11-16-11 DATE

4-16-12
PLANS APPROVAL DATE

REGISTERED PROFESSIONAL ENGINEER SEAN A. CHARLES No. C50767 Exp. 9-30-13 CIVIL STATE OF CALIFORNIA

THE STATE OF CALIFORNIA OR ITS OFFICERS OR AGENTS SHALL NOT BE RESPONSIBLE FOR THE ACCURACY OR COMPLETENESS OF SCANNED COPIES OF THIS PLAN SHEET.

WMH CORPORATION
555 12th St
Suite 1900
Oakland, CA 94607

ACTC
1333 Broadway
Suites 220 & 300
Oakland, CA 94612

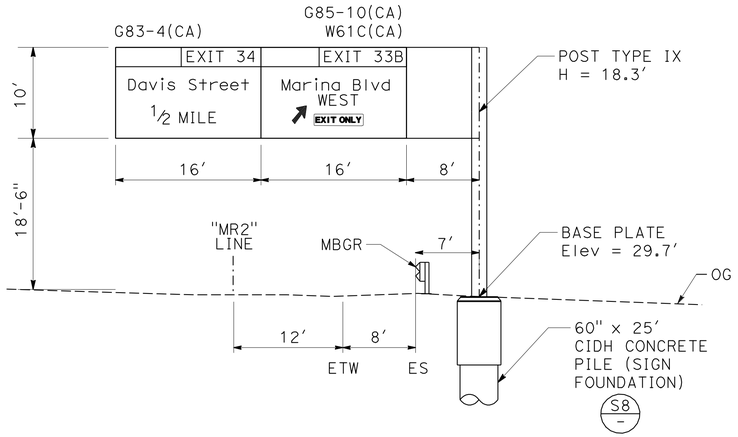

C INSTALL SIGN STRUCTURE (TRUSS)

± 27.0' Rt "MR2" 27+15 (FNBT)

S-2
PANEL DETAILS SD-6, SD-7

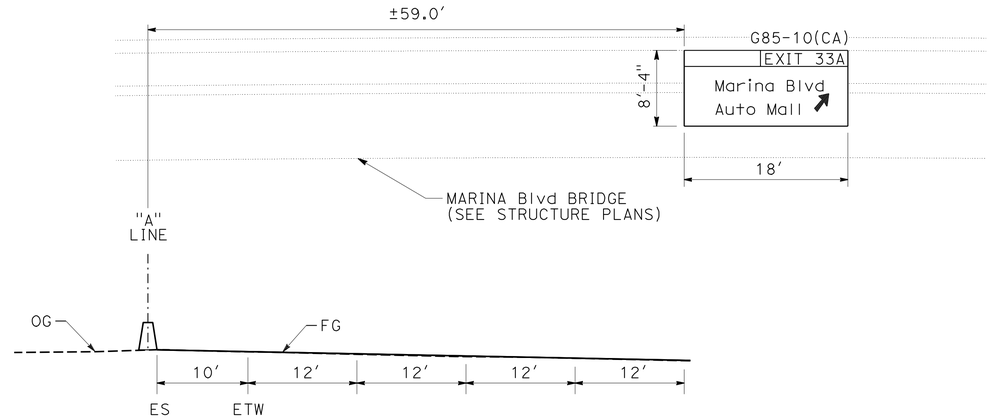

H INSTALL SIGN STRUCTURE (BRIDGE MOUNTED)

± 59.0' Lt "A" 331+10 (FSBT)

S-2
PANEL DETAILS SD-9

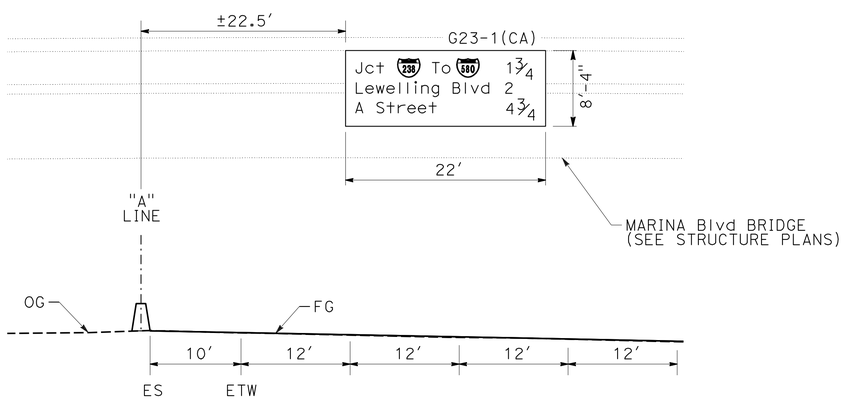

F INSTALL SIGN STRUCTURE (BRIDGE MOUNTED)

± 22.5' Lt "A" 330+90 (FSBT)

S-2
PANEL DETAILS SD-8

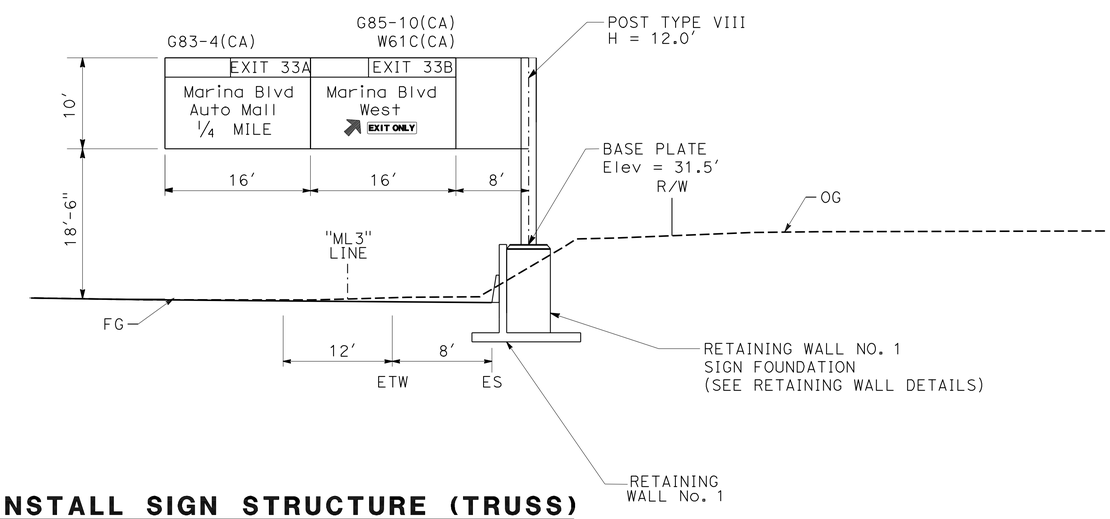

I INSTALL SIGN STRUCTURE (TRUSS)

± 107.5' Lt "A" 340+00 (FSBT)

S-4
PANEL DETAILS SD-10, SD-11

SIGN DETAILS

NO SCALE

SD-1

	HAC	JJC	HAC	HEATHER A. CHARLES	CALCULATED-DESIGNED BY
REVISED BY	4/20/11	8/5/10	4/8/10	SEAN A. CHARLES	CHECKED BY
DATE REVISED				TIMOTHY J. LEE	CONSULTANT FUNCTIONAL SUPERVISOR

STATE OF CALIFORNIA - DEPARTMENT OF TRANSPORTATION
Caltrans

X:\880_Marina-Davis\000_CAD\Sheets\0000_Final\PSE-Elec\ADDSubmittal\Final_Submittal_20111227\880MDReMerge_20111226\EA04-3g9211_CADD-SUBMITTAL_20111227\43g921ob001.dgn

LAST REVISION 11-16-11 DATE PLOTTED => 19-APR-2012 TIME PLOTTED => 18:55

Dist	COUNTY	ROUTE	POST MILES TOTAL PROJECT	SHEET No.	TOTAL SHEETS
04	Ala	880	22.6/24.0	414	760

REGISTERED CIVIL ENGINEER 11-16-11 DATE

4-16-12
PLANS APPROVAL DATE

REGISTERED PROFESSIONAL ENGINEER SEAN A. CHARLES No. C50767 Exp. 9-30-13 CIVIL STATE OF CALIFORNIA

THE STATE OF CALIFORNIA OR ITS OFFICERS OR AGENTS SHALL NOT BE RESPONSIBLE FOR THE ACCURACY OR COMPLETENESS OF SCANNED COPIES OF THIS PLAN SHEET.

WMH CORPORATION
555 12th St
Suite 1900
Oakland, CA 94607

ACTC
1333 Broadway
Suites 220 & 300
Oakland, CA 94612

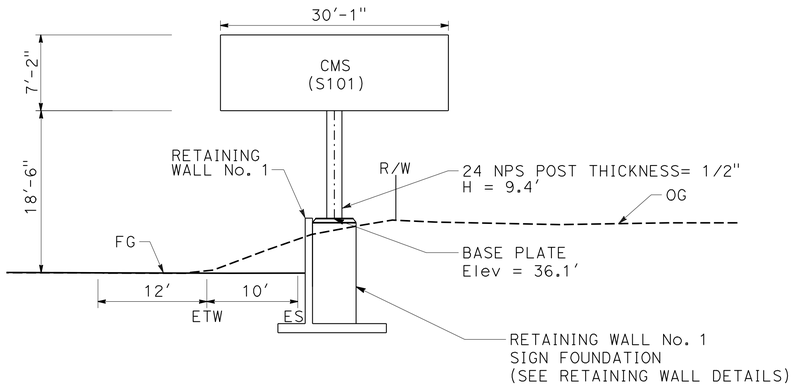

K INSTALL SIGN STRUCTURE (TRUSS)

± 97.4' Lt "A" 346+20 (FSBT)

S-4
SEE ELECTRICAL PLANS

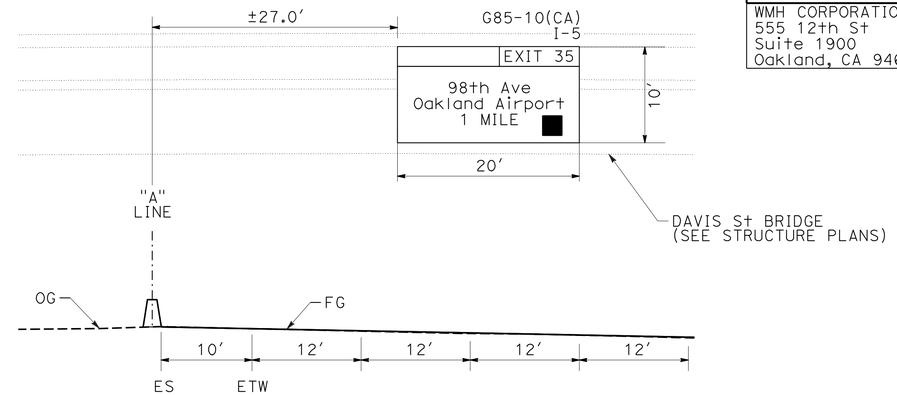

P INSTALL SIGN STRUCTURE (BRIDGE MOUNTED)

± 27.0' Lt "A" 372+50 (FNBT)

S-7
PANEL DETAILS SD-15

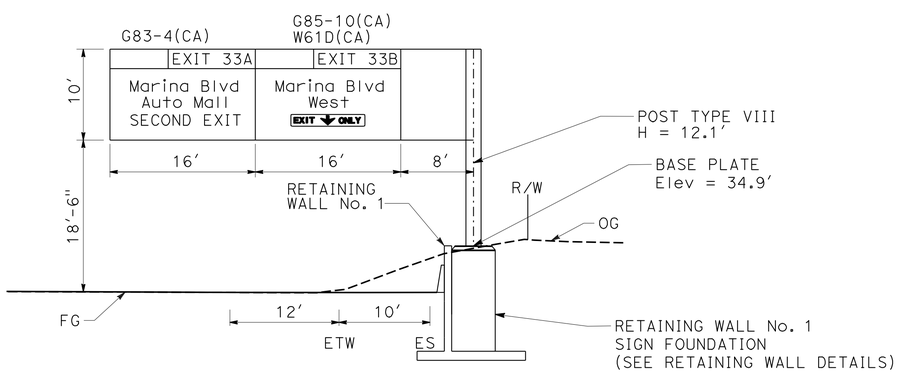

M INSTALL SIGN STRUCTURE (TRUSS)

± 96.9' Lt "A" 353+50 (FSBT)

S-5
PANEL DETAILS SD-13, SD-14

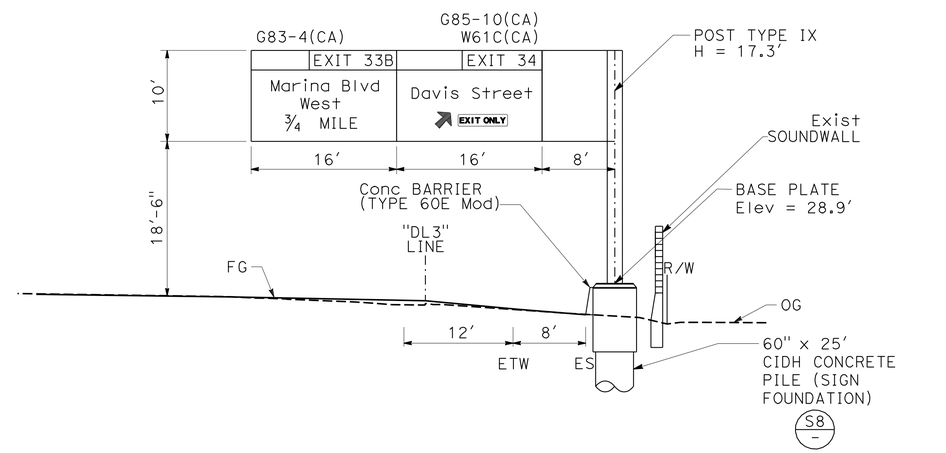

R INSTALL SIGN STRUCTURE (TRUSS)

± 24.2' Lt "DL3" 79+90 (FSBT)

S-9
PANEL DETAILS SD-16, SD-17

SIGN DETAILS

NO SCALE

SD-2

	REVISED BY	DATE REVISED	CONSULTANT FUNCTIONAL SUPERVISOR	CALCULATED-DESIGNED BY	CHECKED BY
JJC	HAC	4/20/11	TIMOTHY J. LEE	HEATHER A. CHARLES	SEAN A. CHARLES
HAC	HAC	8/5/10			
HAC	HAC	4/8/10			

STATE OF CALIFORNIA - DEPARTMENT OF TRANSPORTATION

Caltrans

X:\880_Marina-Davis\000_CAD\Sheets\0000_Final PSE-ElecCADSubmittal\Final_Submittal_20111227\880MDRefMerge_20111226\EA04-3g9211_CADD-SUBMITTAL_20111227\43g921ob002.dgn

LAST REVISION 11-16-11 | DATE PLOTTED => 19-APR-2012 | TIME PLOTTED => 18:55

Dist	COUNTY	ROUTE	POST MILES TOTAL PROJECT	SHEET No.	TOTAL SHEETS
04	Ala	880	22.6/24.0	415	760

REGISTERED CIVIL ENGINEER 11-16-11 DATE

4-16-12
PLANS APPROVAL DATE

REGISTERED PROFESSIONAL ENGINEER SEAN A. CHARLES No. C50767 Exp. 9-30-13 CIVIL STATE OF CALIFORNIA

THE STATE OF CALIFORNIA OR ITS OFFICERS OR AGENTS SHALL NOT BE RESPONSIBLE FOR THE ACCURACY OR COMPLETENESS OF SCANNED COPIES OF THIS PLAN SHEET.

WMH CORPORATION
555 12th St
Suite 1900
Oakland, CA 94607

ACTC
1333 Broadway
Suites 220 & 300
Oakland, CA 94612

NOTES:

1. SIGN PANEL SHALL BE ROTATED SUCH THAT IT DOES NOT ENCROACH ONTO THE SHOULDER NOR OUTSIDE OF THE RIGHT OF WAY.
2. FOR DOUBLE PANEL SIGNS (S25-2 AND S25-5), MOUNT LOWER SIGN WITH TYPICAL CLEARANCE AND UPPER SIGN 3" ABOVE TOP OF LOWER SIGN.
3. ANGLE BRACKET TO MATCH BARRIER.

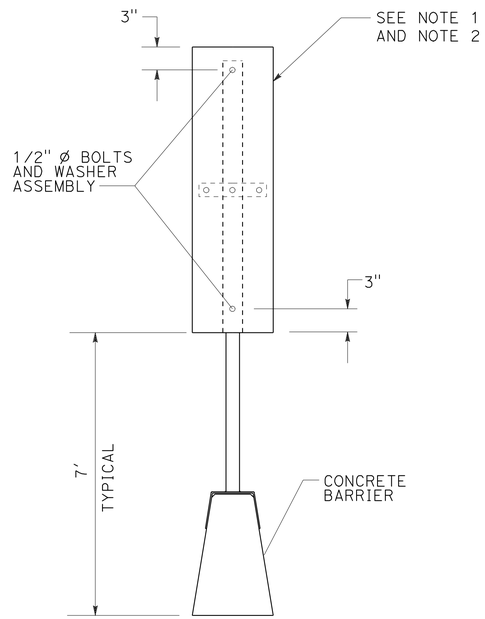

SECTION

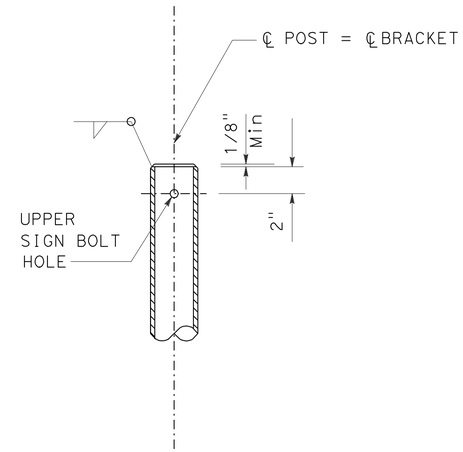

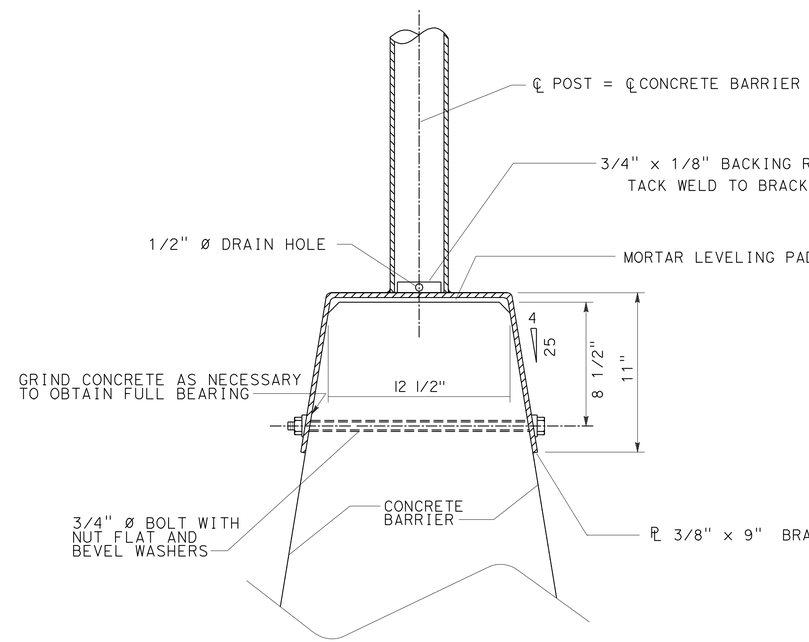

SECTION A-A

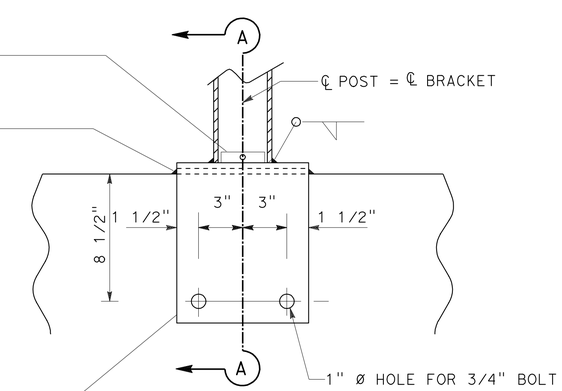

ELEVATION

BASE PLATE, ANCHORAGE & TOP OF POST DETAILS

BARRIER MOUNTED SIGN

SIGN DETAILS

NO SCALE

SD-3

STATE OF CALIFORNIA - DEPARTMENT OF TRANSPORTATION

Caltrans

CONSULTANT FUNCTIONAL SUPERVISOR: TIMOTHY J. LEE

CALCULATED-DESIGNED BY: JOSEPH J. COOPER

CHECKED BY: SEAN A. CHARLES

REVISED BY: JC, JJC, HC

DATE REVISED: 4/8/10, 8/5/10, 4/20/11

X:\880_Marina-Davis\000_CAD\Sheets\0000_Final PSE-Elec CADD Submittal\Final_Submittal_20111227\880MDRefMerge_20111226\EA04-3g9211_CADD-SUBMITTAL_20111227\43g921ob003.dgn

LAST REVISION 11-16-11 | DATE PLOTTED => 19-APR-2012 | TIME PLOTTED => 18:55

Dist	COUNTY	ROUTE	POST MILES TOTAL PROJECT	SHEET No.	TOTAL SHEETS
04	Ala	880	22.6/24.0	416	760

REGISTERED CIVIL ENGINEER 11-16-11 DATE

4-16-12
PLANS APPROVAL DATE

REGISTERED PROFESSIONAL ENGINEER SEAN A. CHARLES No. C50767 Exp. 9-30-13 CIVIL STATE OF CALIFORNIA

THE STATE OF CALIFORNIA OR ITS OFFICERS OR AGENTS SHALL NOT BE RESPONSIBLE FOR THE ACCURACY OR COMPLETENESS OF SCANNED COPIES OF THIS PLAN SHEET.

WMH CORPORATION
555 12th St
Suite 1900
Oakland, CA 94607

ACTC
1333 Broadway
Suites 220 & 300
Oakland, CA 94612

NOTE:
ALL DIMENSIONS ARE IN INCHES UNLESS OTHERWISE NOTED.

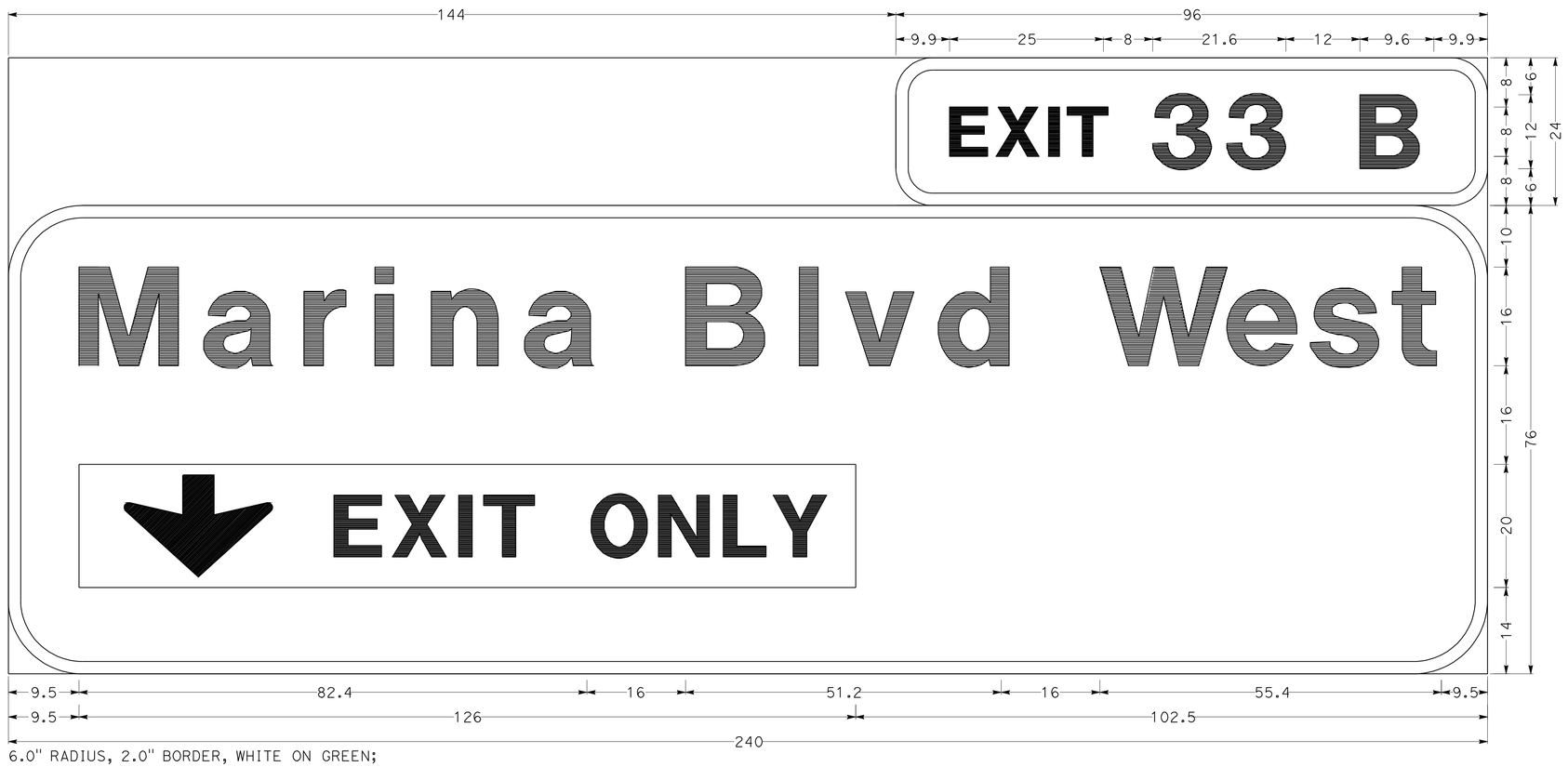

6.0" RADIUS, 2.0" BORDER, WHITE ON GREEN;
[EXIT 33 B] E;
12.0" RADIUS, 2.0" BORDER, WHITE ON GREEN;
[MARINA Blvd WEST] E Mod; RECTANGLE YELLOW;

OVERHEAD SIGN (B) ON SHEET S-1

SIGN DETAILS
NO SCALE
SD-4

JJC	8/5/10	JOSEPH J. COOPER	CALCULATED-DESIGNED BY
JC	4/8/10	SEAN A. CHARLES	CHECKED BY
JC	12/14/09	TIMOTHY J. LEE	CONSULTANT FUNCTIONAL SUPERVISOR
REVISED BY	DATE REVISED		

STATE OF CALIFORNIA - DEPARTMENT OF TRANSPORTATION
Caltrans

X:\880_Marina-Davis\000_CAD\Sheets\0000_Final\PSE-ElecCADSubmittal\Final_Submittal_20111227\880MDRefMerge_20111226\EA04-3g9211_CADD-SUBMITTAL_20111227\43a921ob004.dgn

LAST REVISION 11-16-11 | DATE PLOTTED => 19-APR-2012 | TIME PLOTTED => 18:55

Dist	COUNTY	ROUTE	POST MILES TOTAL PROJECT	SHEET No.	TOTAL SHEETS
04	Ala	880	22.6/24.0	417	760

REGISTERED CIVIL ENGINEER 11-16-11 DATE

4-16-12
PLANS APPROVAL DATE

REGISTERED PROFESSIONAL ENGINEER SEAN A. CHARLES No. C50767 Exp. 9-30-13 CIVIL STATE OF CALIFORNIA

THE STATE OF CALIFORNIA OR ITS OFFICERS OR AGENTS SHALL NOT BE RESPONSIBLE FOR THE ACCURACY OR COMPLETENESS OF SCANNED COPIES OF THIS PLAN SHEET.

WMH CORPORATION
555 12th St
Suite 1900
Oakland, CA 94607

ACTC
1333 Broadway
Suites 220 & 300
Oakland, CA 94612

NOTE:
ALL DIMENSIONS ARE IN INCHES UNLESS OTHERWISE NOTED.

6.0" RADIUS, 2.0" BORDER, WHITE ON GREEN;
[EXIT 33 A] E;
12.0" RADIUS, 2.0" BORDER, WHITE ON GREEN;
[MARINA Blvd] E Mod; [AUTO MALL] E Mod; ARROW 16CAP-2LV - 35.6" 60° BLACK

OVERHEAD SIGN (B) ON SHEET S-1

SIGN DETAILS
NO SCALE
SD-5

JJC	8/5/10
JC	4/8/10
JC	12/14/09
REVISED BY	DATE REVISED
JOSEPH J. COOPER	
SEAN A. CHARLES	
CALCULATED-DESIGNED BY	
CHECKED BY	
TIMOTHY J. LEE	
CONSULTANT FUNCTIONAL SUPERVISOR	

STATE OF CALIFORNIA - DEPARTMENT OF TRANSPORTATION
Caltrans

X:\880_Marina-Davis\000_CAD\Sheets\0000_Final\PSE-Elec\CADDSubmittal\Final_Submittal_20111227\880MDRefMerge_20111226\EA04-3g921_CADD-SUBMITTAL_20111227\43g921ob005.dgn

LAST REVISION 11-16-11
DATE PLOTTED => 19-APR-2012
TIME PLOTTED => 18:55

Dist	COUNTY	ROUTE	POST MILES TOTAL PROJECT	SHEET No.	TOTAL SHEETS
04	Ala	880	22.6/24.0	418	760

REGISTERED CIVIL ENGINEER 11-16-11 DATE

4-16-12
PLANS APPROVAL DATE

REGISTERED PROFESSIONAL ENGINEER SEAN A. CHARLES No. C50767 Exp. 9-30-13 CIVIL STATE OF CALIFORNIA

THE STATE OF CALIFORNIA OR ITS OFFICERS OR AGENTS SHALL NOT BE RESPONSIBLE FOR THE ACCURACY OR COMPLETENESS OF SCANNED COPIES OF THIS PLAN SHEET.

WMH CORPORATION
555 12th St
Suite 1900
Oakland, CA 94607

ACTC
1333 Broadway
Suites 220 & 300
Oakland, CA 94612

NOTE:
ALL DIMENSIONS ARE IN INCHES UNLESS OTHERWISE NOTED.

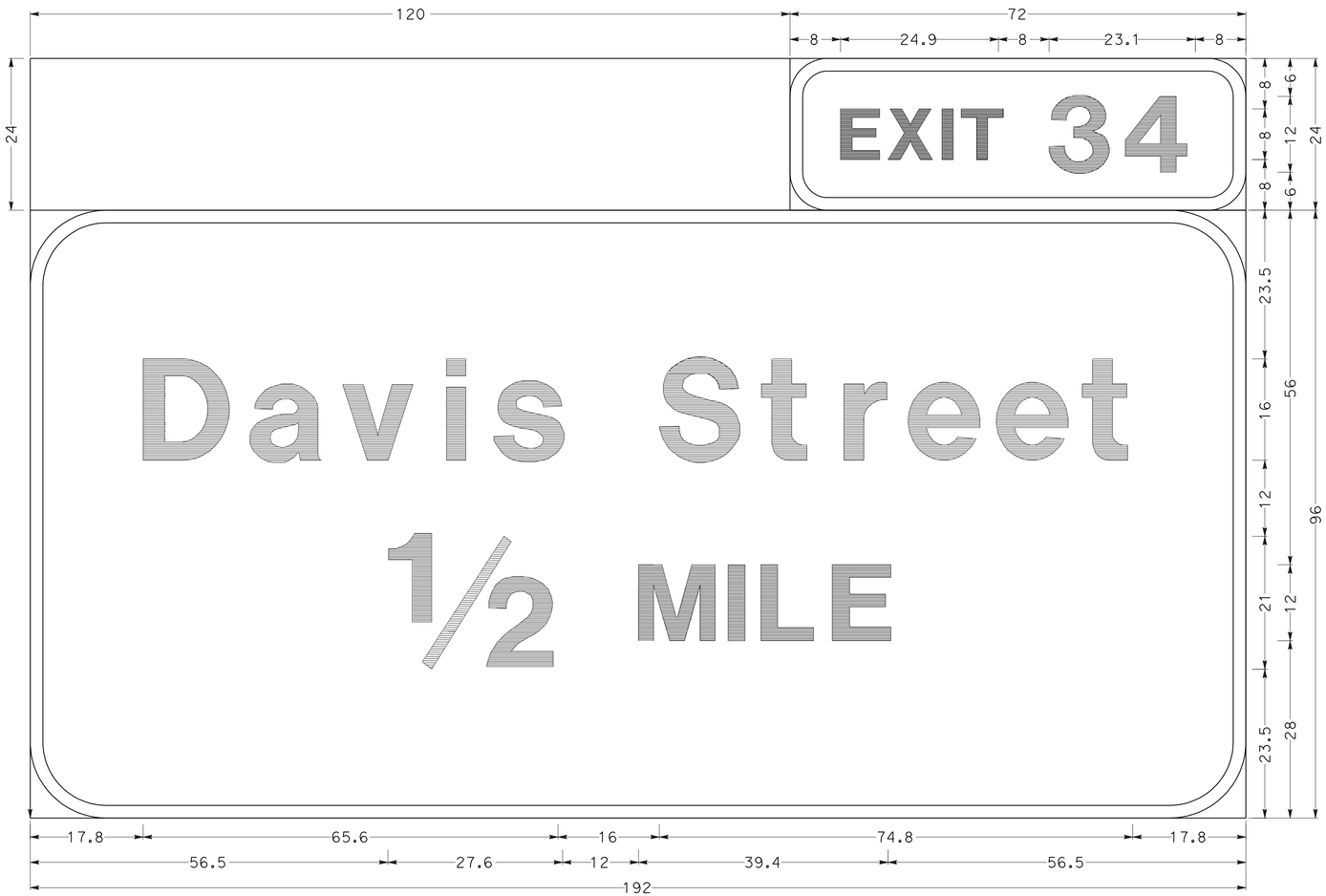

6.0" Radius, 2.0" Border, White on Green;
[EXIT 34] E;
12.0" Radius, 2.0" Border, White on Green;
[Davis Street] E Mod; [5/64] E [ ] E Mod [MILE] E;

OVERHEAD SIGN (C) ON SHEET S-2, SD-1

SIGN DETAILS
NO SCALE

SD-6

JJC	8/5/10		
JC	4/8/10		
JC	12/14/09	REVISED BY	DATE REVISED
JOSEPH J. COOPER		CALCULATED-DESIGNED BY	
SEAN A. CHARLES		CHECKED BY	
TIMOTHY J. LEE		CONSULTANT FUNCTIONAL SUPERVISOR	

STATE OF CALIFORNIA - DEPARTMENT OF TRANSPORTATION
Caltrans

X:\880_Marina-Davis\0000_CAD\Sheets\0000_FinalPSE-ElecCADDSubmittal\Final_Submittal_20111227\880MDRefMerge_20111226\EA04-3g9211_CADD-SUBMITTAL_20111227\43g921ob006.dgn

LAST REVISION 11-16-11 DATE PLOTTED => 19-APR-2012 TIME PLOTTED => 18:55

Dist	COUNTY	ROUTE	POST MILES TOTAL PROJECT	SHEET No.	TOTAL SHEETS
04	Ala	880	22.6/24.0	419	760

REGISTERED CIVIL ENGINEER 11-16-11 DATE

4-16-12
PLANS APPROVAL DATE

REGISTERED PROFESSIONAL ENGINEER SEAN A. CHARLES No. C50767 Exp. 9-30-13 CIVIL STATE OF CALIFORNIA

THE STATE OF CALIFORNIA OR ITS OFFICERS OR AGENTS SHALL NOT BE RESPONSIBLE FOR THE ACCURACY OR COMPLETENESS OF SCANNED COPIES OF THIS PLAN SHEET.

WMH CORPORATION
555 12th St
Suite 1900
Oakland, CA 94607

ACTC
1333 Broadway
Suites 220 & 300
Oakland, CA 94612

NOTE:
ALL DIMENSIONS ARE IN INCHES UNLESS OTHERWISE NOTED.

6.0" RADIUS, 2.0" BORDER, WHITE ON GREEN;
[EXIT 33 B] E;
12.0" RADIUS, 2.0" BORDER, WHITE ON GREEN;
[MARINA Blvd] E Mod; [WEST] E Mod; ARROW 16CAP-2LH - 25.0" 60°; RECTANGLE YELLOW;

SIGN (C) ON SHEET S-2, SD-1

SIGN DETAILS
NO SCALE

SD-7

JJC	8/5/10		
JC	4/8/10		
JC	12/14/09	REVISED BY	DATE REVISED
JOSEPH J. COOPER		CALCULATED-DESIGNED BY	
SEAN A. CHARLES		CHECKED BY	
TIMOTHY J. LEE		CONSULTANT FUNCTIONAL SUPERVISOR	

STATE OF CALIFORNIA - DEPARTMENT OF TRANSPORTATION
Caltrans

X:\880_Marina-Davis\000_CAD\Sheets\0000_Final PSE-E1 eecADDSubmittal\Final_Submittal_20111227\880MDRefMerge_20111226\EA04-3g9211_CADD-SUBMITTAL_20111227\43a921ob007.dgn

LAST REVISION 11-16-11 | DATE PLOTTED => 19-APR-2012 | TIME PLOTTED => 18:55

Dist	COUNTY	ROUTE	POST MILES TOTAL PROJECT	SHEET No.	TOTAL SHEETS
04	Ala	880	22.6/24.0	420	760

REGISTERED CIVIL ENGINEER 11-16-11 DATE

4-16-12
PLANS APPROVAL DATE

REGISTERED PROFESSIONAL ENGINEER SEAN A. CHARLES No. C50767 Exp. 9-30-13 CIVIL STATE OF CALIFORNIA

THE STATE OF CALIFORNIA OR ITS OFFICERS OR AGENTS SHALL NOT BE RESPONSIBLE FOR THE ACCURACY OR COMPLETENESS OF SCANNED COPIES OF THIS PLAN SHEET.

WMH CORPORATION
555 12th St
Suite 1900
Oakland, CA 94607

ACTC
1333 Broadway
Suites 220 & 300
Oakland, CA 94612

NOTE:
ALL DIMENSIONS ARE IN INCHES UNLESS OTHERWISE NOTED.

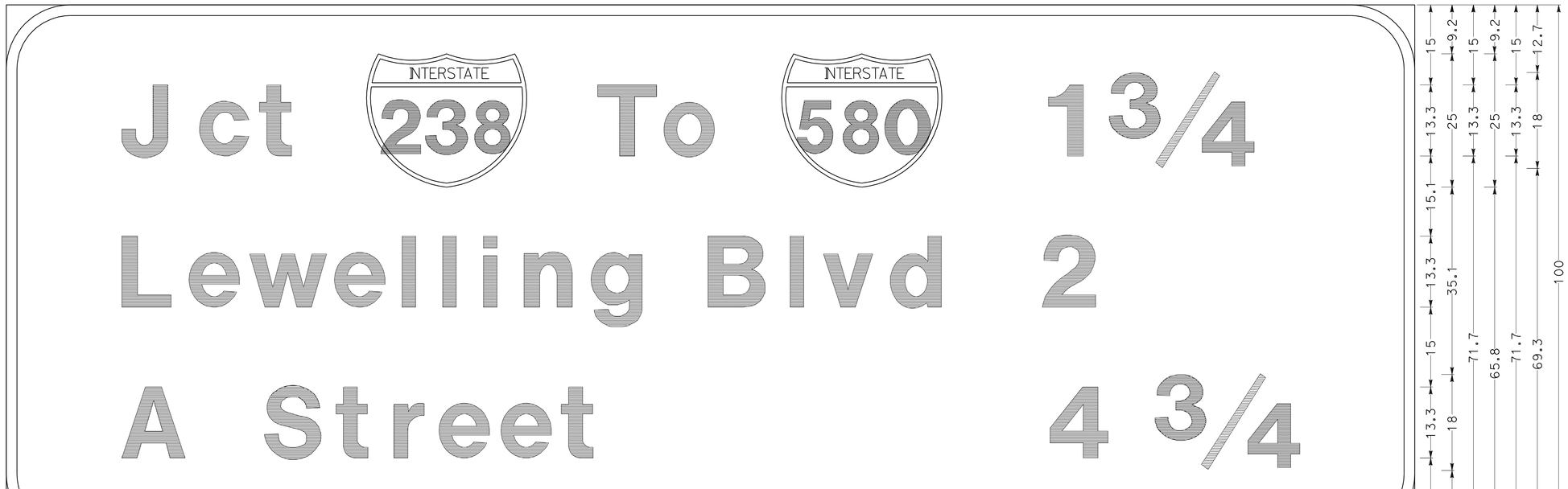

12.0" Radius, 2.0" Border, White on Green;
[Jct] E Mod; [To] E Mod; [1] E Mod [6/64] E [ ] E Mod; [Lewelling Blvd] E Mod; [2] E Mod; [A Street] E Mod; [4] E Mod [6/64] E [ ] E Mod;

OVERHEAD SIGN (F) ON SHEET S-2, SD-1

SIGN DETAILS
NO SCALE

SD-8

STATE OF CALIFORNIA - DEPARTMENT OF TRANSPORTATION
Caltrans

JOSEPH J. COOPER	REVISED BY	JC	JC	JC	JJC
SEAN A. CHARLES	DATE REVISED	12/14/09	4/8/10	8/5/10

CALCULATED-DESIGNED BY
CHECKED BY
SUPERVISOR
TIMOTHY J. LEE
CONSULTANT FUNCTIONAL SUPERVISOR

X:\880_Marina-Davis\000_CAD\Sheets\0000_Final PSE-ElecCADSubmittal\Final_Submittal_20111227\880MDRefMerge_20111226\EA04-3g9211_CADD-SUBMITTAL_20111227\43g921ob008.dgn

LAST REVISION 11-16-11
DATE PLOTTED => 19-APR-2012
TIME PLOTTED => 18:55

Dist	COUNTY	ROUTE	POST MILES TOTAL PROJECT	SHEET No.	TOTAL SHEETS
04	Ala	880	22.6/24.0	421	760

REGISTERED CIVIL ENGINEER 11-16-11 DATE

4-16-12
PLANS APPROVAL DATE

REGISTERED PROFESSIONAL ENGINEER SEAN A. CHARLES No. C50767 Exp. 9-30-13 CIVIL STATE OF CALIFORNIA

THE STATE OF CALIFORNIA OR ITS OFFICERS OR AGENTS SHALL NOT BE RESPONSIBLE FOR THE ACCURACY OR COMPLETENESS OF SCANNED COPIES OF THIS PLAN SHEET.

WMH CORPORATION
555 12th St
Suite 1900
Oakland, CA 94607

ACTC
1333 Broadway
Suites 220 & 300
Oakland, CA 94612

NOTE:
ALL DIMENSIONS ARE IN INCHES UNLESS OTHERWISE NOTED.

6.0" RADIUS, 2.0" BORDER, WHITE ON GREEN;
[EXIT 33 A] E;
12.0" RADIUS, 2.0" BORDER, WHITE ON GREEN;
[MARINA Blvd] E Mod; [AUTO MALL] E Mod; ARROW 16CAP-2LV - 35.6" 60°;

OVERHEAD SIGN (H) ON SHEET S-2, SD-1

SIGN DETAILS
NO SCALE

SD-9

JJC	8/5/10		
JC	4/8/10		
JC	12/14/09	REVISED BY	JOSEPH J. COOPER
		DATE REVISED	SEAN A. CHARLES
		CALCULATED-DESIGNED BY	
		CHECKED BY	
		CONSULTANT FUNCTIONAL SUPERVISOR	TIMOTHY J. LEE

STATE OF CALIFORNIA - DEPARTMENT OF TRANSPORTATION
Caltrans

X:\880_Marina-Davis\000_CAD\Sheets\0000_FinalPSE-ElecCADDSubmittal\Final_Submittal_20111227\880MDRefMerge_20111226\EA04-3g921_CADD-SUBMITTAL_20111227\43g921ob009.dgn

LAST REVISION 11-16-11 DATE PLOTTED => 19-APR-2012 TIME PLOTTED => 18:55

Dist	COUNTY	ROUTE	POST MILES TOTAL PROJECT	SHEET No.	TOTAL SHEETS
04	Ala	880	22.6/24.0	422	760

REGISTERED CIVIL ENGINEER 11-16-11 DATE

4-16-12
PLANS APPROVAL DATE

REGISTERED PROFESSIONAL ENGINEER SEAN A. CHARLES No. C50767 Exp. 9-30-13 CIVIL STATE OF CALIFORNIA

THE STATE OF CALIFORNIA OR ITS OFFICERS OR AGENTS SHALL NOT BE RESPONSIBLE FOR THE ACCURACY OR COMPLETENESS OF SCANNED COPIES OF THIS PLAN SHEET.

WMH CORPORATION
555 12th St
Suite 1900
Oakland, CA 94607

ACTC
1333 Broadway
Suites 220 & 300
Oakland, CA 94612

NOTE:

ALL DIMENSIONS ARE IN INCHES UNLESS OTHERWISE NOTED.

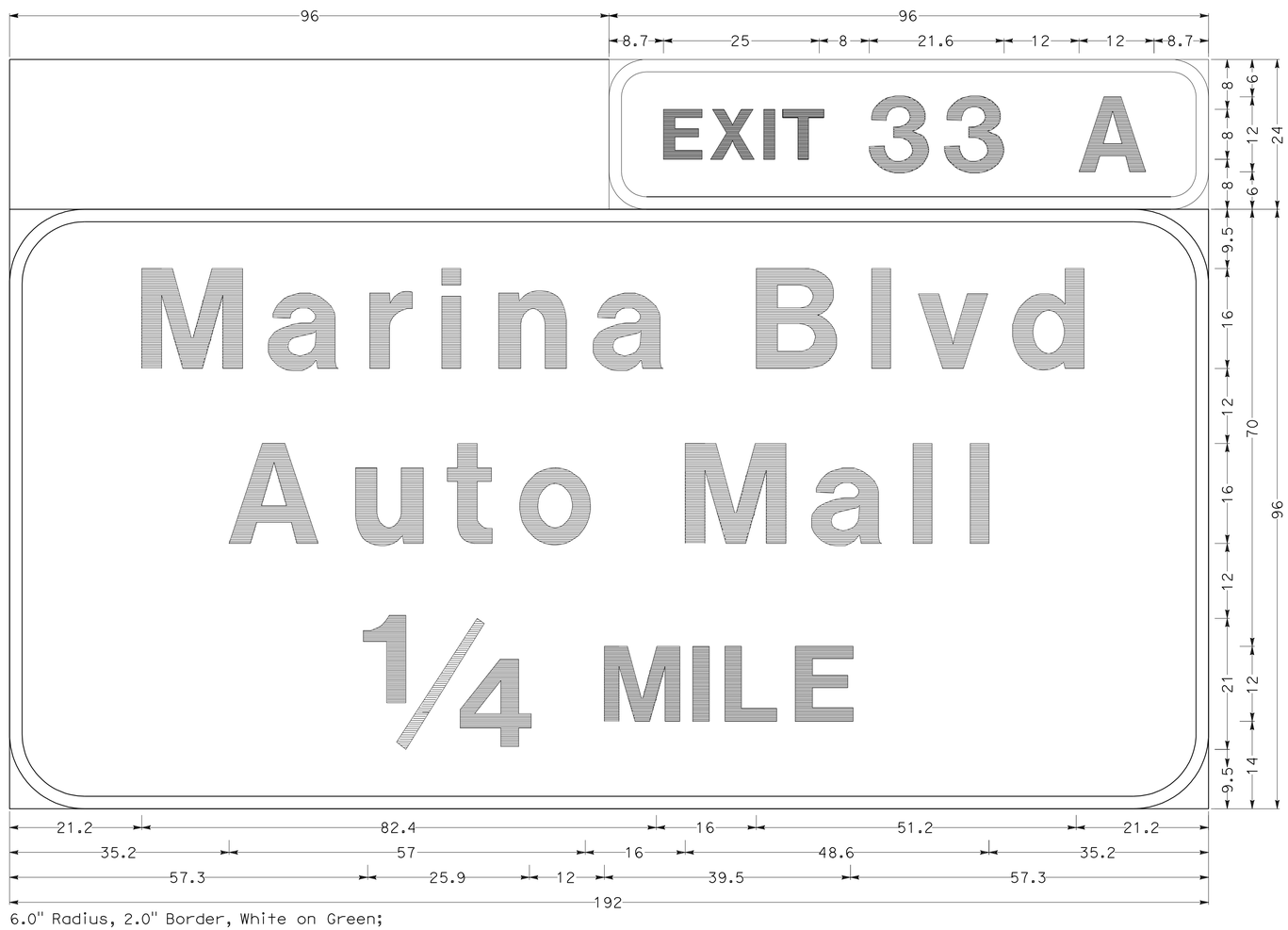

6.0" Radius, 2.0" Border, White on Green;
[EXIT 33 A] E;
12.0" Radius, 2.0" Border, White on Green;
[Marina Blvd] E Mod; [Auto Mall] E Mod; [57/64] E [ ] E Mod [MILE] E;

OVERHEAD SIGN (I) ON SHEET S-4, SD-1

SIGN DETAILS

NO SCALE

SD-10

STATE OF CALIFORNIA - DEPARTMENT OF TRANSPORTATION

Caltrans

CONSULTANT FUNCTIONAL SUPERVISOR	CALCULATED-DESIGNED BY	REVISED BY	DATE REVISED
TIMOTHY J. LEE	JOSEPH J. COOPER	JC	12/14/09
	SEAN A. CHARLES	JC	4/8/10
	CHECKED BY	JJC	8/5/10

X:\880_Marina-Davis\000_CAD\Sheets\0000_Final\PSE-Elec\ADDSubmittal\Final_Submittal_20111227\880MDRefMerge_20111226\EA04-3g9211_CADD-SUBMITTAL_20111227\43g921ob010.dgn

LAST REVISION 11-16-11 | DATE PLOTTED => 19-APR-2012 | TIME PLOTTED => 18:55

Dist	COUNTY	ROUTE	POST MILES TOTAL PROJECT	SHEET No.	TOTAL SHEETS
04	Ala	880	22.6/24.0	423	760

REGISTERED CIVIL ENGINEER 11-16-11 DATE

4-16-12
PLANS APPROVAL DATE

REGISTERED PROFESSIONAL ENGINEER SEAN A. CHARLES No. C50767 Exp. 9-30-13 CIVIL STATE OF CALIFORNIA

THE STATE OF CALIFORNIA OR ITS OFFICERS OR AGENTS SHALL NOT BE RESPONSIBLE FOR THE ACCURACY OR COMPLETENESS OF SCANNED COPIES OF THIS PLAN SHEET.

WMH CORPORATION
555 12th St
Suite 1900
Oakland, CA 94607

ACTC
1333 Broadway
Suites 220 & 300
Oakland, CA 94612

NOTE:

ALL DIMENSIONS ARE IN INCHES UNLESS OTHERWISE NOTED.

6.0" RADIUS, 2.0" BORDER, WHITE ON GREEN;
[EXIT 33 B] E;
12.0" RADIUS, 2.0" BORDER, WHITE ON GREEN
[MARINA Blvd] E Mod; [WEST] E Mod; ARROW 16CAP-2LH - 25.0" 60°; RECTANGLE YELLOW;

OVERHEAD SIGN (I) ON SHEET S-4, SD-1

SIGN DETAILS

NO SCALE

SD- 11

JJC	8/5/10		
JC	4/8/10		
JC	12/14/09	REVISED BY	DATE REVISED
JOSEPH J. COOPER		CALCULATED-DESIGNED BY	
SEAN A. CHARLES		CHECKED BY	
TIMOTHY J. LEE		CONSULTANT FUNCTIONAL SUPERVISOR	

STATE OF CALIFORNIA - DEPARTMENT OF TRANSPORTATION
Caltrans

X:\880_Marina-Davis\000_CAD\Sheets\0000_Final\PSE-ElecCADDSubmittal\Final_Submittal_20111227\880MDReMerge_20111226\EA04-3g9211_CADD-SUBMITTAL_20111227\43g921ob011.dgn

LAST REVISION 11-16-11 DATE PLOTTED => 19-APR-2012 TIME PLOTTED => 18:56

Dist	COUNTY	ROUTE	POST MILES TOTAL PROJECT	SHEET No.	TOTAL SHEETS
04	Ala	880	22.6/24.0	424	760

REGISTERED CIVIL ENGINEER 11-16-11 DATE

4-16-12
PLANS APPROVAL DATE

REGISTERED PROFESSIONAL ENGINEER SEAN A. CHARLES No. C50767 Exp. 9-30-13 CIVIL STATE OF CALIFORNIA

THE STATE OF CALIFORNIA OR ITS OFFICERS OR AGENTS SHALL NOT BE RESPONSIBLE FOR THE ACCURACY OR COMPLETENESS OF SCANNED COPIES OF THIS PLAN SHEET.

WMH CORPORATION
555 12th St
Suite 1900
Oakland, CA 94607

ACTC
1333 Broadway
Suites 220 & 300
Oakland, CA 94612

NOTE:
ALL DIMENSIONS ARE IN INCHES UNLESS OTHERWISE NOTED.

12.0" Radius, 2.0" Border, White on Green;
[Marina Blvd West] E Mod [57/64] E [ ] E Mod; [Auto Mall] E Mod; [59/64] E; [ ] E Mod; [Jct] E Mod; [To] E Mod; [2] E Mod [57/64] E [ ] E Mod;

OVERHEAD SIGN (J) ON SHEET S-4

SIGN DETAILS
NO SCALE
SD-12

JJC	8/5/10		
JC	4/8/10		
JC	12/14/09	REVISED BY	DATE REVISED
JOSEPH J. COOPER		CALCULATED-DESIGNED BY	
SEAN A. CHARLES		CHECKED BY	
TIMOTHY J. LEE		CONSULTANT FUNCTIONAL SUPERVISOR	

STATE OF CALIFORNIA - DEPARTMENT OF TRANSPORTATION
Caltrans

X:\880_Marina-Davis\000_CAD\Sheets\0000_FinalPSE-ElecCADDSubmittal\Final_Submittal_20111227\880MDRefMerge_20111226\EA04-3g9211_CADD-SUBMITTAL_20111227\43g921ob012.dgn

LAST REVISION 11-16-11 | DATE PLOTTED => 19-APR-2012 TIME PLOTTED => 18:56

Dist	COUNTY	ROUTE	POST MILES TOTAL PROJECT	SHEET No.	TOTAL SHEETS
04	Ala	880	22.6/24.0	425	760

REGISTERED CIVIL ENGINEER 11-16-11 DATE

4-16-12
PLANS APPROVAL DATE

REGISTERED PROFESSIONAL ENGINEER
SEAN A. CHARLES
No. C50767
Exp. 9-30-13
CIVIL
STATE OF CALIFORNIA

THE STATE OF CALIFORNIA OR ITS OFFICERS OR AGENTS SHALL NOT BE RESPONSIBLE FOR THE ACCURACY OR COMPLETENESS OF SCANNED COPIES OF THIS PLAN SHEET.

WMH CORPORATION
555 12th St
Suite 1900
Oakland, CA 94607

ACTC
1333 Broadway
Suites 220 & 300
Oakland, CA 94612

NOTE:
ALL DIMENSIONS ARE IN INCHES UNLESS OTHERWISE NOTED.

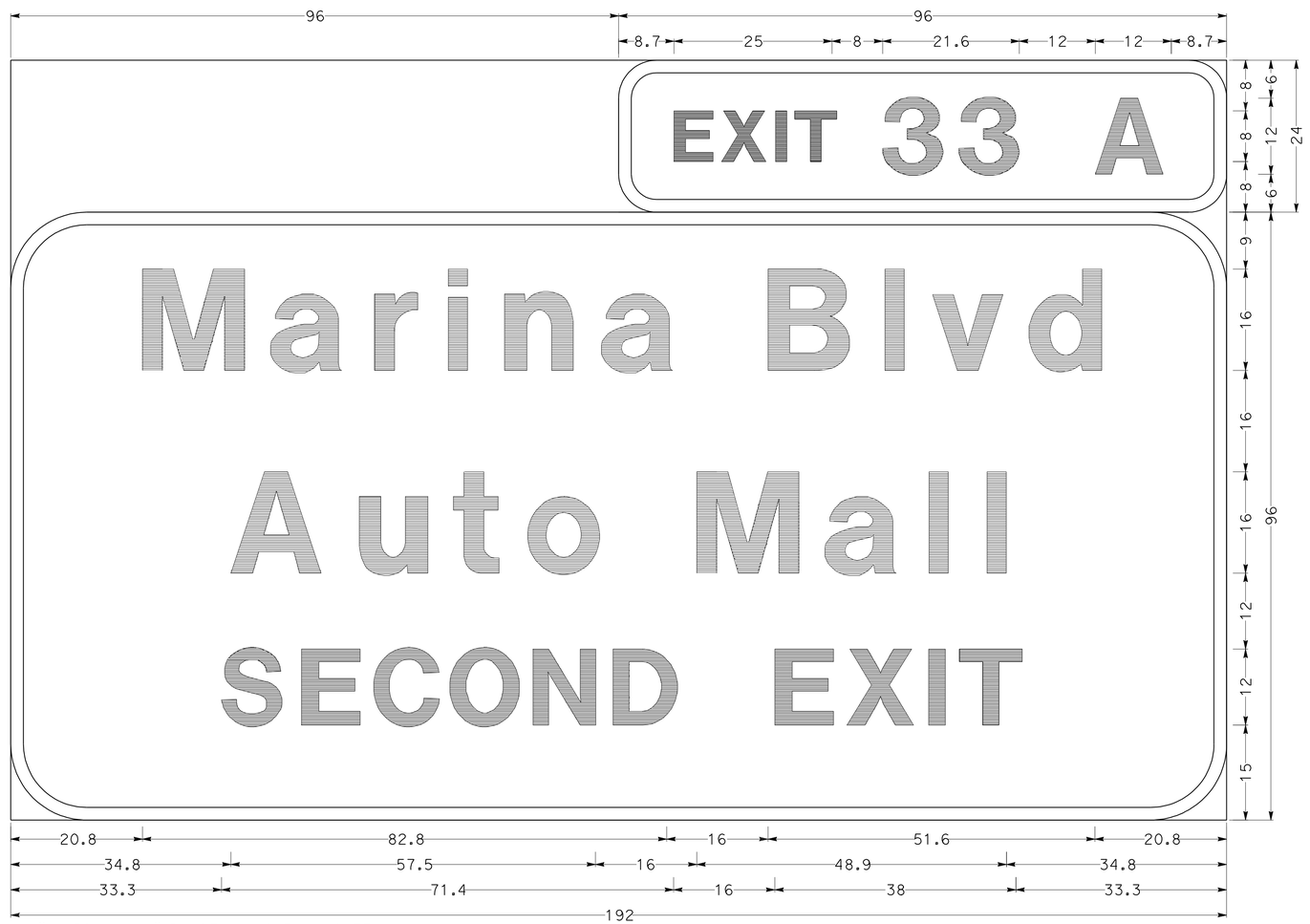

6.0" RADIUS, 2.0" BORDER, WHITE ON GREEN;
[EXIT] E [33 A] E;
12.0" RADIUS, 2.0" BORDER, WHITE ON GREEN;
[MARINA Blvd] E; [AUTO MALL] E; [SECOND EXIT] E Mod;

OVERHEAD SIGN (M) ON SHEET S-5, SD-2

SIGN DETAILS
NO SCALE

SD-13

JJC	8/5/10	
JC	4/8/10	
JC	12/14/09	
REVISED BY	DATE REVISED	

JOSEPH J. COOPER — CALCULATED-DESIGNED BY
SEAN A. CHARLES — CHECKED BY
TIMOTHY J. LEE — CONSULTANT FUNCTIONAL SUPERVISOR

STATE OF CALIFORNIA - DEPARTMENT OF TRANSPORTATION
Caltrans

X:\880_Marina-Davis\000_CAD\Sheets\0000_Final PSE-ElecCADSubmittal\Final_Submittal_20111227\880MDRefMerge_20111226\EA04-3g9211_CADD-SUBMITTAL_20111227\43g921ob013.dgn

LAST REVISION 11-16-11 | DATE PLOTTED => 19-APR-2012 | TIME PLOTTED => 18:56

Dist	COUNTY	ROUTE	POST MILES TOTAL PROJECT	SHEET No.	TOTAL SHEETS
04	Ala	880	22.6/24.0	426	760

REGISTERED CIVIL ENGINEER 11-16-11 DATE

4-16-12
PLANS APPROVAL DATE

REGISTERED PROFESSIONAL ENGINEER SEAN A. CHARLES No. C50767 Exp. 9-30-13 CIVIL STATE OF CALIFORNIA

THE STATE OF CALIFORNIA OR ITS OFFICERS OR AGENTS SHALL NOT BE RESPONSIBLE FOR THE ACCURACY OR COMPLETENESS OF SCANNED COPIES OF THIS PLAN SHEET.

WMH CORPORATION
555 12th St
Suite 1900
Oakland, CA 94607

ACTC
1333 Broadway
Suites 220 & 300
Oakland, CA 94612

NOTE:

ALL DIMENSIONS ARE IN INCHES UNLESS OTHERWISE NOTED.

6.0" RADIUS, 2.0" BORDER, WHITE ON GREEN;
[EXIT] E [33 B] E;
12.0" RADIUS, 2.0" BORDER, WHITE ON GREEN;
[MARINA Blvd] E Mod; [WEST] E Mod; RECTANGLE YELLOW;

OVERHEAD SIGN (M) ON SHEET S-5, SD-2

SIGN DETAILS

NO SCALE

SD-14

JJC	8/5/10		
JC	4/8/10		
JC	12/14/09	REVISED BY	JOSEPH J. COOPER
		DATE REVISED	SEAN A. CHARLES
		CALCULATED-DESIGNED BY	TIMOTHY J. LEE
		CHECKED BY	
		CONSULTANT FUNCTIONAL SUPERVISOR	

STATE OF CALIFORNIA - DEPARTMENT OF TRANSPORTATION
Caltrans

X:\880_Marina-Davis\000_CAD\Sheets\0000_Final PSE-ElecCADDSubmittal\Final_Submittal_20111227\880MDRefMerge_20111226\EA04-3g9211_CADD-SUBMITTAL_20111227\43g921ob014.dgn

LAST REVISION 11-16-11 | DATE PLOTTED => 19-APR-2012 | TIME PLOTTED => 18:56

Dist	COUNTY	ROUTE	POST MILES TOTAL PROJECT	SHEET No.	TOTAL SHEETS
04	Ala	880	22.6/24.0	427	760

REGISTERED CIVIL ENGINEER 11-16-11 DATE

4-16-12
PLANS APPROVAL DATE

REGISTERED PROFESSIONAL ENGINEER SEAN A. CHARLES No. C50767 Exp. 9-30-13 CIVIL STATE OF CALIFORNIA

THE STATE OF CALIFORNIA OR ITS OFFICERS OR AGENTS SHALL NOT BE RESPONSIBLE FOR THE ACCURACY OR COMPLETENESS OF SCANNED COPIES OF THIS PLAN SHEET.

WMH CORPORATION
555 12th St
Suite 1900
Oakland, CA 94607

ACTC
1333 Broadway
Suites 220 & 300
Oakland, CA 94612

NOTE:
ALL DIMENSIONS ARE IN INCHES UNLESS OTHERWISE NOTED.

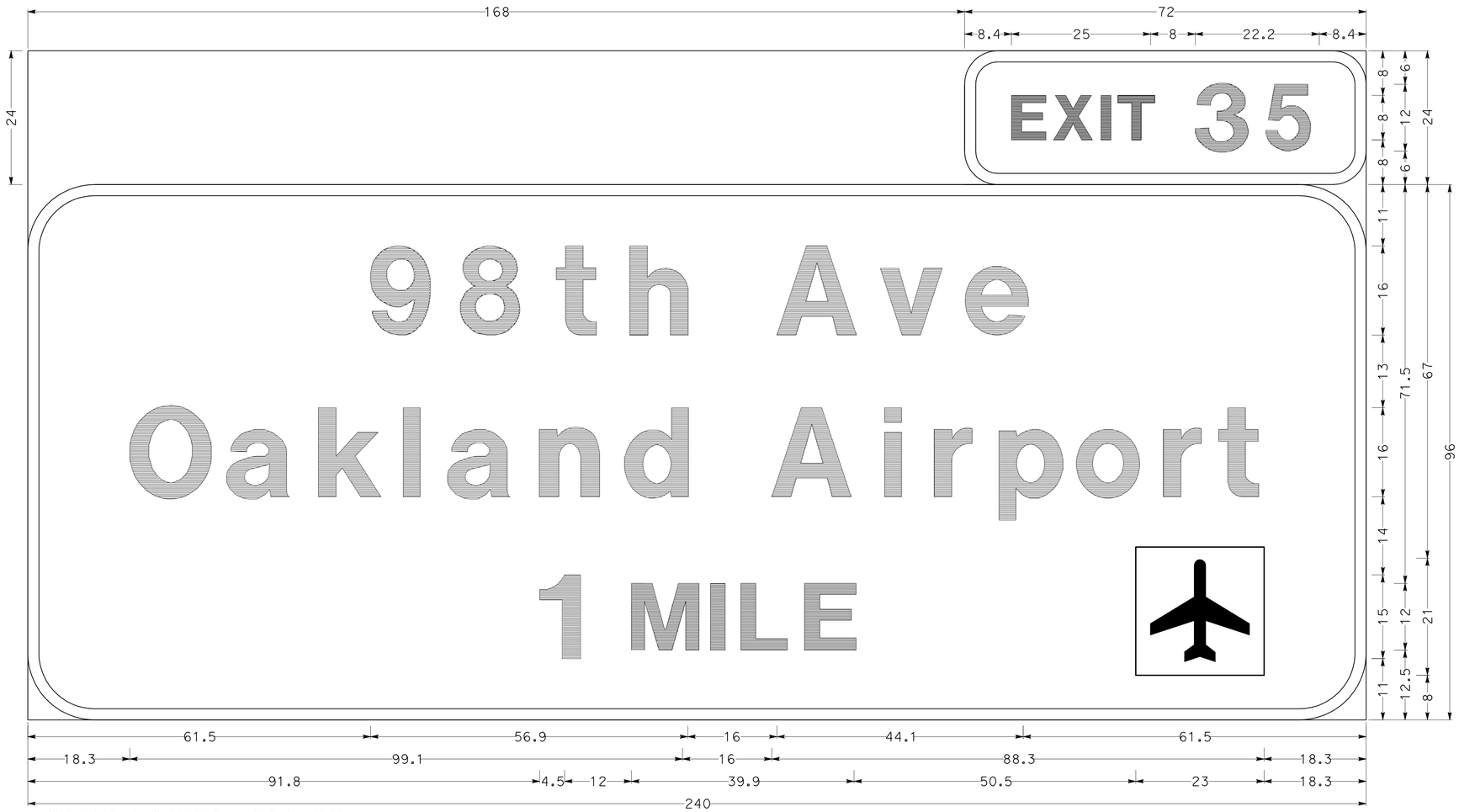

6.0" RADIUS, 2.0" BORDER, WHITE ON GREEN;
[EXIT 35] E;
12.0" RADIUS, 2.0" BORDER, WHITE ON GREEN;
[98TH AVE] E; [OAKLAND AIRPORT] E; [1 MILE] E Mod; AIRPORT;

OVERHEAD SIGN (P) ON SHEET S-7, SD-2

SIGN DETAILS
NO SCALE
SD-15

JJC	JC	JC	JOSEPH J. COOPER
8/5/10	4/8/10	12/14/09	SEAN A. CHARLES
REVISED BY	CALCULATED-DESIGNED BY	CHECKED BY	CONSULTANT FUNCTIONAL SUPERVISOR
DATE REVISED	TIMOTHY J. LEE		

STATE OF CALIFORNIA - DEPARTMENT OF TRANSPORTATION
Caltrans

X:\880_Moring-Davis\000_CAD\Sheets\0000_Final PSE-Elec CADSubmittal\Final_Submittal_20111227\880MDRefMerge_20111226\EA04-3g9211_CADD-SUBMITTAL_20111227\43a921ob015.dgn

LAST REVISION 11-16-11 | DATE PLOTTED => 19-APR-2012 TIME PLOTTED => 18:56

Dist	COUNTY	ROUTE	POST MILES TOTAL PROJECT	SHEET No.	TOTAL SHEETS
04	Ala	880	22.6/24.0	428	760

REGISTERED CIVIL ENGINEER 11-16-11 DATE

4-16-12
PLANS APPROVAL DATE

REGISTERED PROFESSIONAL ENGINEER SEAN A. CHARLES No. C50767 Exp. 9-30-13 CIVIL STATE OF CALIFORNIA

THE STATE OF CALIFORNIA OR ITS OFFICERS OR AGENTS SHALL NOT BE RESPONSIBLE FOR THE ACCURACY OR COMPLETENESS OF SCANNED COPIES OF THIS PLAN SHEET.

WMH CORPORATION
555 12th St
Suite 1900
Oakland, CA 94607

ACTC
1333 Broadway
Suites 220 & 300
Oakland, CA 94612

NOTE:

ALL DIMENSIONS ARE IN INCHES UNLESS OTHERWISE NOTED.

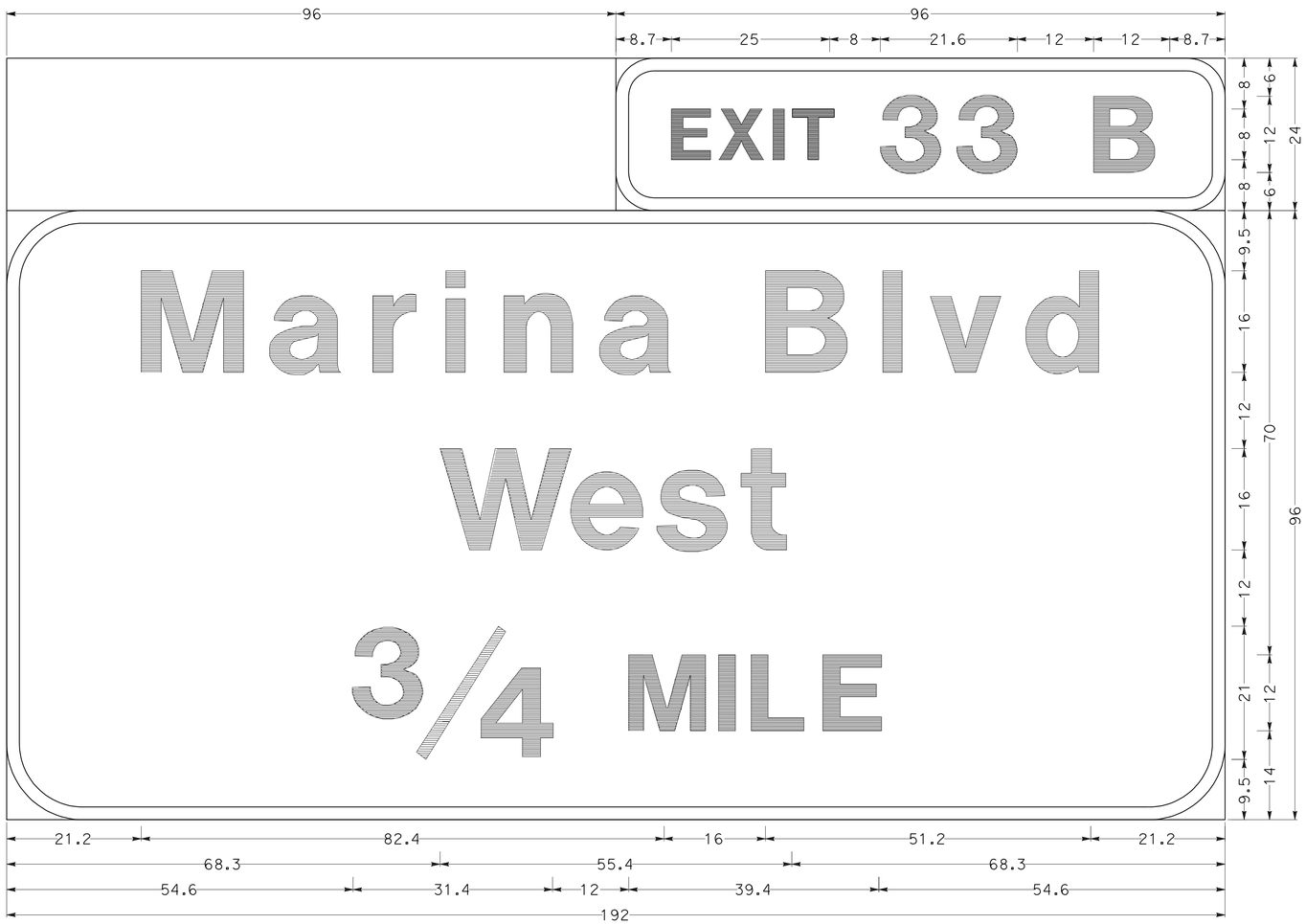

6.0" Radius, 2.0" Border, White on Green;
[EXIT 33 A] E;
12.0" Radius, 2.0" Border, White on Green;
[Marina Blvd] E Mod; [West] E Mod; [6/64 MILE] E;

OVERHEAD SIGN (R) ON SHEET S-9, SD-2

SIGN DETAILS

NO SCALE

SD-16

JJC	8/5/10		
JC	4/8/10		
JC	12/14/09	REVISED BY	DATE REVISED
JOSEPH J. COOPER		CALCULATED-DESIGNED BY	
SEAN A. CHARLES		CHECKED BY	
TIMOTHY J. LEE		CONSULTANT FUNCTIONAL SUPERVISOR	

STATE OF CALIFORNIA - DEPARTMENT OF TRANSPORTATION

Caltrans

X:\880_Marina-Davis\000_CAD\Sheets\0000_Final\PSE-ElecCADSubmittal\Final_Submittal_20111227\880MDRefMerge_20111226\EA04-3g9211_CADD-SUBMITTAL_20111227\43g921ob016.dgn

LAST REVISION 11-16-11 | DATE PLOTTED => 19-APR-2012 | TIME PLOTTED => 18:56

Dist	COUNTY	ROUTE	POST MILES TOTAL PROJECT	SHEET No.	TOTAL SHEETS
04	Ala	880	22.6/24.0	429	760

REGISTERED CIVIL ENGINEER 11-16-11 DATE

4-16-12
PLANS APPROVAL DATE

REGISTERED PROFESSIONAL ENGINEER SEAN A. CHARLES No. C50767 Exp. 9-30-13 CIVIL STATE OF CALIFORNIA

THE STATE OF CALIFORNIA OR ITS OFFICERS OR AGENTS SHALL NOT BE RESPONSIBLE FOR THE ACCURACY OR COMPLETENESS OF SCANNED COPIES OF THIS PLAN SHEET.

WMH CORPORATION
555 12th St
Suite 1900
Oakland, CA 94607

ACTC
1333 Broadway
Suites 220 & 300
Oakland, CA 94612

NOTE:

ALL DIMENSIONS ARE IN INCHES UNLESS OTHERWISE NOTED.

6.0" RADIUS, 2.0" BORDER, WHITE ON GREEN;
[EXIT 34] E;
12.0" RADIUS, 2.0" BORDER, WHITE ON GREEN;
[DAVIS STREET] E Mod; ARROW 16CAP-2LH - 25.0" 60°; RECTANGLE YELLOW;

OVERHEAD SIGN (R) ON SHEET S-9, SD-2

SIGN DETAILS

NO SCALE

SD-17

JJC	JC	JC	JOSEPH J. COOPER	REVISED BY
8/5/10	4/8/10	12/14/09	SEAN A. CHARLES	DATE REVISED

CALCULATED-DESIGNED BY
CHECKED BY
CONSULTANT FUNCTIONAL SUPERVISOR
TIMOTHY J. LEE

STATE OF CALIFORNIA - DEPARTMENT OF TRANSPORTATION
Caltrans

X:\880_Marina-Davis\000_CAD\Sheets\0000_Final PSE-Elec CADD Submittal\Final_Submittal_20111227\880MDRefMerge_20111226\EA04-3g9211_CADD-SUBMITTAL_20111227\43g921ob017.dgn

LAST REVISION 11-16-11
DATE PLOTTED => 19-APR-2012
TIME PLOTTED => 18:56

Dist	COUNTY	ROUTE	POST MILES TOTAL PROJECT	SHEET No.	TOTAL SHEETS
04	Ala	880	22.6/24.0	430	760

REGISTERED CIVIL ENGINEER 11-16-11 DATE

4-16-12
PLANS APPROVAL DATE

REGISTERED PROFESSIONAL ENGINEER SEAN A. CHARLES No. C50767 Exp. 9-30-13 CIVIL STATE OF CALIFORNIA

THE STATE OF CALIFORNIA OR ITS OFFICERS OR AGENTS SHALL NOT BE RESPONSIBLE FOR THE ACCURACY OR COMPLETENESS OF SCANNED COPIES OF THIS PLAN SHEET.

WMH CORPORATION
555 12th St
Suite 1900
Oakland, CA 94607

ACTC
1333 Broadway
Suites 220 & 300
Oakland, CA 94612

NOTE:

ALL DIMENSIONS ARE IN INCHES UNLESS OTHERWISE NOTED.

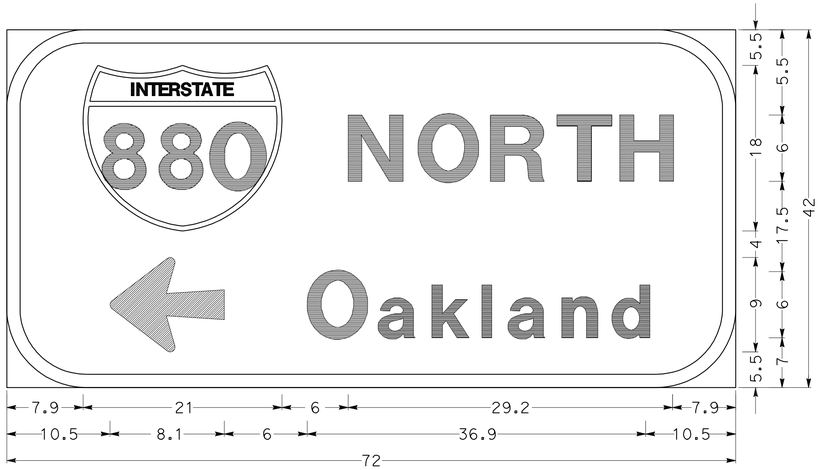

12.0" RADIUS, 2.0" BORDER, WHITE ON GREEN;
[NORTH] E Mod; ARROW 8CAP-1L - 17.3" 180°; [OAKLAND] E Mod;

SIGN (S2-49) **ON SHEET S-2**

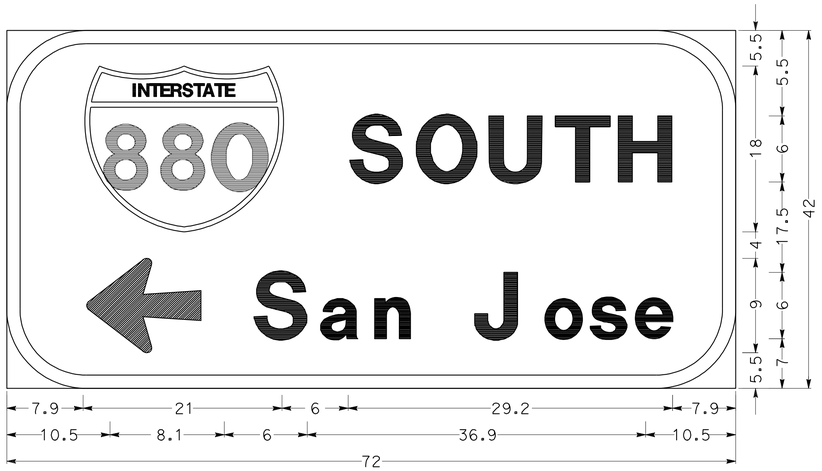

12.0" RADIUS, 2.0" BORDER, WHITE ON GREEN;
[SOUTH] E Mod; ARROW 8CAP-1L - 17.3" 180°; [SAN JOSE] E Mod;

SIGN (S2-35) **ON SHEET S-2**

6.0" Radius, 2.0" Border, White on Green;
[EXIT 34] E;
12.0" Radius, 2.0" Border, White on Green;
[Downtown] E Mod; [San Leandro] E Mod; [NEXT EXIT] E;

SIGN (S2-53) **ON SHEET S-2**

SIGN DETAILS

NO SCALE

SD-18

HAC	4/20/11		
JJC	8/5/10		
JC	4/8/10	REVISED BY	DATE REVISED
JOSEPH J. COOPER		CALCULATED-DESIGNED BY	
SEAN A. CHARLES		CHECKED BY	
TIMOTHY J. LEE		CONSULTANT FUNCTIONAL SUPERVISOR	

STATE OF CALIFORNIA - DEPARTMENT OF TRANSPORTATION

Caltrans

X:\880_Maring-Davis\000_CAD\Sheets\0000_Final PSE-Elec CADSubmittal\Final_Submittal_20111227\880MDRefMerge_20111226\EA04-3a9211_CADD-SUBMITTAL_20111227\43a921ob018.dgn

LAST REVISION 11-16-11 | DATE PLOTTED => 19-APR-2012 | TIME PLOTTED => 18:56

Dist	COUNTY	ROUTE	POST MILES TOTAL PROJECT	SHEET No.	TOTAL SHEETS
04	Ala	880	22.6/24.0	431	760

REGISTERED CIVIL ENGINEER 11-16-11 DATE

4-16-12
PLANS APPROVAL DATE

REGISTERED PROFESSIONAL ENGINEER SEAN A. CHARLES No. C50767 Exp. 9-30-13 CIVIL STATE OF CALIFORNIA

THE STATE OF CALIFORNIA OR ITS OFFICERS OR AGENTS SHALL NOT BE RESPONSIBLE FOR THE ACCURACY OR COMPLETENESS OF SCANNED COPIES OF THIS PLAN SHEET.

WMH CORPORATION
555 12th St
Suite 1900
Oakland, CA 94607

ACTC
1333 Broadway
Suites 220 & 300
Oakland, CA 94612

OVERHEAD SIGN QUANTITIES

SHEET No.	SIGN No.	LOCATION		REMOVE SIGN STRUCTURE	FURNISH SIGN STRUCTURE (TRUSS)	INSTALL SIGN STRUCTURE (TRUSS)	60" CIDH CONCRETE PILE (SIGN FOUNDATION)	INSTALL SIGN OVERLAY	INSTALL SIGN PANEL ON EXISTING FRAME	REMARKS
		STATION	DIRECTION	EA	LB		LF	SQFT	SQFT	
	A									NOT USED
S-1	B	"A" 319+20	NB						317	
S-2	C	"MR2" 27+15	NB		23990	23990	25			
	D	"A" 329+20	NB	1						BRIDGE MOUNTED, SEE STRUCTURE PLANS
	E	"A" 330+20	SB	1						BRIDGE MOUNTED, SEE STRUCTURE PLANS
	F	"A" 330+90	SB							BRIDGE MOUNTED, SEE STRUCTURE PLANS
	G	"A" 330+50	SB	1						BRIDGE MOUNTED, SEE STRUCTURE PLANS
	H	"A" 331+10	SB							BRIDGE MOUNTED, SEE STRUCTURE PLANS
S-4	I	"A" 340+00	SB		22430	22430				MOUNTED ON RETAINING WALL
	J	"A" 345+00	SB						183	BRIDGE MOUNTED, SEE STRUCTURE PLANS
	K	"A" 346+20	SB		13530	13530				CMS MOUNTED ON RETAINING WALL
S-5	L	"A" 351+20	SB	1						
	M	"A" 353+50	SB		22460	22460				MOUNTED ON RETAINING WALL
S-6	N	"A" 365+20	SB	1						
S-7	O	"A" 371+90	NB	1						BRIDGE MOUNTED, SEE STRUCTURE PLANS
	P	"A" 372+50	NB							BRIDGE MOUNTED, SEE STRUCTURE PLANS
S-8	Q	"DA1" 12+20	EB					24		
S-9	R	"DL3" 79+90	SB		23740	23740	25			PLACE CIDH WITH TEMPORARY CASING
TOTAL				6	106150	106150	50	24	500	

SIGN QUANTITIES
SQ-1

LAST REVISION	DATE PLOTTED => 19-APR-2012
11-16-11	TIME PLOTTED => 18:56

LMH	HC	ML	REVISED BY	HEATHER A. CHARLES	CALCULATED-DESIGNED BY	CONSULTANT FUNCTIONAL SUPERVISOR	TIMOTHY J. LEE
11/22/11	5/18/11	5/06/11	DATE REVISED	SEAN A. CHARLES	CHECKED BY		

STATE OF CALIFORNIA - DEPARTMENT OF TRANSPORTATION
Caltrans

X:\880_Marina-Davis\000_CAD\Sheets\0000_Final PSE-ElecCADDSubmittal\Final_Submittal_20111227\880MDRefMerge_20111226\EA04-3g9211_CADD-SUBMITTAL_20111227\43g921oc001.dgn

Dist	COUNTY	ROUTE	POST MILES TOTAL PROJECT	SHEET No.	TOTAL SHEETS
04	Ala	880	22.6/24.0	432	760

REGISTERED CIVIL ENGINEER 11-16-11 DATE

4-16-12
PLANS APPROVAL DATE

REGISTERED PROFESSIONAL ENGINEER SEAN A. CHARLES No. C50767 Exp. 9-30-13 CIVIL STATE OF CALIFORNIA

THE STATE OF CALIFORNIA OR ITS OFFICERS OR AGENTS SHALL NOT BE RESPONSIBLE FOR THE ACCURACY OR COMPLETENESS OF SCANNED COPIES OF THIS PLAN SHEET.

WMH CORPORATION
555 12th St
Suite 1900
Oakland, CA 94607

ACTC
1333 Broadway
Suites 220 & 300
Oakland, CA 94612

SIGN PANEL SUMMARY

SIGN No.	SIGN CODE	PANEL SIZE L x D (INCHES x INCHES)	SINGLE FACED	DOUBLE FACED	SIGN FACING MATERIAL: SHEETING COLOR (BACKGROUND)	SIGN FACING MATERIAL: RETROREFLECTIVE ASTM TYPE (BACKGROUND)	SIGN FACING MATERIAL: SHEETING COLOR (BORDER & LEGEND)	SIGN FACING MATERIAL: RETROREFLECTIVE ASTM TYPE (BORDER & LEGEND)	STANDARD (PROTECTIVE FILM)	PREMIUM (PROTECTIVE FILM)	FURNISH SINGLE SHEET ALUMINUM SIGN (0.063" FRAMED) (SQFT)	FURNISH FORMED PANEL SIGN (OVERHEAD) (SQFT)	REMARKS
S1-7	R93-2 (CA)	30 x 72	x		WHITE	III	BLACK	PLAIN		x	15		
B	G85-10 (CA)	240 x 100	x		GREEN	IV	WHITE	IX		x		167	SEE SD-4
	G85-10 (CA)	216 x 100	x		GREEN	IV	WHITE	IX		x		150	SEE SD-5
C	G83-4 (CA)	192 x 120	x		GREEN	IV	WHITE	IX		x		160	SEE SD-6
	G85-10 (CA)	192 x 120	x		GREEN	IV	WHITE	IX		x		160	SEE SD-7
F	G23-1 (CA)	264 x 100	x		GREEN	IV	WHITE	IX		x		183	SEE SD-8
H	G85-10 (CA)	216 x 100	x		GREEN	IV	WHITE	IX		x		150	SEE SD-9
S2-3	G84-3 (33B)	48 x 60	x		GREEN	IV	WHITE	IX		x	20		
S2-4	W11-2	30 x 30	x		YELLOW	III	BLACK	PLAIN		x	6		
	R5-1	30 x 30	x		WHITE	III	BLACK	PLAIN		x	6		
	R5-1a	30 x 18	x		WHITE	III	BLACK	PLAIN		x	4		
S2-9	R86-3 (CA)	30 x 66	x		WHITE	III	BLACK	PLAIN		x	14		
S2-19	R91-3 (CA)	36 x 54	x		WHITE	III	BLACK	PLAIN		x	14		
S2-21	R91-3 (CA)	36 x 54	x		WHITE	III	BLACK	PLAIN		x	14		
S2-22	R91-3 (CA)	36 x 54	x		WHITE	III	BLACK	PLAIN		x	14		
S2-23	W4-10 (CA) (25)	48 x 48	x		YELLOW	VII	BLACK	PLAIN		x	16		
S2-24	G84-3 (33A)	48 x 60	x		GREEN	IV	WHITE	IX		x	20		
S2-35	G24-1 (CA)	72 x 42	x		GREEN	IV	WHITE	IX		x	21		SEE SD-19
S2-41	W4-2	30 x 30	x		YELLOW	III	BLACK	PLAIN		x	6		
S2-49	G24-1 (CA)	72 x 42	x		GREEN	IV	WHITE	IX		x	21		SEE SD-19
S2-50	R1-5	30 x 30	x		WHITE	III	BLACK	PLAIN		x	6		
S2-51	W11-2	30 x 30	x		YELLOW	III	BLACK	PLAIN		x	6		
S2-52	W11-3	30 x 30	x		YELLOW	III	BLACK	PLAIN		x	6		
S2-53	G86-5	168 x 105	x		GREEN	IV	WHITE	IX		x	123		
S2-54	W11-2	30 x 30	x		YELLOW	III	BLACK	PLAIN		x	6		
	R1-5	30 x 30	x		WHITE	III	BLACK	PLAIN		x	6		
S3-3	R61-19 (CA)	30 x 24	x		WHITE	III	BLACK	PLAIN		x	5		
I	G83-4 (CA)	192 x 120	x		GREEN	IV	WHITE	IX		x		160	SEE SD-10
	G85-10 (CA)	192 x 120	x		GREEN	IV	WHITE	IX		x		160	SEE SD-11
J	G23-1 (CA)	264 x 100	x		GREEN	IV	WHITE	IX		x		183	SEE SD-12
S4-5	R91-3 (CA)	48 x 60	x		WHITE	III	BLACK	PLAIN		x	20		
S4-6	SR50-2 (CA)	30 x 66	x		WHITE	III	BLACK	PLAIN		x	14		
S4-8	R93-2 (CA)	30 x 72	x		WHITE	III	BLACK	PLAIN		x	15		
							SUBTOTAL				398	1473	

FRP=FIBERGLASS REINFORCED PLASTIC
RSPF= REMOVABLE SIGN PANEL FRAME
NOTE: CALIFORNIA SIGN CODES ARE DESIGNATED BY (CA). OTHERWISE, FEDERAL MUTCD SIGN CODES ARE SHOWN.

SIGN QUANTITIES
SQ-2

LMH	11/22/11	REVISED BY	HEATHER A. CHARLES
HAC	5/18/11	DATE REVISED	SEAN A. CHARLES
HAC	4/20/11	CALCULATED-DESIGNED BY	CHECKED BY

CONSULTANT FUNCTIONAL SUPERVISOR: TIMOTHY J. LEE

STATE OF CALIFORNIA - DEPARTMENT OF TRANSPORTATION

Caltrans

X:\880_Marina-Davis\000_CAD\Sheets\0000_Final PSE-ElecCADDSubmittal\Final_Submittal_20111227\880MDRefMerge_20111226\EA04-3g921_CADD-SUBMITTAL_20111227\43g921oc002.dgn

LAST REVISION 11-16-11 | DATE PLOTTED => 19-APR-2012 | TIME PLOTTED => 18:56

Dist	COUNTY	ROUTE	POST MILES TOTAL PROJECT	SHEET No.	TOTAL SHEETS
04	Ala	880	22.6/24.0	433	760

REGISTERED CIVIL ENGINEER 11-16-11 DATE

4-16-12
PLANS APPROVAL DATE

REGISTERED PROFESSIONAL ENGINEER SEAN A. CHARLES No. C50767 Exp. 9-30-13 CIVIL STATE OF CALIFORNIA

THE STATE OF CALIFORNIA OR ITS OFFICERS OR AGENTS SHALL NOT BE RESPONSIBLE FOR THE ACCURACY OR COMPLETENESS OF SCANNED COPIES OF THIS PLAN SHEET.

WMH CORPORATION
555 12th St
Suite 1900
Oakland, CA 94607

ACTC
1333 Broadway
Suites 220 & 300
Oakland, CA 94612

SIGN PANEL SUMMARY (CONT)

SIGN No.	SIGN CODE	PANEL SIZE L x D (INCHES x INCHES)	SINGLE FACED	DOUBLE FACED	SIGN FACING MATERIAL: SHEETING COLOR (BACKGROUND)	SIGN FACING MATERIAL: RETROREFLECTIVE ASTM TYPE (BACKGROUND)	SIGN FACING MATERIAL: SHEETING COLOR (BORDER & LEGEND)	SIGN FACING MATERIAL: RETROREFLECTIVE ASTM TYPE (BORDER & LEGEND)	STANDARD (PROTECTIVE FILM)	PREMIUM (PROTECTIVE FILM)	FURNISH SINGLE SHEET ALUMINUM SIGN (0.063" FRAMED) (SQFT)	FURNISH FORMED PANEL SIGN (OVERHEAD) (SQFT)	REMARKS
M	G83-4 (CA)	192 x 120	x		GREEN	IV	WHITE	IX		x		160	SEE SD-13
	G85-10 (CA)	192 x 120	x		GREEN	IV	WHITE	IX		x		160	SEE SD-14
S5-2	R93-2 (CA)	30 x 72	x		WHITE	III	BLACK	PLAIN		x	15		
S5-6	R86-3 (CA)	30 x 66	x		WHITE	III	BLACK	PLAIN		x	14		
S6-5	R93-2 (CA)	30 x 72	x		WHITE	III	BLACK	PLAIN		x	15		
P	G85-10 (CA)	240 x 120	x		GREEN	IV	WHITE	IX		x		200	SEE SD-15
S7-53	W11-2	30 x 30	x		YELLOW	III	BLACK	PLAIN		x	6		
S7-56	W4-10 (CA) (15)	48 x 48	x		YELLOW	III	BLACK	PLAIN		x	16		
S7-57	W11-2	30 x 30	x		YELLOW	III	BLACK	PLAIN		x	6		
S7-58	W11-2	30 x 30	x		YELLOW	III	BLACK	PLAIN		x	6		
S7-59	G20-5 (CA)	84 x 72	x		GREEN	IV	WHITE	x		x	42		SEE SD-19
Q	G85 (Mod)	72 x 48	x		GREEN	IV				x		24	
R	G83-4 (CA)	192 x 120	x		GREEN	IV	WHITE	IX		x		160	SEE SD-16
	G85-10 (CA)	192 x 120	x		GREEN	IV	WHITE	IX		x		160	SEE SD-17
S9-2	G84-2 (CA) (34)	52 x 48	x		GREEN	IV	WHITE	IX		x	17		
S9-4	R93-2 (CA)	30 x 72	x		WHITE	III	BLACK	PLAIN		x	15		
						SHEET SQ-3 SUBTOTAL					152	864	
						SHEET SQ-2 SUBTOTAL					398	1473	
						TOTAL					550	2337	

FRP=FIBERGLASS REINFORCED PLASTIC
RSPF= REMOVABLE SIGN PANEL FRAME
NOTE: CALIFORNIA SIGN CODES ARE DESIGNATED BY (CA). OTHERWISE, FEDERAL MUTCD SIGN CODES ARE SHOWN.

SIGN QUANTITIES
SQ-3

LMH	11/22/11	HEATHER A. CHARLES	REVISED BY	HAC	CALCULATED-DESIGNED BY
HAC	5/18/11	SEAN A. CHARLES	DATE REVISED	HAC	CHECKED BY
HAC	4/20/11	TIMOTHY J. LEE	CONSULTANT FUNCTIONAL SUPERVISOR		

STATE OF CALIFORNIA - DEPARTMENT OF TRANSPORTATION
Caltrans

X:\880_Marina-Davis\000_CAD\Sheets\0000_Final PSE-ElecCADSubmittal\Final_Submittal_20111227\880MDRefMerge_20111226\EA04-3g9211_CADD-SUBMITTAL_20111227\43g921oc003.dgn

LAST REVISION 11-16-11 DATE PLOTTED => 25-APR-2012 TIME PLOTTED => 11:38

Dist	COUNTY	ROUTE	POST MILES TOTAL PROJECT	SHEET No.	TOTAL SHEETS
04	Ala	880	22.6/24.0	434	760

REGISTERED CIVIL ENGINEER 11-16-11 DATE

4-16-12
PLANS APPROVAL DATE

REGISTERED PROFESSIONAL ENGINEER SEAN A. CHARLES No. C50767 Exp. 9-30-13 CIVIL STATE OF CALIFORNIA

THE STATE OF CALIFORNIA OR ITS OFFICERS OR AGENTS SHALL NOT BE RESPONSIBLE FOR THE ACCURACY OR COMPLETENESS OF SCANNED COPIES OF THIS PLAN SHEET.

WMH CORPORATION
555 12th St
Suite 1900
Oakland, CA 94607

ACTC
1333 Broadway
Suites 220 & 300
Oakland, CA 94612

ROADSIDE SIGN QUANTITIES

SHEET No.	SIGN No.	SIGN CODE	POST SIZE AND LENGTH: 4" x 4"	4" x 6"	6" x 6"	6" x 8"	Type L	ROADSIDE SIGN (WOOD POST): ONE POST	TWO POST	METAL (BARRIER MOUNTED SIGN)	INSTALL ROADSIDE SIGN PANEL ON EXISTING POST	REMOVE ROADSIDE SIGN	RELOCATE ROADSIDE SIGN: ONE POST	TWO POST	SSBM	REMARKS
								EA		LB			EA			
S-1	S1-1	M3-3													1	MOUNT TO ELECTROLIER
		G27-2 (CA) (880)														
	S1-2	W12-2										1				
		W16-2a														
	S1-3	W4-2											1			
	S1-4	W4-1											1			
	S1-5	R89-1 (CA)													1	MOUNT TO RAMP METERING
		R10-6														
	S1-6	R89-1 (CA)													1	MOUNT TO RAMP METERING
		R10-6														
	S1-7	R93-2 (CA)									1					MOUNT TO EXISTING NORTHBOUND SIGN
	S1-8	R82-1 (CA)										1				
	S1-9	W12-2										1				
S-2	S2-1	W13-2 (35)											1			
	S2-2	W13-2 (25)											1			
	S2-3	G84-3 (33B)		14.2′				1								
	S2-4	W11-2		12.5′				1								
		R5-1														
		R5-1a														
	S2-5	R5-1										1				
		R5-1a														
	S2-6	W4-3											1			
	S2-7	W34B (CA)										1				BRIDGE MOUNTED
	S2-8	W34B (CA)										1				BRIDGE MOUNTED
	S2-9	R86-3 (CA)									1					MOUNT TO EXISTING NORTHBOUND SIGN
	S2-10	G92											1			
		G27-2 (CA) (880)														
		M3-1														
		M6-2														
	S2-11	R6-1										1				
	S2-12	W4-1										1				
	S2-13	G92											1			
		G27-2 (CA) 880														
		M3-1														
	S2-14	R5-10a											1			
	S2-15	R5-1											1			
		R5-1a														
		W4-1														
SUBTOTAL								2	0	0	2	8	9	0	3	

SIGN QUANTITIES
SQ-4

STATE OF CALIFORNIA - DEPARTMENT OF TRANSPORTATION
Caltrans

CONSULTANT FUNCTIONAL SUPERVISOR: TIMOTHY J. LEE
CALCULATED-DESIGNED BY: SEAN A. CHARLES
CHECKED BY: HEATHER A. CHARLES
REVISED BY: HAC HAC HAC LMH
DATE REVISED: 4/20/11 5/18/11 11/22/11

X:\880_Maring-Davis\000_CAD\Sheets\0000_Final PSE-Elec CADD Submittal\Final_Submittal_20111227\880MDRefMerge_20111226\EA04-3g9211_CADD-SUBMITTAL_20111227\43a921oc004.dgn

LAST REVISION 11-16-11 | DATE PLOTTED => 25-APR-2012 | TIME PLOTTED => 11:38

Dist	COUNTY	ROUTE	POST MILES TOTAL PROJECT	SHEET No.	TOTAL SHEETS
04	Ala	880	22.6/24.0	435	760

REGISTERED CIVIL ENGINEER 11-16-11 DATE

4-16-12
PLANS APPROVAL DATE

REGISTERED PROFESSIONAL ENGINEER SEAN A. CHARLES No. C50767 Exp. 9-30-13 CIVIL STATE OF CALIFORNIA

THE STATE OF CALIFORNIA OR ITS OFFICERS OR AGENTS SHALL NOT BE RESPONSIBLE FOR THE ACCURACY OR COMPLETENESS OF SCANNED COPIES OF THIS PLAN SHEET.

WMH CORPORATION
555 12th St
Suite 1900
Oakland, CA 94607

ACTC
1333 Broadway
Suites 220 & 300
Oakland, CA 94612

ROADSIDE SIGN QUANTITIES (CONT)

SHEET No.	SIGN No.	SIGN CODE	POST SIZE AND LENGTH 4" x 4"	4" x 6"	6" x 6"	6" x 8"	Type L	ROADSIDE SIGN (WOOD POST) ONE POST	TWO POST	METAL (BARRIER MOUNTED SIGN)	INSTALL ROADSIDE SIGN PANEL ON EXISTING POST	REMOVE ROADSIDE SIGN	RELOCATE ROADSIDE SIGN ONE POST	TWO POST	SSBM	REMARKS
								EA		LB			EA			
S-2	S2-16	R5-1														
		R5-1a											1			
		R6-1														
	S2-17	G20-7 (CA)												1		
	S2-18	G81 (CA)												1		
	S2-19	R91-3 (CA)	9.1′					1								
	S2-20	G86-5 (CA)												1		
	S2-21	R91-3 (CA)			12.1′			1								
	S2-22	R91-3 (CA)								50						
	S2-23	W4-10 (CA) (25)				15.7′		1								
	S2-24	G84-3 (33A)			15.3′			1								
	S2-25	R2-1 (40)											1			
	S2-26	G20-7 (CA)												1		
	S2-27	R5-1														
		R5-1a											1			
		R6-1														
	S2-28	R5-10c											1			
		W11-2														
	S2-29	G1-4 (CA)												1		
	S2-30	W11-2										1				
	S2-31	R6-1										1				
	S2-32	W11-2										1				
	S2-33	R5-10a											1			
	S2-34	G92														
		G27-2 (CA) (880)										1				
		M3-1														
	S2-35	G24-1 (CA)			15.5′				1							
	S2-36	R5-1														
		R5-1a											1			
		W4-1														
	S2-37	G92														
		G27-2 (CA) (880)										1				
		M3-1														
		M6-2														
	S2-38	G92														
		G27-2 (CA) (880)											1			
		M3-1														
	S2-39	W34B (CA)										1				BRIDGE MOUNTED
	S2-40	W34B (CA)										1				BRIDGE MOUNTED
SUBTOTAL								4	1	50	0	7	7	5	0	

SIGN QUANTITIES
SQ-5

LAST REVISION	DATE PLOTTED => 19-APR-2012
11-16-11	TIME PLOTTED => 18:57

STATE OF CALIFORNIA - DEPARTMENT OF TRANSPORTATION
Caltrans

TIMOTHY J. LEE — CONSULTANT FUNCTIONAL SUPERVISOR
CALCULATED-DESIGNED BY
CHECKED BY
SEAN A. CHARLES
HEATHER A. CHARLES
REVISED BY
DATE REVISED
HAC 4/20/11
HAC 5/18/11
LMH 11/22/11

X:\880_Marina-Davis\000_CAD\Sheets\0000_Final PSE-Elec CADD Submittal\Final_Submittal_20111227\880MDRefMerge_20111226\EA04-3g921_CADD-SUBMITTAL_20111227\43g921oc005.dgn

Dist	COUNTY	ROUTE	POST MILES TOTAL PROJECT	SHEET No.	TOTAL SHEETS
04	Ala	880	22.6/24.0	436	760

REGISTERED CIVIL ENGINEER 11-16-11 DATE

4-16-12
PLANS APPROVAL DATE

REGISTERED PROFESSIONAL ENGINEER SEAN A. CHARLES No. C50767 Exp. 9-30-13 CIVIL STATE OF CALIFORNIA

THE STATE OF CALIFORNIA OR ITS OFFICERS OR AGENTS SHALL NOT BE RESPONSIBLE FOR THE ACCURACY OR COMPLETENESS OF SCANNED COPIES OF THIS PLAN SHEET.

WMH CORPORATION
555 12th St
Suite 1900
Oakland, CA 94607

ACTC
1333 Broadway
Suites 220 & 300
Oakland, CA 94612

ROADSIDE SIGN QUANTITIES (CONT)

SHEET No.	SIGN No.	SIGN CODE	POST SIZE AND LENGTH: 4" x 4"	4" x 6"	6" x 6"	6" x 8"	Type L	ROADSIDE SIGN (WOOD POST): ONE POST	TWO POST	METAL (BARRIER MOUNTED SIGN)	INSTALL ROADSIDE SIGN PANEL ON EXISTING POST	REMOVE ROADSIDE SIGN	RELOCATE ROADSIDE SIGN: ONE POST	TWO POST	SSBM	REMARKS
								EA		LB	EA					
S-2	S2-41	W4-2		13.8′				1								
	S2-42	G20-7 (CA)												1		
		R35														
	S2-43	G27-2 (CA) (880)											1			
		M3-3														
	S2-44	R5-1 (CA)														
		R5-1a											1			
		R3-3														
	S2-45	G200-53											1			
		RM- ANCHOR														
	S2-46	R1-2 (CA)									1		1			
		W11-2														
	S2-47	R1-6										1				
	S2-48	R1-2 (CA)									1		1			
		W11-2														
	S2-49	G24-1 (CA)			15.5′				1							
	S2-50	R1-2 (CA)	11.8′					1								
	S2-51	W11-2	11.3′					1								
	S2-52	W11-2	11.3′					1								
	S2-53	G86-5					22.5′		1							
	S2-54	W11-2		10.0′				1								
		R1-5														
S-3	S3-1	G77-1 (CA)												1		
	S3-2	G92 (CA)														
		G27-2 (CA) (880)										1				
		M3-1														
		M6-2														
	S3-3	R61-19 (CA)									1					
S-4	S4-1	W13-2 (30)											1			
	S4-2	S28 (CA)											1			
	S4-3	W34C (CA)										1				
	S4-4	W12-2										1				
	S4-5	R91-3 (CA)		14.3′				1								
	S4-6	SR50-2 (CA)								48						
	S4-7	G84-3 (33B)											1			
	S4-8	R93-2 (CA)									1					MOUNT TO EXISTING NORTHBOUND SIGN
	S4-9	W13-2 (35)											1			
	S4-10	R18A (CA)												1		
S-5	S5-1	D9-2											1			
		G58 (CA)														
	S5-2	R93-2 (CA)								50						
	S5-3	W12-2										1				
		W16-2a														
	S5-4	G86-1 (CA)												1		
	S5-5	G86-13 (CA)										1				
SUBTOTAL								6	2	98	4	6	10	4	0	

SIGN QUANTITIES
SQ-6

REVISED BY	DATE REVISED
LMH	11/22/11
HAC	5/18/11
HAC	4/20/11

HEATHER A. CHARLES — SEAN A. CHARLES — CALCULATED-DESIGNED BY — CHECKED BY — TIMOTHY J. LEE — CONSULTANT FUNCTIONAL SUPERVISOR

STATE OF CALIFORNIA - DEPARTMENT OF TRANSPORTATION

Caltrans

X:\880_Martinez-Davis\000_CAD\Sheets\0000_Final PSE-ElecCADDSubmittal\Final_Submittal_20111227\880MDRefMerge_20111226\EA04-3g921_CADD-SUBMITTAL_20111227\43g921oc006.dgn

LAST REVISION 11-16-11 DATE PLOTTED => 25-APR-2012 TIME PLOTTED => 11:38

Dist	COUNTY	ROUTE	POST MILES TOTAL PROJECT	SHEET No.	TOTAL SHEETS
04	Ala	880	22.6/24.0	437	760

REGISTERED CIVIL ENGINEER 11-16-11 DATE

4-16-12
PLANS APPROVAL DATE

REGISTERED PROFESSIONAL ENGINEER SEAN A. CHARLES No. C50767 Exp. 9-30-13 CIVIL STATE OF CALIFORNIA

THE STATE OF CALIFORNIA OR ITS OFFICERS OR AGENTS SHALL NOT BE RESPONSIBLE FOR THE ACCURACY OR COMPLETENESS OF SCANNED COPIES OF THIS PLAN SHEET.

WMH CORPORATION
555 12th St
Suite 1900
Oakland, CA 94607

ACTC
1333 Broadway
Suites 220 & 300
Oakland, CA 94612

ROADSIDE SIGN QUANTITIES (CONT)

SHEET No.	SIGN No.	SIGN CODE	POST SIZE AND LENGTH: 4" x 4"	4" x 6"	6" x 6"	6" x 8"	Type L	ROADSIDE SIGN (WOOD POST): ONE POST	TWO POST	METAL (BARRIER MOUNTED SIGN)	INSTALL ROADSIDE SIGN PANEL ON EXISTING POST	REMOVE ROADSIDE SIGN	RELOCATE ROADSIDE SIGN: ONE POST	TWO POST	SSBM	REMARKS
								EA		LB			EA			
S-5	S5-6	R86-3 (CA)								48						
	S5-7	W12-2										1				
		W16-2a														
S-6	S6-1	SG49A (CA)										1				
	S6-2	R48-1 (CA)											1			
		R2-1 (65)														
	S6-3	R6-4 (55)											1			
		R48-1 (CA)														
	S6-4	W4-7										1				
	S6-5	R93-2 (CA)								50						
	S6-6	W12-2										1				
S-7	S7-1	I-5														
		G33-1 (CA)														
		D9-11												1		
		G33-1 (CA)														
		G77-1 (CA)														
		G8-1 (CA) (DOWNTOWN)														
		BART														
	S7-2	R61-26 (CA)											1			
	S7-3	R5-1											1			
		R5-1a														
	S7-4	W11-2											1			
	S7-5	R2-1 (35)											1			
		R48-1 (CA)														
	S7-6	W3-3											1			
	S7-7	R6-1										1				
	S7-8	R3-1										1				
	S7-9	SR56 (CA)											1			
	S7-10	R6-1										1				
	S7-11	W12-2										1				
	S7-12	R5-10a											1			
	S7-13	W11-2											1			
	S7-14	M3-1											1			
		G92 (CA)														
		G27-2 (CA) (880)														
	S7-15	W34C (CA)										1				
	S7-16	W3-3											1			
	S7-17	W34C (CA)										1				
	S7-18	W3-3											1			
SUBTOTAL								0	0	98	0	10	13	1	0	

SIGN QUANTITIES
SQ-7

REVISED BY	DATE REVISED
LMH	11/22/11
HAC	5/18/11
HAC	4/20/11

HEATHER A. CHARLES
SEAN A. CHARLES
CALCULATED-DESIGNED BY
CHECKED BY
TIMOTHY J. LEE
CONSULTANT FUNCTIONAL SUPERVISOR

STATE OF CALIFORNIA - DEPARTMENT OF TRANSPORTATION
Caltrans

X:\880_Marina-Davis\000_CAD\Sheets\0000_Final PSE-Elec CADD Submittal\Final_Submittal_20111227\880MDRefMerge_20111226\EA04-3g9211_CADD-SUBMITTAL_20111227\43g921oc007.dgn

LAST REVISION 11-16-11
DATE PLOTTED => 20-APR-2012
TIME PLOTTED => 07:12

Dist	COUNTY	ROUTE	POST MILES TOTAL PROJECT	SHEET No.	TOTAL SHEETS
04	Ala	880	22.6/24.0	438	760

REGISTERED CIVIL ENGINEER 11-16-11 DATE

4-16-12
PLANS APPROVAL DATE

REGISTERED PROFESSIONAL ENGINEER SEAN A. CHARLES No. C50767 Exp. 9-30-13 CIVIL STATE OF CALIFORNIA

THE STATE OF CALIFORNIA OR ITS OFFICERS OR AGENTS SHALL NOT BE RESPONSIBLE FOR THE ACCURACY OR COMPLETENESS OF SCANNED COPIES OF THIS PLAN SHEET.

WMH CORPORATION
555 12th St
Suite 1900
Oakland, CA 94607

ACTC
1333 Broadway
Suites 220 & 300
Oakland, CA 94612

ROADSIDE SIGN QUANTITIES (CONT)

SHEET No.	SIGN No.	SIGN CODE	POST SIZE AND LENGTH 4" x 4"	4" x 6"	6" x 6"	6" x 8"	Type L	ROADSIDE SIGN (WOOD POST) ONE POST	TWO POST	METAL (BARRIER MOUNTED SIGN)	INSTALL ROADSIDE SIGN PANEL ON EXISTING POST	REMOVE ROADSIDE SIGN	RELOCATE ROADSIDE SIGN ONE POST	TWO POST	SSBM	REMARKS
								EA		LB			EA			
S-7	S7-19	W34B										1				BRIDGE MOUNTED
	S7-20	W34B										1				BRIDGE MOUNTED
	S7-21	W34B										1				BRIDGE MOUNTED
	S7-22	W4-1											1			
	S7-23	R89-1 (CA) R10-6													1	MOUNT TO RAMP METERING
	S7-24	R89-1 (CA) R10-6													1	MOUNT TO RAMP METERING
	S7-25	R91-3 (CA)											1			
	S7-26	R5-10a											1			
	S7-27	R91-3 (CA)											1			
	S7-28	M6-2 M3-3 G92 (CA) G27-2 (CA) (880)											1			
	S7-29	R2-1 (35) R48-1 (CA)											1			
	S7-30	G20-5 (CA)												1		
	S7-31	W34B										1				BRIDGE MOUNTED
	S7-32	W34C (CA)										1				
	S7-33	M6-2 M3-3 G92 (CA) G27-2 (CA) (880)											1			
	S7-34	W12-2										1				
	S7-35	R89-1 (CA) R10-6													1	MOUNT TO RAMP METERING
	S7-36	S32 (CA) S32-1 (CA)											1			
	S7-37	R91-3 (CA)											1			
	S7-38	R61-9 (CA)											1			
	S7-39	W3-3 (CA)											1			
	S7-40	G77-1 (CA) G8-1 (CA) G66-12												1		
	S7-41	R5-10a											1			
	S7-42	R89-1 (CA) R10-6													1	MOUNT TO RAMP METERING
	S7-43	R91-3 (CA)											1			
SUBTOTAL								0	0	0	0	6	13	2	4	

SIGN QUANTITIES
SQ-8

REVISED BY	DATE REVISED
LMH	11/22/11
HAC	5/18/11
HAC	4/20/11

HEATHER A. CHARLES — CALCULATED-DESIGNED BY
SEAN A. CHARLES — CHECKED BY
TIMOTHY J. LEE — CONSULTANT FUNCTIONAL SUPERVISOR

STATE OF CALIFORNIA - DEPARTMENT OF TRANSPORTATION
Caltrans

X:\880_Marina-Davis\000_CAD\Sheets\0000_Final\PSE-Elec\ADDSubmittal\Final_Submittal_20111227\880MDRefMerge_20111226\EA04-3g9211_CADD-SUBMITTAL_20111227\43g921oc008.dgn

LAST REVISION 11-16-11 | DATE PLOTTED => 20-APR-2012 | TIME PLOTTED => 07:12

Dist	COUNTY	ROUTE	POST MILES TOTAL PROJECT	SHEET No.	TOTAL SHEETS
04	Ala	880	22.6/24.0	439	760

REGISTERED CIVIL ENGINEER 11-16-11 DATE

4-16-12
PLANS APPROVAL DATE

REGISTERED PROFESSIONAL ENGINEER SEAN A. CHARLES No. C50767 Exp. 9-30-13 CIVIL STATE OF CALIFORNIA

THE STATE OF CALIFORNIA OR ITS OFFICERS OR AGENTS SHALL NOT BE RESPONSIBLE FOR THE ACCURACY OR COMPLETENESS OF SCANNED COPIES OF THIS PLAN SHEET.

WMH CORPORATION
555 12th St
Suite 1900
Oakland, CA 94607

ACTC
1333 Broadway
Suites 220 & 300
Oakland, CA 94612

ROADSIDE SIGN QUANTITIES (CONT)

SHEET No.	SIGN No.	SIGN CODE	POST SIZE AND LENGTH 4" x 4"	4" x 6"	6" x 6"	6" x 8"	Type L	ROADSIDE SIGN (WOOD POST) ONE POST	TWO POST	METAL (BARRIER MOUNTED SIGN)	INSTALL ROADSIDE SIGN PANEL ON EXISTING POST	REMOVE ROADSIDE SIGN	RELOCATE ROADSIDE SIGN ONE POST	TWO POST	SSBM	REMARKS
								EA		LB			EA			
S-7	S7-44	R5-10a														
	S7-45	R3-1											1			
	S7-46	W11-2													1	MOUNT TO ELECTROLIER
	S7-47	W12-2										1				
	S7-48	M3-3 G92 (CA) G27-2 (CA) (880)											1			
	S7-49	R6-1 R6-1										1				SIGN PANELS MOUNTED BACK TO BACK
	S7-50	R91-3 (CA)											1			
	S7-51	R6-1										1				
	S7-52	R5-1 R5-1a											1			
	S7-53	R13A (CA) W11-2									1		1			
	S7-54	R8-4 (CA)											1			
	S7-55	R6-1										1				
	S7-56	W4-10 (CA) (15)		13.8′				1								
	S7-57	W11-2	11.3′					1								
	S7-58	W11-2	11.3′					1								
	S7-59	G20-5 (CA)				17.8′										
S-8	S8-1	R3-7										1				
	S8-2	W4-7										1				
S-9	S9-1	W12-2										1				
	S9-2	G84-2 (CA) (34)	11.6′					1								
	S9-3	G84-2 (CA)										1				
	S9-4	R93-2 (CA)								50						
	S9-5	R18A (CA)											1			
	S9-6	W13-2 (CA) (35)											1			
SHEET SQ-9 SUBTOTAL								4	1	50	1	8	8	0	1	
SHEET SQ-8 SUBTOTAL								0	0	0	0	6	13	2	4	
SHEET SQ-7 SUBTOTAL								0	0	98	0	10	13	1	0	
SHEET SQ-6 SUBTOTAL								6	2	98	4	6	10	4	0	
SHEET SQ-5 SUBTOTAL								4	1	50	0	7	7	5	0	
SHEET SQ-4 SUBTOTAL								2	0	0	2	8	9	0	3	
TOTAL								16	4	296	7	45	60	12	8	

SIGN QUANTITIES
SQ-9

LMH	HAC	HAC	REVISED BY	HEATHER A. CHARLES	CALCULATED-DESIGNED BY	CONSULTANT FUNCTIONAL SUPERVISOR	TIMOTHY J. LEE
11/22/11	5/18/11	4/20/11	DATE REVISED	SEAN A. CHARLES	CHECKED BY		

STATE OF CALIFORNIA - DEPARTMENT OF TRANSPORTATION
Caltrans

X:\880_Marina-Davis\000_CAD\Sheets\0000_Final PSE-ElecCADDSubmittal\Final_Submittal_20111227\880MDRefMerge_20111226\EA04-3g9211_CADD-SUBMITTAL_20111227\43g921oc009.dgn

LAST REVISION 11-16-11 DATE PLOTTED => 20-APR-2012 TIME PLOTTED => 07:16

Dist	COUNTY	ROUTE	POST MILES TOTAL PROJECT	SHEET No.	TOTAL SHEETS
04	Ala	880	22.6/24.0	440	760

B. Razeghi 11-16-11
REGISTERED CIVIL ENGINEER DATE

4-16-12
PLANS APPROVAL DATE

REGISTERED PROFESSIONAL ENGINEER B. RAZEGHI No. C52725 Exp. 12-31-12 CIVIL STATE OF CALIFORNIA

THE STATE OF CALIFORNIA OR ITS OFFICERS OR AGENTS SHALL NOT BE RESPONSIBLE FOR THE ACCURACY OR COMPLETENESS OF SCANNED COPIES OF THIS PLAN SHEET.

WMH CORPORATION
555 12th St
Suite 1900
Oakland, CA 94607

ACTC
1333 Broadway
Suites 220 & 300
Oakland, CA 94612

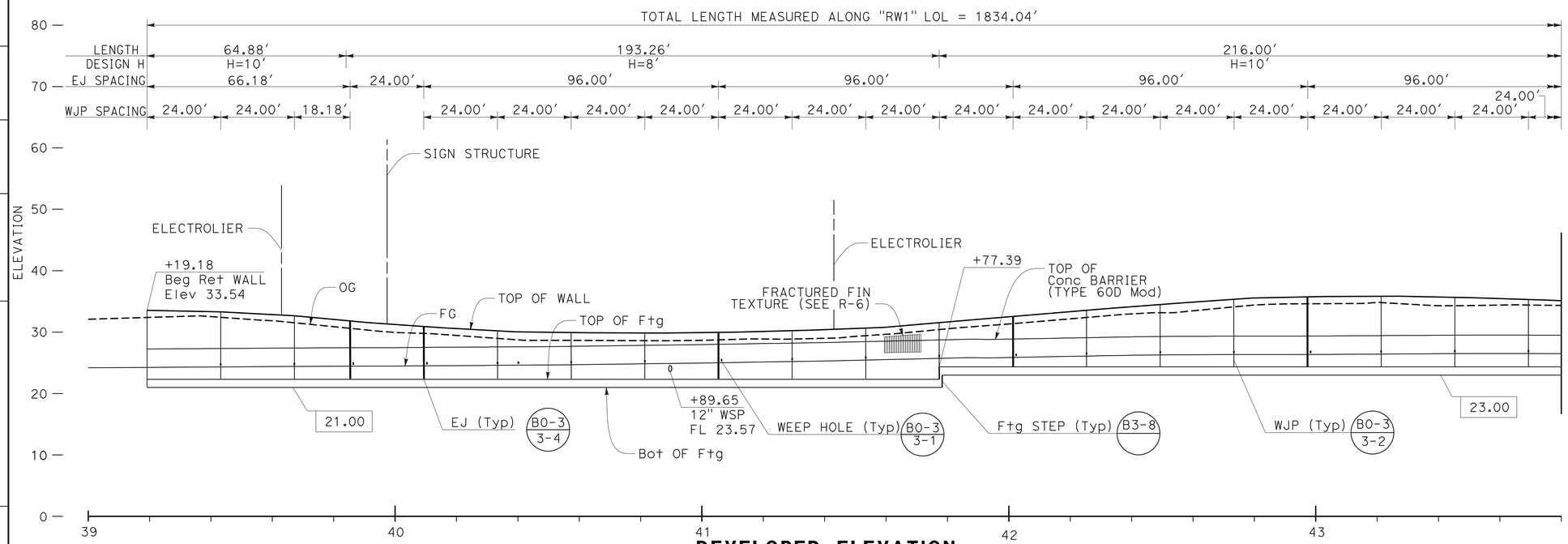

DEVELOPED ELEVATION

Horiz : 1" = 20'
Vert : 1" = 10'

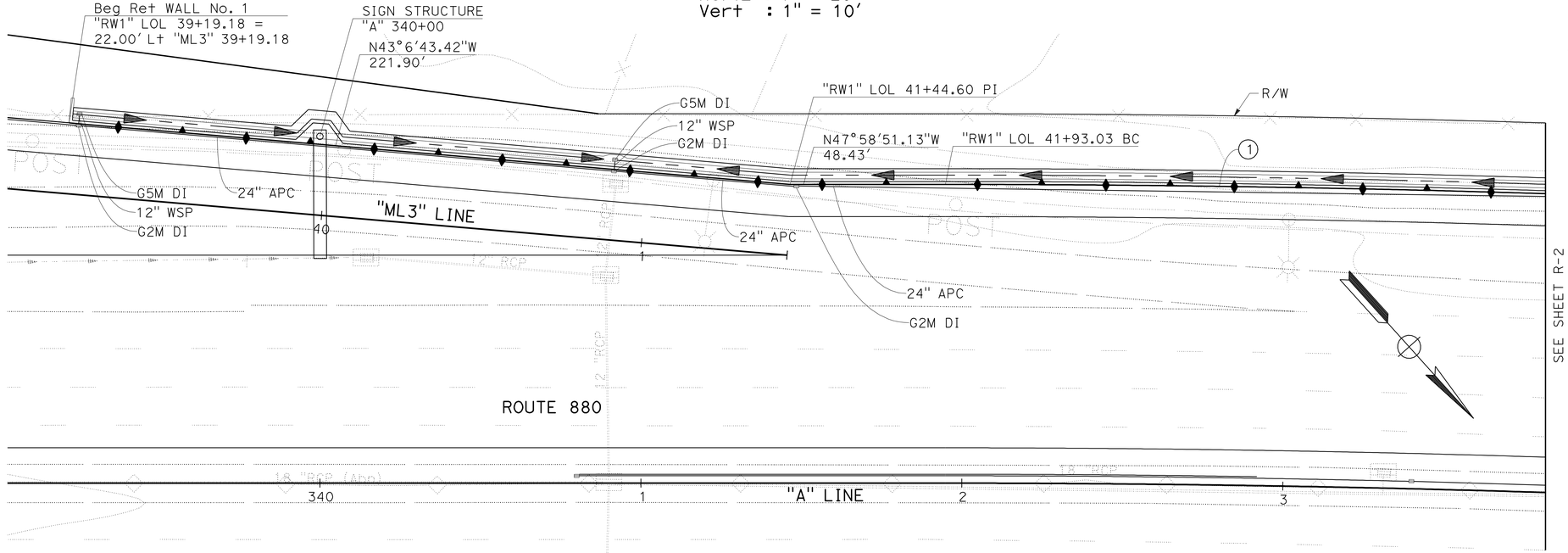

PLAN

SCALE : 1" = 20'

CURVE DATA

No.	R	Δ	T	L
1	6093.00'	3°57'42.70"	210.74'	421.23'

APPROVED FOR RETAINING WALL WORK ONLY

NOTE:

1. FOR CL FENCE POST POCKET, SEE Std PLAN B11-47.
2. FOR TOP OF WALL Elev, SEE Sht R-5.
3. FOR WALL TYPICAL CROSS SECTIONS, SEE Sht R-5.
4. USE OF Temp SHORING WILL BE REQUIRED TO AVOID IMPACT TO EXISTING STRUCTURES ALONG STATE RIGHT OF WAY.
5. FOR DRAINAGE SYSTEM, SEE DRAINAGE PLAN

ABBREVIATIONS:

EJ	EXPANSION JOINT
WJP	WEAKENED PLANE
CMS	CHANGEABLE MESSAGE SIGN
EF	EACH FACE

LEGEND:

STRUCTURE EXCAVATION AND BACKFILL WITH LCB

XX.XX Elev AT BOTTOM OF FOOTING

RETAINING WALL No. 1

RETAINING WALL PLAN

SCALE: AS SHOWN

R-1

STATE OF CALIFORNIA - DEPARTMENT OF TRANSPORTATION
Caltrans

CONSULTANT FUNCTIONAL SUPERVISOR: TIMOTHY J. LEE
CALCULATED-DESIGNED BY: BEN RAZEGHI
CHECKED BY
REVISED BY: GKS
DATE REVISED: 12/14/11
E. ANJORIN

X:\880_Marina-Davis\0000_CAD\Sheets\0000_Final\PSE-Elec\ADDSubmittal\Final_Submittal_20111227\880MDRefMerge_20111226\EA04-3g9211_CADD-SUBMITTAL_20111227\43g921qa001.dgn

LAST REVISION 11-16-11 DATE PLOTTED => 19-APR-2012 TIME PLOTTED => 8:05

Dist	COUNTY	ROUTE	POST MILES TOTAL PROJECT	SHEET No.	TOTAL SHEETS
04	Ala	880	22.6/24.0	441	760

REGISTERED CIVIL ENGINEER 11-16-11 DATE

4-16-12
PLANS APPROVAL DATE

REGISTERED PROFESSIONAL ENGINEER B. RAZEGHI No. C52725 Exp. 12-31-12 CIVIL STATE OF CALIFORNIA

THE STATE OF CALIFORNIA OR ITS OFFICERS OR AGENTS SHALL NOT BE RESPONSIBLE FOR THE ACCURACY OR COMPLETENESS OF SCANNED COPIES OF THIS PLAN SHEET.

WMH CORPORATION
555 12th St
Suite 1900
Oakland, CA 94607

ACTC
1333 Broadway
Suites 220 & 300
Oakland, CA 94612

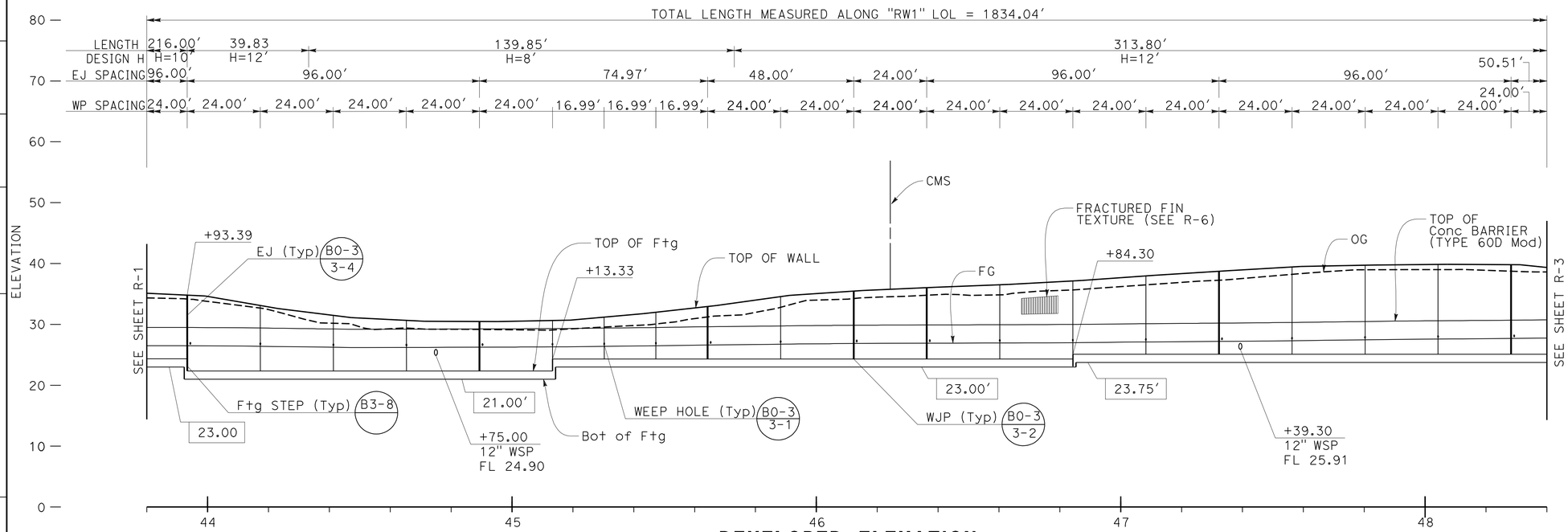

DEVELOPED ELEVATION

Horiz : 1" = 20'
Vert : 1" = 10'

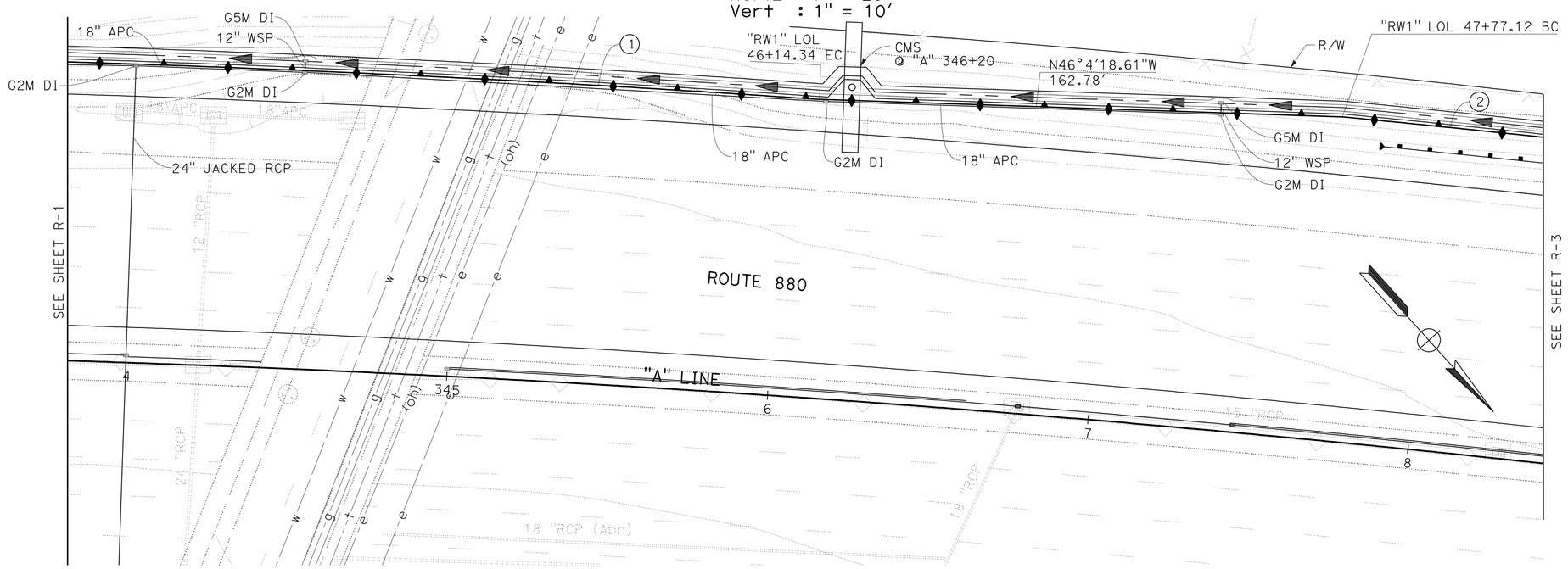

PLAN

SCALE : 1" = 20'

CURVE DATA

No.	R	Δ	T	L
1	6093.00'	3°57'42.70"	210.74'	421.23'
2	6101.00'	0°56'20.84"	50.84'	101.68'

APPROVED FOR RETAINING WALL WORK ONLY

RETAINING WALL No. 1

RETAINING WALL PLAN

SCALE: AS SHOWN

R-2

STATE OF CALIFORNIA - DEPARTMENT OF TRANSPORTATION

Caltrans

CONSULTANT FUNCTIONAL SUPERVISOR: TIMOTHY J. LEE

CALCULATED-DESIGNED BY: E. ANJORIN

CHECKED BY: BEN RAZEGHI

REVISED BY: GKS

DATE REVISED: 12/14/11

X:\880_Marina-Davis\000_CAD\Sheets\0000_FinalPSE-ElecCADDSubmittal\Final_Submittal_20111227\880MDRefMerge_20111226\EA04-309211_CADD-SUBMITTAL_20111227\43a921qa002.dgn

LAST REVISION 11-16-11 DATE PLOTTED => 19-APR-2012 TIME PLOTTED => 18:06

Dist	COUNTY	ROUTE	POST MILES TOTAL PROJECT	SHEET No.	TOTAL SHEETS
04	Ala	880	22.6/24.0	442	760

REGISTERED CIVIL ENGINEER 11-16-11 DATE

4-16-12
PLANS APPROVAL DATE

REGISTERED PROFESSIONAL ENGINEER B. RAZEGHI No. C52725 Exp. 12-31-12 CIVIL STATE OF CALIFORNIA

THE STATE OF CALIFORNIA OR ITS OFFICERS OR AGENTS SHALL NOT BE RESPONSIBLE FOR THE ACCURACY OR COMPLETENESS OF SCANNED COPIES OF THIS PLAN SHEET.

WMH CORPORATION
555 12th St
Suite 1900
Oakland, CA 94607

ACTC
1333 Broadway
Suites 220 & 300
Oakland, CA 94612

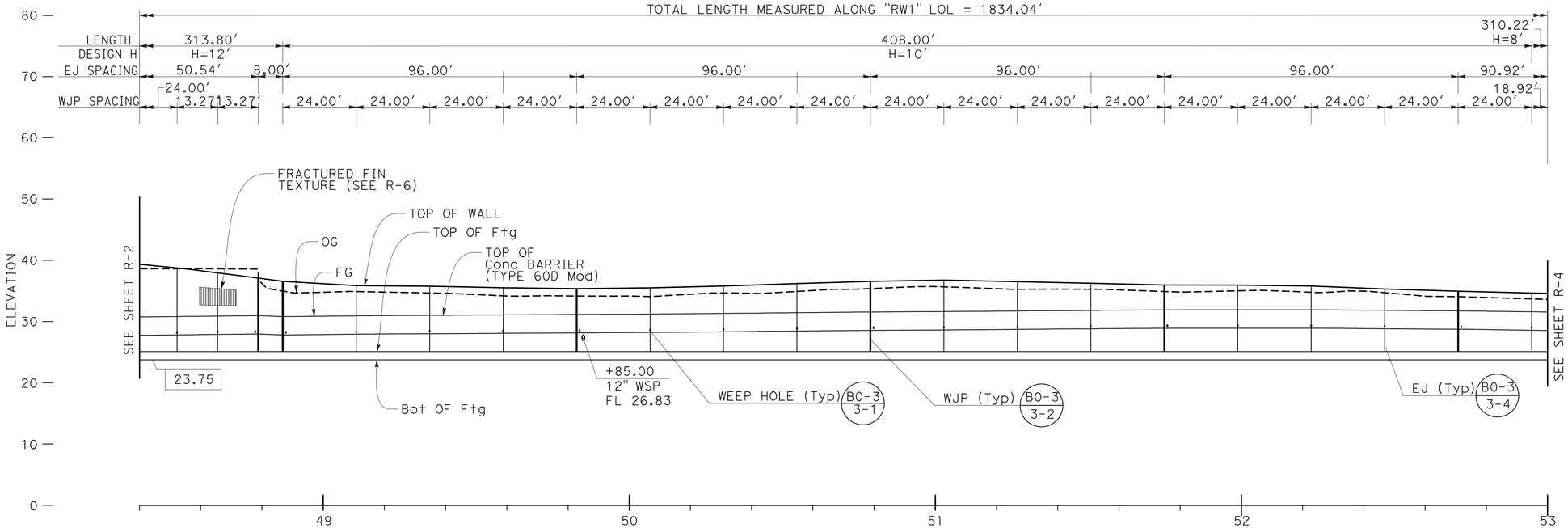

DEVELOPED ELEVATION

Horiz : 1" = 20'
Vert : 1" = 10'

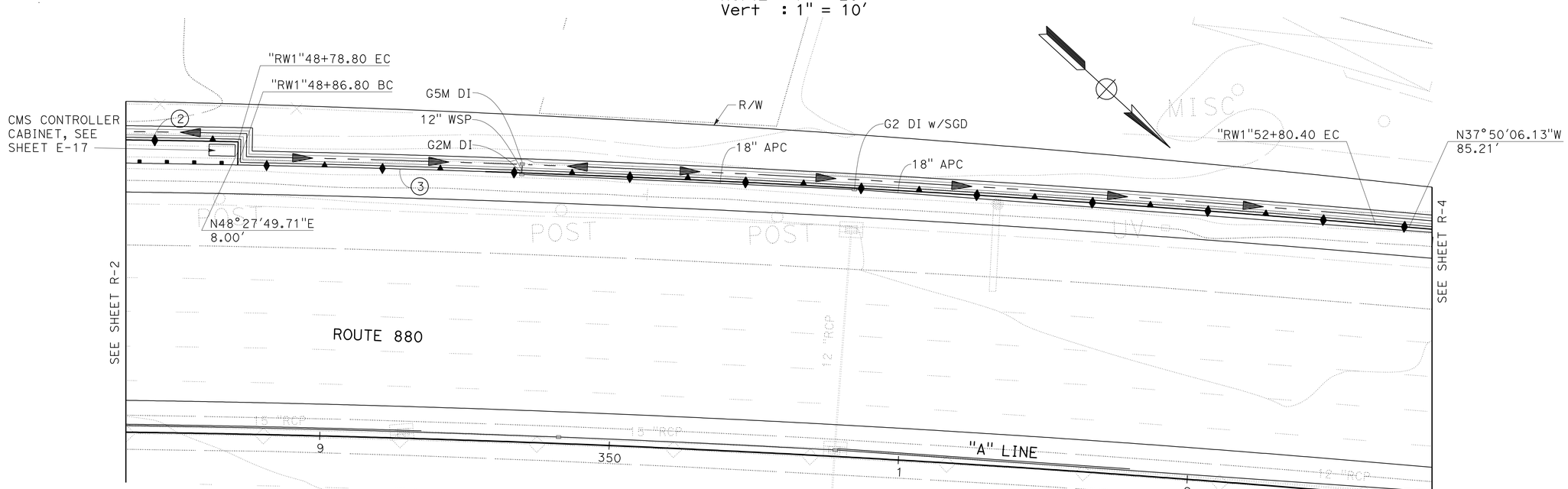

PLAN

SCALE : 1" = 20'

CURVE DATA

No.	R	Δ	T	L
2	6101.00'	0°56'20.84"	50.84'	101.68'
3	6093.00'	3°42'04.16"	196.86'	393.59'

APPROVED FOR RETAINING WALL WORK ONLY

RETAINING WALL No. 1

RETAINING WALL PLAN

SCALE: AS SHOWN

R-3

STATE OF CALIFORNIA - DEPARTMENT OF TRANSPORTATION
Caltrans

CONSULTANT FUNCTIONAL SUPERVISOR: TIMOTHY J. LEE
CALCULATED-DESIGNED BY: E. ANJORIN
CHECKED BY: BEN RAZEGHI
REVISED BY: GKS
DATE REVISED: 12/14/11

X:\880_Marina-Davis\000_CAD\Sheets\0000_Final PSE-Elec CADDSubmittal\Final_Submittal_20111227\880MDRefMerge_20111226\EA04-3g9211_CADD-SUBMITTAL_20111227\43g921qa003.dgn

LAST REVISION 11-16-11
DATE PLOTTED => 19-APR-2012
TIME PLOTTED => 18:06

Dist	COUNTY	ROUTE	POST MILES TOTAL PROJECT	SHEET No.	TOTAL SHEETS
04	Ala	880	22.6/24.0	443	760

B. Razeghi 11-16-11
REGISTERED CIVIL ENGINEER DATE

4-16-12
PLANS APPROVAL DATE

REGISTERED PROFESSIONAL ENGINEER B. RAZEGHI No. C52725 Exp. 12-31-12 CIVIL STATE OF CALIFORNIA

THE STATE OF CALIFORNIA OR ITS OFFICERS OR AGENTS SHALL NOT BE RESPONSIBLE FOR THE ACCURACY OR COMPLETENESS OF SCANNED COPIES OF THIS PLAN SHEET.

WMH CORPORATION
555 12th St
Suite 1900
Oakland, CA 94607

ACTC
1333 Broadway
Suites 220 & 300
Oakland, CA 94612

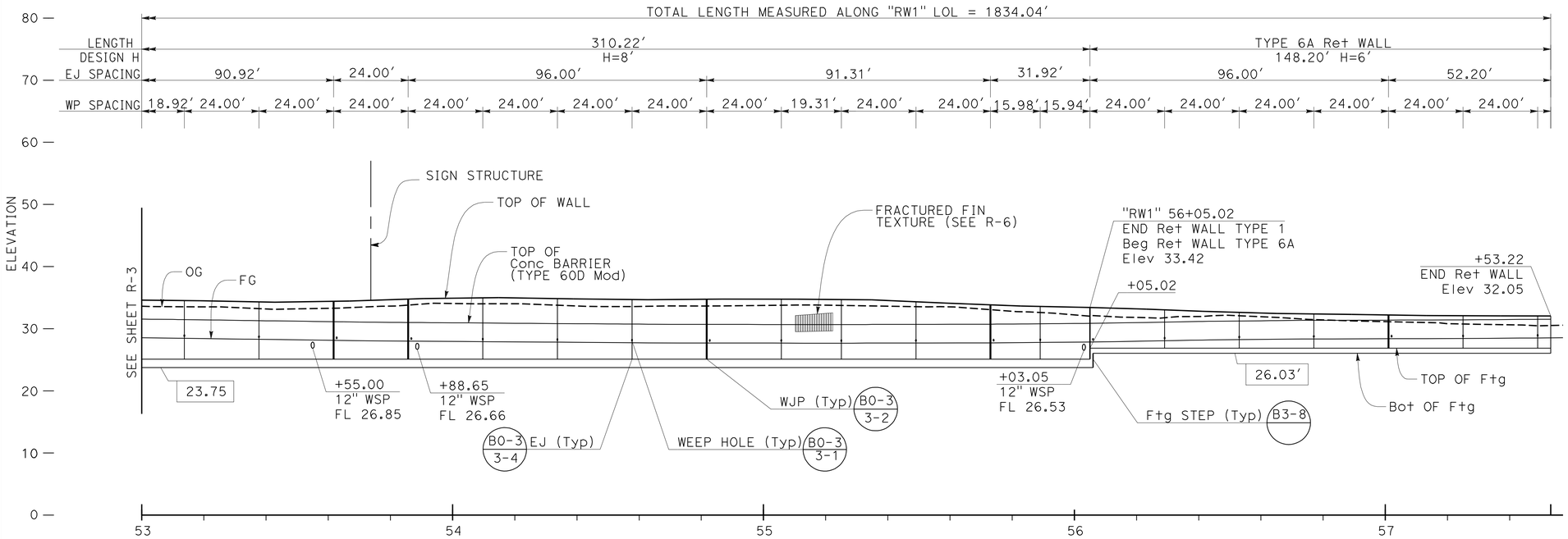

DEVELOPED ELEVATION

Horiz : 1" = 20'
Vert : 1" = 10'

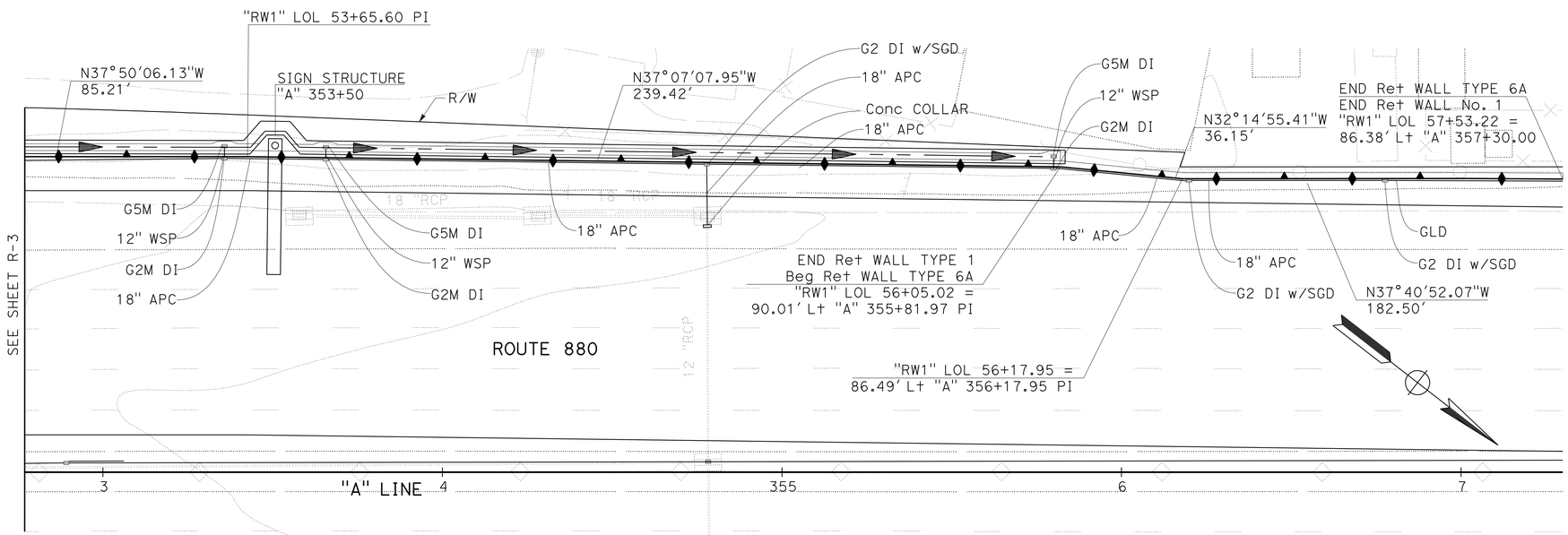

PLAN

SCALE : 1" = 20'

APPROVED FOR RETAINING WALL WORK ONLY

RETAINING WALL No. 1

RETAINING WALL PLAN

SCALE: AS SHOWN

R-4

STATE OF CALIFORNIA - DEPARTMENT OF TRANSPORTATION
Caltrans

CONSULTANT FUNCTIONAL SUPERVISOR: TIMOTHY J. LEE
CALCULATED-DESIGNED BY: E. ANJORIN
CHECKED BY: BEN RAZEGHI
REVISED BY: GKS
DATE REVISED: 12/14/11

X:\880_Marina-Davis\000_CAD\Sheets\0000_Final\PSE-Elec\ADDSubmittal\Final_Submittal_20111227\880MDRefMerge_20111226\EA04-3g9211_CADD-SUBMITTAL_20111227\43g921qa004.dgn

LAST REVISION 11-16-11 | DATE PLOTTED => 19-APR-2012 | TIME PLOTTED => 8:06

Dist	COUNTY	ROUTE	POST MILES TOTAL PROJECT	SHEET No.	TOTAL SHEETS
04	Ala	880	22.6/24.0	444	760

B. Razeghi 11-16-11
REGISTERED CIVIL ENGINEER DATE

4-16-12
PLANS APPROVAL DATE

REGISTERED PROFESSIONAL ENGINEER B. RAZEGHI No. C52725 Exp. 12-31-12 CIVIL STATE OF CALIFORNIA

THE STATE OF CALIFORNIA OR ITS OFFICERS OR AGENTS SHALL NOT BE RESPONSIBLE FOR THE ACCURACY OR COMPLETENESS OF SCANNED COPIES OF THIS PLAN SHEET.

WMH CORPORATION
555 12th St
Suite 1900
Oakland, CA 94607

ACTC
1333 Broadway
Suites 220 & 300
Oakland, CA 94612

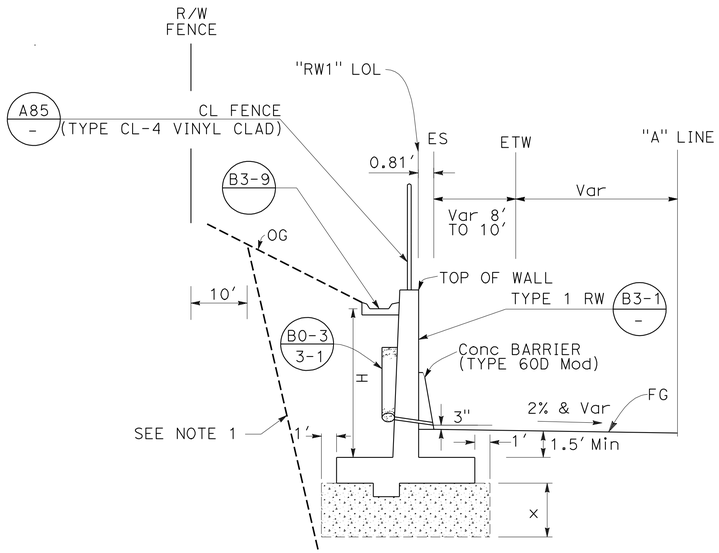

"RW1" LOL 39+19.18 TO 56+05.02

TYPICAL SECTION

NO SCALE

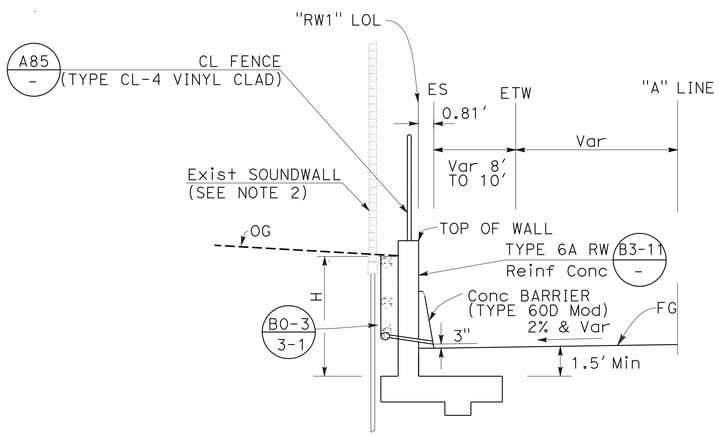

"RW1" LOL 56+05.02 TO 57+53.22

TYPICAL SECTION

NO SCALE

STRUCTURE EXCAVATION AND BACKFILL WITH LCB

STATION FROM	STATION TO	H	X
39+19	47+21	6', 8' & 10'	0'
		12'	3.5'
47+21	57+54	6'	0'
		8' & 10'	2'
		12'	3.5'

TOP OF WALL Elev

Sta	Elev	Sta	Elev
39+19.18	33.54	48+86.80	36.58
39+50.00	33.12	49+00.00	36.19
40+00.00	31.25	49+50.00	35.61
40+50.00	29.98	49+72.32	35.43
40+87.20	29.85	49+82.93	35.36
41+00.00	29.93	50+00.00	35.46
41+44.60	30.50	50+50.00	36.11
41+50.00	30.60	51+00.00	36.74
42+00.00	32.50	51+50.00	36.25
42+50.00	34.52	51+74.83	35.98
43+00.00	35.77	52+00.00	35.93
43+50.00	35.62	52+50.00	35.27
44+00.00	34.60	53+00.00	34.61
44+50.00	31.06	53+32.93	34.36
44+54.45	30.95	53+50.00	34.32
45+00.00	30.53	54+00.00	34.91
45+50.00	32.15	54+50.00	34.74
46+00.00	35.06	54+62.86	34.67
46+14.34	35.55	55+00.00	34.76
46+50.00	36.31	55+50.00	34.32
47+00.00	37.67	56+00.00	33.47
47+50.00	39.26	56+05.02	33.42
47+77.12	39.70	56+41.17	32.80
48+00.00	39.84	56+50.00	32.67
48+50.00	38.86	57+00.00	32.21
48+67.69	37.80	57+50.00	32.06
48+78.80	37.09	57+53.22	32.05

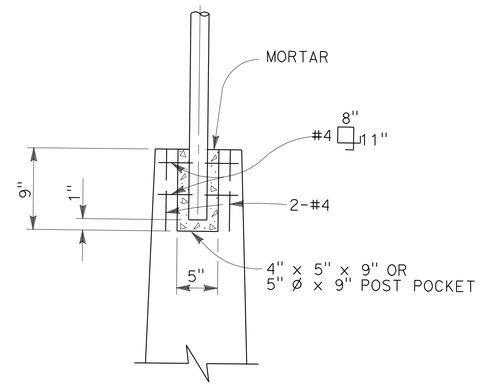

FENCE POST POCKET

NO SCALE

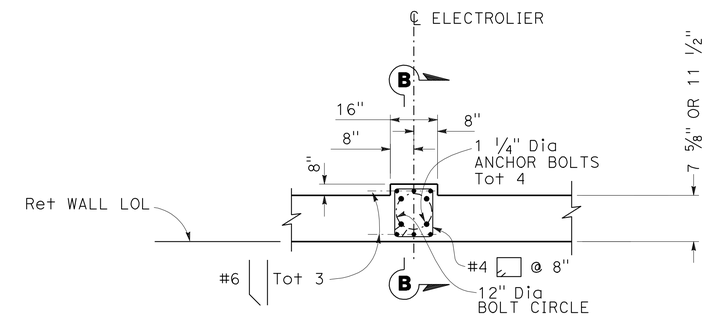

ELECTROLIER ANCHOR

NO SCALE

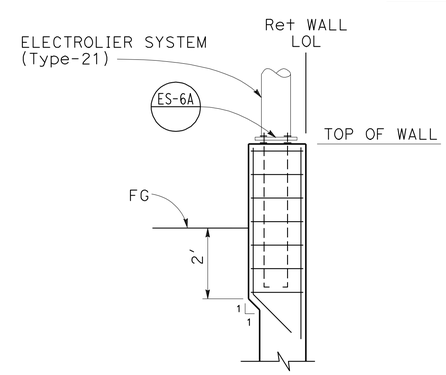

SECTION B-B

NO SCALE

NOTES:

1. CUTTING BACK EXISTING SLOPE FOR WALL CONSTRUCTION SHALL NOT BE CLOSER THAN 10' TO THE RIGHT OF WAY FENCE.

2. USE OF TEMPORARY SHORING MAY BE REQUIRED ALONG EXISTING SOUND WALL. TO AVOID DAMAGE TO EXISTING SOUND WALL, RETAINING WALL CONSTRUCTION SHALL BE LIMITED TO A MAXIMUM OF 50' LONG SEGMENT AT A TIME.

APPROVED FOR RETAINING WALL WORK ONLY

RETAINING WALL No. 1

RETAINING WALL PLAN

SCALE: AS SHOWN **R-5**

STATE OF CALIFORNIA - DEPARTMENT OF TRANSPORTATION
Caltrans
CONSULTANT FUNCTIONAL SUPERVISOR: TIMOTHY J. LEE
CALCULATED-DESIGNED BY: E. ANJORIN
CHECKED BY: BEN RAZEGHI
REVISED BY: BE
DATE REVISED: 6/01/11
GRS 12/13/10

X:\880_Marina-Davis\000_CAD\Sheets\0000_Final PSE-ElecCADDSubmittal\Final_Submittal_20111227\880MDRefMerge_20111226\EA04-3g9211_CADD-SUBMITTAL_20111227\43g921qa005.dgn

LAST REVISION 11-16-11
DATE PLOTTED => 19-APR-2012
TIME PLOTTED => 18:06

Dist	COUNTY	ROUTE	POST MILES TOTAL PROJECT	SHEET No.	TOTAL SHEETS
04	Ala	880	22.6/24.0	445	760

REGISTERED CIVIL ENGINEER 11-16-11 DATE

4-16-12
PLANS APPROVAL DATE

REGISTERED PROFESSIONAL ENGINEER B. RAZEGHI No. C52725 Exp. 12-31-12 CIVIL STATE OF CALIFORNIA

THE STATE OF CALIFORNIA OR ITS OFFICERS OR AGENTS SHALL NOT BE RESPONSIBLE FOR THE ACCURACY OR COMPLETENESS OF SCANNED COPIES OF THIS PLAN SHEET.

WMH CORPORATION
555 12th St
Suite 1900
Oakland, CA 94607

ACTC
1333 Broadway
Suites 220 & 300
Oakland, CA 94612

NOTE:

WHERE Conc BARRIER TYPE 60D IS INVOLVED, STOP FRACTURED GRANITE TEXTURE AT THE TOP OF BARRIER.

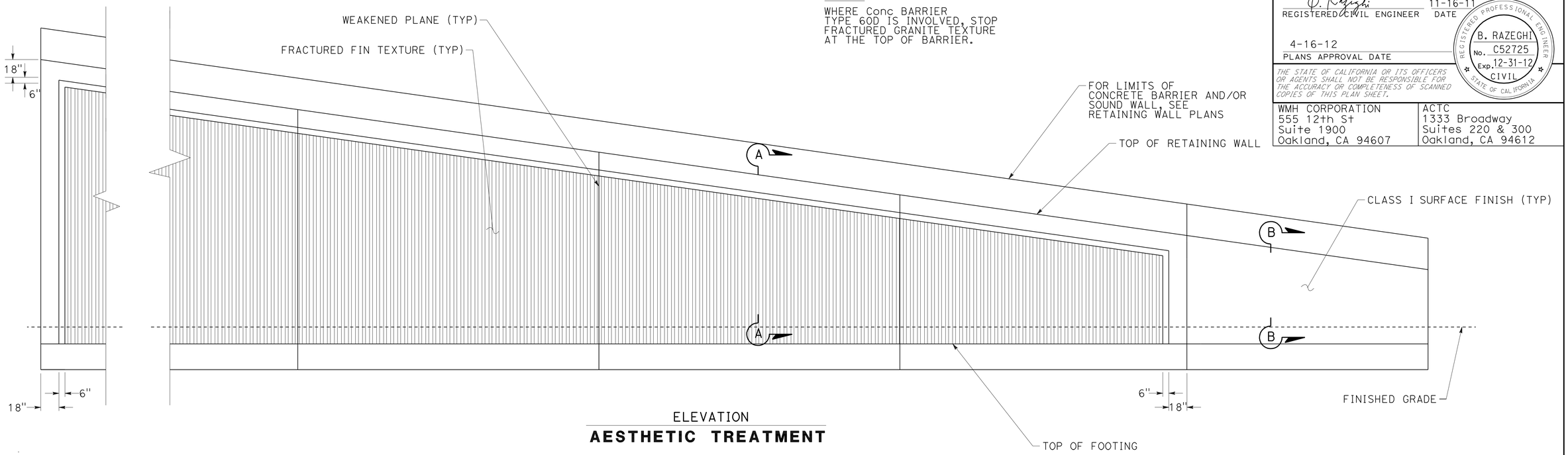

ELEVATION
AESTHETIC TREATMENT

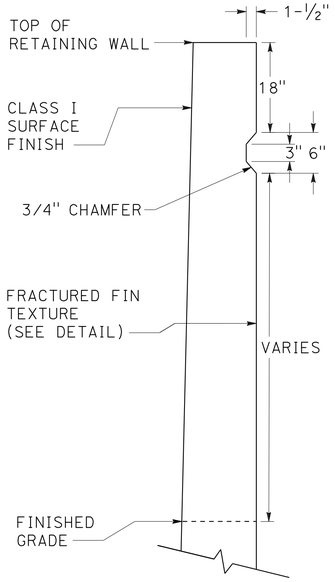

SECTION A-A

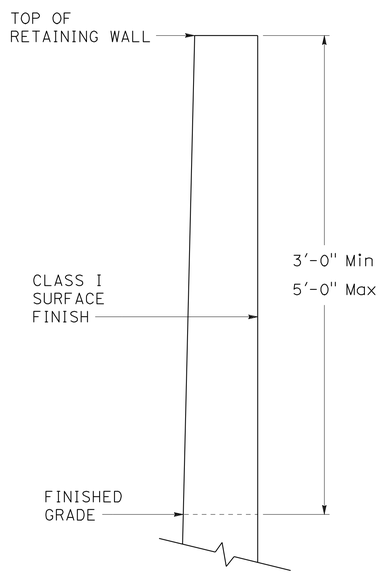

SECTION B-B

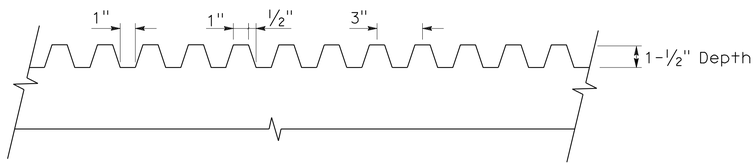

DETAIL
FRACTURED FIN TEXTURE

APPROVED FOR RETAINING WALL WORK ONLY

RETAINING WALL PLAN
AESTHETIC TREATMENT
R-6

REVISED BY	DATE REVISED
GKS	11/20/11
BE	6/1/11
GKS	12/14/11

CALCULATED-DESIGNED BY: E. ANJORIN
CHECKED BY: BEN RAZEGHI
CONSULTANT FUNCTIONAL SUPERVISOR: TIMOTHY J. LEE

STATE OF CALIFORNIA - DEPARTMENT OF TRANSPORTATION
Caltrans

X:\880_Marina-Davis\000_CAD\Sheets\0000_Final\PSE-Elec\ADDSubmittal\Final_Submittal_20111227\880MDRefMerge_20111226\EA04-3g921_CADD-SUBMITTAL_20111227\43g921qa006.dgn

LAST REVISION 11-16-11 | DATE PLOTTED => 19-APR-2012 | TIME PLOTTED => 18:06

Dist	COUNTY	ROUTE	POST MILES TOTAL PROJECT	SHEET No.	TOTAL SHEETS
04	Ala	880	22.6/24.0	446	760

REGISTERED CIVIL ENGINEER 11-16-11 DATE

4-16-12
PLANS APPROVAL DATE

REGISTERED PROFESSIONAL ENGINEER B. RAZEGHI No. C52725 Exp. 12-31-12 CIVIL STATE OF CALIFORNIA

THE STATE OF CALIFORNIA OR ITS OFFICERS OR AGENTS SHALL NOT BE RESPONSIBLE FOR THE ACCURACY OR COMPLETENESS OF SCANNED COPIES OF THIS PLAN SHEET.

WMH CORPORATION
555 12th St
Suite 1900
Oakland, CA 94607

ACTC
1333 Broadway
Suites 220 & 300
Oakland, CA 94612

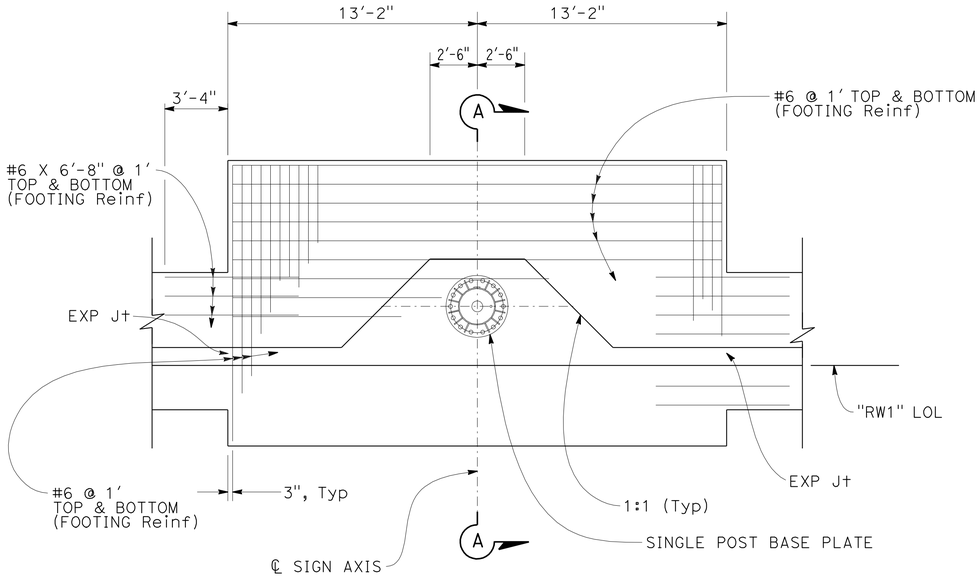

WALL PART PLAN AND FOOTING REINFORCEMENT FOR OVERHEAD SIGN

1" = 4'

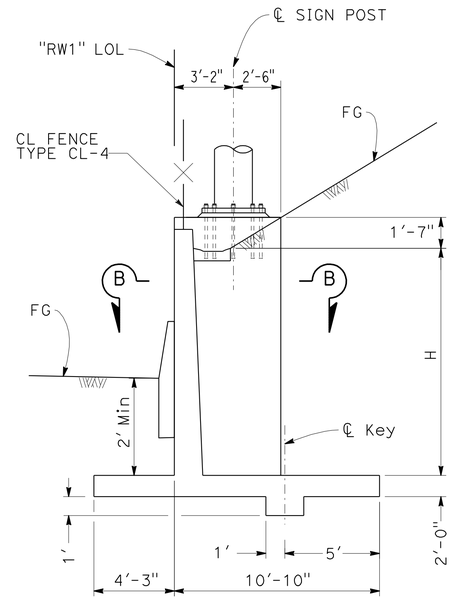

WALL SECTION FOR OVERHEAD SIGN

1" = 4'

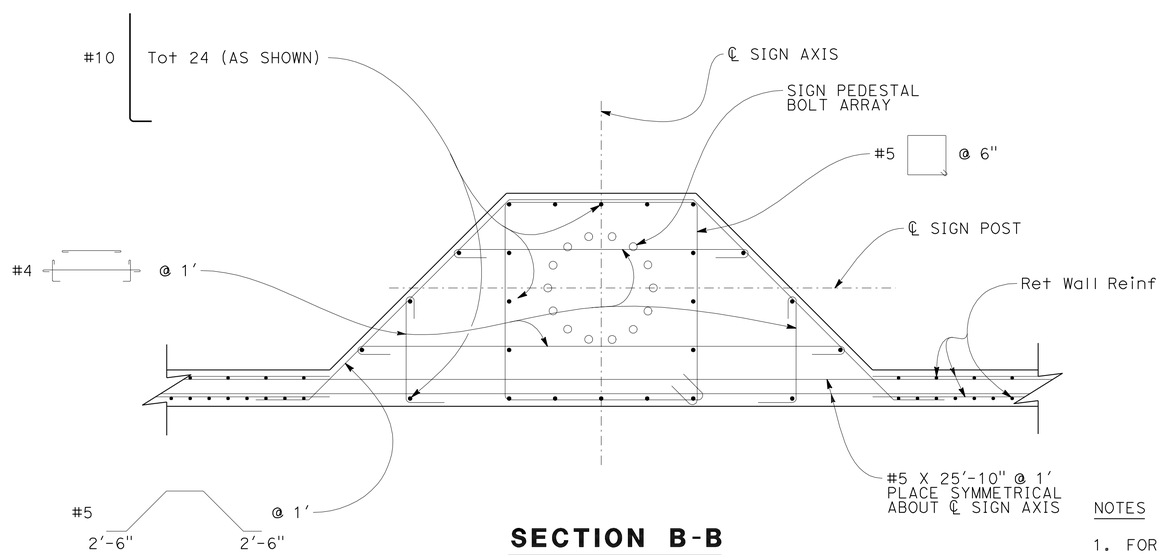

SECTION B-B

1" = 8'

NOTES

1. FOR SIGN LOCATIONS, SEE "ROAD PLANS".
2. FOR RETAINING WALL DESIGN "H", SEE "ROAD PLANS".
3. REINFORCING SHOWN IS IN ADDITION TO RETAINING WALL TYPE 1 REINFORCEMENT.

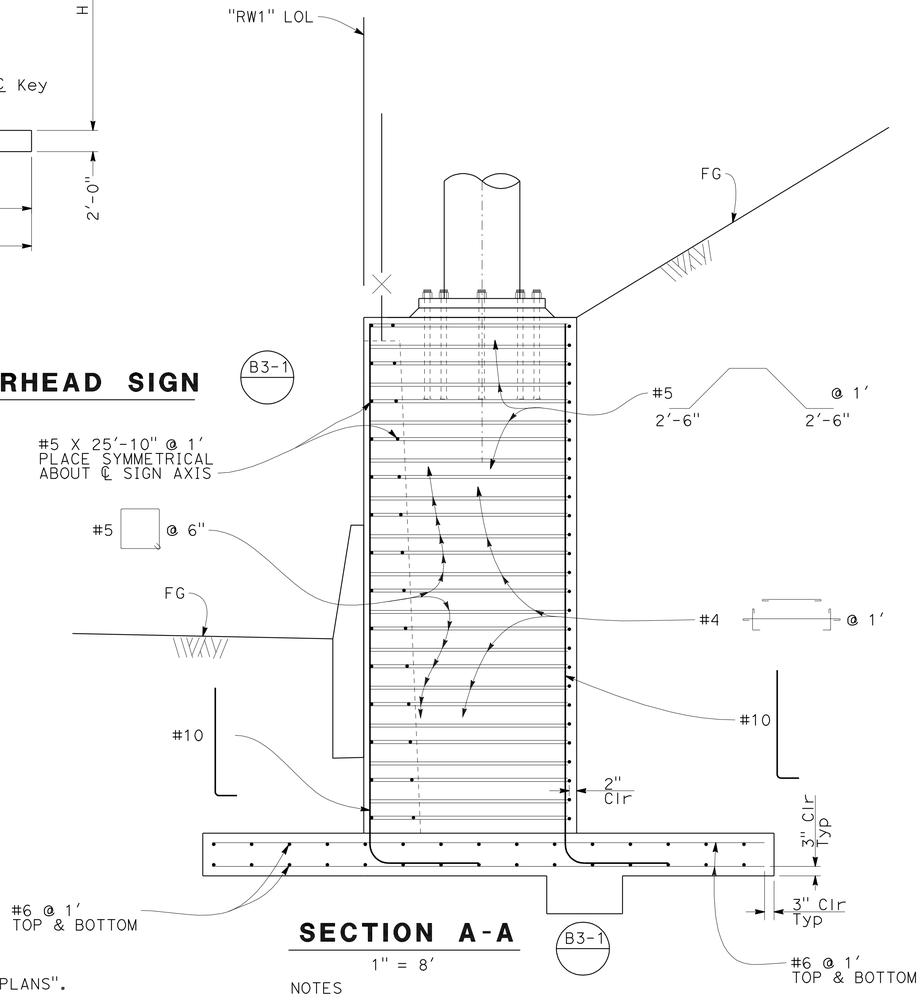

SECTION A-A

1" = 8'

B3-1

NOTES

RETAINING WALL Reinf ⓐ BAR, ⓑ BAR, AND ⓒ BARS NOT SHOWN FOR CLARITY.

RETAINING WALL PLAN
OVERHEAD SIGN ON RETAINING WALL
R-7

GKS	12/14/11	E. ANJORIN	BEN RAZEGHI
REVISED BY	DATE REVISED	CALCULATED-DESIGNED BY	CHECKED BY

CONSULTANT FUNCTIONAL SUPERVISOR: TIMOTHY J. LEE

STATE OF CALIFORNIA - DEPARTMENT OF TRANSPORTATION

Caltrans

X:\880_Marina-Davis\0000_CAD\Sheets\0000_Final\PSE-Elec\ADDSubmittal\Final_Submittal_20111227\880MDRefMerge_20111226\EA04-3a9211_CADD-SUBMITTAL_20111227\43a921qa007.dgn

LAST REVISION 11-16-11 DATE PLOTTED => 19-APR-2012 TIME PLOTTED => 8:07

REFERENCE: CALTRANS SOIL & ROCK LOGGING, CLASSIFICATION, AND PRESENTATION MANUAL (2010)

DIST	COUNTY	ROUTE	POST MILES TOTAL PROJECT	SHEET No	TOTAL SHEETS
04	Ala	880	22.6/24.0	447	760

GEOTECHNICAL PROFESSIONAL — DATE 10/26/11

4-16-12
PLANS APPROVAL DATE

REGISTERED PROFESSIONAL ENGINEER — GARY PARIKH — No. G.E. 666 — Exp. 12/31/13 — GEOTECHNICAL — STATE OF CALIFORNIA

THE HNTB OR ITS OFFICERS OR AGENTS SHALL NOT BE RESPONSIBLE FOR THE ACCURACY OR COMPLETENESS OF SCANNED COPIES OF THIS PLAN SHEET.

ACTC
1333 BROADWAY, SUITES 220 & 300
OAKLAND, CA 94612

PARIKH CONSULTANTS, INC.
2360 QUME DRIVE, SUITE A
SAN JOSE, CA 95131

CEMENTATION

Description	Criteria
Weak	Crumbles or breaks with handling or little finger pressure.
Moderate	Crumbles or breaks with considerable finger pressure.
Strong	Will not crumble or break with finger pressure.

BOREHOLE IDENTIFICATION

Symbol	Hole Type	Description
Size	A	Auger Boring (hollow or solid stem bucket)
Size	R RW RC P	Rotary drilled boring (conventional) Rotary drilled with self-casing wire-line Rotary core with continuously-sampled, self-casing wire-line Rotary percussion boring (air)
Size	R	Rotary drilled diamond core
Size	HD HA	Hand driven (1-inch soil tube) Hand Auger
●	D	Dynamic Cone Penetration Boring
▲	CPT	Cone Penetration Test (ASTM D 5778)
⬚	O	Other (note on LOTB)

Note: Size in inches.

CONSISTENCY OF COHESIVE SOILS

Description	Shear Strength (tsf)	Pocket Penetrometer Measurement, PP, (tsf)	Torvane Measurement, TV, (tsf)	Vane Shear Measurement, VS, (tsf)
Very Soft	Less than 0.12	Less than 0.25	Less than 0.12	Less than 0.12
Soft	0.12 - 0.25	0.25 - 0.5	0.12 - 0.25	0.12 - 0.25
Medium Stiff	0.25 - 0.5	0.5 - 1	0.25 - 0.5	0.25 - 0.5
Stiff	0.5 - 1	1 - 2	0.5 - 1	0.5 - 1
Very Stiff	1 - 2	2 - 4	1 - 2	1 - 2
Hard	Greater than 2	Greater than 4	Greater than 2	Greater than 2

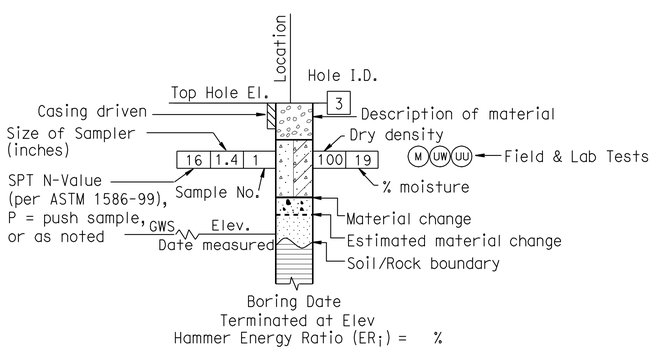

ROTARY BORING

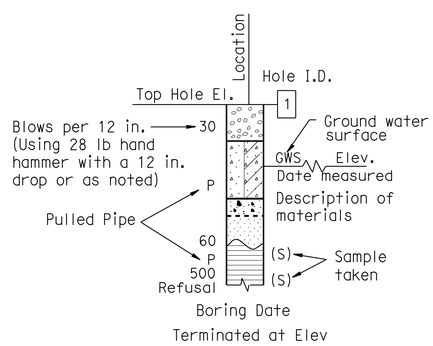

HAND BORING

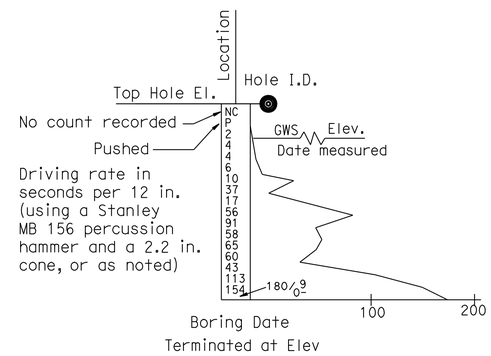

DYNAMIC CONE PENETRATION BORING

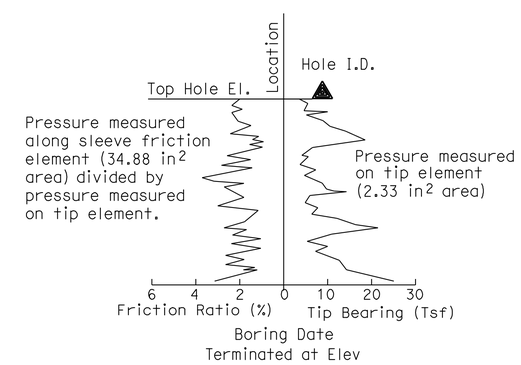

CONE PENETRATION TEST (CPT) BORING

SOIL LEGEND 1 OF 2

DESIGN OVERSIGHT	DRAWN BY	L. Tran	L. Bhangoo, G. Tripathi — FIELD INVESTIGATION BY:
SIGN OFF DATE	CHECKED BY	D. Wang	DATE: June 2008

PREPARED FOR THE STATE OF CALIFORNIA DEPARTMENT OF TRANSPORTATION

David Wang — PROJECT ENGINEER

BRIDGE NO. — POST MILES 22.6/24.0

RETAINING WALL NO. 1 R-8
LOG OF TEST BORINGS

GS GEOTECHNICAL LOG OF TEST BORINGS SHEET (ENGLISH) (REV. 7/16/10)

ORIGINAL SCALE IN INCHES FOR REDUCED PLANS 0 1 2 3

CU: 04248
EA: 3A9211

DISREGARD PRINTS BEARING EARLIER REVISION DATES — REVISION DATES 9/22/09 4/26/11 10/24/11 — SHEET — OF

FILE => 43a921qa008.dgn

USERNAME => s123631 DATE PLOTTED => 19-APR-2012 TIME PLOTTED => 18:07

REFERENCE: CALTRANS SOIL & ROCK LOGGING, CLASSIFICATION, AND PRESENTATION MANUAL (2010)

GROUP SYMBOLS AND NAMES

Graphic/Symbol	Group Names	Graphic/Symbol	Group Names
GW	Well-graded GRAVEL Well-graded GRAVEL with SAND	CL	Lean CLAY Lean CLAY with SAND Lean CLAY with GRAVEL SANDY lean CLAY SANDY lean CLAY with GRAVEL GRAVELLY lean CLAY GRAVELLY lean CLAY with SAND
GP	Poorly-graded GRAVEL Poorly-graded GRAVEL with SAND		
GW-GM	Well-graded GRAVEL with SILT Well-graded GRAVEL with SILT and SAND	CL-ML	SILTY CLAY SILTY CLAY with SAND SILTY CLAY with GRAVEL SANDY SILTY CLAY SANDY SILTY CLAY with GRAVEL GRAVELLY SILTY CLAY GRAVELLY SILTY CLAY with SAND
GW-GC	Well-graded GRAVEL with CLAY (or SILTY CLAY) Well-graded GRAVEL with CLAY and SAND (or SILTY CLAY and SAND)		
GP-GM	Poorly-graded GRAVEL with SILT Poorly-graded GRAVEL with SILT and SAND	ML	SILT SILT with SAND SILT with GRAVEL SANDY SILT SANDY SILT with GRAVEL GRAVELLY SILT GRAVELLY SILT with SAND
GP-GC	Poorly-graded GRAVEL with CLAY (or SILTY CLAY) Poorly-graded GRAVEL with CLAY and SAND (or SILTY CLAY and SAND)		
GM	SILTY GRAVEL SILTY GRAVEL with SAND	OL	ORGANIC lean CLAY ORGANIC lean CLAY with SAND ORGANIC lean CLAY with GRAVEL SANDY ORGANIC lean CLAY SANDY ORGANIC lean CLAY with GRAVEL GRAVELLY ORGANIC lean CLAY GRAVELLY ORGANIC lean CLAY with SAND
GC	CLAYEY GRAVEL CLAYEY GRAVEL with SAND		
GC-GM	SILTY, CLAYEY GRAVEL SILTY, CLAYEY GRAVEL with SAND	OL	ORGANIC SILT ORGANIC SILT with SAND ORGANIC SILT with GRAVEL SANDY ORGANIC SILT SANDY ORGANIC SILT with GRAVEL GRAVELLY ORGANIC SILT GRAVELLY ORGANIC SILT with SAND
SW	Well-graded SAND Well-graded SAND with GRAVEL		
SP	Poorly-graded SAND Poorly-graded SAND with GRAVEL	CH	Fat CLAY Fat CLAY with SAND Fat CLAY with GRAVEL SANDY fat CLAY SANDY fat CLAY with GRAVEL GRAVELLY fat CLAY GRAVELLY fat CLAY with SAND
SW-SM	Well-graded SAND with SILT Well-graded SAND with SILT and GRAVEL		
SW-SC	Well-graded SAND with CLAY (or SILTY CLAY) Well-graded SAND with CLAY and GRAVEL (or SILTY CLAY and GRAVEL)	MH	Elastic SILT Elastic SILT with SAND Elastic SILT with GRAVEL SANDY elastic SILT SANDY elastic SILT with GRAVEL GRAVELLY elastic SILT GRAVELLY elastic SILT with SAND
SP-SM	Poorly-graded SAND with SILT Poorly-graded SAND with SILT and GRAVEL		
SP-SC	Poorly-graded SAND with CLAY (or SILTY CLAY) Poorly-graded SAND with CLAY and GRAVEL (or SILTY CLAY and GRAVEL)	OH	ORGANIC fat CLAY ORGANIC fat CLAY with SAND ORGANIC fat CLAY with GRAVEL SANDY ORGANIC fat CLAY SANDY ORGANIC fat CLAY with GRAVEL GRAVELLY ORGANIC fat CLAY GRAVELLY ORGANIC fat CLAY with SAND
SM	SILTY SAND SILTY SAND with GRAVEL		
SC	CLAYEY SAND CLAYEY SAND with GRAVEL	OH	ORGANIC elastic SILT ORGANIC elastic SILT with SAND ORGANIC elastic SILT with GRAVEL SANDY ORGANIC elastic SILT SANDY ORGANIC elastic SILT with GRAVEL GRAVELLY ORGANIC elastic SILT GRAVELLY ORGANIC elastic SILT with SAND
SC-SM	SILTY, CLAYEY SAND SILTY, CLAYEY SAND with GRAVEL		
PT	PEAT	OL/OH	ORGANIC SOIL ORGANIC SOIL with SAND ORGANIC SOIL with GRAVEL SANDY ORGANIC SOIL SANDY ORGANIC SOIL with GRAVEL GRAVELLY ORGANIC SOIL GRAVELLY ORGANIC SOIL with SAND
	COBBLES COBBLES and BOULDERS BOULDERS		

FIELD AND LABORATORY TESTING

- (C) Consolidation (ASTM D 2435)
- (CL) Collapse Potential (ASTM D 5333)
- (CP) Compaction Curve (CTM 216)
- (CR) Corrosivity Testing (CTM 643, CTM 422, CTM 417)
- (CU) Consolidated Undrained Triaxial (ASTM D 4767)
- (DS) Direct Shear (ASTM D 3080)
- (EI) Expansion Index (ASTM D 4829)
- (M) Moisture Content (ASTM D 2216)
- (OC) Organic Content-% (ASTM D 2974)
- (P) Permeability (CTM 220)
- (PA) Particle Size Analysis (ASTM D 422)
- (PI) Plasticity Index (AASHTO T 90) Liquid Limit (AASHTO T 89)
- (PL) Point Load Index (ASTM D 5731)
- (PM) Pressure Meter
- (R) R-Value (CTM 301)
- (SE) Sand Equivalent (CTM 217)
- (SG) Specific Gravity (AASHTO T 100)
- (SL) Shrinkage Limit (ASTM D 427)
- (SW) Swell Potential (ASTM D 4546)
- (UC) Unconfined Compression-Soil (ASTM D 2166) Unconfined Compression-Rock (ASTM D 2938)
- (UU) Unconsolidated Undrained Triaxial (ASTM D 2850)
- (UW) Unit Weight (ASTM D 4767)

DIST	COUNTY	ROUTE	POST MILES TOTAL PROJECT	SHEET No	TOTAL SHEETS
04	Ala	880	22.6/24.0	448	760

GEOTECHNICAL PROFESSIONAL — DATE 10/26/11

4-16-12
PLANS APPROVAL DATE

REGISTERED PROFESSIONAL ENGINEER — GARY PARIKH — No. G.E. 666 — Exp. 12/31/13 — GEOTECHNICAL — STATE OF CALIFORNIA

THE HNTB OR ITS OFFICERS OR AGENTS SHALL NOT BE RESPONSIBLE FOR THE ACCURACY OR COMPLETENESS OF SCANNED COPIES OF THIS PLAN SHEET.

ACTC
1333 BROADWAY, SUITES 220 & 300
OAKLAND, CA 94612

PARIKH CONSULTANTS, INC.
2360 QUME DRIVE, SUITE A
SAN JOSE, CA 95131

APPARENT DENSITY OF COHESIONLESS SOILS

Description	SPT N_{60} (Blows / 12 in.)
Very Loose	0 - 5
Loose	5 - 10
Medium Dense	10 - 30
Dense	30 - 50
Very Dense	Greater than 50

MOISTURE

Description	Criteria
Dry	No discernable moisture
Moist	Moisture present, but no free water
Wet	Visible free water

PERCENT OR PROPORTION OF SOILS

Description	Criteria
Trace	Particles are present but estimated to be less than 5%
Few	5% - 10%
Little	15% - 25%
Some	30% - 45%
Mostly	50% - 100%

PARTICLE SIZE

Description		Size (in.)
Boulder		Greater than 12
Cobble		3 - 12
Gravel	Coarse	3/4 - 3
	Fine	1/5 - 3/4
Sand	Coarse	1/16 - 1/5
	Medium	1/64 - 1/16
	Fine	1/300 - 1/64
Silt and Clay		Less than 1/300

SOIL LEGEND 2 OF 2

DESIGN OVERSIGHT
SIGN OFF DATE

DRAWN BY L. Tran
CHECKED BY D. Wang

L. Bhangoo, G. Tripathi
FIELD INVESTIGATION BY:
DATE: June 2008

PREPARED FOR THE STATE OF CALIFORNIA DEPARTMENT OF TRANSPORTATION

David Wang
PROJECT ENGINEER

BRIDGE NO.
POST MILES 22.6/24.0

RETAINING WALL NO. 1 R-9
LOG OF TEST BORINGS

GS GEOTECHNICAL LOG OF TEST BORINGS SHEET (ENGLISH) (REV. 7/16/10)

ORIGINAL SCALE IN INCHES FOR REDUCED PLANS 0 1 2 3

CU: 04248
EA: 3A9211

DISREGARD PRINTS BEARING EARLIER REVISION DATES

REVISION DATES — SHEET — OF

FILE => 43a921qa009.dgn

USERNAME => s123631 DATE PLOTTED => 19-APR-2012 TIME PLOTTED => 18:07

DIST	COUNTY	ROUTE	POST MILES TOTAL PROJECT	SHEET No	TOTAL SHEETS
04	Ala	880	22.6/24.0	449	760

GEOTECHNICAL PROFESSIONAL — DATE 10/26/11

4-16-12
PLANS APPROVAL DATE

REGISTERED PROFESSIONAL ENGINEER — GARY PARIKH — No. G.E. 666 — Exp. 12/31/13 — GEOTECHNICAL — STATE OF CALIFORNIA

THE HNTB OR ITS OFFICERS OR AGENTS SHALL NOT BE RESPONSIBLE FOR THE ACCURACY OR COMPLETENESS OF SCANNED COPIES OF THIS PLAN SHEET.

ACTC
1333 BROADWAY, SUITES 220 & 300
OAKLAND, CA 94612

PARIKH CONSULTANTS, INC.
2360 QUME DRIVE, SUITE A
SAN JOSE, CA 95131

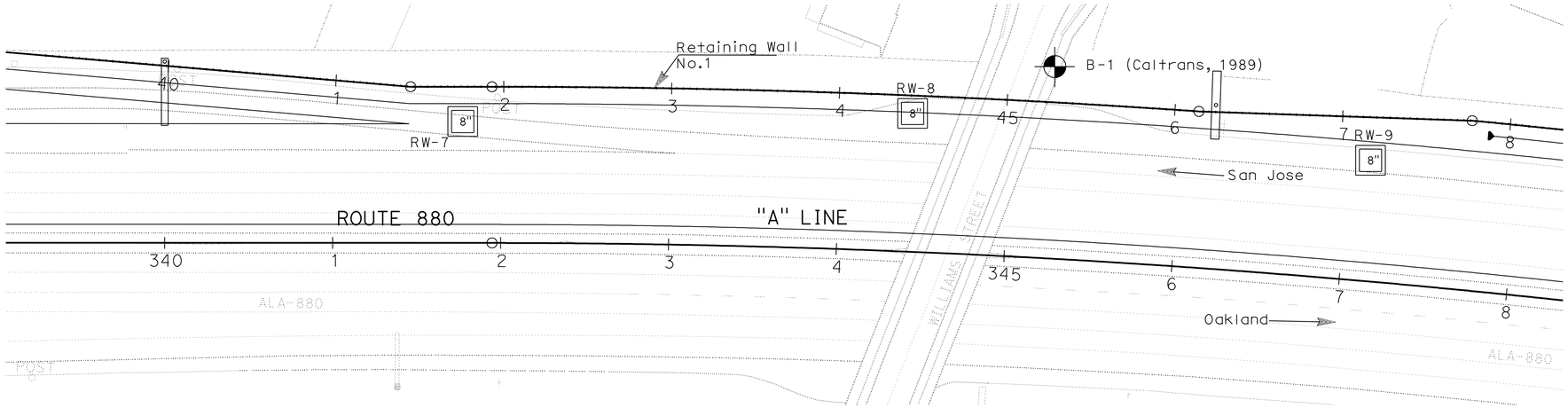

PLAN
1" = 40'

Note:
Standard Penetration Test Sampler: I.D. = 1.4"; O.D. = 2"
Modified California Sampler: I.D. = 2.5"; O.D. = 3"
Hammer Assembly: A 140 lb hammer with a 30" drop (Automatic Hammer)

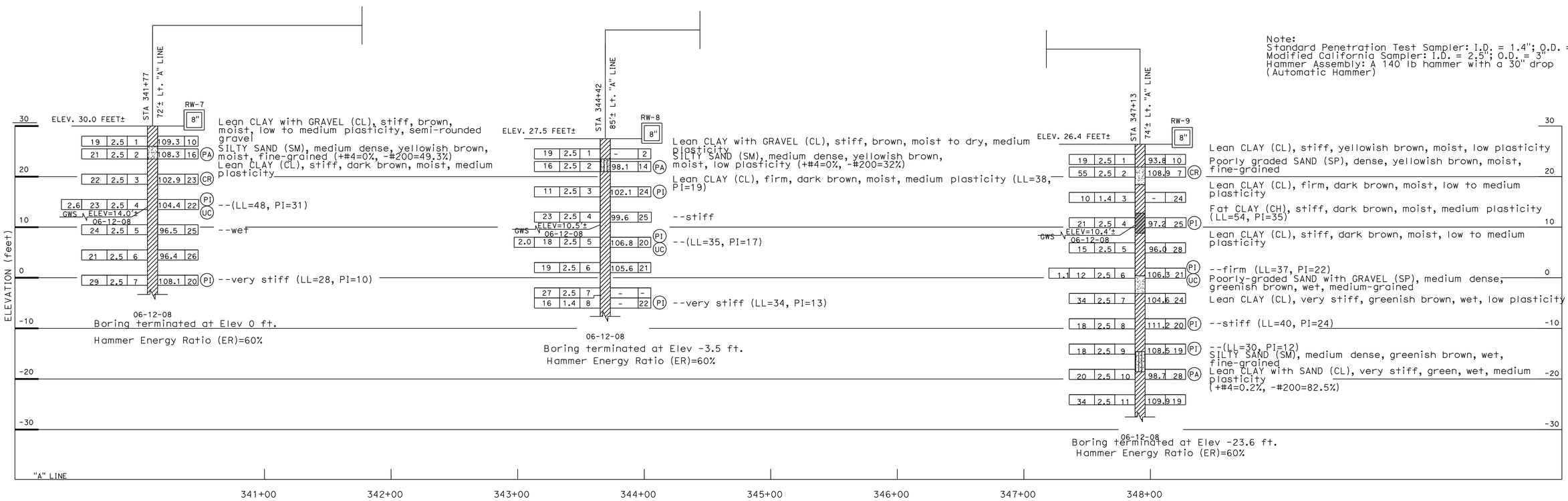

ALL DIMENSIONS ARE IN FEET UNLESS OTHERWISE SHOWN

PROFILE
Vert. : 1" = 10'
Hor. : 1" = 40'

R-10

DESIGN OVERSIGHT	DRAWN BY	L. Tran	L. Bhangoo, G. Tripathi	PREPARED FOR THE STATE OF CALIFORNIA DEPARTMENT OF TRANSPORTATION	David Wang PROJECT ENGINEER
SIGN OFF DATE	CHECKED BY	D. Wang	FIELD INVESTIGATION BY: DATE: June 2008		BRIDGE NO. / POST MILES 22.6/24.0

RETAINING WALL NO. 1
LOG OF TEST BORINGS 1 OF 3

GS GEOTECHNICAL LOG OF TEST BORINGS SHEET (ENGLISH) (REV. 7/16/10)

ORIGINAL SCALE IN INCHES FOR REDUCED PLANS 0 1 2 3

CU: 04248
EA: 3A9211

DISREGARD PRINTS BEARING EARLIER REVISION DATES

REVISION DATES — SHEET — OF

FILE => 43a921qa010.dgn

USERNAME => s123631 DATE PLOTTED => 19-APR-2012 TIME PLOTTED => 18:07

DIST	COUNTY	ROUTE	POST MILES TOTAL PROJECT	SHEET No	TOTAL SHEETS
04	Ala	880	22.6/24.0	450	760

GEOTECHNICAL PROFESSIONAL — DATE 10/26/11

4-16-12
PLANS APPROVAL DATE

REGISTERED PROFESSIONAL ENGINEER — GARY PARIKH — No. G.E. 666 — Exp. 12/31/13 — GEOTECHNICAL — STATE OF CALIFORNIA

THE HNTB OR ITS OFFICERS OR AGENTS SHALL NOT BE RESPONSIBLE FOR THE ACCURACY OR COMPLETENESS OF SCANNED COPIES OF THIS PLAN SHEET.

ACTC
1333 BROADWAY, SUITES 220 & 300
OAKLAND, CA 94612

PARIKH CONSULTANTS, INC.
2360 QUME DRIVE, SUITE A
SAN JOSE, CA 95131

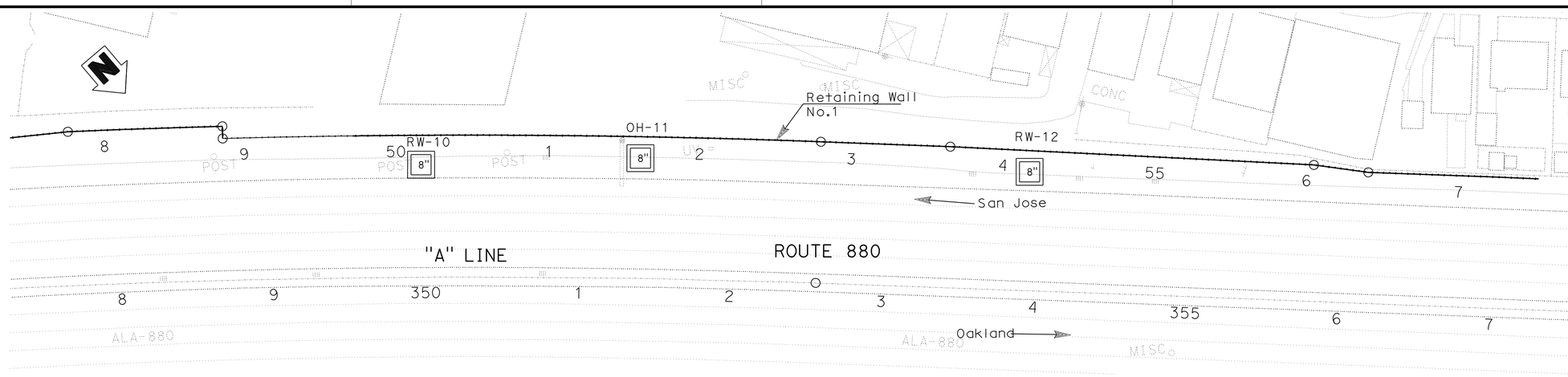

PLAN
1"=40'

Note:
Standard Penetration Test Sampler: I.D. = 1.4"; O.D. = 2"
Modified California Sampler: I.D. = 2.5"; O.D. = 3"
Hammer Assembly: A 140 lb hammer with a 30" drop (Automatic Hammer)

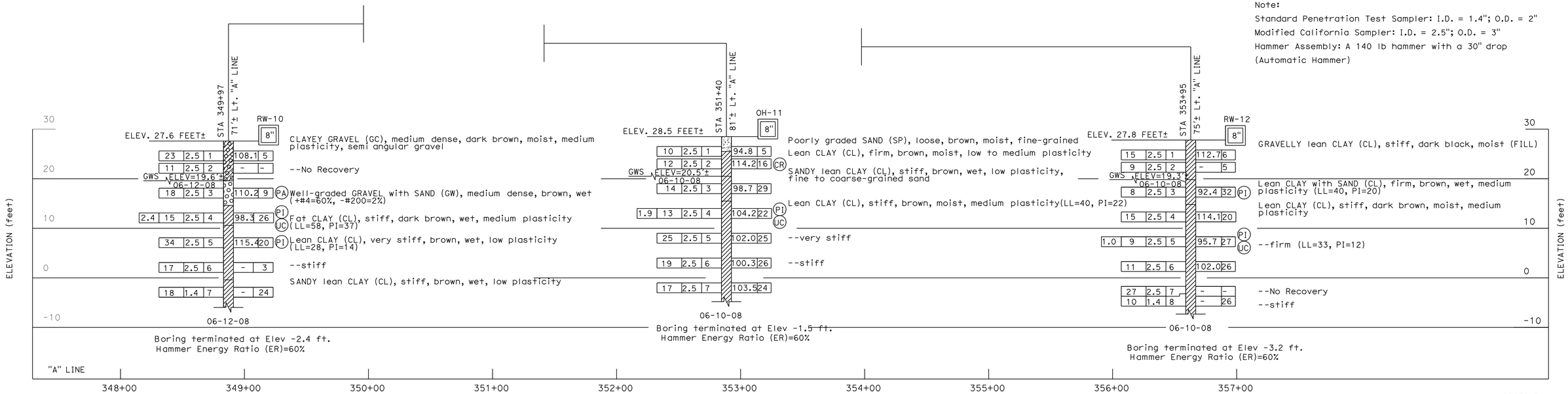

ALL DIMENSIONS ARE IN FEET UNLESS OTHERWISE SHOWN

PROFILE
Vert. : 1" = 10'
Hor. : 1" = 40'

R-11

DESIGN OVERSIGHT	DRAWN BY	L. Tran	L. Bhangoo, G. Tripathi — FIELD INVESTIGATION BY:
SIGN OFF DATE	CHECKED BY	D. Wang	DATE: June 2008

PREPARED FOR THE STATE OF CALIFORNIA DEPARTMENT OF TRANSPORTATION

David Wang — PROJECT ENGINEER

BRIDGE NO.
POST MILES 22.6/24.0

RETAINING WALL NO. 1
LOG OF TEST BORINGS 2 OF 3

GS GEOTECHNICAL LOG OF TEST BORINGS SHEET (ENGLISH) (REV. 7/16/10)

ORIGINAL SCALE IN INCHES FOR REDUCED PLANS 0 1 2 3

CU: 04248
EA: 3A9211

DISREGARD PRINTS BEARING EARLIER REVISION DATES

REVISION DATES — SHEET — OF

FILE => 43a921qa011.dgn

USERNAME => s123631 DATE PLOTTED => 19-APR-2012 TIME PLOTTED => 18:08

DIST.	COUNTY	ROUTE	POST MILES TOTAL PROJECT	SHEET NO.	TOTAL SHEETS
04	Ala	880	20.3/23.8	284	354

H. R. Taber
CERTIFIED ENGINEERING GEOLOGIST

8-26-91
PLANS APPROVAL DATE

REGISTERED GEOLOGIST — H. R. TABER — No. 12 — Exp. 6-30-90 — CERTIFIED ENGINEERING GEOLOGIST — STATE OF CALIFORNIA

TABER CONSULTANTS JOB No. 1P1/388/72-12
536 Galveston Street
West Sacramento, CA 95691 Field Study By: E. A. SHEDD

To Accompany Plans Dated 4-16-12

OFFICE OF STRUCTURE FOUNDATIONS – ENGINEERING SERVICE CENTER

As-Built Log of Test Borings sheet is considered an informational document only. As such, the State of California registration seal with signature, license number and registration certificate expiration date confirm that this is a true and accurate copy of the original document. This drawing is available and presented only for the convenience of any bidder, contractor or other interested party.

DIST.	COUNTY	ROUTE	POST MILE-TOTAL PROJECT	Sheet No.	Total Sheets
04	Ala	880	22.6/24.0	451	760

Gary Parikh 4/20/11
GEOTECHNICAL PROFESSIONAL DATE

REGISTERED PROFESSIONAL ENGINEER — GARY PARIKH — No. G.E. 666 — Exp. 12/31/11 — GEOTECHNICAL — STATE OF CALIFORNIA

RETAINING WALL NO. 1

LOG OF TEST BORINGS 3 OF 3

NOTE: A COPY OF THIS LOG OF TEST BORINGS IS AVAILABLE AT OFFICE OF STRUCTURE MAINTENANCE AND INVESTIGATIONS, SACRAMENTO, CALIFORNIA

CU: 04248
EA: 3A9211

BRIDGE No. –
Sheet of

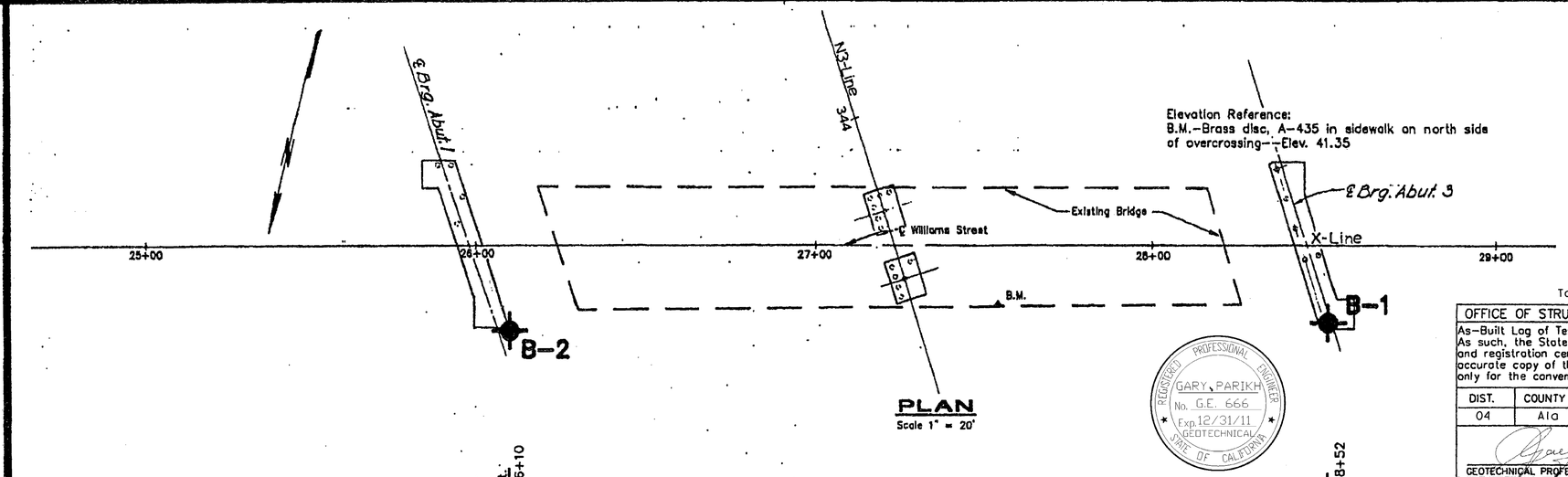

PLAN
Scale 1" = 20'

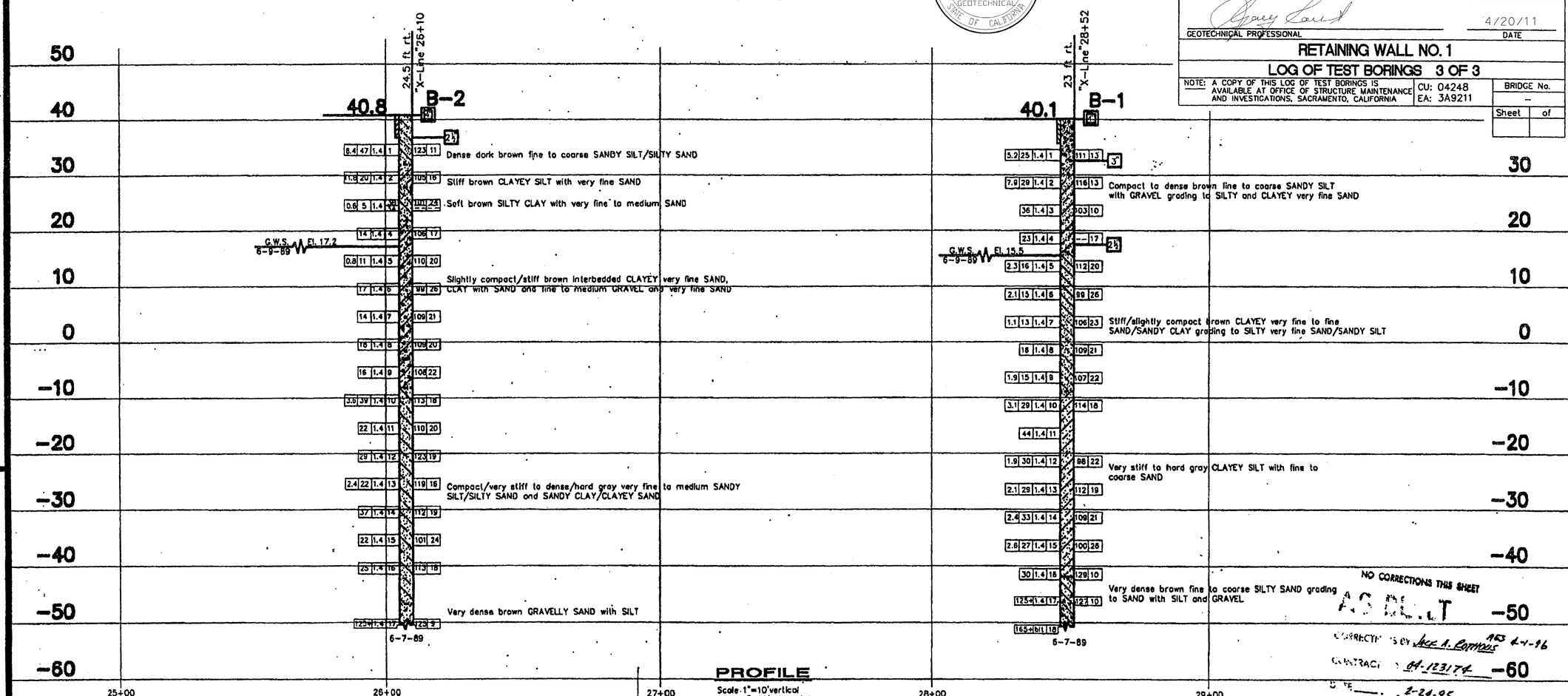

PROFILE
Scale 1"=10' vertical
1"=20' horizontal

NO CORRECTIONS THIS SHEET
AS BUILT
CORRECTIONS BY Jack A. Ramous 4-4-96
CONTRACT 04-123174
DATE 2-24-95

Scale: As shown

LEGEND OF BORING OPERATIONS

LEGEND OF EARTH MATERIALS: GRAVEL, SAND, SILT, CLAY, SANDY CLAY or CLAYEY SAND, SANDY SILT or SILTY SAND, SILTY CLAY, CLAYEY SILT, PEAT and/or ORGANIC MATTER, FILL MATERIAL, POROUS ROCK, SEDIMENTARY ROCK, METAMORPHIC ROCK

CONSISTENCY CLASSIFICATION FOR SOILS
According to the Standard Penetration Test

Penetration Index (Blows / Ft)	Granular	Cohesive
0-4	Very loose	Very soft
5-10	Loose	Soft
11-18	Slightly compact	Very stiff
19-34	Compact	Very hard
35-50	Dense	Very dense
51-70	Very dense	

NOTE: Classification of earth material as shown on this sheet is based upon field inspection and is not to be construed to imply mechanical analysis.

ENGINEERING GEOLOGY BRANCH - TRANSPORTATION LABORATORY
DRAWN BY M.D.R. 7-89
CHECKED BY E.A.S. 7-89
PROJECT ENGINEER

PREPARED FOR: State of CALIFORNIA DEPARTMENT OF TRANSPORTATION

DIVISION OF STRUCTURES 2
STRUCTURE DESIGN

BRIDGE NO. 33-169
POST MILE 23.1

WILLIAMS STREET OVERCROSSING
LOG OF TEST BORINGS

ORIGINAL SCALE IN INCHES FOR REDUCED PLANS 0 1 2 3

CU 04173
EA 125171

DISREGARD PRINTS BEARING EARLIER REVISION DATES

REVISION DATES (PRELIMINARY STAGE ONLY) SHEET 15 OF 76

TL 8052 REV. 4/89

FILENAME => 43a921qa12.tif

Dist	COUNTY	ROUTE	POST MILES TOTAL PROJECT	SHEET No.	TOTAL SHEETS
04	Ala	880	22.6/24.0	452	760

B. Razeghi 11-16-11
REGISTERED CIVIL ENGINEER DATE

4-16-12
PLANS APPROVAL DATE

REGISTERED PROFESSIONAL ENGINEER B. RAZEGHI No. C52725 Exp. 12-31-12 CIVIL STATE OF CALIFORNIA

THE STATE OF CALIFORNIA OR ITS OFFICERS OR AGENTS SHALL NOT BE RESPONSIBLE FOR THE ACCURACY OR COMPLETENESS OF SCANNED COPIES OF THIS PLAN SHEET.

WMH CORPORATION
555 12th St
Suite 1900
Oakland, CA 94607

ACTC
1333 Broadway
Suites 220 & 300
Oakland, CA 94612

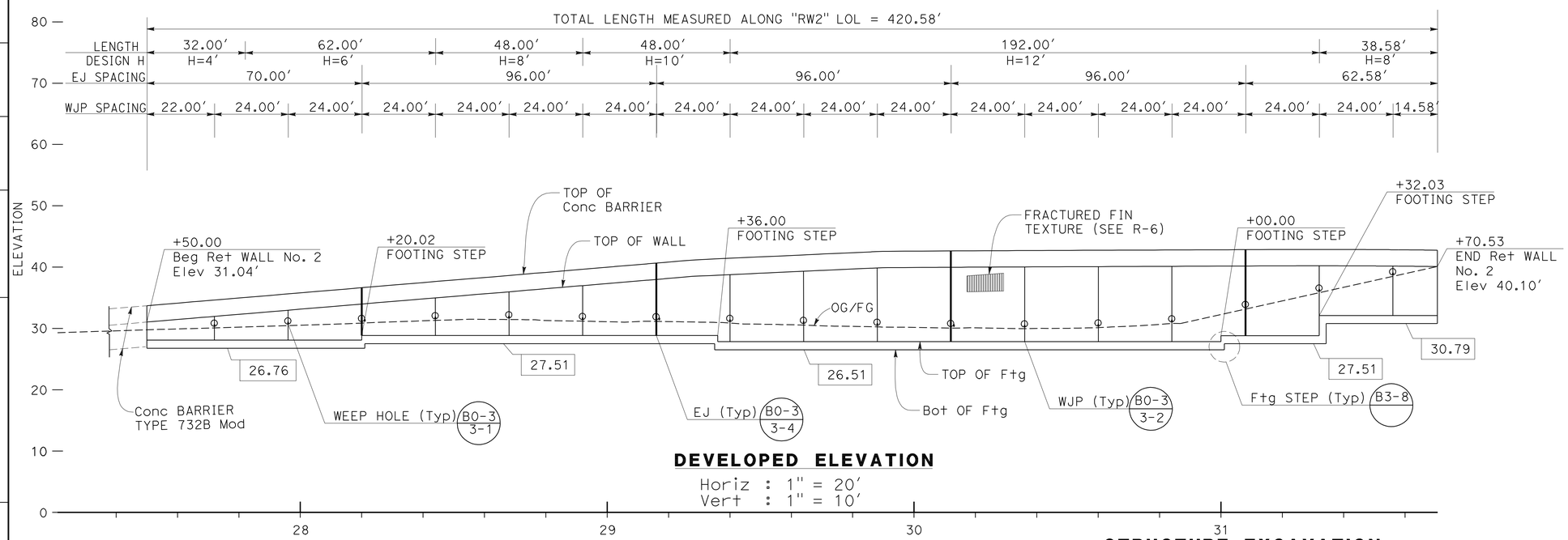

DEVELOPED ELEVATION

Horiz : 1" = 20'
Vert : 1" = 10'

LEGEND:

STRUCTURE EXCAVATION & BACKFILL WITH LCB

XX.XX Elev AT BOTTOM OF FOOTING

ABBREVIATIONS:

EJ EXPANSION JOINT
WJP WEAKENED PLANE

TOP OF WALL Elev

Sta	Elev
27+50.00	31.04
28+00.00	33.14
28+50.00	35.23
28+61.04	35.68
29+00.00	37.32
29+50.00	39.01
30+00.00	39.94
30+50.00	40.07
31+00.00	40.17
31+50.00	40.19
31+70.53	40.10

STRUCTURE EXCAVATION AND BACKFILL WITH LCB

STATION FROM	STATION TO	H	X
27+50.00	31+70.53	4', 6', & 8'	0'
		10'	2'
		12'	3'

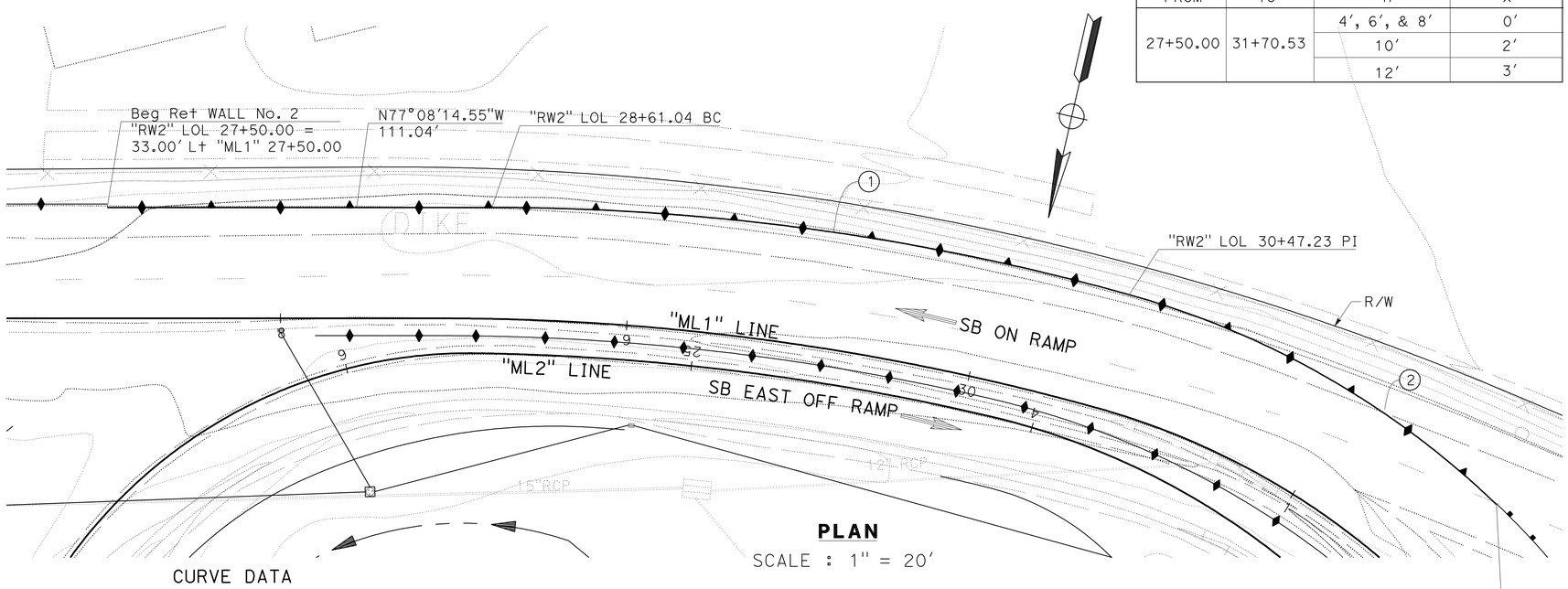

PLAN

SCALE : 1" = 20'

CURVE DATA

No.	R	Δ	T	L
1	684.59'	15°34'57.81"	93.67'	186.19'
2	249.64'	55°21'20.81"	130.94'	241.18'

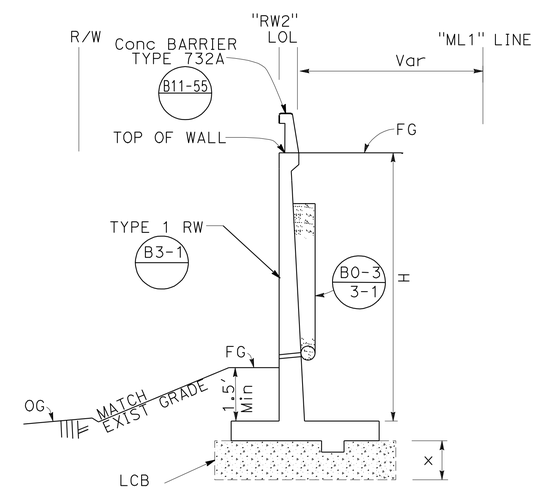

"RW2" LOL 27+50 TO 31+70.58

TYPICAL SECTION

NO SCALE

RETAINING WALL No. 2

RETAINING WALL PLAN

SCALE: AS SHOWN

R-13

APPROVED FOR RETAINING WALL WORK ONLY

EIA	BE	BE	REVISED BY	BERNARD ENRILE	CALCULATED-DESIGNED BY	CONSULTANT FUNCTIONAL SUPERVISOR	STATE OF CALIFORNIA - DEPARTMENT OF TRANSPORTATION
11/16/11	6/01/11	5/12/10	DATE REVISED	BEN RAZEGHI	CHECKED BY	TIMOTHY J. LEE	Caltrans

X:\880_Marina-Davis\000_CAD\Sheets\0000_Final PSE-Elec\ADDSubmittal\Final_Submittal_20111227\880MDRefMerge_20111226\EA04-3g9211_CADD-SUBMITTAL_20111227\43g921qb001.dgn

LAST REVISION 11-16-11 | DATE PLOTTED => 19-APR-2012 | TIME PLOTTED => 18:08

REFERENCE: CALTRANS SOIL & ROCK LOGGING, CLASSIFICATION, AND PRESENTATION MANUAL (2010)

DIST	COUNTY	ROUTE	POST MILES TOTAL PROJECT	SHEET No	TOTAL SHEETS
04	Ala	880	22.6/24.0	453	760

GEOTECHNICAL PROFESSIONAL — DATE 10/26/11

4-16-12
PLANS APPROVAL DATE

REGISTERED PROFESSIONAL ENGINEER — GARY PARIKH — No. G.E. 666 — Exp. 12/31/13 — GEOTECHNICAL — STATE OF CALIFORNIA

THE HNTB OR ITS OFFICERS OR AGENTS SHALL NOT BE RESPONSIBLE FOR THE ACCURACY OR COMPLETENESS OF SCANNED COPIES OF THIS PLAN SHEET.

ACTC
1333 BROADWAY, SUITES 220 & 300
OAKLAND, CA 94612

PARIKH CONSULTANTS, INC.
2360 QUME DRIVE, SUITE A
SAN JOSE, CA 95131

CEMENTATION

Description	Criteria
Weak	Crumbles or breaks with handling or little finger pressure.
Moderate	Crumbles or breaks with considerable finger pressure.
Strong	Will not crumble or break with finger pressure.

BOREHOLE IDENTIFICATION

Symbol	Hole Type	Description
Size	A	Auger Boring (hollow or solid stem bucket)
Size	R RW RC P	Rotary drilled boring (conventional) Rotary drilled with self-casing wire-line Rotary core with continuously-sampled, self-casing wire-line Rotary percussion boring (air)
Size	R	Rotary drilled diamond core
Size	HD HA	Hand driven (1-inch soil tube) Hand Auger
●	D	Dynamic Cone Penetration Boring
▲	CPT	Cone Penetration Test (ASTM D 5778)
⬚	O	Other (note on LOTB)

Note: Size in inches.

CONSISTENCY OF COHESIVE SOILS

Description	Shear Strength (tsf)	Pocket Penetrometer Measurement, PP, (tsf)	Torvane Measurement, TV, (tsf)	Vane Shear Measurement, VS, (tsf)
Very Soft	Less than 0.12	Less than 0.25	Less than 0.12	Less than 0.12
Soft	0.12 - 0.25	0.25 - 0.5	0.12 - 0.25	0.12 - 0.25
Medium Stiff	0.25 - 0.5	0.5 - 1	0.25 - 0.5	0.25 - 0.5
Stiff	0.5 - 1	1 - 2	0.5 - 1	0.5 - 1
Very Stiff	1 - 2	2 - 4	1 - 2	1 - 2
Hard	Greater than 2	Greater than 4	Greater than 2	Greater than 2

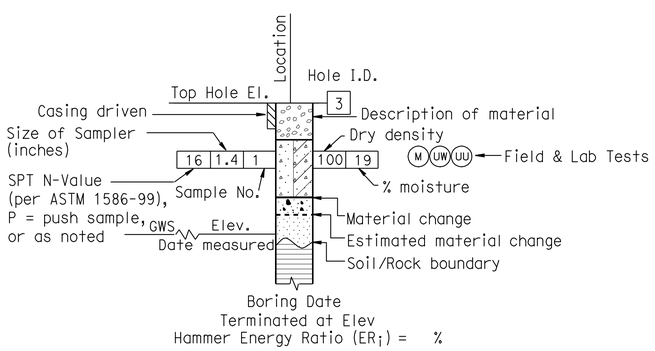

ROTARY BORING

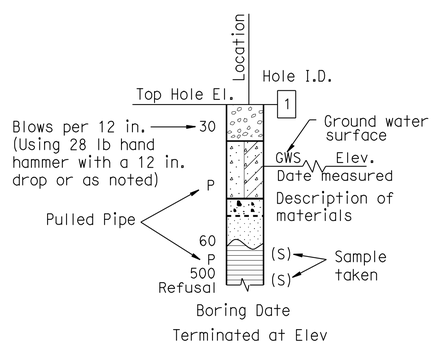

HAND BORING

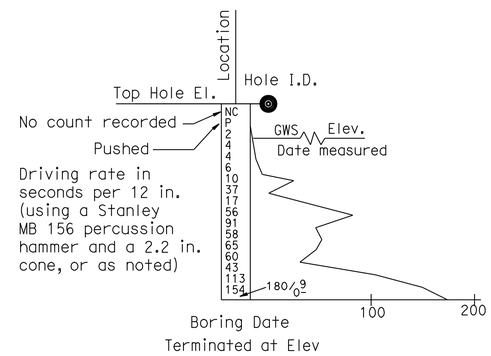

DYNAMIC CONE PENETRATION BORING

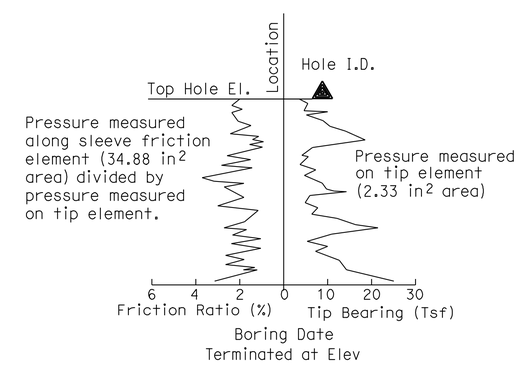

CONE PENETRATION TEST (CPT) BORING

SOIL LEGEND 1 OF 2

DESIGN OVERSIGHT	DRAWN BY	L. Tran	L. Bhangoo, G. Tripathi FIELD INVESTIGATION BY:
SIGN OFF DATE	CHECKED BY	D. Wang	DATE: June 2008

PREPARED FOR THE STATE OF CALIFORNIA DEPARTMENT OF TRANSPORTATION

David Wang
PROJECT ENGINEER

BRIDGE NO.
POST MILES 22.6/24.0

RETAINING WALL NO. 2 R-14
LOG OF TEST BORINGS

GS GEOTECHNICAL LOG OF TEST BORINGS SHEET (ENGLISH) (REV. 7/16/10)

ORIGINAL SCALE IN INCHES FOR REDUCED PLANS 0 1 2 3

CU: 04248
EA: 3A9211

DISREGARD PRINTS BEARING EARLIER REVISION DATES — REVISION DATES 9/22/09 4/20/11 10/24/11 — SHEET — OF

FILE => 43a921qb002.dgn

USERNAME => s123631 DATE PLOTTED => 19-APR-2012 TIME PLOTTED => 18:08

REFERENCE: CALTRANS SOIL & ROCK LOGGING, CLASSIFICATION, AND PRESENTATION MANUAL (2010)

GROUP SYMBOLS AND NAMES

Graphic/Symbol	Group Names	Graphic/Symbol	Group Names
GW	Well-graded GRAVEL Well-graded GRAVEL with SAND	CL	Lean CLAY Lean CLAY with SAND Lean CLAY with GRAVEL SANDY lean CLAY SANDY lean CLAY with GRAVEL GRAVELLY lean CLAY GRAVELLY lean CLAY with SAND
GP	Poorly-graded GRAVEL Poorly-graded GRAVEL with SAND		
GW-GM	Well-graded GRAVEL with SILT Well-graded GRAVEL with SILT and SAND	CL-ML	SILTY CLAY SILTY CLAY with SAND SILTY CLAY with GRAVEL SANDY SILTY CLAY SANDY SILTY CLAY with GRAVEL GRAVELLY SILTY CLAY GRAVELLY SILTY CLAY with SAND
GW-GC	Well-graded GRAVEL with CLAY (or SILTY CLAY) Well-graded GRAVEL with CLAY and SAND (or SILTY CLAY and SAND)		
GP-GM	Poorly-graded GRAVEL with SILT Poorly-graded GRAVEL with SILT and SAND	ML	SILT SILT with SAND SILT with GRAVEL SANDY SILT SANDY SILT with GRAVEL GRAVELLY SILT GRAVELLY SILT with SAND
GP-GC	Poorly-graded GRAVEL with CLAY (or SILTY CLAY) Poorly-graded GRAVEL with CLAY and SAND (or SILTY CLAY and SAND)		
GM	SILTY GRAVEL SILTY GRAVEL with SAND	OL	ORGANIC lean CLAY ORGANIC lean CLAY with SAND ORGANIC lean CLAY with GRAVEL SANDY ORGANIC lean CLAY SANDY ORGANIC lean CLAY with GRAVEL GRAVELLY ORGANIC lean CLAY GRAVELLY ORGANIC lean CLAY with SAND
GC	CLAYEY GRAVEL CLAYEY GRAVEL with SAND		
GC-GM	SILTY, CLAYEY GRAVEL SILTY, CLAYEY GRAVEL with SAND	OL	ORGANIC SILT ORGANIC SILT with SAND ORGANIC SILT with GRAVEL SANDY ORGANIC SILT SANDY ORGANIC SILT with GRAVEL GRAVELLY ORGANIC SILT GRAVELLY ORGANIC SILT with SAND
SW	Well-graded SAND Well-graded SAND with GRAVEL		
SP	Poorly-graded SAND Poorly-graded SAND with GRAVEL	CH	Fat CLAY Fat CLAY with SAND Fat CLAY with GRAVEL SANDY fat CLAY SANDY fat CLAY with GRAVEL GRAVELLY fat CLAY GRAVELLY fat CLAY with SAND
SW-SM	Well-graded SAND with SILT Well-graded SAND with SILT and GRAVEL		
SW-SC	Well-graded SAND with CLAY (or SILTY CLAY) Well-graded SAND with CLAY and GRAVEL (or SILTY CLAY and GRAVEL)	MH	Elastic SILT Elastic SILT with SAND Elastic SILT with GRAVEL SANDY elastic SILT SANDY elastic SILT with GRAVEL GRAVELLY elastic SILT GRAVELLY elastic SILT with SAND
SP-SM	Poorly-graded SAND with SILT Poorly-graded SAND with SILT and GRAVEL		
SP-SC	Poorly-graded SAND with CLAY (or SILTY CLAY) Poorly-graded SAND with CLAY and GRAVEL (or SILTY CLAY and GRAVEL)	OH	ORGANIC fat CLAY ORGANIC fat CLAY with SAND ORGANIC fat CLAY with GRAVEL SANDY ORGANIC fat CLAY SANDY ORGANIC fat CLAY with GRAVEL GRAVELLY ORGANIC fat CLAY GRAVELLY ORGANIC fat CLAY with SAND
SM	SILTY SAND SILTY SAND with GRAVEL		
SC	CLAYEY SAND CLAYEY SAND with GRAVEL	OH	ORGANIC elastic SILT ORGANIC elastic SILT with SAND ORGANIC elastic SILT with GRAVEL SANDY ORGANIC elastic SILT SANDY ORGANIC elastic SILT with GRAVEL GRAVELLY ORGANIC elastic SILT GRAVELLY ORGANIC elastic SILT with SAND
SC-SM	SILTY, CLAYEY SAND SILTY, CLAYEY SAND with GRAVEL		
PT	PEAT	OL/OH	ORGANIC SOIL ORGANIC SOIL with SAND ORGANIC SOIL with GRAVEL SANDY ORGANIC SOIL SANDY ORGANIC SOIL with GRAVEL GRAVELLY ORGANIC SOIL GRAVELLY ORGANIC SOIL with SAND
	COBBLES COBBLES and BOULDERS BOULDERS		

FIELD AND LABORATORY TESTING

- (C) Consolidation (ASTM D 2435)
- (CL) Collapse Potential (ASTM D 5333)
- (CP) Compaction Curve (CTM 216)
- (CR) Corrosivity Testing (CTM 643, CTM 422, CTM 417)
- (CU) Consolidated Undrained Triaxial (ASTM D 4767)
- (DS) Direct Shear (ASTM D 3080)
- (EI) Expansion Index (ASTM D 4829)
- (M) Moisture Content (ASTM D 2216)
- (OC) Organic Content-% (ASTM D 2974)
- (P) Permeability (CTM 220)
- (PA) Particle Size Analysis (ASTM D 422)
- (PI) Plasticity Index (AASHTO T 90) Liquid Limit (AASHTO T 89)
- (PL) Point Load Index (ASTM D 5731)
- (PM) Pressure Meter
- (R) R-Value (CTM 301)
- (SE) Sand Equivalent (CTM 217)
- (SG) Specific Gravity (AASHTO T 100)
- (SL) Shrinkage Limit (ASTM D 427)
- (SW) Swell Potential (ASTM D 4546)
- (UC) Unconfined Compression-Soil (ASTM D 2166) Unconfined Compression-Rock (ASTM D 2938)
- (UU) Unconsolidated Undrained Triaxial (ASTM D 2850)
- (UW) Unit Weight (ASTM D 4767)

DIST	COUNTY	ROUTE	POST MILES TOTAL PROJECT	SHEET No	TOTAL SHEETS
04	Ala	880	22.6/24.0	454	760

GEOTECHNICAL PROFESSIONAL — DATE 10/26/11

4-16-12
PLANS APPROVAL DATE

REGISTERED PROFESSIONAL ENGINEER — GARY PARIKH — No. G.E. 666 — Exp. 12/31/13 — GEOTECHNICAL — STATE OF CALIFORNIA

THE HNTB OR ITS OFFICERS OR AGENTS SHALL NOT BE RESPONSIBLE FOR THE ACCURACY OR COMPLETENESS OF SCANNED COPIES OF THIS PLAN SHEET.

ACTC
1333 BROADWAY, SUITES 220 & 300
OAKLAND, CA 94612

PARIKH CONSULTANTS, INC.
2360 QUME DRIVE, SUITE A
SAN JOSE, CA 95131

APPARENT DENSITY OF COHESIONLESS SOILS

Description	SPT N_{60} (Blows / 12 in.)
Very Loose	0 - 5
Loose	5 - 10
Medium Dense	10 - 30
Dense	30 - 50
Very Dense	Greater than 50

MOISTURE

Description	Criteria
Dry	No discernable moisture
Moist	Moisture present, but no free water
Wet	Visible free water

PERCENT OR PROPORTION OF SOILS

Description	Criteria
Trace	Particles are present but estimated to be less than 5%
Few	5% - 10%
Little	15% - 25%
Some	30% - 45%
Mostly	50% - 100%

PARTICLE SIZE

Description		Size (in.)
Boulder		Greater than 12
Cobble		3 - 12
Gravel	Coarse	3/4 - 3
	Fine	1/5 - 3/4
Sand	Coarse	1/16 - 1/5
	Medium	1/64 - 1/16
	Fine	1/300 - 1/64
Silt and Clay		Less than 1/300

SOIL LEGEND 2 OF 2

DESIGN OVERSIGHT
SIGN OFF DATE

DRAWN BY L. Tran
CHECKED BY D. Wang

L. Bhangoo, G. Tripathi
FIELD INVESTIGATION BY:
DATE: June 2008

PREPARED FOR THE STATE OF CALIFORNIA DEPARTMENT OF TRANSPORTATION

David Wang
PROJECT ENGINEER

BRIDGE NO.
POST MILES 22.6/24.0

RETAINING WALL NO. 2 R-15
LOG OF TEST BORINGS

GS GEOTECHNICAL LOG OF TEST BORINGS SHEET (ENGLISH) (REV. 7/16/10)

ORIGINAL SCALE IN INCHES FOR REDUCED PLANS 0 1 2 3

CU: 04248
EA: 3A9211

DISREGARD PRINTS BEARING EARLIER REVISION DATES

REVISION DATES — SHEET — OF

FILE => 43a921qb003.dgn

USERNAME => s123631 DATE PLOTTED => 19-APR-2012 TIME PLOTTED => 18:08

DIST	COUNTY	ROUTE	POST MILES TOTAL PROJECT	SHEET No	TOTAL SHEETS
04	Ala	880	22.6/24.0	455	760

GEOTECHNICAL PROFESSIONAL — DATE 10/26/11

4-16-12
PLANS APPROVAL DATE

REGISTERED PROFESSIONAL ENGINEER — GARY PARIKH — No. G.E. 666 — Exp. 12/31/13 — GEOTECHNICAL — STATE OF CALIFORNIA

THE HNTB OR ITS OFFICERS OR AGENTS SHALL NOT BE RESPONSIBLE FOR THE ACCURACY OR COMPLETENESS OF SCANNED COPIES OF THIS PLAN SHEET.

ACTC
1333 BROADWAY, SUITES 220 & 300
OAKLAND, CA 94612

PARIKH CONSULTANTS, INC.
2360 QUME DRIVE, SUITE A
SAN JOSE, CA 95131

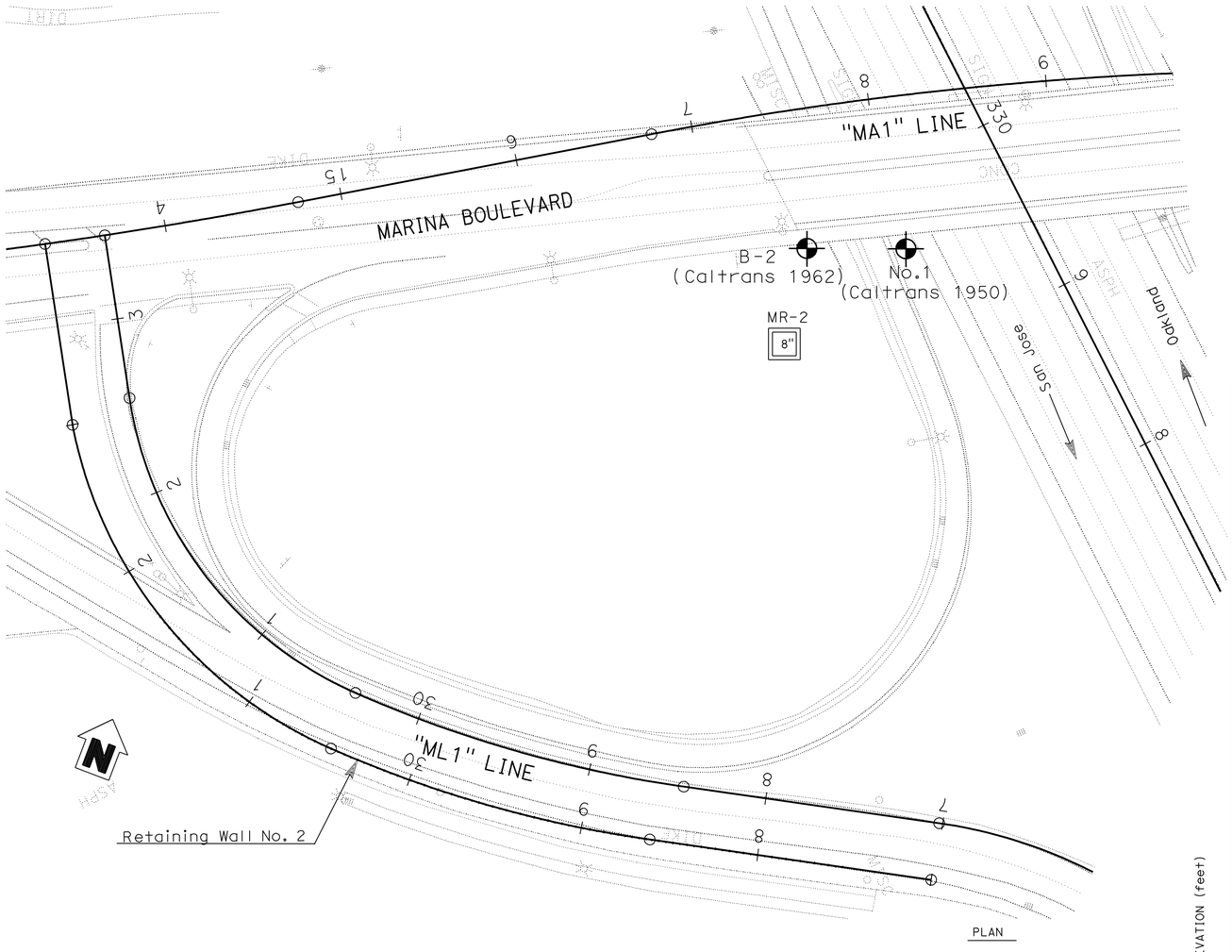

PLAN
1"=40'

Note:
Standard Penetration Test Sampler: I.D. = 1.4"; O.D. = 2"
Modified California Sampler: I.D. = 2.5"; O.D. = 3"
Hammer Assembly: A 140 lb hammer with a 30" drop
(Automatic Hammer)

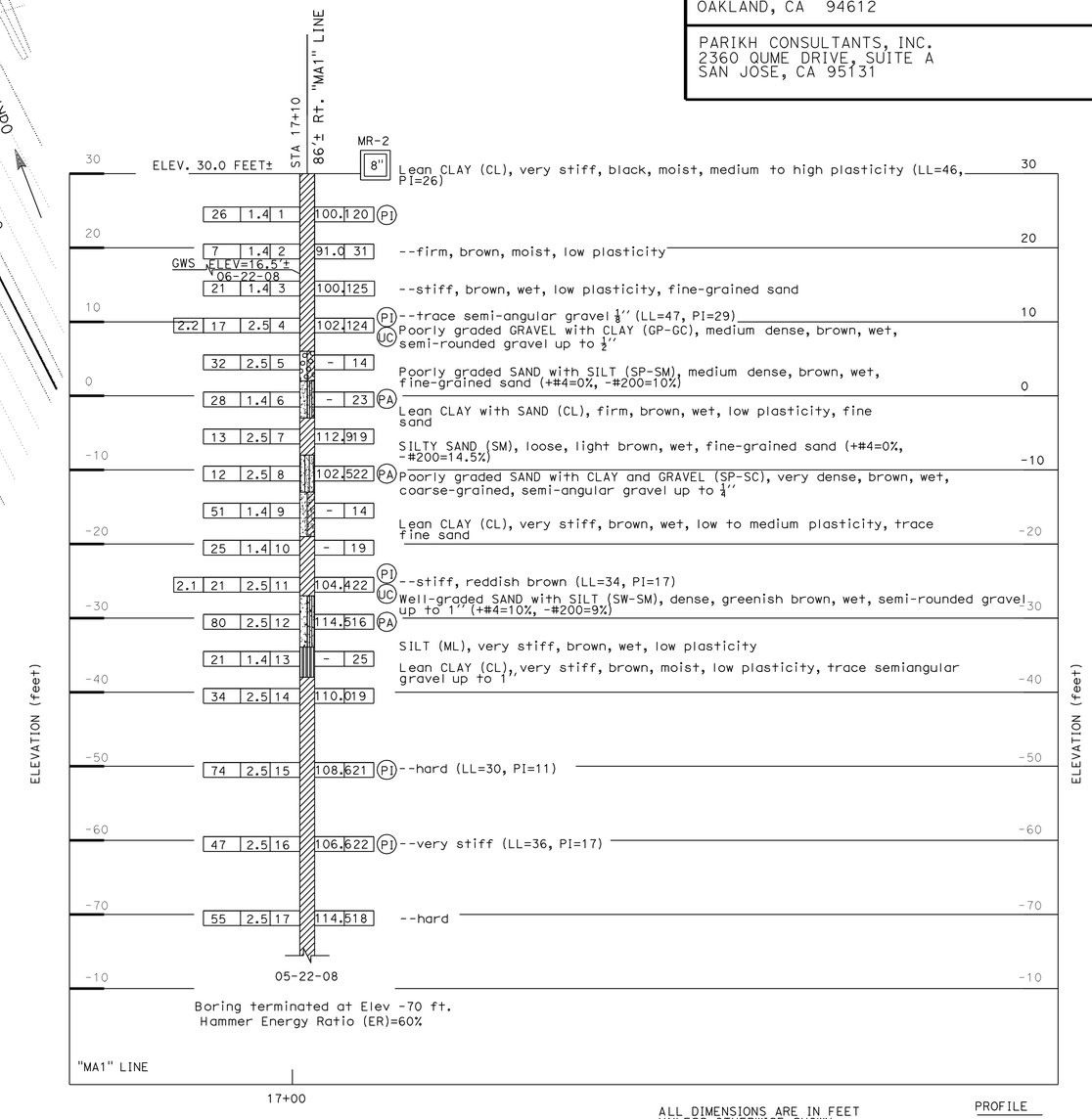

ALL DIMENSIONS ARE IN FEET UNLESS OTHERWISE SHOWN

PROFILE
Vert. : 1" = 10'
Hor. : 1" = 40'

DESIGN OVERSIGHT	DRAWN BY	L. Tran	L. Bhangoo, G. Tripathi — FIELD INVESTIGATION BY:
SIGN OFF DATE	CHECKED BY	D. Wang	DATE: June 2008

PREPARED FOR THE STATE OF CALIFORNIA DEPARTMENT OF TRANSPORTATION

David Wang — PROJECT ENGINEER

BRIDGE NO.
POST MILES 22.6/24.0

RETAINING WALL NO. 2 R-16
LOG OF TEST BORINGS 1 OF 3

GS GEOTECHNICAL LOG OF TEST BORINGS SHEET (ENGLISH) (REV. 7/16/10)

ORIGINAL SCALE IN INCHES FOR REDUCED PLANS 0 1 2 3

CU: 04248
EA: 3A9211

DISREGARD PRINTS BEARING EARLIER REVISION DATES

REVISION DATES — SHEET — OF

FILE => 43a921qb004.dgn

USERNAME => s123631 DATE PLOTTED => 19-APR-2012 TIME PLOTTED => 18:08

DIST. NO.	STATE	KNOL NO.	YEAR	NO.	SHEETS
2	CAL.			143	174

DIST.	COUNTY	ROUTE	BRIDGE NO.	SHEET NO.	TOTAL SHEETS
IV	Ala	880	33-187	2	9

Stuart M. Stuart
August 21, 1950

OFFICE OF STRUCTURE FOUNDATIONS – ENGINEERING SERVICE CENTER

As-Built Log of Test Borings sheet is considered an informational document only. As such, the State of California registration seal with signature, license number and registration certificate expiration date confirm that this is a true and accurate copy of the original document. This drawing is available and presented only for the convenience of any bidder, contractor or other interested party.

DIST.	COUNTY	ROUTE	POST MILE–TOTAL PROJECT	Sheet No.	Total Sheets
04	Ala	880	22.6/24.0	456	760

GEOTECHNICAL PROFESSIONAL — DATE 04/20/11

REGISTERED PROFESSIONAL ENGINEER — GARY PARIKH — No. G.E. 666 — Exp. 12/31/11 — GEOTECHNICAL — STATE OF CALIFORNIA

RETAINING WALL NO. 2

LOG OF TEST BORINGS 2 OF 3

NOTE: A COPY OF THIS LOG OF TEST BORINGS IS AVAILABLE AT OFFICE OF STRUCTURE MAINTENANCE AND INVESTIGATIONS, SACRAMENTO, CALIFORNIA

CU: 04248
EA: 3A9211

BRIDGE No. –

Sheet	of

To Accompany Plans Dated 4-16-12

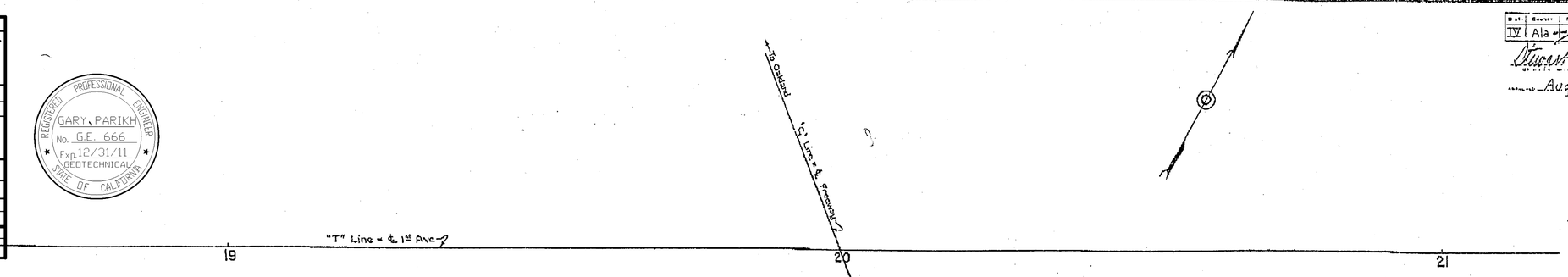

AS BUILT PLANS
Contract No. 51-424217
Date Completed
Document No. 4000556

BM No 28
1" iron pin in ground 0.5' north of fence line 201' lt "C" 330+00
Elev. 25.41

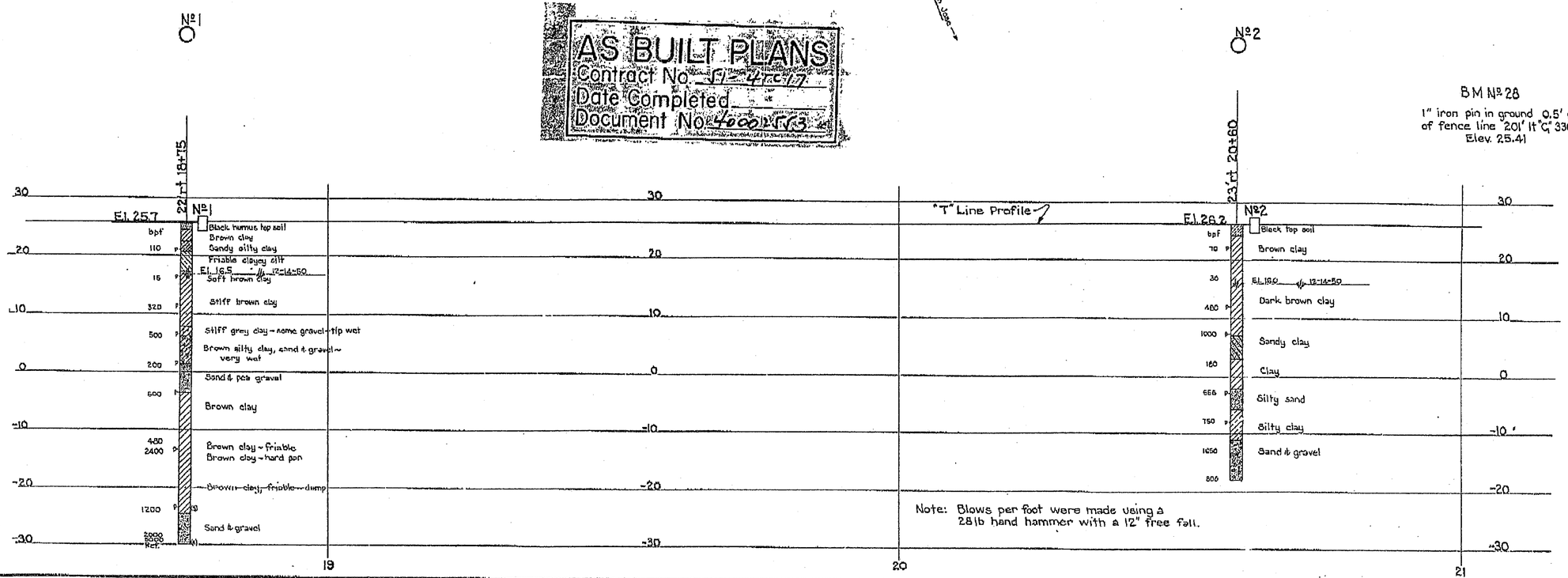

Note: Blows per foot were made using a 28 lb hand hammer with a 12" free fall.

CLASSIFICATION OF MATERIAL BASED ON STANDARD GRADE SIZE LIMITS

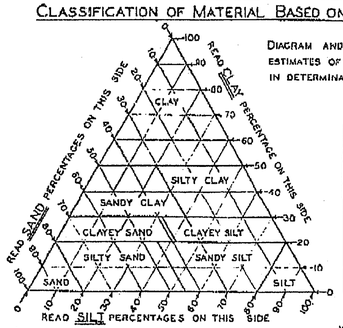

DIAGRAM AND TABLE SHOWING THE BASIS FOR ESTIMATES OF GRADE SIZE DISTRIBUTION USED IN DETERMINATION OF CLASS NAMES.

GROUPING USED IN TRIANGULAR CLASSIFICATION			
CLASS NAME	PERCENTAGE OF SIZES PRESENT		
	SAND	SILT	CLAY
SAND	80–100	0–20	0–20
SILTY SAND	45–80	0–55	0–20
SANDY SILT	0–45	35–80	0–20
SILT	0–20	80–100	0–20
CLAYEY SAND	38–80	0–42	20–30
CLAYEY SILT	0–38	32–80	20–30
SANDY CLAY	30–70	0–40	30–50
SILTY CLAY	0–30	20–70	30–50
CLAY	0–50	0–30	50–100

IF GRAVEL IS PRESENT IN APPRECIABLE AMOUNTS THE TERM "GRAVELLY" MAY BE ADDED TO THE CLASS NAME, VIS. "GRAVELLY SAND." THE TERMS "COARSE," "MEDIUM" AND "FINE" WHEN USED TO DESCRIBE GRAVEL, SAND AND SILT REFER TO STANDARD GRADE SIZE LIMITS.

LEGEND OF BORING OPERATIONS

- PLAN OF ANY BORING
- 1" SAMPLER BORING
- ROTARY WASH BORING
- 1" CLOSED SAMPLER DRIVEN
- CORE BORING
- 2½" PENETROMETER DRIVEN
- 2" SAMPLER BORING
- 2"TO5" AUGER BORING
- 6"TO20" AUGER BORING
- CASING DRIVEN
- JET BORING
- (S) SAMPLE TAKEN

THE APPROPRIATE BORING SYMBOLS DESIGNATING THE METHOD OF OPERATION ARE SHOWN AT THE UPPER RIGHT-HAND CORNER OF THE RESPECTIVE BORING. WHERE TOOL CHANGES WERE MADE DURING THE BORING OPERATION SYMBOLS ARE SHOWN AT THE POINT OF CHANGE.

LEGEND OF EARTH MATERIALS

- GRAVEL – G
- SAND – S
- SILT – SI
- CLAY – C
- SILTY SAND – SI S
- CLAYEY SAND – C S
- SANDY SILT – S SI
- CLAYEY SILT – C SI
- SANDY CLAY – SC
- SILTY CLAY – SI C
- PEAT and/or ORGANIC CLAY – O
- SANDSTONE – SS
- SHALE – SH
- BROKEN ROCK (FRAGMENTS) – BR
- ROCK – R

ABBREVIATIONS

EL. 69.4	ELEVATION OF GROUND AT TEST HOLE
bpf	BLOWS PER FOOT – (SEE NOTE ABOVE)
P	PULLED PIPE
M	MOISTURE AS % DRY WEIGHT
EL. 6.3 9-12-49	ELEVATION OF GROUND WATER AND DATE

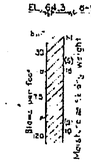

NOTES

THE CONTRACTOR'S ATTENTION IS DIRECTED TO SECTION 2, ARTICLE (c) OF THE STANDARD SPECIFICATIONS AND TO THE SPECIAL PROVISIONS ACCOMPANYING THIS SET OF PLANS.

CLASSIFICATION OF EARTH MATERIAL AS SHOWN ON THIS SHEET IS BASED UPON FIELD INSPECTION AND IS NOT TO BE CONSTRUED TO IMPLY MECHANICAL ANALYSIS.

See Pile Driving Log

MICROFILMED

BRIDGE DEPARTMENT

FIRST AVE. OVERCROSSING
LOG OF TEST BORINGS

SCALE 1" = 10'
FILE NO
BRIDGE No. 33-187
DRAWING NO. C-23326-2

43a921qb005.tif

~~OFFICE OF STRUCTURE FOUNDATIONS — ENGINEERING SERVICE CENTER~~

As-Built Log of Test Borings sheet is considered an informational document only. As such, the State of California registration seal with signature, license number and registration certificate expiration date confirm that this is a true and accurate copy of the original document. This drawing is available and presented only for the convenience of any bidder, contractor or other interested party.

DIST.	COUNTY	ROUTE	POST MILE–TOTAL PROJECT	Sheet No.	Total Sheets
04	Ala	880	22.6/24.0	457	760

GEOTECHNICAL PROFESSIONAL — DATE: 04/20/11

REGISTERED PROFESSIONAL ENGINEER — GARY PARIKH — No. G.E. 666 — Exp. 12/31/11 — GEOTECHNICAL — STATE OF CALIFORNIA

RETAINING WALL NO. 2

LOG OF TEST BORINGS 3 OF 3

NOTE: A COPY OF THIS LOG OF TEST BORINGS IS AVAILABLE AT OFFICE OF STRUCTURE MAINTENANCE AND INVESTIGATIONS, SACRAMENTO, CALIFORNIA

CU: 04248
EA: 3A9211

BRIDGE No. —

Sheet of

BM #323 CHC disc. in conc. bent 50' Lt. "C" 324 + 46 Elev. 27.246

To Accompany Plans Dated 4-16-12

IV-ALA-17

DIST.	COUNTY	ROUTE	SECTION	SHEET No.	TOTAL SHEETS
4	Ala	880	Stat	13	13

Date approved MAY 14, 1962

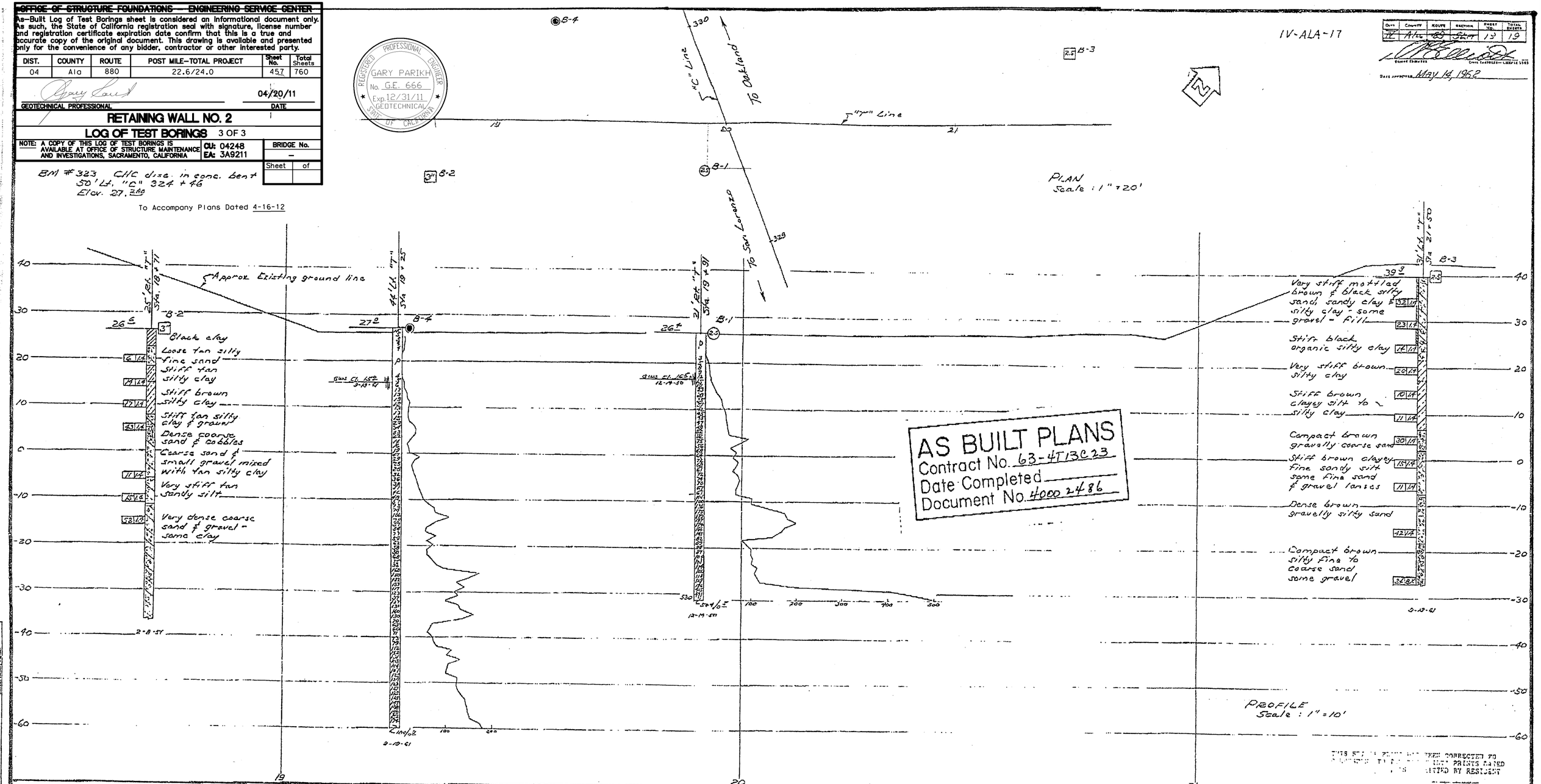

THIS SET OF PLANS HAS BEEN CORRECTED TO SHOW THE AS BUILT CONDITION BASED ON RED LINE PRINTS MARKED UP BY RESIDENT ENGINEER

DATE

CLASSIFICATION OF MATERIAL BASED ON STANDARD GRADE SIZE LIMITS

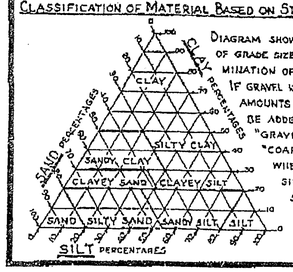

DIAGRAM SHOWING THE BASIS FOR ESTIMATES OF GRADE SIZE DISTRIBUTION USED IN DETERMINATION OF CLASS NAMES.

IF GRAVEL IS PRESENT IN APPRECIABLE AMOUNTS THE TERM "GRAVELLY" MAY BE ADDED TO THE CLASS NAME, VIZ. "GRAVELLY SAND." THE TERMS "COARSE," "MEDIUM" AND "FINE" WHEN USED TO DESCRIBE SAND, SILT AND GRAVEL REFER TO STANDARD GRADE SIZE LIMITS.

LEGEND OF EARTH MATERIALS

- GRAVEL
- SAND
- SILT
- CLAY
- SANDY CLAY OR CLAYEY SAND
- SANDY SILT OR SILTY SAND
- SILTY CLAY OR CLAYEY SILT
- PEAT AND/OR ORGANIC MATTER
- FILL MATERIAL
- IGNEOUS ROCK
- SEDIMENTARY ROCK
- METAMORPHIC ROCK

LEGEND OF BORING OPERATIONS

- PENETROMETER
- 2¼" CONE PENETROMEYER
- SAMPLER BORING (DRY)
- ROTARY BORING (WET)
- AUGER BORING (DRY)
- JET BORING
- CORE BORING
- TEST PIT

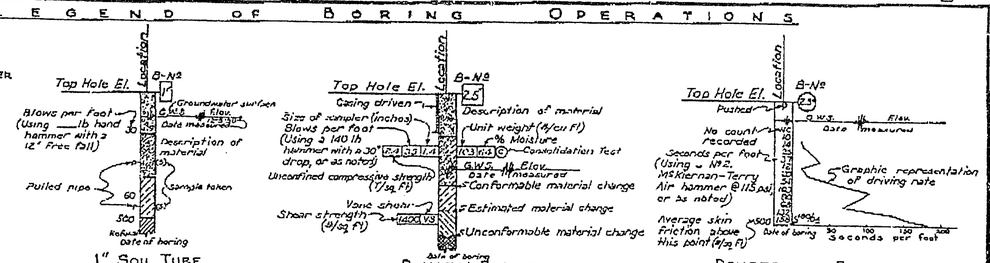

NOTE

Classification of earth material as shown on this sheet is based upon field inspection and is not to be construed to imply mechanical analysis.

STATE OF CALIFORNIA
DEPARTMENT OF PUBLIC WORKS
DIVISION OF HIGHWAYS

Marina Blvd. O.C.
~~FIRST AVENUE O.C.~~

LOG OF TEST BORINGS

SCALE	BRIDGE	FILE	DRAWING
As Noted	33-167		C-33167-19

BRIDGE DEPARTMENT

43a921qb006.tif

Dist	COUNTY	ROUTE	POST MILES TOTAL PROJECT	SHEET No.	TOTAL SHEETS
04	Ala	880	22.6/24.0	458	760

REGISTERED CIVIL ENGINEER 11-16-11 DATE

4-16-12
PLANS APPROVAL DATE

REGISTERED PROFESSIONAL ENGINEER B. RAZEGHI No. C52725 Exp. 12-31-12 CIVIL STATE OF CALIFORNIA

THE STATE OF CALIFORNIA OR ITS OFFICERS OR AGENTS SHALL NOT BE RESPONSIBLE FOR THE ACCURACY OR COMPLETENESS OF SCANNED COPIES OF THIS PLAN SHEET.

WMH CORPORATION
555 12th St
Suite 1900
Oakland, CA 94607

ACTC
1333 Broadway
Suites 220 & 300
Oakland, CA 94612

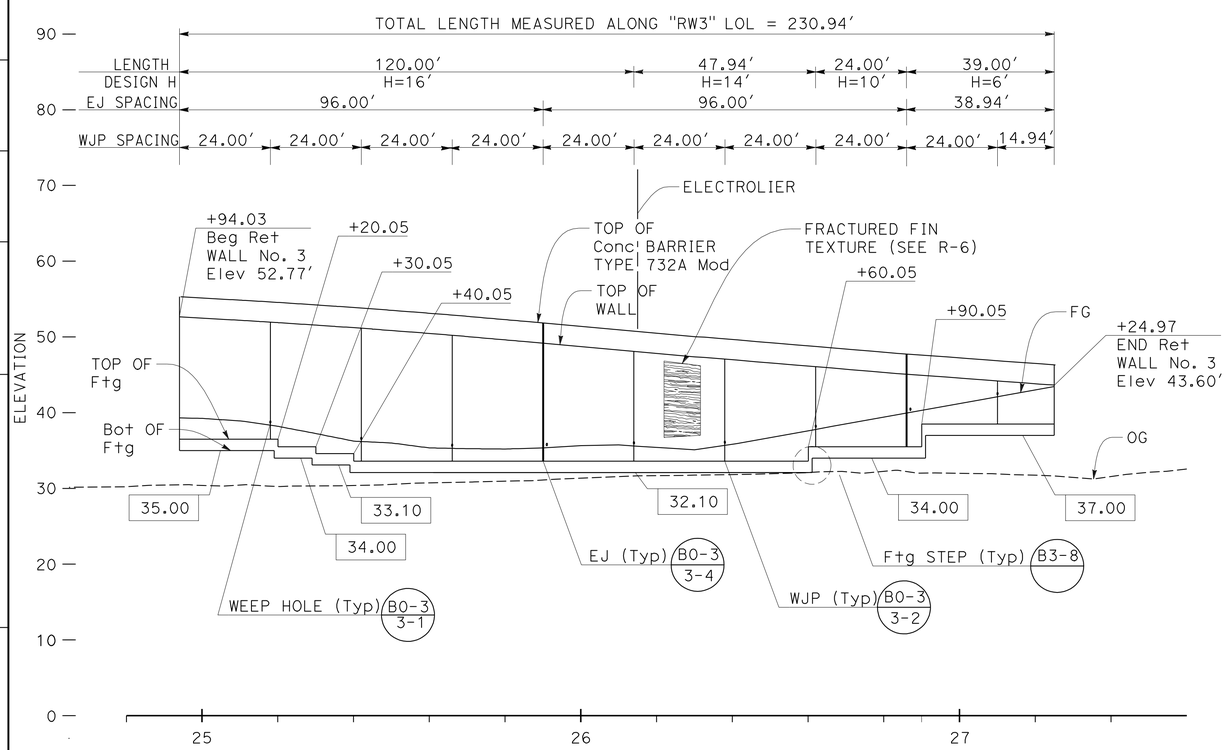

DEVELOPED ELEVATION

Horiz : 1" = 20'
Vert : 1" = 10'

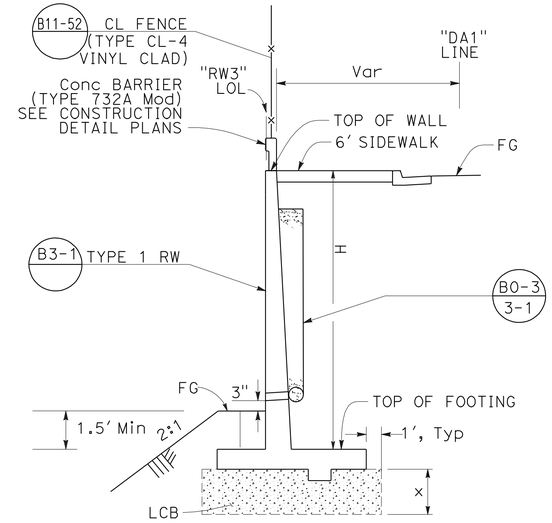

TYPICAL SECTION

NO SCALE

STRUCTURE EXCAVATION AND BACKFILL WITH LCB

STATION FROM	STATION TO	H	x
24+94.03	27+24.97	6' & 10'	0'
		14'	3'
		16'	3.5'

NOTE:

1. FOR CL FENCE POST POCKET, SEE Std PLAN B11-54.
2. FOR ELECTROLIER ANCHOR BOLTS DETAIL, SEE Std PLAN B11-54.

ABBREVIATIONS:

EJ EXPANSION JOINT
WJP WEAKENED PLANE

LEGEND:

STRUCTURE EXCAVATION AND BACKFILL WITH LCB

XX.XX Elev AT BOTTOM OF FOOTING

TOP OF WALL Elev

Sta	Elev
24+94.03	52.77
25+00.00	52.60
25+50.00	50.92
26+00.00	48.73
26+31.33	47.31
26+50.00	46.53
27+00.00	44.52
27+24.97	43.60

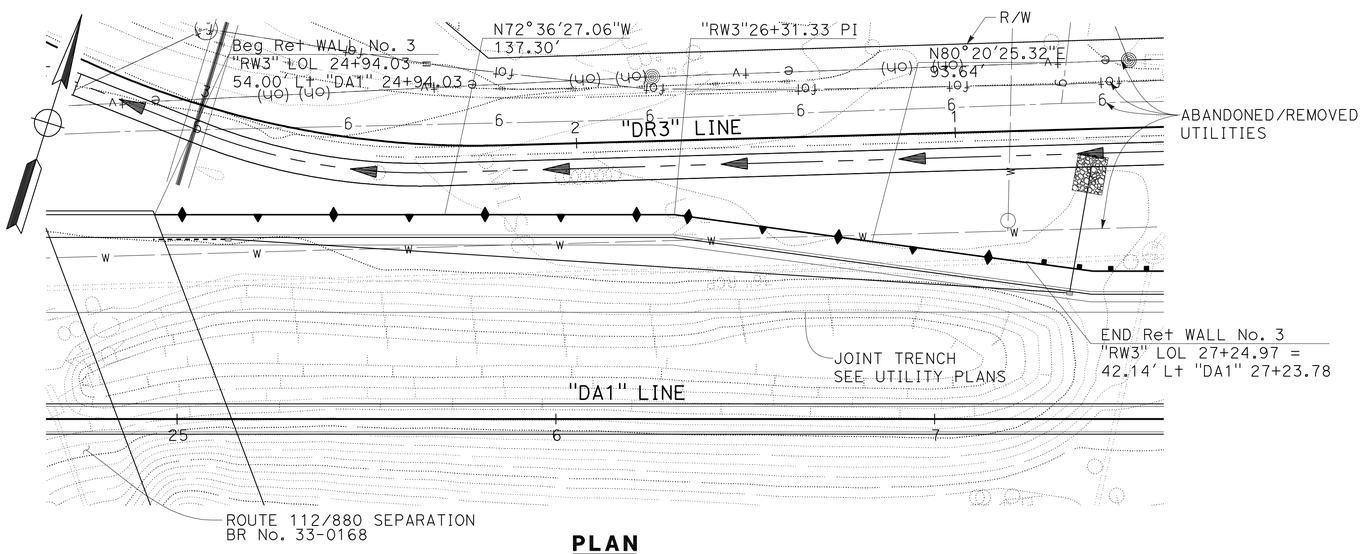

PLAN

SCALE : 1" = 20'

APPROVED FOR RETAINING WALL WORK ONLY

RETAINING WALL No. 3

RETAINING WALL PLAN

SCALE: AS SHOWN

R-19

STATE OF CALIFORNIA - DEPARTMENT OF TRANSPORTATION

Caltrans

TIMOTHY J. LEE | CONSULTANT FUNCTIONAL SUPERVISOR | CALCULATED-DESIGNED BY | CHECKED BY

BEN RAZEGHI | BERNARD ENRILE | REVISED BY | DATE REVISED | BE 5/12/10 | BE 6/01/11 | EIA 11/16/11

X:\880_Marina-Davis\000_CAD\Sheets\0000_Final PSE-Elec\ADDSubmittal\Final_Submittal_20111227\880MDRefMerge_20111226\EA04-309211_CADD-SUBMITTAL_20111227\43a921qc001.dgn

LAST REVISION 11-16-11 | DATE PLOTTED => 19-APR-2012 | TIME PLOTTED => 18:09

BORDER LAST REVISED 7/2/2010 | USERNAME => s123631 | DGN FILE => 43a921qc001.dgn | RELATIVE BORDER SCALE IS IN INCHES 0 1 2 3 | UNIT 0725 | PROJECT NUMBER & PHASE 04120003391

REFERENCE: CALTRANS SOIL & ROCK LOGGING, CLASSIFICATION, AND PRESENTATION MANUAL (2010)

DIST	COUNTY	ROUTE	POST MILES TOTAL PROJECT	SHEET No	TOTAL SHEETS
04	Ala	880	22.6/24.0	459	760

GEOTECHNICAL PROFESSIONAL — DATE 10/26/11

4-16-12
PLANS APPROVAL DATE

REGISTERED PROFESSIONAL ENGINEER — GARY PARIKH — No. G.E. 666 — Exp. 12/31/13 — GEOTECHNICAL — STATE OF CALIFORNIA

THE HNTB OR ITS OFFICERS OR AGENTS SHALL NOT BE RESPONSIBLE FOR THE ACCURACY OR COMPLETENESS OF SCANNED COPIES OF THIS PLAN SHEET.

ACTC
1333 BROADWAY, SUITES 220 & 300
OAKLAND, CA 94612

PARIKH CONSULTANTS, INC.
2360 QUME DRIVE, SUITE A
SAN JOSE, CA 95131

CEMENTATION

Description	Criteria
Weak	Crumbles or breaks with handling or little finger pressure.
Moderate	Crumbles or breaks with considerable finger pressure.
Strong	Will not crumble or break with finger pressure.

BOREHOLE IDENTIFICATION

Symbol	Hole Type	Description
Size	A	Auger Boring (hollow or solid stem bucket)
Size	R RW RC P	Rotary drilled boring (conventional) Rotary drilled with self-casing wire-line Rotary core with continuously-sampled, self-casing wire-line Rotary percussion boring (air)
Size	R	Rotary drilled diamond core
Size	HD HA	Hand driven (1-inch soil tube) Hand Auger
●	D	Dynamic Cone Penetration Boring
▲	CPT	Cone Penetration Test (ASTM D 5778)
⬚	O	Other (note on LOTB)

Note: Size in inches.

CONSISTENCY OF COHESIVE SOILS

Description	Shear Strength (tsf)	Pocket Penetrometer Measurement, PP, (tsf)	Torvane Measurement, TV, (tsf)	Vane Shear Measurement, VS, (tsf)
Very Soft	Less than 0.12	Less than 0.25	Less than 0.12	Less than 0.12
Soft	0.12 - 0.25	0.25 - 0.5	0.12 - 0.25	0.12 - 0.25
Medium Stiff	0.25 - 0.5	0.5 - 1	0.25 - 0.5	0.25 - 0.5
Stiff	0.5 - 1	1 - 2	0.5 - 1	0.5 - 1
Very Stiff	1 - 2	2 - 4	1 - 2	1 - 2
Hard	Greater than 2	Greater than 4	Greater than 2	Greater than 2

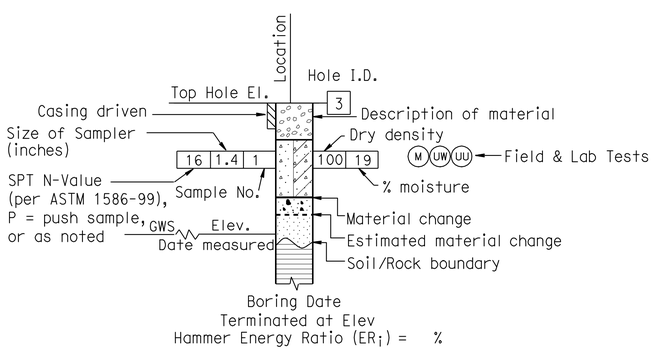

ROTARY BORING

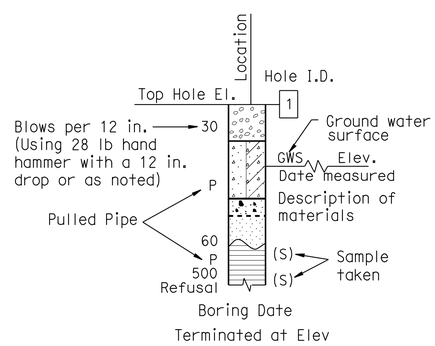

HAND BORING

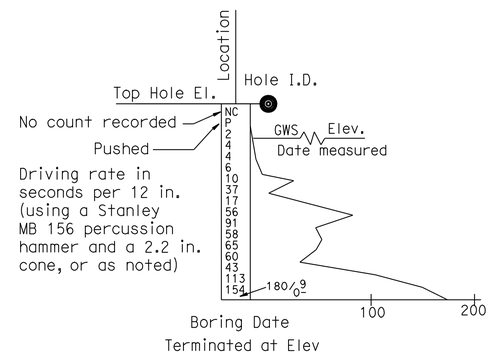

DYNAMIC CONE PENETRATION BORING

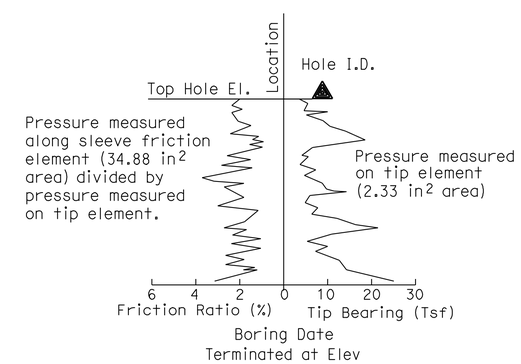

CONE PENETRATION TEST (CPT) BORING

SOIL LEGEND 1 OF 2

DESIGN OVERSIGHT	DRAWN BY	L. Tran	L. Bhangoo, G. Tripathi
SIGN OFF DATE	CHECKED BY	D. Wang	FIELD INVESTIGATION BY: DATE: June 2008

PREPARED FOR THE STATE OF CALIFORNIA DEPARTMENT OF TRANSPORTATION

David Wang
PROJECT ENGINEER

BRIDGE NO.
POST MILES 22.6/24.0

RETAINING WALL NO. 3 R-20
LOG OF TEST BORINGS

GS GEOTECHNICAL LOG OF TEST BORINGS SHEET (ENGLISH) (REV. 7/16/10)

ORIGINAL SCALE IN INCHES FOR REDUCED PLANS 0 1 2 3

CU: 04248
EA: 3A9211

DISREGARD PRINTS BEARING EARLIER REVISION DATES

REVISION DATES 9/22/09 4/26/11 10/24/11 — SHEET — OF

FILE => 43a921qc002.dgn

USERNAME => s123631 DATE PLOTTED => 19-APR-2012 TIME PLOTTED => 18:09

REFERENCE: CALTRANS SOIL & ROCK LOGGING, CLASSIFICATION, AND PRESENTATION MANUAL (2010)

GROUP SYMBOLS AND NAMES

Graphic/Symbol	Group Names	Graphic/Symbol	Group Names
GW	Well-graded GRAVEL Well-graded GRAVEL with SAND	CL	Lean CLAY Lean CLAY with SAND Lean CLAY with GRAVEL SANDY lean CLAY SANDY lean CLAY with GRAVEL GRAVELLY lean CLAY GRAVELLY lean CLAY with SAND
GP	Poorly-graded GRAVEL Poorly-graded GRAVEL with SAND		
GW-GM	Well-graded GRAVEL with SILT Well-graded GRAVEL with SILT and SAND	CL-ML	SILTY CLAY SILTY CLAY with SAND SILTY CLAY with GRAVEL SANDY SILTY CLAY SANDY SILTY CLAY with GRAVEL GRAVELLY SILTY CLAY GRAVELLY SILTY CLAY with SAND
GW-GC	Well-graded GRAVEL with CLAY (or SILTY CLAY) Well-graded GRAVEL with CLAY and SAND (or SILTY CLAY and SAND)		
GP-GM	Poorly-graded GRAVEL with SILT Poorly-graded GRAVEL with SILT and SAND	ML	SILT SILT with SAND SILT with GRAVEL SANDY SILT SANDY SILT with GRAVEL GRAVELLY SILT GRAVELLY SILT with SAND
GP-GC	Poorly-graded GRAVEL with CLAY (or SILTY CLAY) Poorly-graded GRAVEL with CLAY and SAND (or SILTY CLAY and SAND)		
GM	SILTY GRAVEL SILTY GRAVEL with SAND	OL	ORGANIC lean CLAY ORGANIC lean CLAY with SAND ORGANIC lean CLAY with GRAVEL SANDY ORGANIC lean CLAY SANDY ORGANIC lean CLAY with GRAVEL GRAVELLY ORGANIC lean CLAY GRAVELLY ORGANIC lean CLAY with SAND
GC	CLAYEY GRAVEL CLAYEY GRAVEL with SAND		
GC-GM	SILTY, CLAYEY GRAVEL SILTY, CLAYEY GRAVEL with SAND	OL	ORGANIC SILT ORGANIC SILT with SAND ORGANIC SILT with GRAVEL SANDY ORGANIC SILT SANDY ORGANIC SILT with GRAVEL GRAVELLY ORGANIC SILT GRAVELLY ORGANIC SILT with SAND
SW	Well-graded SAND Well-graded SAND with GRAVEL		
SP	Poorly-graded SAND Poorly-graded SAND with GRAVEL	CH	Fat CLAY Fat CLAY with SAND Fat CLAY with GRAVEL SANDY fat CLAY SANDY fat CLAY with GRAVEL GRAVELLY fat CLAY GRAVELLY fat CLAY with SAND
SW-SM	Well-graded SAND with SILT Well-graded SAND with SILT and GRAVEL		
SW-SC	Well-graded SAND with CLAY (or SILTY CLAY) Well-graded SAND with CLAY and GRAVEL (or SILTY CLAY and GRAVEL)	MH	Elastic SILT Elastic SILT with SAND Elastic SILT with GRAVEL SANDY elastic SILT SANDY elastic SILT with GRAVEL GRAVELLY elastic SILT GRAVELLY elastic SILT with SAND
SP-SM	Poorly-graded SAND with SILT Poorly-graded SAND with SILT and GRAVEL		
SP-SC	Poorly-graded SAND with CLAY (or SILTY CLAY) Poorly-graded SAND with CLAY and GRAVEL (or SILTY CLAY and GRAVEL)	OH	ORGANIC fat CLAY ORGANIC fat CLAY with SAND ORGANIC fat CLAY with GRAVEL SANDY ORGANIC fat CLAY SANDY ORGANIC fat CLAY with GRAVEL GRAVELLY ORGANIC fat CLAY GRAVELLY ORGANIC fat CLAY with SAND
SM	SILTY SAND SILTY SAND with GRAVEL		
SC	CLAYEY SAND CLAYEY SAND with GRAVEL	OH	ORGANIC elastic SILT ORGANIC elastic SILT with SAND ORGANIC elastic SILT with GRAVEL SANDY ORGANIC elastic SILT SANDY ORGANIC elastic SILT with GRAVEL GRAVELLY ORGANIC elastic SILT GRAVELLY ORGANIC elastic SILT with SAND
SC-SM	SILTY, CLAYEY SAND SILTY, CLAYEY SAND with GRAVEL		
PT	PEAT	OL/OH	ORGANIC SOIL ORGANIC SOIL with SAND ORGANIC SOIL with GRAVEL SANDY ORGANIC SOIL SANDY ORGANIC SOIL with GRAVEL GRAVELLY ORGANIC SOIL GRAVELLY ORGANIC SOIL with SAND
	COBBLES COBBLES and BOULDERS BOULDERS		

FIELD AND LABORATORY TESTING

- (C) Consolidation (ASTM D 2435)
- (CL) Collapse Potential (ASTM D 5333)
- (CP) Compaction Curve (CTM 216)
- (CR) Corrosivity Testing (CTM 643, CTM 422, CTM 417)
- (CU) Consolidated Undrained Triaxial (ASTM D 4767)
- (DS) Direct Shear (ASTM D 3080)
- (EI) Expansion Index (ASTM D 4829)
- (M) Moisture Content (ASTM D 2216)
- (OC) Organic Content-% (ASTM D 2974)
- (P) Permeability (CTM 220)
- (PA) Particle Size Analysis (ASTM D 422)
- (PI) Plasticity Index (AASHTO T 90) Liquid Limit (AASHTO T 89)
- (PL) Point Load Index (ASTM D 5731)
- (PM) Pressure Meter
- (R) R-Value (CTM 301)
- (SE) Sand Equivalent (CTM 217)
- (SG) Specific Gravity (AASHTO T 100)
- (SL) Shrinkage Limit (ASTM D 427)
- (SW) Swell Potential (ASTM D 4546)
- (UC) Unconfined Compression-Soil (ASTM D 2166) Unconfined Compression-Rock (ASTM D 2938)
- (UU) Unconsolidated Undrained Triaxial (ASTM D 2850)
- (UW) Unit Weight (ASTM D 4767)

DIST	COUNTY	ROUTE	POST MILES TOTAL PROJECT	SHEET No	TOTAL SHEETS
04	Ala	880	22.6/24.0	460	760

GEOTECHNICAL PROFESSIONAL — DATE 10/26/11

4-16-12
PLANS APPROVAL DATE

REGISTERED PROFESSIONAL ENGINEER — GARY PARIKH — No. G.E. 666 — Exp. 12/31/13 — GEOTECHNICAL — STATE OF CALIFORNIA

THE HNTB OR ITS OFFICERS OR AGENTS SHALL NOT BE RESPONSIBLE FOR THE ACCURACY OR COMPLETENESS OF SCANNED COPIES OF THIS PLAN SHEET.

ACTC
1333 BROADWAY, SUITES 220 & 300
OAKLAND, CA 94612

PARIKH CONSULTANTS, INC.
2360 QUME DRIVE, SUITE A
SAN JOSE, CA 95131

APPARENT DENSITY OF COHESIONLESS SOILS

Description	SPT N_{60} (Blows / 12 in.)
Very Loose	0 - 5
Loose	5 - 10
Medium Dense	10 - 30
Dense	30 - 50
Very Dense	Greater than 50

MOISTURE

Description	Criteria
Dry	No discernable moisture
Moist	Moisture present, but no free water
Wet	Visible free water

PERCENT OR PROPORTION OF SOILS

Description	Criteria
Trace	Particles are present but estimated to be less than 5%
Few	5% - 10%
Little	15% - 25%
Some	30% - 45%
Mostly	50% - 100%

PARTICLE SIZE

Description		Size (in.)
Boulder		Greater than 12
Cobble		3 - 12
Gravel	Coarse	3/4 - 3
	Fine	1/5 - 3/4
Sand	Coarse	1/16 - 1/5
	Medium	1/64 - 1/16
	Fine	1/300 - 1/64
Silt and Clay		Less than 1/300

SOIL LEGEND 2 OF 2

DESIGN OVERSIGHT
SIGN OFF DATE

DRAWN BY L. Tran
CHECKED BY D. Wang

L. Bhangoo, G. Tripathi
FIELD INVESTIGATION BY:
DATE: June 2008

PREPARED FOR THE STATE OF CALIFORNIA DEPARTMENT OF TRANSPORTATION

David Wang
PROJECT ENGINEER

BRIDGE NO.
POST MILES 22.6/24.0

RETAINING WALL NO. 3 R-21
LOG OF TEST BORINGS

GS GEOTECHNICAL LOG OF TEST BORINGS SHEET (ENGLISH) (REV. 7/16/10)

ORIGINAL SCALE IN INCHES FOR REDUCED PLANS 0 1 2 3

CU: 04248
EA: 3A9211

DISREGARD PRINTS BEARING EARLIER REVISION DATES

REVISION DATES — SHEET — OF

FILE => 43a921qc003.dgn

USERNAME => s123631 DATE PLOTTED => 19-APR-2012 TIME PLOTTED => 18:09

DIST	COUNTY	ROUTE	POST MILES TOTAL PROJECT	SHEET No	TOTAL SHEETS
04	Ala	880	22.6/24.0	461	760

GEOTECHNICAL PROFESSIONAL — DATE 10/26/11

4-16-12
PLANS APPROVAL DATE

REGISTERED PROFESSIONAL ENGINEER — GARY PARIKH — No. G.E. 666 — Exp. 12/31/13 — GEOTECHNICAL — STATE OF CALIFORNIA

THE HNTB OR ITS OFFICERS OR AGENTS SHALL NOT BE RESPONSIBLE FOR THE ACCURACY OR COMPLETENESS OF SCANNED COPIES OF THIS PLAN SHEET.

ACTC
1333 BROADWAY, SUITES 220 & 300
OAKLAND, CA 94612

PARIKH CONSULTANTS, INC.
2360 QUME DRIVE, SUITE A
SAN JOSE, CA 95131

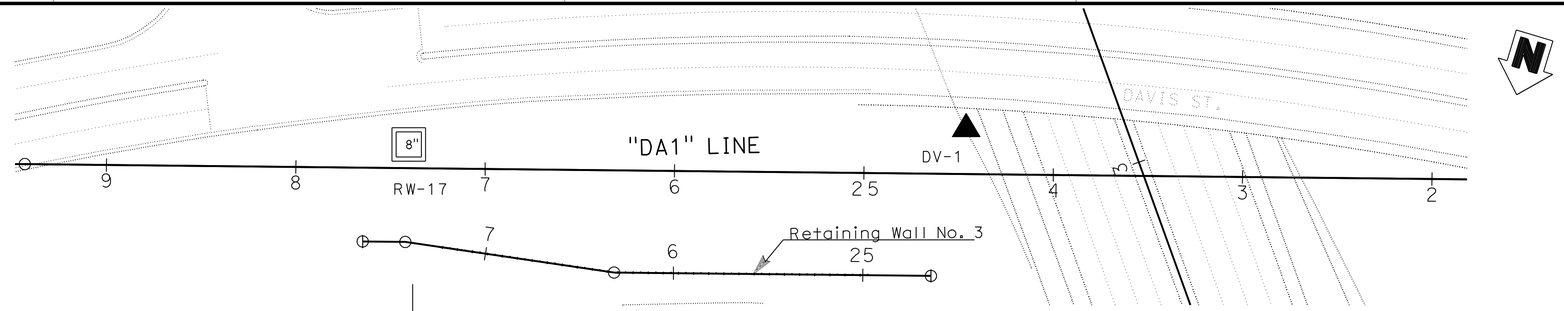

PLAN
1" = 40'

Note:
Standard Penetration Test Sampler: I.D. = 1.4"; O.D. = 2"
Modified California Sampler: I.D. = 2.5"; O.D. = 3"
Hammer Assembly: A 140 lb hammer with a 30" drop (Automatic Hammer)

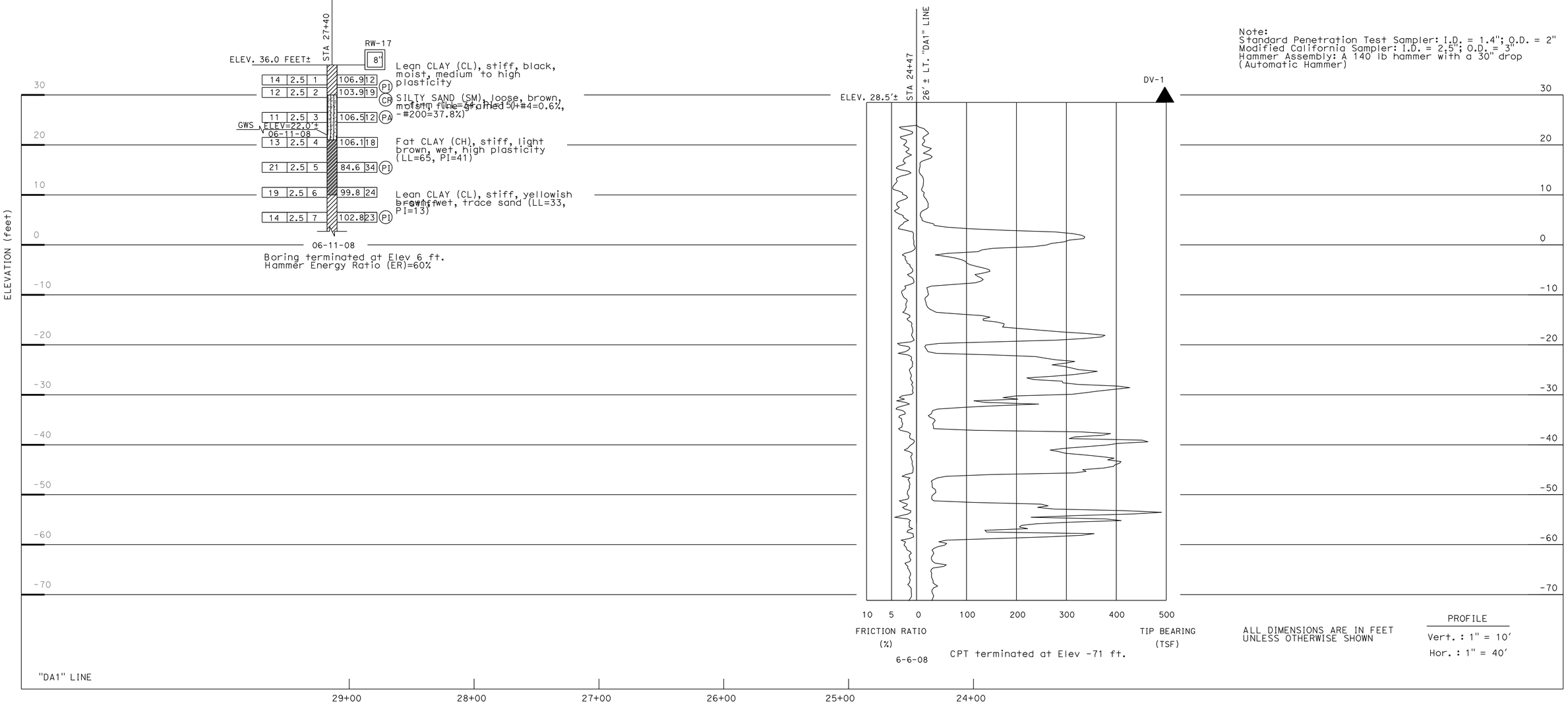

ALL DIMENSIONS ARE IN FEET UNLESS OTHERWISE SHOWN

PROFILE
Vert. : 1" = 10'
Hor. : 1" = 40'

DESIGN OVERSIGHT	DRAWN BY	L. Tran	L. Bhangoo, G. Tripathi — FIELD INVESTIGATION BY:
SIGN OFF DATE	CHECKED BY	D. Wang	DATE: June 2008

PREPARED FOR THE STATE OF CALIFORNIA DEPARTMENT OF TRANSPORTATION

David Wang — PROJECT ENGINEER

BRIDGE NO.
POST MILES 22.6/24.0

RETAINING WALL NO. 3 R-22
LOG OF TEST BORINGS 1 OF 2

GS GEOTECHNICAL LOG OF TEST BORINGS SHEET (ENGLISH) (REV. 7/16/10)

ORIGINAL SCALE IN INCHES FOR REDUCED PLANS 0 1 2 3

CU: 04248
EA: 3A9211

DISREGARD PRINTS BEARING EARLIER REVISION DATES

REVISION DATES — SHEET — OF

FILE => 43a921qc004.dgn

USERNAME => s123631 DATE PLOTTED => 19-APR-2012 TIME PLOTTED => 18:03

Note:
The As-Built Log of Test Boring sheets were used to prepare the geotechnical report.

10-24-94
TO ACCOMPANY PLANS DATED

DIST.	COUNTY	ROUTE	POST MILES TOTAL PROJECT	SHEET NO.	TOTAL SHEETS
04	Ala	112,580	0.5/1.4, 32.3/37.8	29	66

GEOTECHNICAL PROFESSIONAL
-/14/94
PLANS APPROVAL DATE
PSC ASSOCIATES, INC.
200 BLOSSOM LANE
MT. VIEW, CA. 94041

REGISTERED PROFESSIONAL ENGINEER No. 172 Exp. 7/31/97 GEOTECHNICAL STATE OF CALIFORNIA

The State of California or its officers or agents shall not be responsible for the accuracy or completeness of electronic copies of this plan sheet.

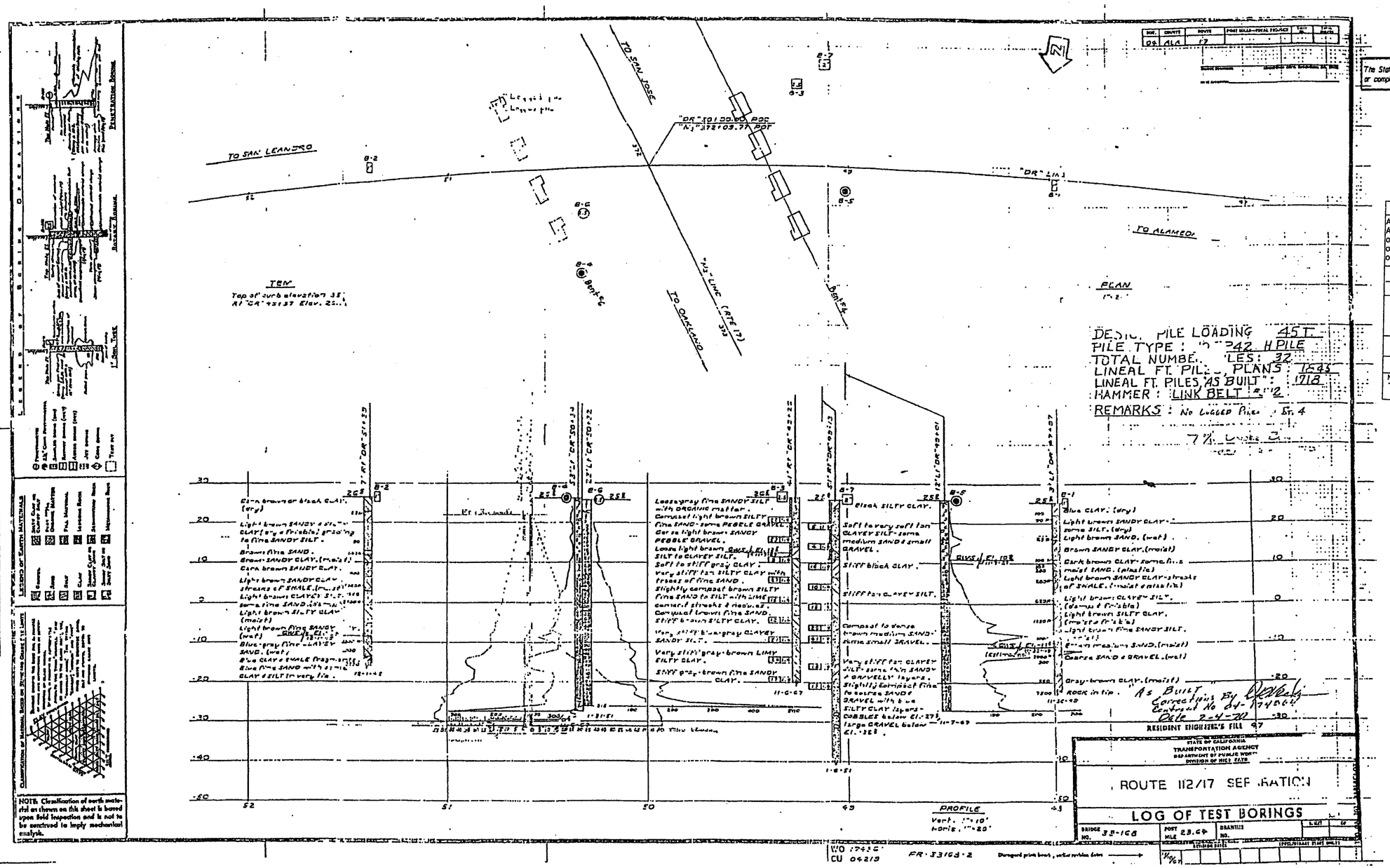

To Accompany Plans Dated 4-16-12

OFFICE OF STRUCTURE FOUNDATIONS – ENGINEERING SERVICE CENTER

As-Built Log of Test Borings sheet is considered an informational document only. As such, the State of California registration seal with signature, license number and registration certificate expiration date confirm that this is a true and accurate copy of the original document. This drawing is available and presented only for the convenience of any bidder, contractor or other interested party.

DIST.	COUNTY	ROUTE	POST MILE-TOTAL PROJECT	Sheet No.	Total Sheets
04	Ala	880	22.6/24.0	462	760

GEOTECHNICAL PROFESSIONAL — DATE 4/20/11

RETAINING WALL NO. 3

LOG OF TEST BORINGS 2 OF 2

NOTE: A COPY OF THIS LOG OF TEST BORINGS IS AVAILABLE AT OFFICE OF STRUCTURE MAINTENANCE AND INVESTIGATIONS, SACRAMENTO, CALIFORNIA

CU: 04248
EA: 3A9211

BRIDGE No. –
Sheet of

REGISTERED PROFESSIONAL ENGINEER GARY PARIKH No. G.E. 666 Exp. 12/31/11 GEOTECHNICAL STATE OF CALIFORNIA

NO AS BUILT CHANGES

AS BUILT

CORRECTIONS BY R. Fowler

CONTRACT NO. 04-174844

DATE 7/10/96 thru 20 Jan 97

NOTE:
THE CONTRACTOR SHALL VERIFY ALL CONTROLLING FIELD DIMENSIONS BEFORE ORDERING OR FABRICATING ANY MATERIAL

DE AKINSANYA AA
SIGN OVERSIGHT
9/24/94
OFF DATE

NOTE:
ADDITIONAL AS-BUILT FOUNDATION DATA MAY BE AVAILABLE AT THE DIVISION OF NEW TECHNOLOGY, MATERIALS AND RESEARCH 5900 FOLSOM BOULEVARD, SACRAMENTO, CALIFORNIA 95819

DESIGN	G.P. KENNING	CHECKED	T.M GOOLKASIAN
DETAILS	N.H. VILLEGAS	CHECKED	S.F. WADE
QUANTITIES	T. FENG	CHECKED	G.P. KENNING

PREPARED FOR THE
STATE OF CALIFORNIA
DEPARTMENT OF TRANSPORTATION

T.M. GOOLKASIAN
PROJECT ENGINEER

ORIGINAL SCALE IN INCHES FOR REDUCED PLANS 0 1 2 3

CU 04
EA 140101

BRIDGE NO. 33-168
POST MILE 0.47

DISREGARD PRINTS BEARING EARLIER REVISION DATES

REVISION DATES (PRELIMINARY STAGE ONLY) 11/10/87 3/11/94 3/25/94

SHEET 9 OF 9

EARTHQUAKE RETROFIT PROJECT NO. 90

ROUTE 112/880 SEPARATION

AS-BUILT LOG OF TEST BORINGS

FILENAME => 43a921qc005.tif

Dist	COUNTY	ROUTE	POST MILES TOTAL PROJECT	SHEET No.	TOTAL SHEETS
04	Ala	880	22.6/24.0	463	760

REGISTERED CIVIL ENGINEER 11-16-11 DATE

4-16-12
PLANS APPROVAL DATE

REGISTERED PROFESSIONAL ENGINEER B. RAZEGHI No. C52725 Exp. 12-31-12 CIVIL STATE OF CALIFORNIA

THE STATE OF CALIFORNIA OR ITS OFFICERS OR AGENTS SHALL NOT BE RESPONSIBLE FOR THE ACCURACY OR COMPLETENESS OF SCANNED COPIES OF THIS PLAN SHEET.

WMH CORPORATION
555 12th St
Suite 1900
Oakland, CA 94607

ACTC
1333 Broadway
Suites 220 & 300
Oakland, CA 94612

NOTE:
1. FOR CL FENCE POST POCKET, SEE Std PLAN (B11-54).

ABBREVIATIONS:
EJ EXPANSION JOINT
WJP WEAKENED PLANE

LEGEND:
XX.XX Elev AT BOTTOM OF FOOTING

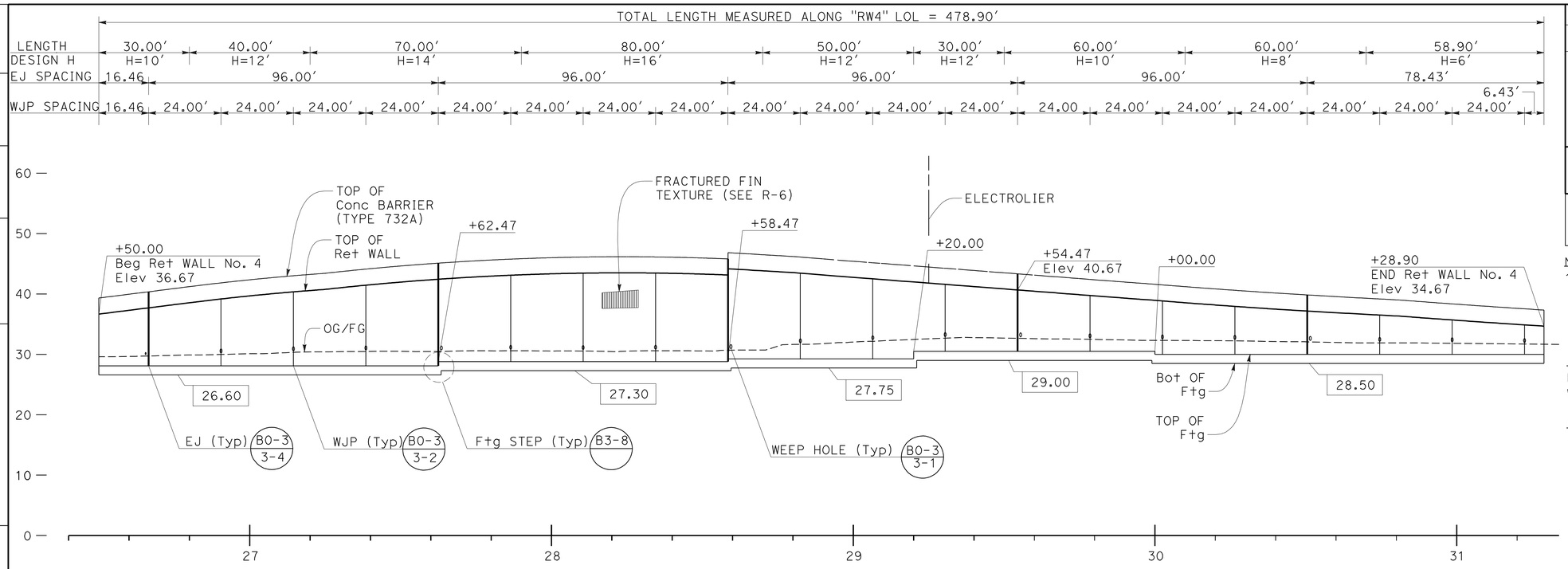

DEVELOPED ELEVATION

Horiz : 1" = 20'
Vert : 1" = 10'

TOP OF WALL Elev

Sta	Elev
26+50.00	36.67
27+00.00	39.69
27+50.00	41.97
28+00.00	43.35
28+50.00	43.30
28+58.47	43.16
28+58.47	44.19
29+00.00	42.76
29+50.00	40.84
30+00.00	38.94
30+43.82	37.37
30+50.00	37.19
31+00.00	35.64
31+28.90	34.67

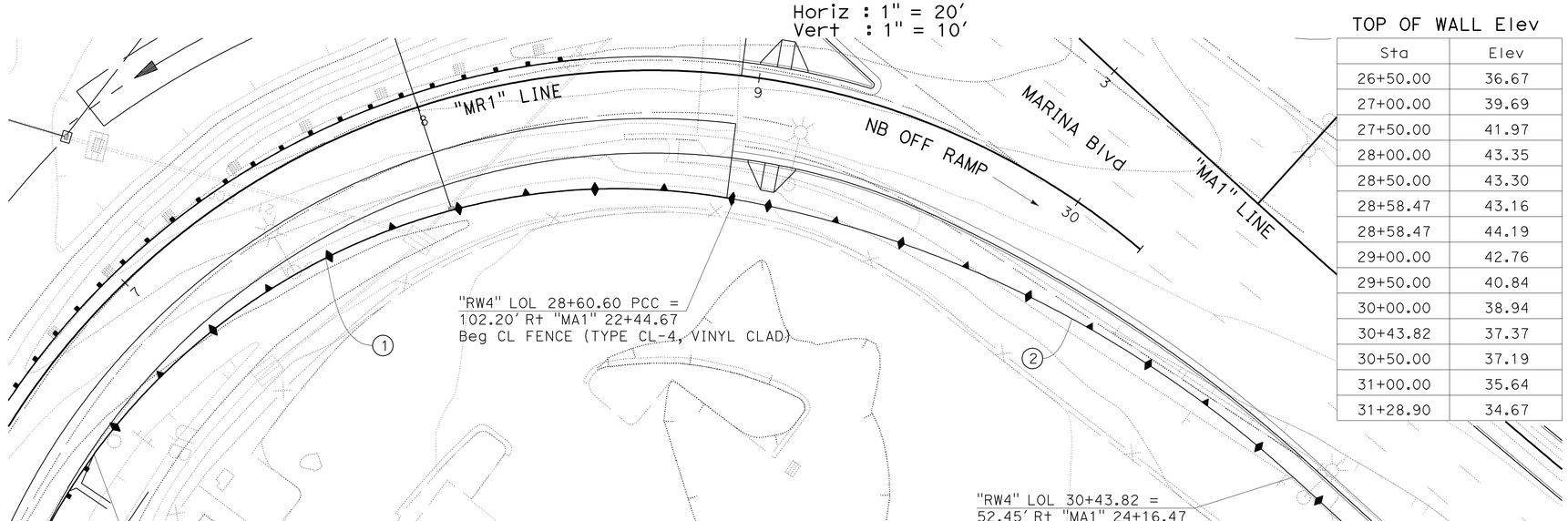

PLAN

SCALE : 1" = 20'

CURVE DATA

No.	R	Δ	T	L
1	188.25'	74°52'09.48"	144.11'	245.99'
2	329.19'	31°38'37.60"	93.29'	181.81'

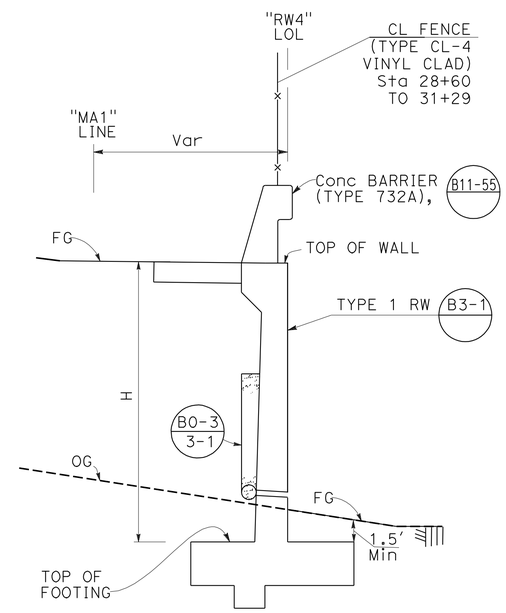

TYPICAL SECTION

NO SCALE

APPROVED FOR RETAINING WALL WORK ONLY

RETAINING WALL No. 4

RETAINING WALL PLAN

SCALE: AS SHOWN

R-24

REVISED BY	DATE REVISED
EIA	11/16/11
BE	6/01/11
BE	5/12/10

BERNARD ENRILE — BEN RAZEGHI — CALCULATED-DESIGNED BY — CHECKED BY

CONSULTANT FUNCTIONAL SUPERVISOR: TIMOTHY J. LEE

STATE OF CALIFORNIA - DEPARTMENT OF TRANSPORTATION — Caltrans

X:\880_Marina-Davis\000_CAD\Sheets\0000_Final PSE-ElecCADDSubmittal\Final_Submittal_20111227\880MDRefMerge_20111226\EA04-3a9211_CADD-SUBMITTAL_20111227\43a921qd001.dgn

LAST REVISION 11-16-11 | DATE PLOTTED => 19-APR-2012 | TIME PLOTTED => 18:09

REFERENCE: CALTRANS SOIL & ROCK LOGGING, CLASSIFICATION, AND PRESENTATION MANUAL (2010)

DIST	COUNTY	ROUTE	POST MILES TOTAL PROJECT	SHEET No	TOTAL SHEETS
04	Ala	880	22.6/24.0	464	760

GEOTECHNICAL PROFESSIONAL — DATE 10/26/11

4-16-12
PLANS APPROVAL DATE

REGISTERED PROFESSIONAL ENGINEER — GARY PARIKH — No. G.E. 666 — Exp. 12/31/13 — GEOTECHNICAL — STATE OF CALIFORNIA

THE HNTB OR ITS OFFICERS OR AGENTS SHALL NOT BE RESPONSIBLE FOR THE ACCURACY OR COMPLETENESS OF SCANNED COPIES OF THIS PLAN SHEET.

ACTC
1333 BROADWAY, SUITES 220 & 300
OAKLAND, CA 94612

PARIKH CONSULTANTS, INC.
2360 QUME DRIVE, SUITE A
SAN JOSE, CA 95131

CEMENTATION

Description	Criteria
Weak	Crumbles or breaks with handling or little finger pressure.
Moderate	Crumbles or breaks with considerable finger pressure.
Strong	Will not crumble or break with finger pressure.

BOREHOLE IDENTIFICATION

Symbol	Hole Type	Description
Size	A	Auger Boring (hollow or solid stem bucket)
Size	R RW RC P	Rotary drilled boring (conventional) Rotary drilled with self-casing wire-line Rotary core with continuously-sampled, self-casing wire-line Rotary percussion boring (air)
Size	R	Rotary drilled diamond core
Size	HD HA	Hand driven (1-inch soil tube) Hand Auger
●	D	Dynamic Cone Penetration Boring
▲	CPT	Cone Penetration Test (ASTM D 5778)
⬚	O	Other (note on LOTB)

Note: Size in inches.

CONSISTENCY OF COHESIVE SOILS

Description	Shear Strength (tsf)	Pocket Penetrometer Measurement, PP, (tsf)	Torvane Measurement, TV, (tsf)	Vane Shear Measurement, VS, (tsf)
Very Soft	Less than 0.12	Less than 0.25	Less than 0.12	Less than 0.12
Soft	0.12 - 0.25	0.25 - 0.5	0.12 - 0.25	0.12 - 0.25
Medium Stiff	0.25 - 0.5	0.5 - 1	0.25 - 0.5	0.25 - 0.5
Stiff	0.5 - 1	1 - 2	0.5 - 1	0.5 - 1
Very Stiff	1 - 2	2 - 4	1 - 2	1 - 2
Hard	Greater than 2	Greater than 4	Greater than 2	Greater than 2

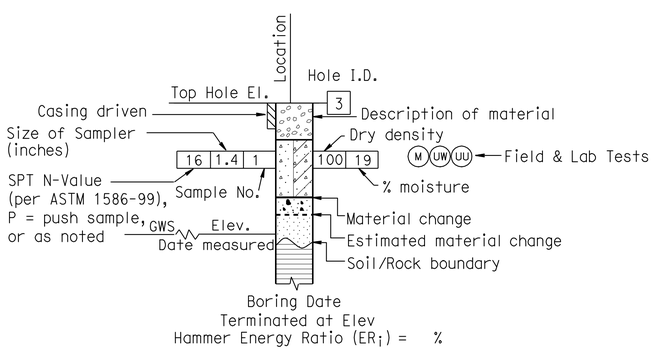

ROTARY BORING

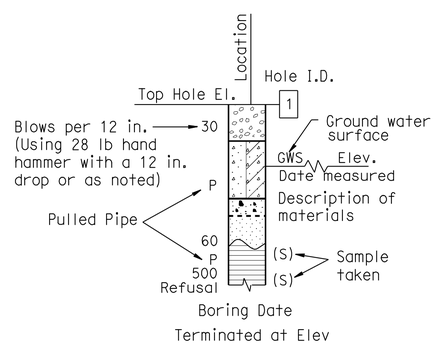

HAND BORING

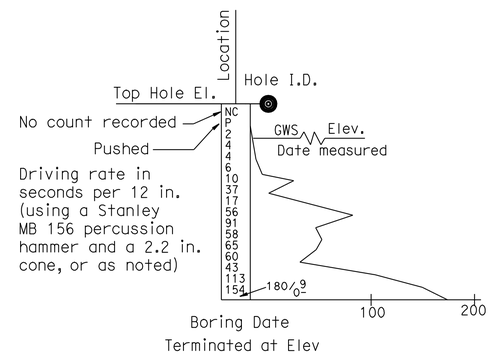

DYNAMIC CONE PENETRATION BORING

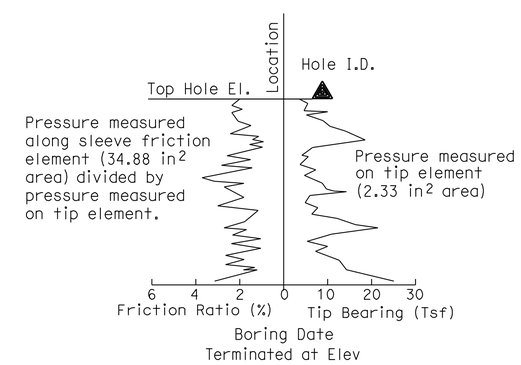

CONE PENETRATION TEST (CPT) BORING

SOIL LEGEND 1 OF 2

DESIGN OVERSIGHT	DRAWN BY	L. Tran	L. Bhangoo, G. Tripathi FIELD INVESTIGATION BY:
SIGN OFF DATE	CHECKED BY	D. Wang	DATE: June 2008

PREPARED FOR THE STATE OF CALIFORNIA DEPARTMENT OF TRANSPORTATION

David Wang
PROJECT ENGINEER

BRIDGE NO.
POST MILES 22.6/24.0

RETAINING WALL NO. 4 R-25
LOG OF TEST BORINGS

GS GEOTECHNICAL LOG OF TEST BORINGS SHEET (ENGLISH) (REV. 7/16/10)

ORIGINAL SCALE IN INCHES FOR REDUCED PLANS 0 1 2 3

CU: 04248
EA: 3A9211

DISREGARD PRINTS BEARING EARLIER REVISION DATES — REVISION DATES 9/22/09 4/20/11 10/24/11 — SHEET — OF

FILE => 43a921qd002.dgn

USERNAME => s123631 DATE PLOTTED => 19-APR-2012 TIME PLOTTED => 18:09

REFERENCE: CALTRANS SOIL & ROCK LOGGING, CLASSIFICATION, AND PRESENTATION MANUAL (2010)

DIST	COUNTY	ROUTE	POST MILES TOTAL PROJECT	SHEET No	TOTAL SHEETS
04	Ala	880	22.6/24.0	465	760

GEOTECHNICAL PROFESSIONAL — DATE 10/26/11

4-16-12
PLANS APPROVAL DATE

REGISTERED PROFESSIONAL ENGINEER — GARY PARIKH — No. G.E. 666 — Exp. 12/31/13 — GEOTECHNICAL — STATE OF CALIFORNIA

THE HNTB OR ITS OFFICERS OR AGENTS SHALL NOT BE RESPONSIBLE FOR THE ACCURACY OR COMPLETENESS OF SCANNED COPIES OF THIS PLAN SHEET.

ACTC
1333 BROADWAY, SUITES 220 & 300
OAKLAND, CA 94612

PARIKH CONSULTANTS, INC.
2360 QUME DRIVE, SUITE A
SAN JOSE, CA 95131

GROUP SYMBOLS AND NAMES

Graphic/Symbol	Group Names	Graphic/Symbol	Group Names
GW	Well-graded GRAVEL Well-graded GRAVEL with SAND	CL	Lean CLAY Lean CLAY with SAND Lean CLAY with GRAVEL SANDY lean CLAY SANDY lean CLAY with GRAVEL GRAVELLY lean CLAY GRAVELLY lean CLAY with SAND
GP	Poorly-graded GRAVEL Poorly-graded GRAVEL with SAND		
GW-GM	Well-graded GRAVEL with SILT Well-graded GRAVEL with SILT and SAND	CL-ML	SILTY CLAY SILTY CLAY with SAND SILTY CLAY with GRAVEL SANDY SILTY CLAY SANDY SILTY CLAY with GRAVEL GRAVELLY SILTY CLAY GRAVELLY SILTY CLAY with SAND
GW-GC	Well-graded GRAVEL with CLAY (or SILTY CLAY) Well-graded GRAVEL with CLAY and SAND (or SILTY CLAY and SAND)		
GP-GM	Poorly-graded GRAVEL with SILT Poorly-graded GRAVEL with SILT and SAND	ML	SILT SILT with SAND SILT with GRAVEL SANDY SILT SANDY SILT with GRAVEL GRAVELLY SILT GRAVELLY SILT with SAND
GP-GC	Poorly-graded GRAVEL with CLAY (or SILTY CLAY) Poorly-graded GRAVEL with CLAY and SAND (or SILTY CLAY and SAND)		
GM	SILTY GRAVEL SILTY GRAVEL with SAND	OL	ORGANIC lean CLAY ORGANIC lean CLAY with SAND ORGANIC lean CLAY with GRAVEL SANDY ORGANIC lean CLAY SANDY ORGANIC lean CLAY with GRAVEL GRAVELLY ORGANIC lean CLAY GRAVELLY ORGANIC lean CLAY with SAND
GC	CLAYEY GRAVEL CLAYEY GRAVEL with SAND		
GC-GM	SILTY, CLAYEY GRAVEL SILTY, CLAYEY GRAVEL with SAND	OL	ORGANIC SILT ORGANIC SILT with SAND ORGANIC SILT with GRAVEL SANDY ORGANIC SILT SANDY ORGANIC SILT with GRAVEL GRAVELLY ORGANIC SILT GRAVELLY ORGANIC SILT with SAND
SW	Well-graded SAND Well-graded SAND with GRAVEL		
SP	Poorly-graded SAND Poorly-graded SAND with GRAVEL	CH	Fat CLAY Fat CLAY with SAND Fat CLAY with GRAVEL SANDY fat CLAY SANDY fat CLAY with GRAVEL GRAVELLY fat CLAY GRAVELLY fat CLAY with SAND
SW-SM	Well-graded SAND with SILT Well-graded SAND with SILT and GRAVEL		
SW-SC	Well-graded SAND with CLAY (or SILTY CLAY) Well-graded SAND with CLAY and GRAVEL (or SILTY CLAY and GRAVEL)	MH	Elastic SILT Elastic SILT with SAND Elastic SILT with GRAVEL SANDY elastic SILT SANDY elastic SILT with GRAVEL GRAVELLY elastic SILT GRAVELLY elastic SILT with SAND
SP-SM	Poorly-graded SAND with SILT Poorly-graded SAND with SILT and GRAVEL		
SP-SC	Poorly-graded SAND with CLAY (or SILTY CLAY) Poorly-graded SAND with CLAY and GRAVEL (or SILTY CLAY and GRAVEL)	OH	ORGANIC fat CLAY ORGANIC fat CLAY with SAND ORGANIC fat CLAY with GRAVEL SANDY ORGANIC fat CLAY SANDY ORGANIC fat CLAY with GRAVEL GRAVELLY ORGANIC fat CLAY GRAVELLY ORGANIC fat CLAY with SAND
SM	SILTY SAND SILTY SAND with GRAVEL		
SC	CLAYEY SAND CLAYEY SAND with GRAVEL	OH	ORGANIC elastic SILT ORGANIC elastic SILT with SAND ORGANIC elastic SILT with GRAVEL SANDY ORGANIC elastic SILT SANDY ORGANIC elastic SILT with GRAVEL GRAVELLY ORGANIC elastic SILT GRAVELLY ORGANIC elastic SILT with SAND
SC-SM	SILTY, CLAYEY SAND SILTY, CLAYEY SAND with GRAVEL		
PT	PEAT	OL/OH	ORGANIC SOIL ORGANIC SOIL with SAND ORGANIC SOIL with GRAVEL SANDY ORGANIC SOIL SANDY ORGANIC SOIL with GRAVEL GRAVELLY ORGANIC SOIL GRAVELLY ORGANIC SOIL with SAND
	COBBLES COBBLES and BOULDERS BOULDERS		

FIELD AND LABORATORY TESTING

- (C) Consolidation (ASTM D 2435)
- (CL) Collapse Potential (ASTM D 5333)
- (CP) Compaction Curve (CTM 216)
- (CR) Corrosivity Testing (CTM 643, CTM 422, CTM 417)
- (CU) Consolidated Undrained Triaxial (ASTM D 4767)
- (DS) Direct Shear (ASTM D 3080)
- (EI) Expansion Index (ASTM D 4829)
- (M) Moisture Content (ASTM D 2216)
- (OC) Organic Content-% (ASTM D 2974)
- (P) Permeability (CTM 220)
- (PA) Particle Size Analysis (ASTM D 422)
- (PI) Plasticity Index (AASHTO T 90) Liquid Limit (AASHTO T 89)
- (PL) Point Load Index (ASTM D 5731)
- (PM) Pressure Meter
- (R) R-Value (CTM 301)
- (SE) Sand Equivalent (CTM 217)
- (SG) Specific Gravity (AASHTO T 100)
- (SL) Shrinkage Limit (ASTM D 427)
- (SW) Swell Potential (ASTM D 4546)
- (UC) Unconfined Compression-Soil (ASTM D 2166) Unconfined Compression-Rock (ASTM D 2938)
- (UU) Unconsolidated Undrained Triaxial (ASTM D 2850)
- (UW) Unit Weight (ASTM D 4767)

APPARENT DENSITY OF COHESIONLESS SOILS

Description	SPT N_{60} (Blows / 12 in.)
Very Loose	0 - 5
Loose	5 - 10
Medium Dense	10 - 30
Dense	30 - 50
Very Dense	Greater than 50

MOISTURE

Description	Criteria
Dry	No discernable moisture
Moist	Moisture present, but no free water
Wet	Visible free water

PERCENT OR PROPORTION OF SOILS

Description	Criteria
Trace	Particles are present but estimated to be less than 5%
Few	5% - 10%
Little	15% - 25%
Some	30% - 45%
Mostly	50% - 100%

PARTICLE SIZE

Description		Size (in.)
Boulder		Greater than 12
Cobble		3 - 12
Gravel	Coarse	3/4 - 3
	Fine	1/5 - 3/4
Sand	Coarse	1/16 - 1/5
	Medium	1/64 - 1/16
	Fine	1/300 - 1/64
Silt and Clay		Less than 1/300

SOIL LEGEND 2 OF 2

DESIGN OVERSIGHT
SIGN OFF DATE

DRAWN BY L. Tran
CHECKED BY D. Wang

L. Bhangoo, G. Tripathi
FIELD INVESTIGATION BY:
DATE: June 2008

PREPARED FOR THE STATE OF CALIFORNIA DEPARTMENT OF TRANSPORTATION

David Wang
PROJECT ENGINEER

BRIDGE NO.
POST MILES 22.6/24.0

RETAINING WALL NO. 4 R-26
LOG OF TEST BORINGS

GS GEOTECHNICAL LOG OF TEST BORINGS SHEET (ENGLISH) (REV. 7/16/10)

ORIGINAL SCALE IN INCHES FOR REDUCED PLANS 0 1 2 3

CU: 04248
EA: 3A9211

DISREGARD PRINTS BEARING EARLIER REVISION DATES

REVISION DATES — SHEET — OF

FILE => 43a921qd003.dgn

USERNAME => s123631 DATE PLOTTED => 19-APR-2012 TIME PLOTTED => 18:10

DIST	COUNTY	ROUTE	POST MILES TOTAL PROJECT	SHEET No	TOTAL SHEETS
04	Ala	880	22.6/24.0	466	760

GEOTECHNICAL PROFESSIONAL — DATE 10/26/11

4-16-12
PLANS APPROVAL DATE

REGISTERED PROFESSIONAL ENGINEER — GARY PARIKH — No. G.E. 666 — Exp. 12/31/13 — GEOTECHNICAL — STATE OF CALIFORNIA

THE HNTB OR ITS OFFICERS OR AGENTS SHALL NOT BE RESPONSIBLE FOR THE ACCURACY OR COMPLETENESS OF SCANNED COPIES OF THIS PLAN SHEET.

ACTC
1333 BROADWAY, SUITES 220 & 300
OAKLAND, CA 94612

PARIKH CONSULTANTS, INC.
2360 QUME DRIVE, SUITE A
SAN JOSE, CA 95131

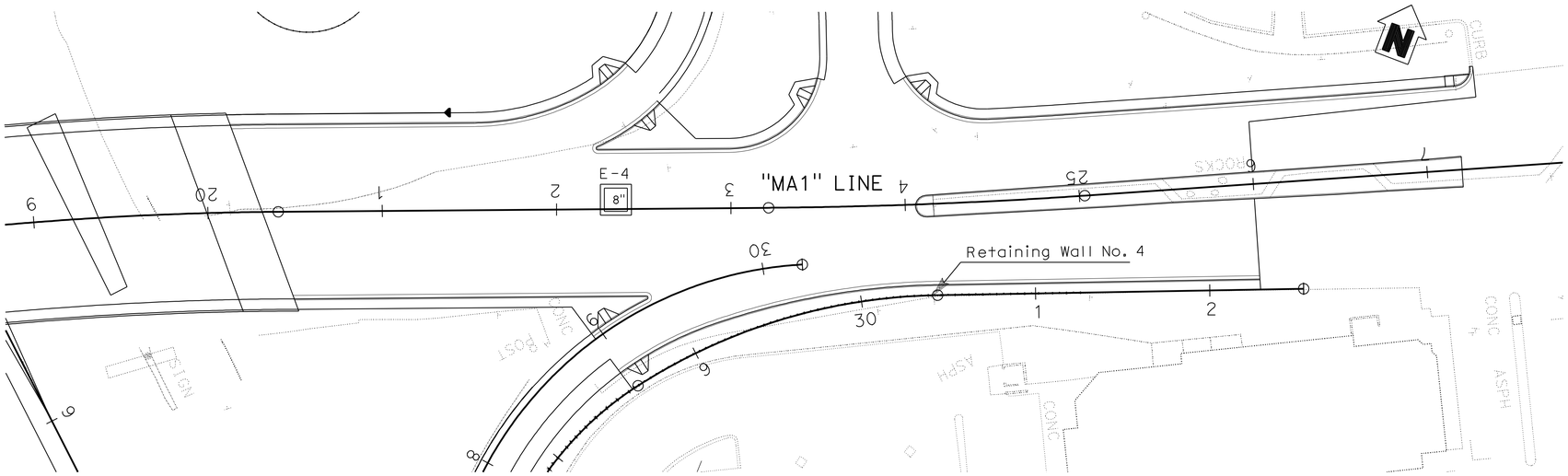

PLAN
1" = 40'

Note: Standard Penetration Test Sampler: I.D. = 1.4"; O.D. = 2"
Modified California Sampler: I.D. = 2.5"; O.D. = 3"
Hammer Assembly: A 140 lb hammer with a 30" drop (Automatic Hammer)

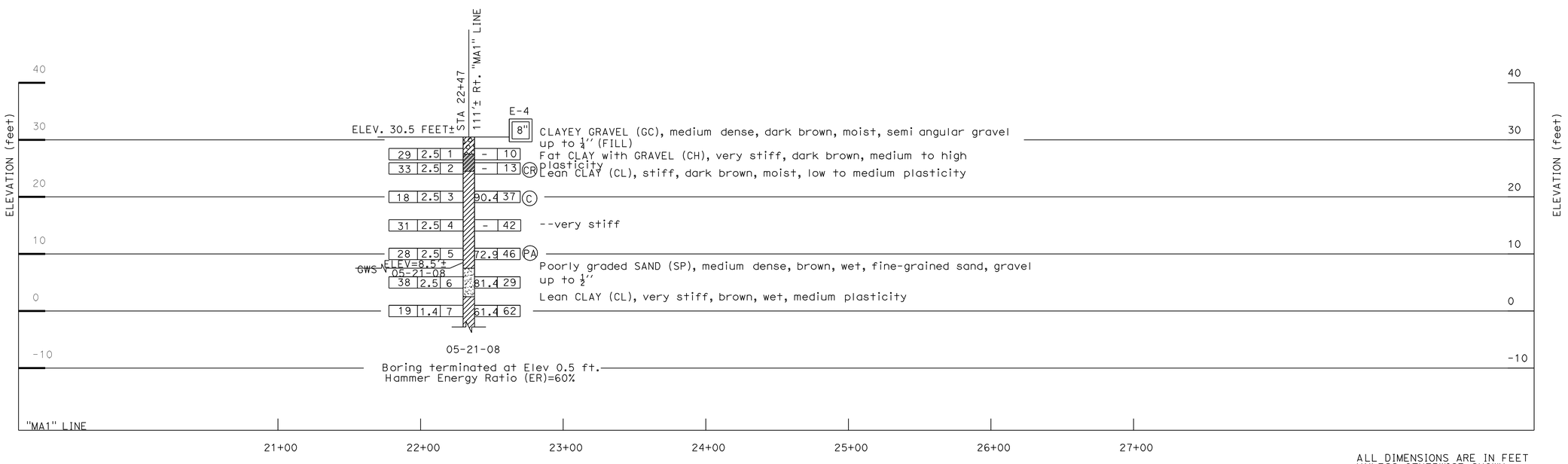

ALL DIMENSIONS ARE IN FEET UNLESS OTHERWISE SHOWN

PROFILE
Vert. : 1" = 10'
Hor. : 1" = 40'

DESIGN OVERSIGHT	DRAWN BY	L. Tran	L. Bhangoo, G. Tripathi — FIELD INVESTIGATION BY:
SIGN OFF DATE	CHECKED BY	D. Wang	DATE: June 2008

PREPARED FOR THE STATE OF CALIFORNIA DEPARTMENT OF TRANSPORTATION

David Wang — PROJECT ENGINEER

BRIDGE NO.
POST MILES 22.6/24.0

RETAINING WALL NO. 4 R-27
LOG OF TEST BORINGS

GS GEOTECHNICAL LOG OF TEST BORINGS SHEET (ENGLISH) (REV. 7/16/10)

ORIGINAL SCALE IN INCHES FOR REDUCED PLANS 0 1 2 3

CU: 04248
EA: 3A9211

DISREGARD PRINTS BEARING EARLIER REVISION DATES

REVISION DATES — SHEET — OF

FILE => 43a921qd004.dgn

USERNAME => s123631 DATE PLOTTED => 19-APR-2012 TIME PLOTTED => 18:10

Dist	COUNTY	ROUTE	POST MILES TOTAL PROJECT	SHEET No.	TOTAL SHEETS
04	Ala	880	22.6/24.0	467	760

REGISTERED CIVIL ENGINEER 11-16-11 DATE

4-16-12
PLANS APPROVAL DATE

REGISTERED PROFESSIONAL ENGINEER B. RAZEGHI No. C52725 Exp. 12-31-12 CIVIL STATE OF CALIFORNIA

THE STATE OF CALIFORNIA OR ITS OFFICERS OR AGENTS SHALL NOT BE RESPONSIBLE FOR THE ACCURACY OR COMPLETENESS OF SCANNED COPIES OF THIS PLAN SHEET.

WMH CORPORATION
555 12th St
Suite 1900
Oakland, CA 94607

ACTC
1333 Broadway
Suites 220 & 300
Oakland, CA 94612

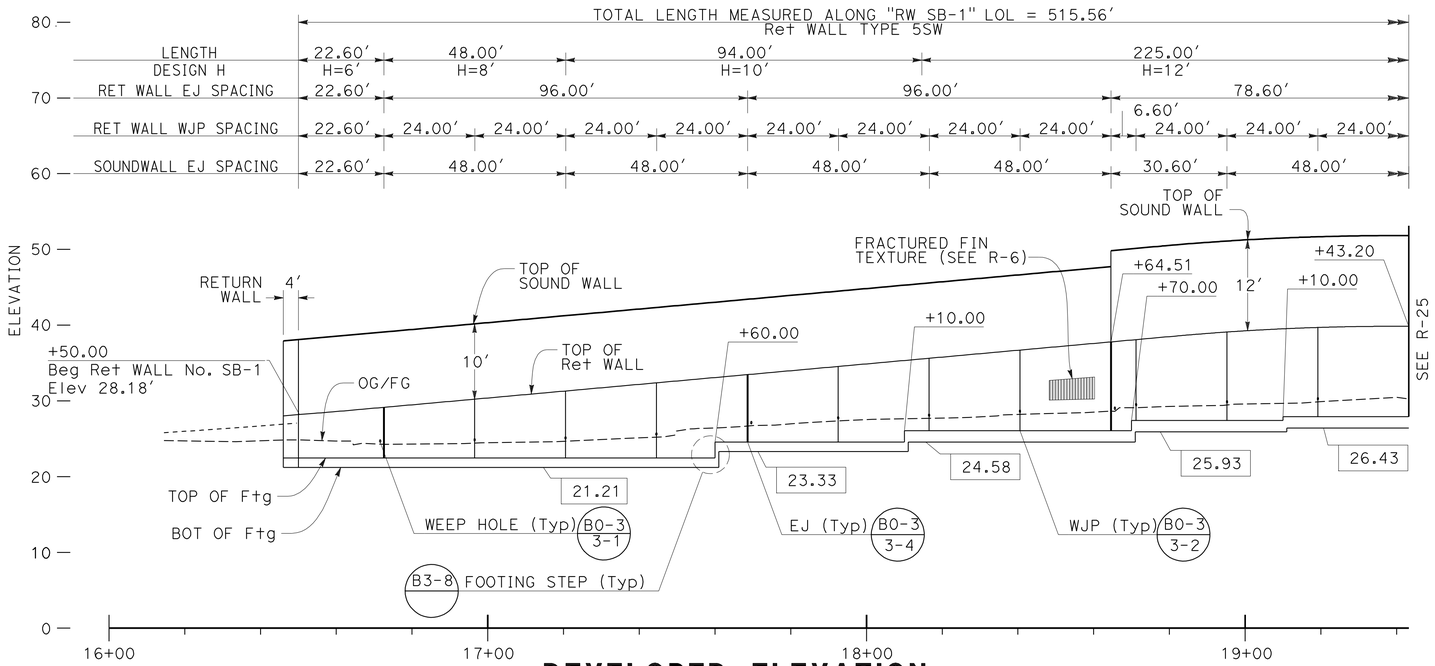

DEVELOPED ELEVATION

Vert: 1"=10'
Horiz: 1"=20'

NOTES:

1. EXPANSION JOINT AND WEAKEND PLANE PER Std PLAN B0-3.
2. TO MINIMIZE THE EXPOSURE OF FREEWAY CONSTRUCTION NOISE TO EXISTING PROPERTIES, REMOVE AND REPLACE EXISTING SOUND WALL ALONG ONE PROPERTY AT A TIME.

ABBREVIATIONS

EJ EXPANSION JOINT
WJP WEAKENED PLANE

LEGEND

XX.XX Elev AT BOTTOM OF FOOTING

TOP OF RETAINING WALL Elev

Sta	Elev
16+50.00	28.18
17+00.00	30.38
17+50.00	32.63
18+00.00	34.88
18+50.00	37.14
18+64.51	37.79
19+00.00	39.24
19+43.20	39.82
19+50.00	39.79
20+00.00	38.61
20+27.23	37.74
20+50.00	36.77
21+00.00	34.30
21+50.00	30.61
21+65.15	29.40

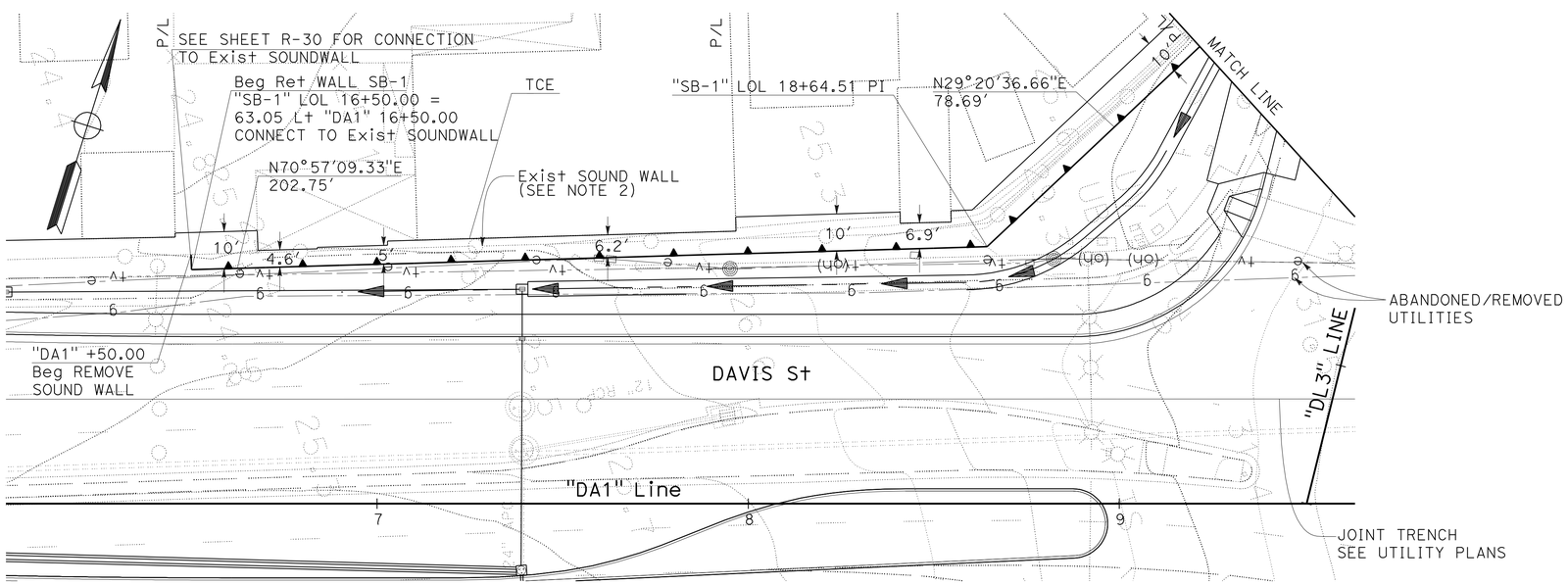

PLAN

1"=20'

APPROVED FOR RETAINING WALL WORK ONLY

RETAINING WALL PLAN
RETAINING WALL SB-1
R-28

STATE OF CALIFORNIA - DEPARTMENT OF TRANSPORTATION
Caltrans

CONSULTANT FUNCTIONAL SUPERVISOR: TIMOTHY J. LEE
CALCULATED-DESIGNED BY: E. ANJORIN
CHECKED BY: BEN RAZEGHI
REVISED BY: GKS
DATE REVISED: 12/14/11

LAST REVISION 11-16-11
DATE PLOTTED => 25-APR-2012
TIME PLOTTED => 11:38

X:\880_Marina-Davis\000_CAD\Sheets\0000_Final\PSE-Elec\ADDSubmittal\Final_Submittal_20111227\880MDReMerge_20111226\EA04-3g9211_CADD-SUBMITTAL_20111227\43g921qe001.dgn

Dist	COUNTY	ROUTE	POST MILES TOTAL PROJECT	SHEET No.	TOTAL SHEETS
04	Ala	880	22.6/24.0	468	760

REGISTERED CIVIL ENGINEER 11-16-11 DATE

4-16-12
PLANS APPROVAL DATE

REGISTERED PROFESSIONAL ENGINEER B. RAZEGHI No. C52725 Exp. 12-31-12 CIVIL STATE OF CALIFORNIA

THE STATE OF CALIFORNIA OR ITS OFFICERS OR AGENTS SHALL NOT BE RESPONSIBLE FOR THE ACCURACY OR COMPLETENESS OF SCANNED COPIES OF THIS PLAN SHEET.

WMH CORPORATION
555 12th St
Suite 1900
Oakland, CA 94607

ACTC
1333 Broadway
Suites 220 & 300
Oakland, CA 94612

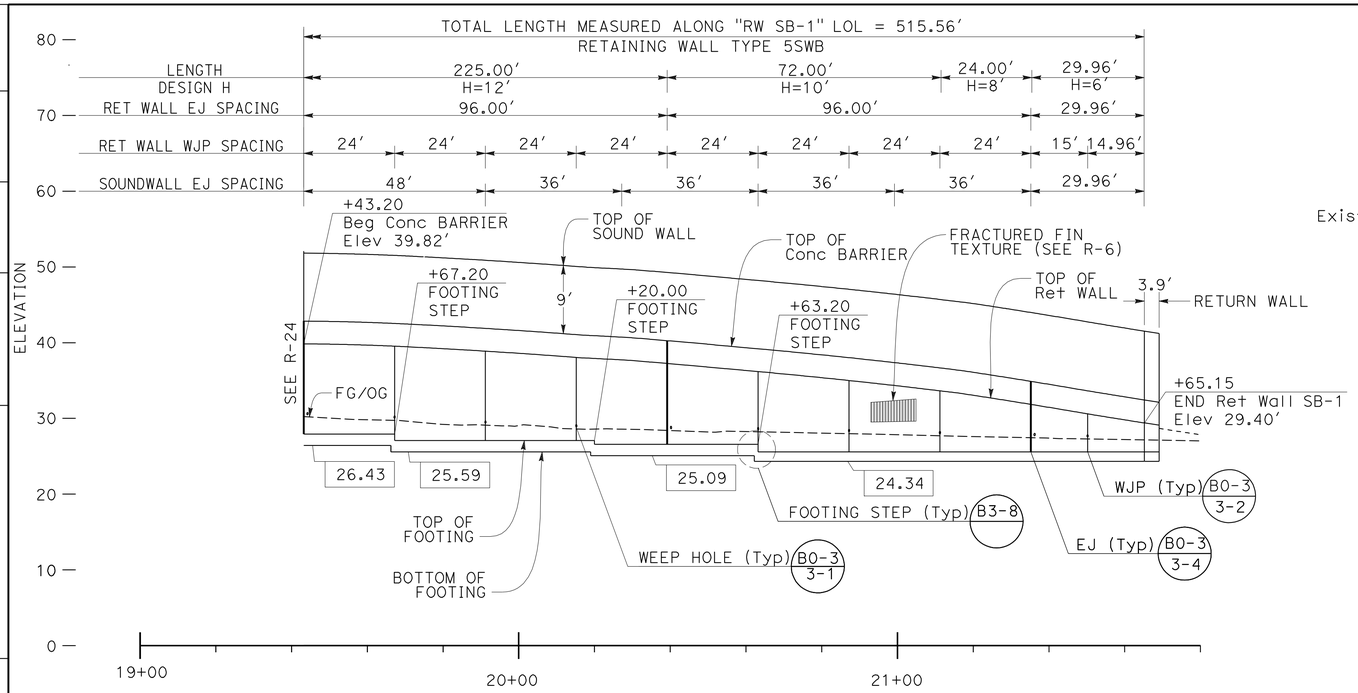

DEVELOPED ELEVATION

Vert: 1"=10'
Horiz: 1"=20'

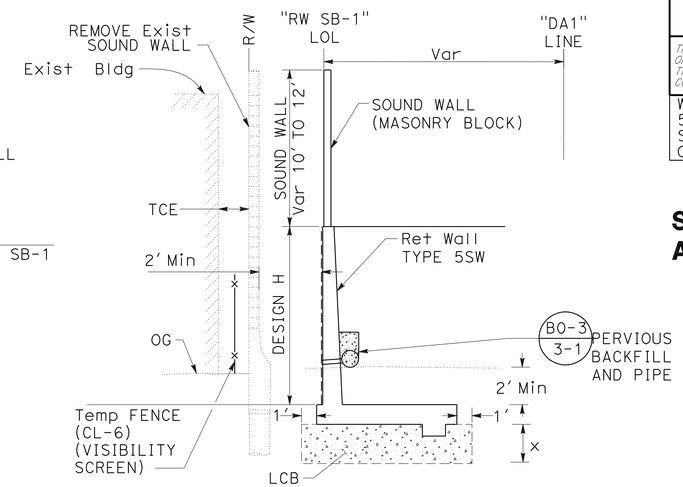

"RW SB-1" LOL 16+50.00 TO 19+43.20

TYPICAL SECTION

NO SCALE

STRUCTURE EXCAVATION AND BACKFILL WITH LCB

STATION FROM	STATION TO	H	x
16+50.00	21+65.15	8' & 10'	2'
		12'	3.5'

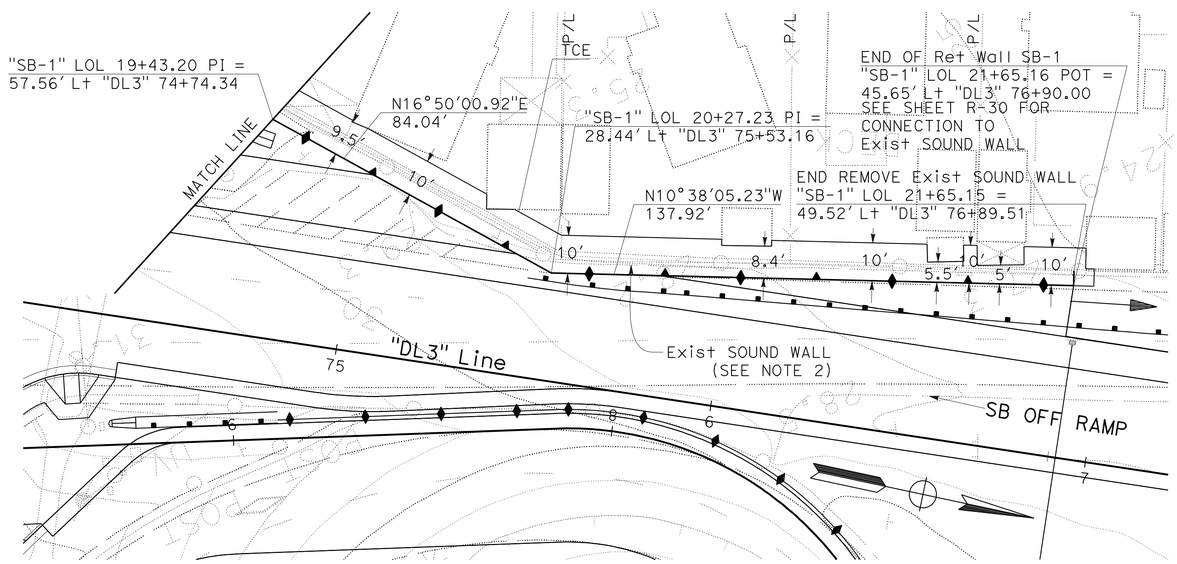

PLAN

SCALE: 1"=20'

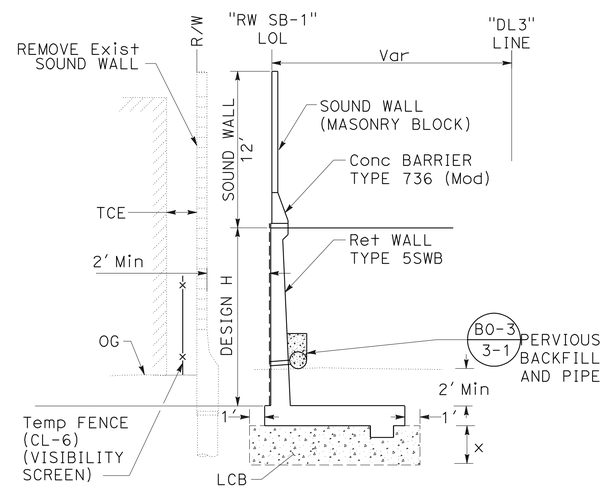

"RW SB-1" LOL 19+43.20 TO 21+65.15

TYPICAL SECTION

NO SCALE

RETAINING WALL PLAN
RETAINING WALL SB-1

APPROVED FOR RETAINING WALL WORK ONLY

R-29

STATE OF CALIFORNIA - DEPARTMENT OF TRANSPORTATION
Caltrans

CONSULTANT FUNCTIONAL SUPERVISOR: TIMOTHY J. LEE
CALCULATED-DESIGNED BY: E. ANJORIN
CHECKED BY: BEN RAZEGHI
REVISED BY: GKS
DATE REVISED: 12/14/11

X:\880_Marina-Davis\000_CAD\Sheets\0000_Final\PSE-Elec\ADDSubmittal\Final_Submittal_20111227\880MReMerge_20111226\EA04-3g9211_CADD-SUBMITTAL_20111227\43g921qe002.dgn

LAST REVISION 11-16-11 | DATE PLOTTED => 19-APR-2012 | TIME PLOTTED => 8:10

BORDER LAST REVISED 7/2/2010 | USERNAME => s123631 | DGN FILE => 43g921qe002.dgn | RELATIVE BORDER SCALE IS IN INCHES 0 1 2 3 | UNIT 0725 | PROJECT NUMBER & PHASE 04120003391

Dist	COUNTY	ROUTE	POST MILES TOTAL PROJECT	SHEET No.	TOTAL SHEETS
04	Ala	880	22.6/24.0	469	760

REGISTERED CIVIL ENGINEER 11-16-11 DATE

4-16-12
PLANS APPROVAL DATE

REGISTERED PROFESSIONAL ENGINEER B. RAZEGHI No. C52725 Exp. 12-31-12 CIVIL STATE OF CALIFORNIA

THE STATE OF CALIFORNIA OR ITS OFFICERS OR AGENTS SHALL NOT BE RESPONSIBLE FOR THE ACCURACY OR COMPLETENESS OF SCANNED COPIES OF THIS PLAN SHEET.

WMH CORPORATION
555 12th St
Suite 1900
Oakland, CA 94607

ACTC
1333 Broadway
Suites 220 & 300
Oakland, CA 94612

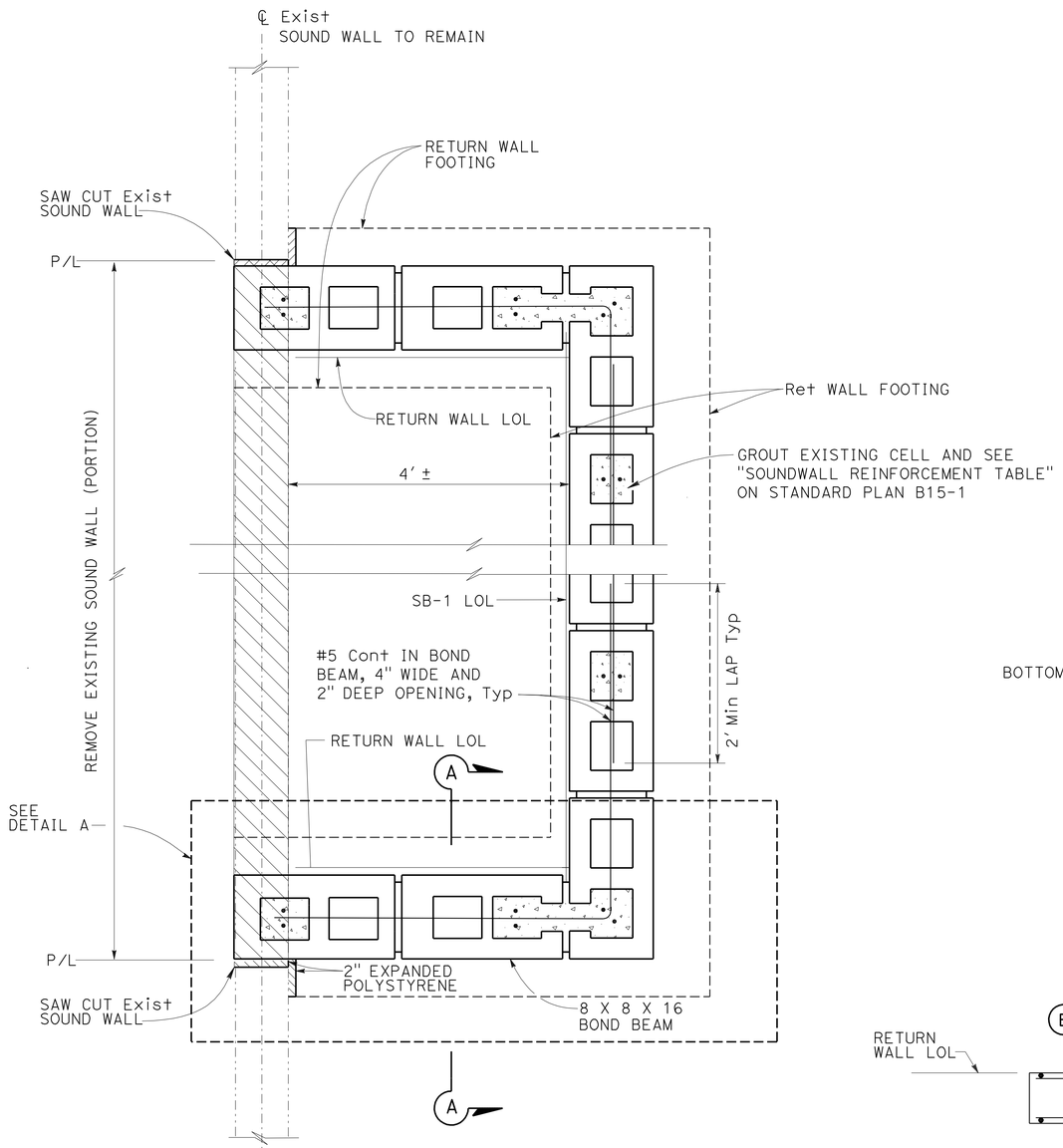

PLAN
SOUND WALL SB-1
CONNECTION TO Exist WALL

NO SCALE

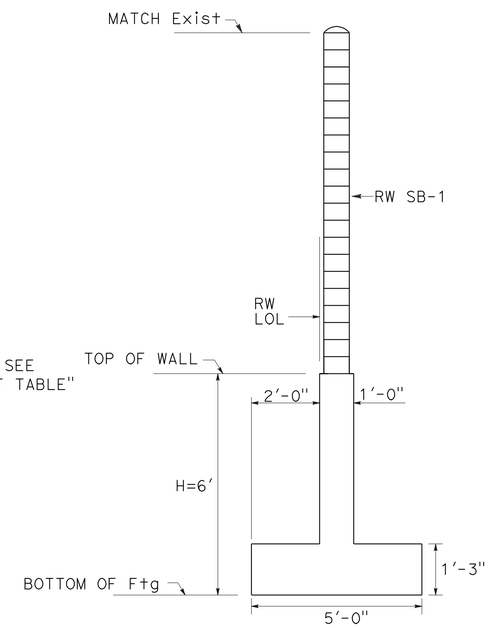

SECTION A-A

RETURN WALL

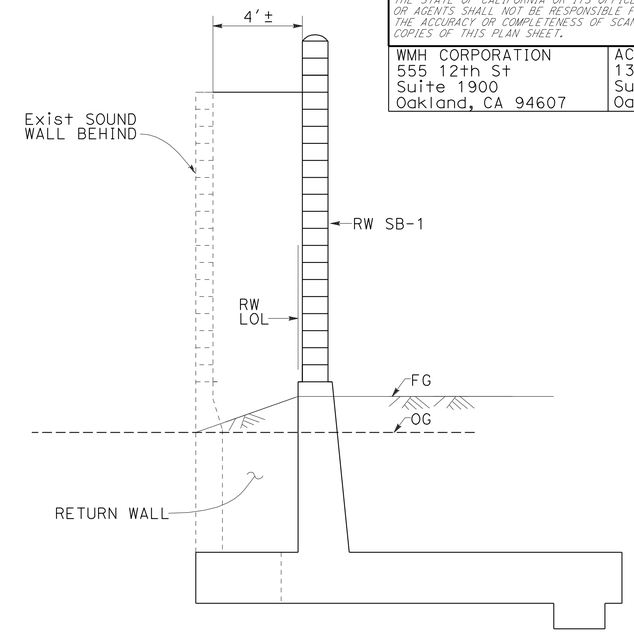

ELEVATION-RETURN WALL

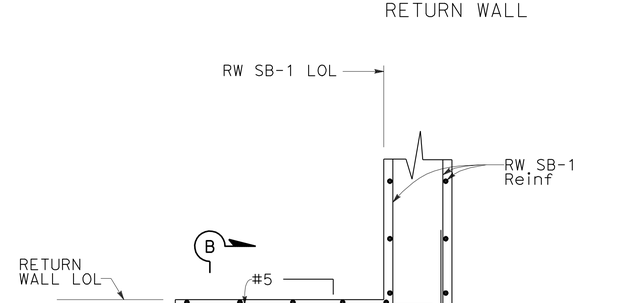

DETAIL 1

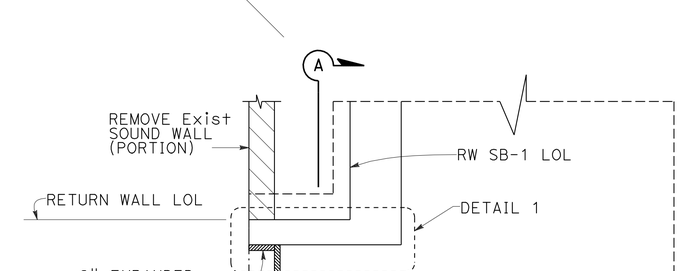

DETAIL A

APPROVED FOR RETAINING WALL WORK ONLY

RETAINING WALL PLAN
RETAINING WALL SB-1
R-30

STATE OF CALIFORNIA - DEPARTMENT OF TRANSPORTATION
Caltrans

CONSULTANT FUNCTIONAL SUPERVISOR: TIMOTHY J. LEE
CALCULATED-DESIGNED BY: BEN RAZEGHI
CHECKED BY: E. ANJORIN
REVISED BY: GKS
DATE REVISED: 12/14/11

LAST REVISION 11-16-11
DATE PLOTTED => 19-APR-2012
TIME PLOTTED => 18:10

X:\880_Marina-Davis\000_CAD\Sheets\0000_Final PSE-ElecCADDSubmittal\Final_Submittal_20111227\880MDRefMerge_20111226\EA04-3g9211_CADD-SUBMITTAL_20111227\43g921qe003.dgn

Dist	COUNTY	ROUTE	POST MILES TOTAL PROJECT	SHEET No.	TOTAL SHEETS
04	Ala	880	22.6/24.0	470	760

B. Razeghi 11-16-11
REGISTERED CIVIL ENGINEER DATE

4-16-12
PLANS APPROVAL DATE

REGISTERED PROFESSIONAL ENGINEER B. RAZEGHI No. C52725 Exp. 12-31-12 CIVIL STATE OF CALIFORNIA

THE STATE OF CALIFORNIA OR ITS OFFICERS OR AGENTS SHALL NOT BE RESPONSIBLE FOR THE ACCURACY OR COMPLETENESS OF SCANNED COPIES OF THIS PLAN SHEET.

WMH CORPORATION
555 12th St
Suite 1900
Oakland, CA 94607

ACTC
1333 Broadway
Suites 220 & 300
Oakland, CA 94612

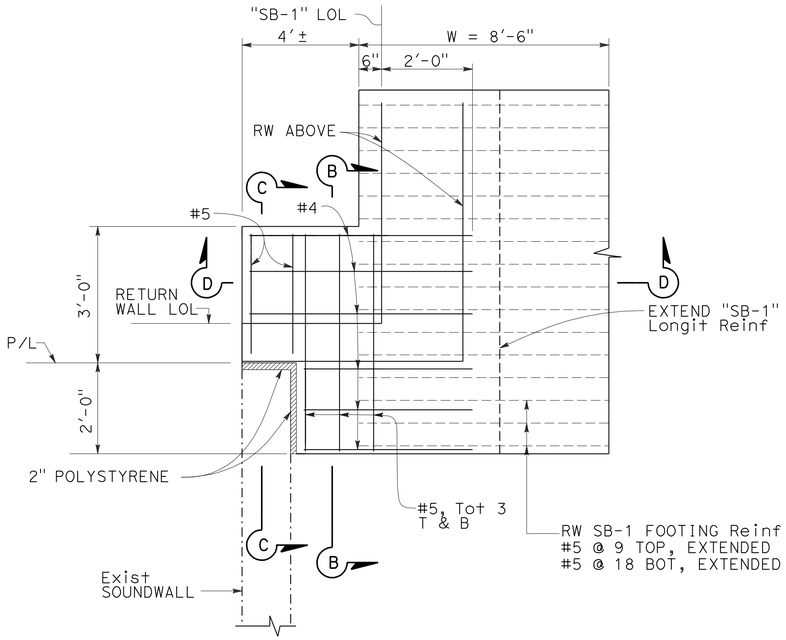

FOOTING DETAIL

RETURN WALL

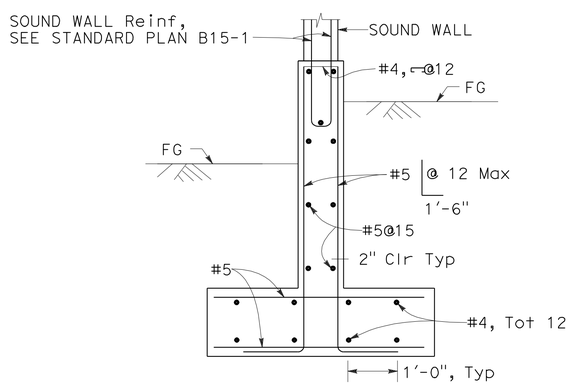

SECTION B-B

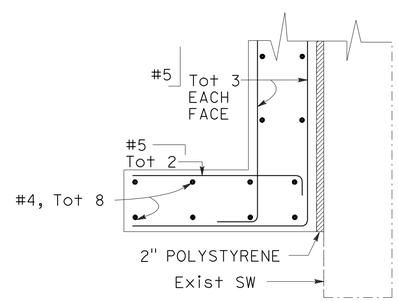

SECTION C-C

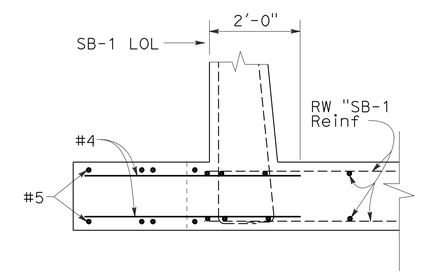

SECTION D-D

APPROVED FOR RETAINING WALL WORK ONLY

RETAINING WALL PLAN
RETAINING WALL SB-1
R-31

STATE OF CALIFORNIA - DEPARTMENT OF TRANSPORTATION
Caltrans

CONSULTANT FUNCTIONAL SUPERVISOR: TIMOTHY J. LEE
CALCULATED-DESIGNED BY: E. ANJORIN
CHECKED BY: BEN RAZEGHI
REVISED BY: GKS
DATE REVISED: 12/14/11

LAST REVISION 11-16-11 | DATE PLOTTED => 25-APR-2012 | TIME PLOTTED => 11:38

X:\880_Marina-Davis\000_CAD\Sheets\0000_Final\PSE-ElecCADDSubmittal\Final_Submittal_20111227\880MDRefMerge_20111226\EA04-309211_CADD-SUBMITTAL_20111227\43g921qe004.dgn

Dist	COUNTY	ROUTE	POST MILES TOTAL PROJECT	SHEET No.	TOTAL SHEETS
04	Ala	880	22.6/24.0	471	760

REGISTERED CIVIL ENGINEER 11-16-11 DATE

4-16-12
PLANS APPROVAL DATE

REGISTERED PROFESSIONAL ENGINEER B. RAZEGHI No. C52725 Exp. 12-31-12 CIVIL STATE OF CALIFORNIA

THE STATE OF CALIFORNIA OR ITS OFFICERS OR AGENTS SHALL NOT BE RESPONSIBLE FOR THE ACCURACY OR COMPLETENESS OF SCANNED COPIES OF THIS PLAN SHEET.

WMH CORPORATION
555 12th St
Suite 1900
Oakland, CA 94607

ACTC
1333 Broadway
Suites 220 & 300
Oakland, CA 94612

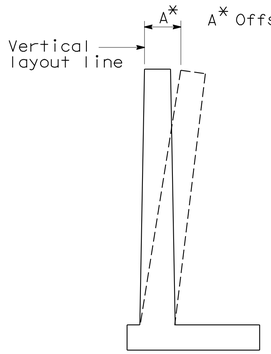

WALL OFFSET
NO SCALE
Values for offsetting forms to be determined by the engineer

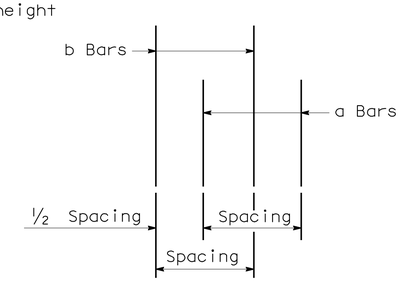

DETAIL A
NO SCALE

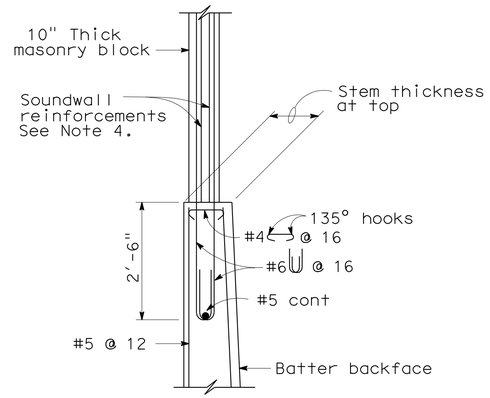

DETAIL B
NO SCALE

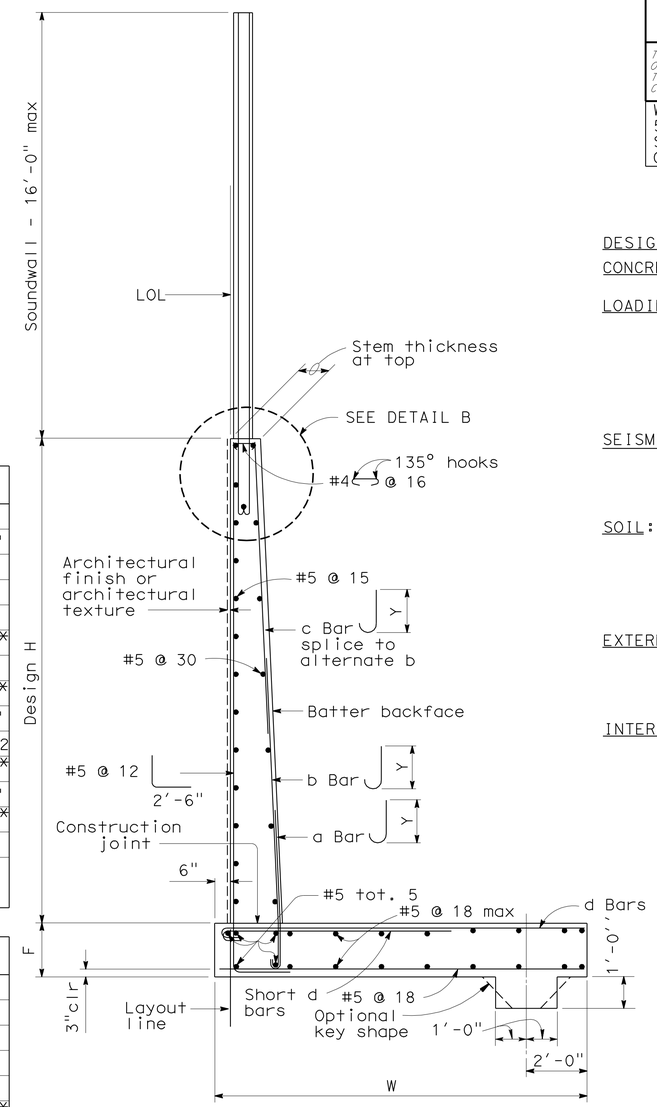

SPREAD FOOTING SECTION
NO SCALE

DESIGN DATA

DESIGN: LOAD FACTOR DESIGN (LFD)

CONCRETE: REINFORCED CONCRETE, fc = 3600 psi
fy = 6000 psi

LOADING CASE:
LEVEL GROUND WITH 240 psf SURCHARGE AND 16' SOUNDWALL.

SEISMIC LOAD = 0.3 DEAD LOAD
WIND LOAD = 30 psf
DEAD LOAD OF SOUNDWALL = 1414 lb/lf
DEAD LOAD OF BARRIER = 372 lb/lf

SEISMIC LOAD: SOIL

K_h = 0.3g
K_v = 0.0
K_{ae} : MONOBE-OKABE METHOD

SOIL: $\emptyset = 34°$ $\gamma = 120$ pcf

EQUIVALENT FLUID PRESSURE:
= 36 pcf MAX. FOR DETERMINATION OF TOE PRESSURE
= 27 pcf MAX. FOR DETERMINATION OF HEEL PRESSURE

EXTERNAL STABILITY:

GROUP 1 :D+E+SC
GROUP 2 :D+E+SC+W
GROUP 3 :D+PYM

INTERNAL STABILITY (LFD):

GROUP A :βD+1.7 E+1.7 SC
GROUP B :βD+1.7 E+1.3 W
GROUP C :
STEM : 1.0 D+1.0E+1.0 EQD+1.0 EQE
FOOTING : D+PYM

WHERE: β = 1.0 OR 1.3 WHICHEVER CONTROLS DESIGN
D = DEAD LOAD
E = LATERAL EARTH PRESSURE
SC = SURCHARGE
W = WIND LOAD
EQD = SEISMIC DEAD LOAD
EQE = SEISMIC LATERAL EARTH PRESSURE
PYM = PROBABLE YIELD MOMENT (1.3* NOMINAL YIELD MOMENT OF STEM)

ALTERNATIVE A : (CONSTANT TOP OF WALL THICKNESS) TABLE OF REINFORCING STEEL DIMENSIONS AND DATA

DESIGN H	6'	8'	10'	12'	14'	16'	18'	20'	22'	24'	26'	28'	30'	32'
W	8'-6"	8'-6"	9'-3"	10'-0"	11'-3"	12'-3"	13'-3"	14'-6"	15'-9"	17'-0"	18'-6"	20'-0"	21'-3"	22'-9"
F SPREAD FTG.	1'-3"	1'-3"	1'-3"	1'-6"	1'-6"	1'-9"	2'-0"	2'-0"	2'-3"	2'-6"	3'-0"	3'-3"	3'-9"	4'-0"
BATTER	0	½:12	½:12	½:12	½:12	½:12	½:12	½:12	½:12	⅝:12	¾:12	⅞:12	1:12	1:12
STEM THICKNESS @ TOP	1'-0"	1'-0"	1'-0"	1'-0"	1'-0"	1'-0"	1'-0"	1'-0"	1'-0"	1'-0"	1'-0"	1'-0"	1'-0"	1'-0"
a BARS				#6@18**	#7@18**	#8@18**	#9@18**	#10@18**	#8 @ 9*	#8 @ 9*	#7 @ 6*	#10@12**	#9 @ 9*	#11@12**
Y				8'-0"	6'-6"	7'-6"	8'-0"	9'-0"	9'-6"	11'-0"	11'-6"	13'-0"	14'-0"	15'-6"
b BARS	#5 @ 12	#5 @ 12	#5 @ 9	#6@18**	#7@18**	#8@18**	#9@18**	#10@18**	#8 @ 9*	#8 @ 9*	#7 @ 6*	#10@12**	#9 @ 9*	#11@12**
Y	CONT	CONT	CONT	CONT	10'-6"	13'-0"	15'-0"	17'-6"	19'-6"	21'-0"	18'-6"	19'-0"	25'-6"	23'-6"
c BARS					#6 @ 18	#6 @ 18	#6 @ 18	#6 @ 18	#6 @ 18	#6 @ 18	#6 @ 12	#7 @ 12	#7 @ 18	#7 @ 12
SHORT d BARS	#5 @ 12	#5 @ 9	#6 @ 9	#7@18**	#8@18**	#8@18**	#9@18**	#10@18**	#8 @ 9*	#8 @ 9*	#7 @ 6*	#10@12*	#9 @ 9*	#11@12**
X	CONT	CONT	CONT	5'-6"	6'-6"	7'-6"	8'-0"	8'-6"	9'-6"	10'-6"	11'-6"	12'-6"	13'-6"	15'-0"
d BARS				#7@18**	#8@18**	#8@18**	#9@18**	#10@18**	#8 @ 9*	#8 @ 9*	#7 @ 6*	#10@12*	#9 @ 9*	#11@12**
X				CONT	CONT	CONT	CONT	CONT	CONT	CONT	CONT	CONT	CONT	CONT
ULTIMATE BEARING CAPACITY REQUIRED k/sf	6.3	7.8	8.8	10.3	11.4	13.2	15	16.2	17.8	19.4	21.1	22.4	24.4	25.8

ALTERNATIVE B : (VARIABLE TOP OF WALL THICKNESS) TABLE OF REINFORCING STEEL DIMENSIONS AND DATA

DESIGN H		8'	10'	12'	14'	16'	18'	20'	22'	24'	26'	28'	30'	32'
W		8'-6"	9'-0"	9'-9"	10'-6"	12'-6"	13'-3"	14'-3"	16'-3"	17'-0"	18'-9"	20'-3"	21'-3"	22'-6"
F SPREAD FTG.		1'-3"	1'-3"	1'-3"	1'-3''	1'-6''	1'-6"	1'-9"	2'-3"	2'-3"	2'-9"	3'-3"	3'-9"	3'-9"
BATTER		0	0	0	0	0	0	0	0	0	¼:12	½:12	½:12	½:12
STEM THICKNESS @ TOP		1'-0"	1'-0"	1'-0"	1'-0"	1'-3"	1'-3"	1'-6"	2'-0"	2'-0"	2'-0"	2'-0"	2'-0"	2'-0"
a BARS				#6@12**	#5 @ 6*	#8@12**	#8 @ 9*	#9@12**	#9@12**	#7 @ 6*	#7 @ 6*	#7 @ 6*	#9 @ 9*	#11@12**
Y				5'-6"	5'-6"	6'-0"	6'-6"	8'-0"	8'-6"	9'-6"	11'-0"	12'-6"	13'-6"	14'-6"
b BARS		#5 @ 9	#6 @ 9	#6@12**	#5 @ 6*	#8@12**	#8 @ 9*	#9@12**	#9@12**	#7 @ 6*	#7 @ 6*	#7 @ 6*	#9 @ 9*	#11@12**
Y		CONT	CONT	CONT	CONT	8'-6"	11'-0"	11'-0"	11'-6"	17'-0"	19'-6"	21'-6"	24'-0"	24'-0"
c BARS						#6 @ 12	#7 @ 18	#7 @ 12	#7 @ 12	#6 @ 12	#6 @ 12	#6 @ 12	#7 @ 18	#7 @ 12
SHORT d BARS		#5 @ 9	#6 @ 9	#7@18**	#5 @ 6*	#8@12**	#8 @ 9*	#9@12**	#9@12**	#7 @ 6*	#9 @ 6*	#9 @ 6*	#9 @ 9*	#8 @ 6*
X		CONT	CONT	6'-0"	5'-6"	7'-0"	8'-6"	9'-0"	10'-0"	11'-0"	12'-0"	13'-0"	14'-0"	15'-0"
d BARS				#7@18**	#5 @ 6*	#9@18**	#8 @ 9*	#9@12**	#9@12**	#7 @ 6*	#9 @ 6*	#9 @ 6*	#9 @ 9*	#8 @ 6*
X				CONT	CONT	CONT	CONT	CONT	CONT	CONT	CONT	CONT	CONT	CONT
ULTIMATE BEARING CAPACITY REQUIRED k/sf		7.8	9	10.3	11.8	12.6	14.3	16.2	17.3	19.1	20.6	22.3	24.5	25.8

CONT = CONTINUOUS
* = a AND b [SHORT d & d] BARS ARE BUNDLED TOGETHER.
** = ALTERNATE a AND b BARS AS SHOWN IN DETAIL A.
ALTERNATE d AND d BARS.

GENERAL NOTES

1. FOR SOUNDWALL AND RETAINING WALL ARCHITECTURAL FINISH OR TEXTURE SEE SHEETS R-6 AND R-34.
2. FOR DETAILS NOT SHOWN AND DRAINAGE NOTES, SEE B3-8.
3. FOOTING COVER, 1'-6" MINIMUM.
4. FOR SOUNDWALL AND REINFORCEMENTS SEE B15-1.

RETAINING WALL SB-1
RETAINING WALL TYPE 5SW

R-32

STATE OF CALIFORNIA - DEPARTMENT OF TRANSPORTATION
Caltrans
CONSULTANT FUNCTIONAL SUPERVISOR: TIMOTHY J. LEE
CALCULATED-DESIGNED BY: E. ANJORIN
CHECKED BY: BEN RAZEGHI
REVISED BY: GKS
DATE REVISED: 12/14/11

X:\880_Marina-Davis\000_CAD\Sheets\0000_Final\PSE-E_elecADDSubmittal\Final_Submittal_20111227\880MRefMerge_20111226\EA04-3g9211_CADD-SUBMITTAL_20111227\43a921qe005.dgn

LAST REVISION 11-16-11 | DATE PLOTTED => 25-APR-2012 | TIME PLOTTED => 11:39

Dist	COUNTY	ROUTE	POST MILES TOTAL PROJECT	SHEET No.	TOTAL SHEETS
04	Ala	880	22.6/24.0	472	760

REGISTERED CIVIL ENGINEER 11-16-11 DATE

4-16-12
PLANS APPROVAL DATE

REGISTERED PROFESSIONAL ENGINEER B. RAZEGHI No. C52725 Exp. 12-31-12 CIVIL STATE OF CALIFORNIA

THE STATE OF CALIFORNIA OR ITS OFFICERS OR AGENTS SHALL NOT BE RESPONSIBLE FOR THE ACCURACY OR COMPLETENESS OF SCANNED COPIES OF THIS PLAN SHEET.

WMH CORPORATION
555 12th St
Suite 1900
Oakland, CA 94607

ACTC
1333 Broadway
Suites 220 & 300
Oakland, CA 94612

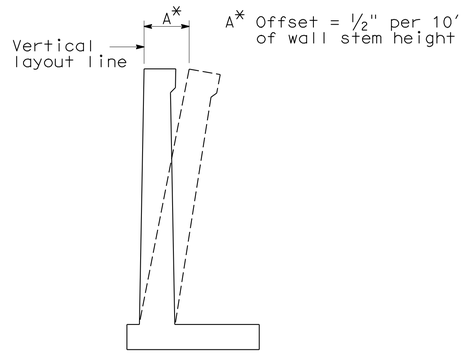

WALL OFFSET

NO SCALE

Values for offsetting forms to be determined by the engineer

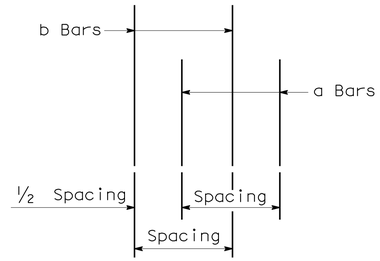

DETAIL A

NO SCALE

TABLE 1 : TABLE OF REINFORCING STEEL DIMENSION AND DATA

STEM WITH HAUNCH

DESIGN H	6′	8′	10′	12′	14′	16′	18′	20′	22′	24′	26′	28′	30′	32′
W	8′-6"	8′-6"	9′-3"	10′-0"	11′-3"	12′-3"	13′-3"	14′-6"	15′-9"	17′-0"	18′-6"	20′-0"	21′-3"	22′-9"
F SPREAD FTG.	1′-3"	1′-3"	1′-3"	1′-6"	1′-6"	1′-9"	2′-0"	2′-0"	2′-3"	2′-6"	3′-0"	3′-3"	3′-9"	4′-0"
BATTER	0	½:12	½:12	½:12	½:12	½:12	½:12	½:12	½:12	⅝:12	¾:12	⅞:12	1:12	1:12
STEM THICKNESS @ HAUNCH	1′-0"	1′-0"	1′-0"	1′-0"	1′-0"	1′-0"	1′-0"	1′-0"	1′-0"	1′-0"	1′-0"	1′-0"	1′-0"	1′-0"
a BARS				#6@18**	#7@18**	#8@18**	#9@18**	#10@18**	#8 @ 9*	#8 @ 9*	#7 @ 6*	#10@12**	#9 @ 9*	#11@12**
Y				8′-0"	6′-6"	7′-6"	8′-0"	9′-0"	9′-6"	11′-0"	11′-6"	13′-0"	14′-0"	15′-6"
b BARS	#5 @ 12	#5 @ 12	#5 @ 9	#6@18**	#7@18**	#8@18**	#9@18**	#10@18**	#8 @ 9*	#8 @ 9*	#7 @ 6*	#10@12**	#9 @ 9*	#11@12**
Y	CONT	CONT	CONT	CONT	10′-6"	13′-0"	15′-0"	17′-6"	19′-6"	21′-0"	18′-6"	19′-0"	25′-6"	23′-6"
c BARS					#6 @ 18	#6 @ 18	#6 @ 18	#6 @ 18	#6 @ 18	#6 @ 18	#6 @ 12	#7 @ 12	#7 @ 18	#7 @ 12
SHORT d BARS	#5 @ 12	#5 @ 9	#6 @ 9	#7@18**	#8@18**	#8@18**	#9@18**	#10@18**	#8 @ 9*	#8 @ 9*	#7 @ 6*	#10@12*	#9 @ 9*	#11@12**
X	CONT	CONT	CONT	5′-6"	6′-6"	7′-6"	8′-0"	8′-6"	9′-6"	10′-6"	11′-6"	12′-6"	13′-6"	15′-0"
d BARS				#7@18**	#8@18**	#8@18**	#9@18**	#10@18**	#8 @ 9*	#8 @ 9*	#7 @ 6*	#10@12*	#9 @ 9*	#11@12**
X				CONT	CONT	CONT	CONT	CONT	CONT	CONT	CONT	CONT	CONT	CONT
ULTIMATE BEARING CAPACITY REQUIRED k/sf	6.3	7.8	8.8	10.3	11.4	13.2	15	16.2	17.8	19.4	21.1	22.4	24.4	25.8

TABLE 2 : TABLE OF REINFORCING STEEL DIMENSION AND DATA

	STEM WITH HAUNCH							STEM WITHOUT HAUNCH						
DESIGN H	6′	8′	10′	12′	14′	16′	18′	20′	22′	24′	26′	28′	30′	32′
W		8′-6"	9′-0"	9′-9"	10′-6"	12′-6"	13′-3"	14′-3"	16′-3"	17′-0"	18′-9"	20′-3"	21′-3"	22′-6"
F SPREAD FTG.		1′-3"	1′-3"	1′-3"	1′-3"	1′-6"	1′-6"	1′-9"	2′-3"	2′-3"	2′-9"	3′-3"	3′-9"	3′-9"
BATTER		0	0	0	0	0	0	0	0	0	¼:12	½:12	½:12	½:12
STEM THICKNESS @ HAUNCH		1′-0"	1′-0"	1′-0"	1′-0"	1′-3"	1′-3"							
STEM THICKN @ TOP								1′-6"	2′-0"	2′-0"	2′-0"	2′-0"	2′-0"	2′-0"
a BARS				#6@12**	#5 @ 6*	#8@12**	#8 @ 9*	#9@12**	#9@12**	#7 @ 6*	#7 @ 6*	#7 @ 6*	#9 @ 9*	#11@12**
Y				5′-6"	5′-6"	6′-0"	6′-6"	8′-0"	8′-6"	9′-6"	11′-0"	12′-6"	13′-6"	14′-6"
b BARS		#5 @ 9	#6 @ 9	#6@12**	#5 @ 6*	#8@12**	#8 @ 9*	#9@12**	#9@12**	#7 @ 6*	#7 @ 6*	#7 @ 6*	#9 @ 9*	#11@12**
Y		CONT	CONT	CONT	CONT	8′-6"	11′-0"	11′-0"	11′-6"	17′-0"	19′-6"	21′-6"	24′-0"	24′-0"
c BARS						#6 @ 12	#7 @ 18	#7 @ 12	#7 @ 12	#6 @ 12	#6 @ 12	#6 @ 12	#7 @ 18	#7 @ 12
SHORT d BARS		#5 @ 9	#6 @ 9	#7@18**	#5 @ 6*	#8@12**	#8 @ 9*	#9@12**	#9@12**	#7 @ 6*	#9 @ 6*	#9 @ 6*	#9 @ 9*	#8 @ 6*
X		CONT	CONT	6′-0"	5′-6"	7′-0"	8′-6"	9′-0"	10′-0"	11′-0"	12′-0"	13′-0"	14′-0"	15′-0"
d BARS				#7@18**	#5 @ 6*	#9@18**	#8 @ 9*	#9@12**	#9@12**	#7 @ 6*	#9 @ 6*	#9 @ 6*	#9 @ 9*	#8 @ 6*
X				CONT	CONT	CONT	CONT	CONT	CONT	CONT	CONT	CONT	CONT	CONT
ULTIMATE BEARING CAPACITY REQUIRED k/sf		7.8	9	10.3	11.8	12.6	14.3	16.2	17.3	19.1	20.6	22.3	24.5	25.8

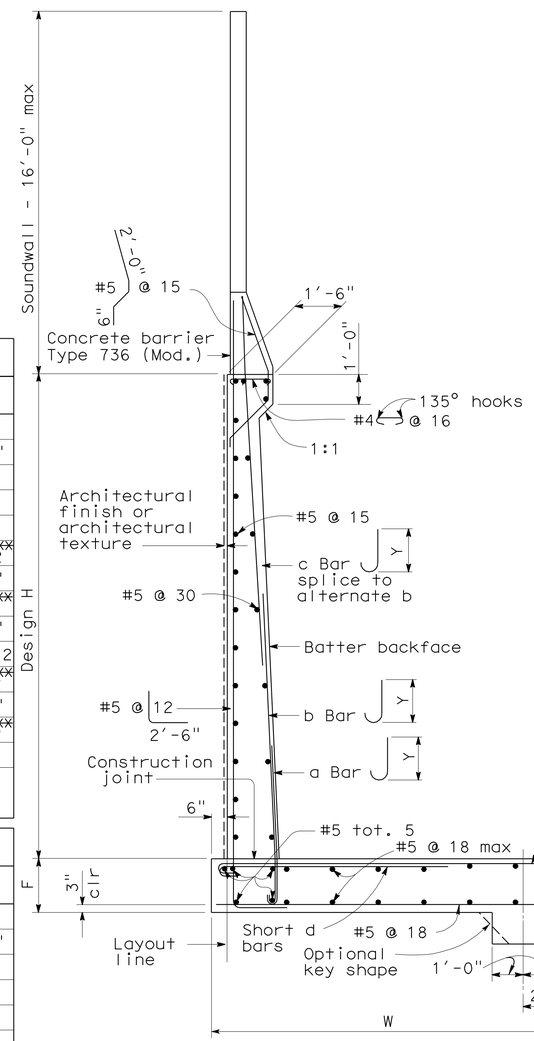

SPREAD FOOTING SECTION

NO SCALE

CONT = CONTINUOUS
* = a AND b [SHORT d & d] BARS ARE BUNDLED TOGETHER.
** = ALTERNATE a AND b BARS AS SHOWN IN DETAIL A.
= ALTERNATE SHORT d AND d BARS.

DESIGN DATA

DESIGN: LOAD FACTOR DESIGN (LFD)

CONCRETE: REINFORCED CONCRETE, fc = 3600 psi
fy = 60000 psi

LOADING CASE:

LEVEL GROUND WITH 240 psf SURCHARGE
AND 16′ SOUNDWALL.
SEISMIC LOAD = 0.3 DEAD LOAD
WIND LOAD = 30 psf
DEAD LOAD OF SOUNDWALL = 1414 lb/lf
DEAD LOAD OF BARRIER = 372 lb/lf

SEISMIC LOAD: SOIL

K_h = 0.3g
K_v = 0.0
K_{ae} : MONOBE-OKABE METHOD

SOIL: ϕ = 34° γ = 120 pcf

EQUIVALENT FLUID PRESSURE:
= 36 pcf MAX. FOR DETERMINATION OF TOE PRESSURE
= 27 pcf MAX. FOR DETERMINATION OF HEEL PRESSURE

EXTERNAL STABILITY:

GROUP 1 : D+E = SC
GROUP 2 : D+E+SC+W
GROUP 3 : D = PYM

INTERNAL STABILITY (LFD):

GROUP A : βD+1.7E+1.7SC
GROUP B : βD+1.7E+1.7SC+W
GROUP C :
STEM : 1.0D+1.0E+1.0EQD+1.0EQE
FOOTING : D+PYM

WHERE : β = 1.0 OR 1.3 WHICHEVER CONTROLS DESIGN
D = DEAD LOAD
E = LATERAL EARTH PRESSURE
SC = SURCHARGE
W = WIND LOAD
EQD = SEISMIC DEAD LOAD
EQE = SEISMIC LATERAL EARTH PRESSURE
PYM = PROBABLE YIELD MOMENT (1.3* NOMINAL YIELD MOMENT OF STEM)

GENERAL NOTES

1. FOR SOUNDWALL AND RETAINING WALL ARCHITECTURAL FINISH OR TEXTURE SEE SHEETS R-6 AND R-34.
2. FOR DETAILS NOT SHOWN AND DRAINAGE NOTES SEE B3-8.
3. FOOTING COVER, 1′-6" MINIMUM.
4. FOR SOUNDWALL REINFORCEMENTS, SEE B15-1.

RETAINING WALL SB-1

RETAINING WALL TYPE 5SWB

R-33

GKS	12/14/11	E. ANJORIN	BEN RAZEGHI	TIMOTHY J. LEE
REVISED BY	DATE REVISED	CALCULATED-DESIGNED BY	CHECKED BY	CONSULTANT FUNCTIONAL SUPERVISOR

STATE OF CALIFORNIA - DEPARTMENT OF TRANSPORTATION

Caltrans

X:\880_Marina-Davis\000_CAD\Sheets\0000_Final PSE-ElecCADSubmittal\Final_Submittal_20111227\880MDRefMerge_20111226\EA04-3g921_CADD-SUBMITTAL_20111227\43g921qe006.dgn

LAST REVISION 11-16-11 | DATE PLOTTED => 25-APR-2012 | TIME PLOTTED => 11:39

Dist	COUNTY	ROUTE	POST MILES TOTAL PROJECT	SHEET No.	TOTAL SHEETS
04	Ala	880	22.6/24.0	473	760

B. Razeghi 11-16-11
REGISTERED CIVIL ENGINEER DATE

4-16-12
PLANS APPROVAL DATE

REGISTERED PROFESSIONAL ENGINEER
B. RAZEGHI
No. C52725
Exp. 12-31-12
CIVIL
STATE OF CALIFORNIA

THE STATE OF CALIFORNIA OR ITS OFFICERS OR AGENTS SHALL NOT BE RESPONSIBLE FOR THE ACCURACY OR COMPLETENESS OF SCANNED COPIES OF THIS PLAN SHEET.

WMH CORPORATION
555 12th St
Suite 1900
Oakland, CA 94607

ACTC
1333 Broadway
Suites 220 & 300
Oakland, CA 94612

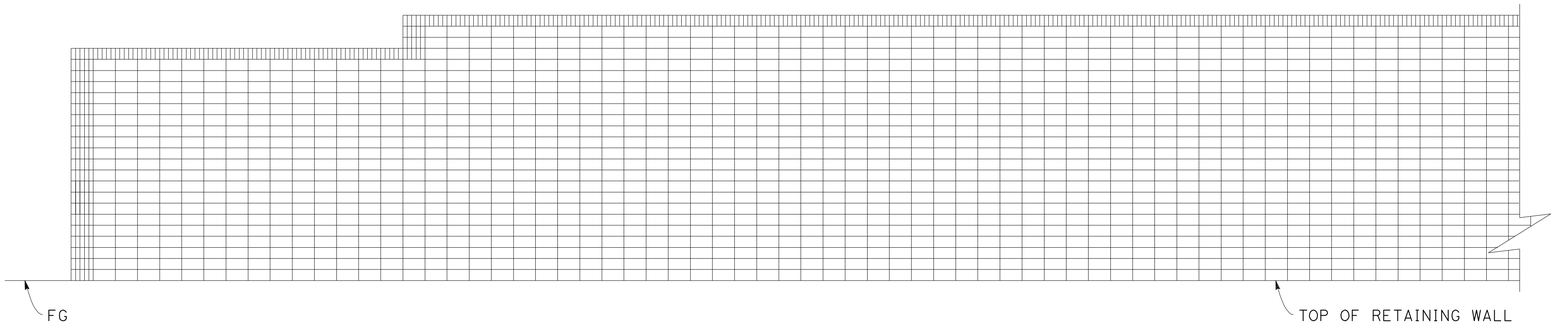

SOUNDWALL w/ RETAINING WALL TYPE 5SW

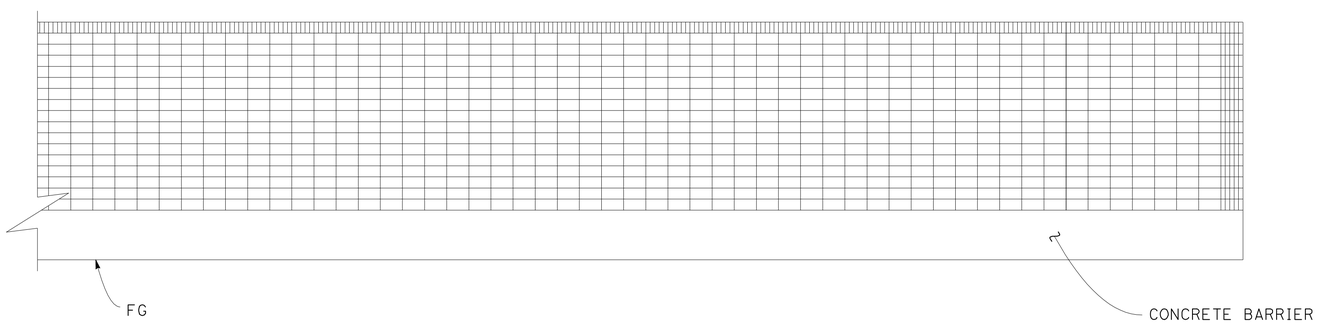

SOUNDWALL w/ RETAINING WALL TYPE 5SWB

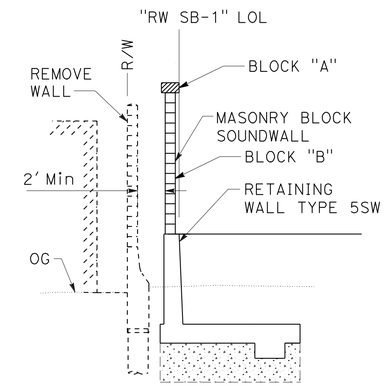

TYPICAL SECTION

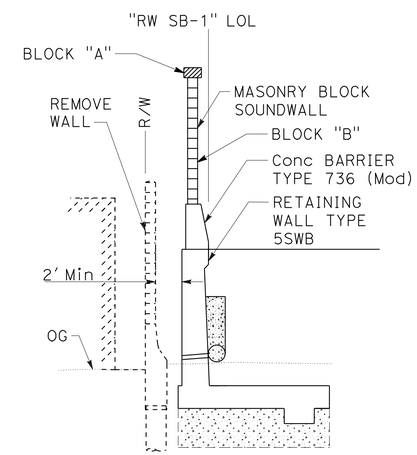

TYPICAL SECTION

LEGEND:

BLOCK "A"

BLOCK "B"

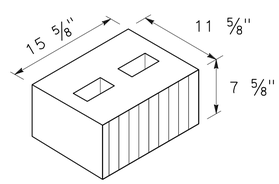

BLOCK "A"

BASALITE
COLOR: D619 OR EQUAL
SPLIT FACE FINISH
ON BOTH SIDES

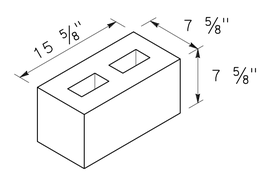

BLOCK "B"

BASALITE
COLOR: D619 OR EQUAL
SPLIT FACE FINISH
ON BOTH SIDES

AESTHETIC TREATMENT

SOUND WALL PLAN

NO SCALE

R-34

APPROVED FOR SOUND WALL AESTHETICS WORK ONLY

REVISED BY	DATE REVISED
EIA	11/16/11
BG	6/3/11
BG	2/2/10

HEATHER CHARLES — CALCULATED-DESIGNED BY
SEAN A. CHARLES — CHECKED BY
TIMOTHY J. LEE — CONSULTANT FUNCTIONAL SUPERVISOR

STATE OF CALIFORNIA - DEPARTMENT OF TRANSPORTATION
Caltrans

X:\880_Martinez-Davis\000_CAD\Sheets\0000_Final\PSE-ElecCADSubmittal\Final_Submittal_20111227\880MDRefMerge_20111226\EA04-3g9211_CADD-SUBMITTAL_20111227\43a921qe007.dgn

LAST REVISION 11-16-11 | DATE PLOTTED => 20-APR-2012 | TIME PLOTTED => 08:36

REFERENCE: CALTRANS SOIL & ROCK LOGGING, CLASSIFICATION, AND PRESENTATION MANUAL (2010)

DIST	COUNTY	ROUTE	POST MILES TOTAL PROJECT	SHEET No	TOTAL SHEETS
04	Ala	880	22.6/24.0	474	760

GEOTECHNICAL PROFESSIONAL — DATE 10/26/11

4-16-12
PLANS APPROVAL DATE

REGISTERED PROFESSIONAL ENGINEER — GARY PARIKH — No. G.E. 666 — Exp. 12/31/13 — GEOTECHNICAL — STATE OF CALIFORNIA

THE HNTB OR ITS OFFICERS OR AGENTS SHALL NOT BE RESPONSIBLE FOR THE ACCURACY OR COMPLETENESS OF SCANNED COPIES OF THIS PLAN SHEET.

ACTC
1333 BROADWAY, SUITES 220 & 300
OAKLAND, CA 94612

PARIKH CONSULTANTS, INC.
2360 QUME DRIVE, SUITE A
SAN JOSE, CA 95131

CEMENTATION

Description	Criteria
Weak	Crumbles or breaks with handling or little finger pressure.
Moderate	Crumbles or breaks with considerable finger pressure.
Strong	Will not crumble or break with finger pressure.

BOREHOLE IDENTIFICATION

Symbol	Hole Type	Description
Size	A	Auger Boring (hollow or solid stem bucket)
Size	R	Rotary drilled boring (conventional)
	RW	Rotary drilled with self-casing wire-line
	RC	Rotary core with continuously-sampled, self-casing wire-line
	P	Rotary percussion boring (air)
Size	R	Rotary drilled diamond core
Size	HD	Hand driven (1-inch soil tube)
	HA	Hand Auger
●	D	Dynamic Cone Penetration Boring
▲	CPT	Cone Penetration Test (ASTM D 5778)
⬚	O	Other (note on LOTB)

Note: Size in inches.

CONSISTENCY OF COHESIVE SOILS

Description	Shear Strength (tsf)	Pocket Penetrometer Measurement, PP, (tsf)	Torvane Measurement, TV, (tsf)	Vane Shear Measurement, VS, (tsf)
Very Soft	Less than 0.12	Less than 0.25	Less than 0.12	Less than 0.12
Soft	0.12 - 0.25	0.25 - 0.5	0.12 - 0.25	0.12 - 0.25
Medium Stiff	0.25 - 0.5	0.5 - 1	0.25 - 0.5	0.25 - 0.5
Stiff	0.5 - 1	1 - 2	0.5 - 1	0.5 - 1
Very Stiff	1 - 2	2 - 4	1 - 2	1 - 2
Hard	Greater than 2	Greater than 4	Greater than 2	Greater than 2

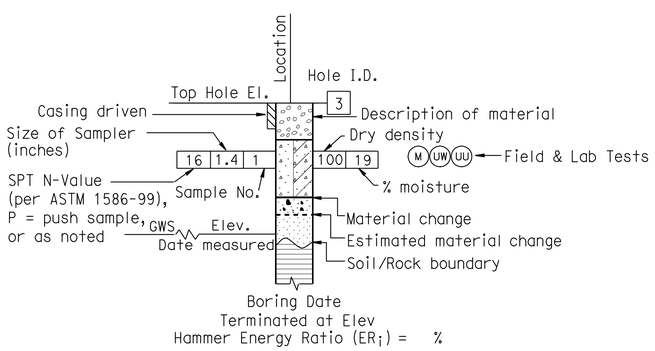

ROTARY BORING

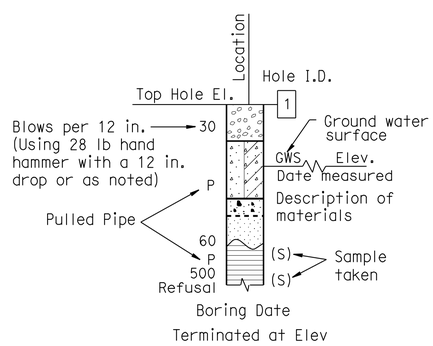

HAND BORING

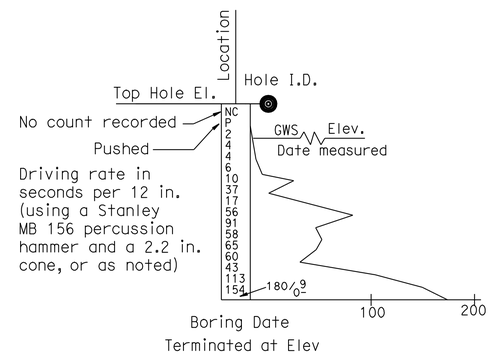

DYNAMIC CONE PENETRATION BORING

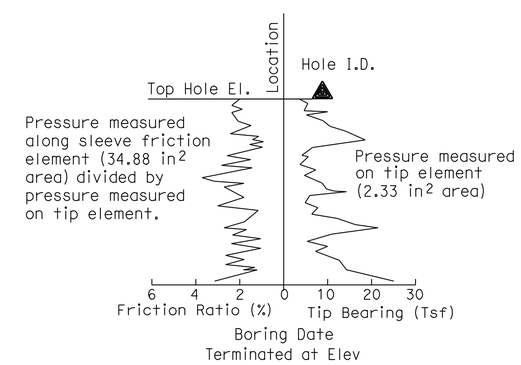

CONE PENETRATION TEST (CPT) BORING

SOIL LEGEND 1 OF 2

DESIGN OVERSIGHT	DRAWN BY	L. Tran	L. Bhangoo, G. Tripathi — FIELD INVESTIGATION BY:
SIGN OFF DATE	CHECKED BY	D. Wang	DATE: June 2008

PREPARED FOR THE STATE OF CALIFORNIA DEPARTMENT OF TRANSPORTATION

David Wang — PROJECT ENGINEER

BRIDGE NO. — POST MILES 22.6/24.0

RETAINING WALL NO. SB-1 R-35
LOG OF TEST BORINGS

GS GEOTECHNICAL LOG OF TEST BORINGS SHEET (ENGLISH) (REV. 7/16/10)

ORIGINAL SCALE IN INCHES FOR REDUCED PLANS 0 1 2 3

CU: 04248
EA: 3A9211

DISREGARD PRINTS BEARING EARLIER REVISION DATES — REVISION DATES 9/22/09 4/30/11 10/24/11 — SHEET — OF

FILE => 43a921qe008.dgn

USERNAME => s109858 DATE PLOTTED => 20-APR-2012 TIME PLOTTED => 08:36

REFERENCE: CALTRANS SOIL & ROCK LOGGING, CLASSIFICATION, AND PRESENTATION MANUAL (2010)

GROUP SYMBOLS AND NAMES

Graphic/Symbol	Group Names	Graphic/Symbol	Group Names
GW	Well-graded GRAVEL Well-graded GRAVEL with SAND	CL	Lean CLAY Lean CLAY with SAND Lean CLAY with GRAVEL SANDY lean CLAY SANDY lean CLAY with GRAVEL GRAVELLY lean CLAY GRAVELLY lean CLAY with SAND
GP	Poorly-graded GRAVEL Poorly-graded GRAVEL with SAND		
GW-GM	Well-graded GRAVEL with SILT Well-graded GRAVEL with SILT and SAND	CL-ML	SILTY CLAY SILTY CLAY with SAND SILTY CLAY with GRAVEL SANDY SILTY CLAY SANDY SILTY CLAY with GRAVEL GRAVELLY SILTY CLAY GRAVELLY SILTY CLAY with SAND
GW-GC	Well-graded GRAVEL with CLAY (or SILTY CLAY) Well-graded GRAVEL with CLAY and SAND (or SILTY CLAY and SAND)		
GP-GM	Poorly-graded GRAVEL with SILT Poorly-graded GRAVEL with SILT and SAND	ML	SILT SILT with SAND SILT with GRAVEL SANDY SILT SANDY SILT with GRAVEL GRAVELLY SILT GRAVELLY SILT with SAND
GP-GC	Poorly-graded GRAVEL with CLAY (or SILTY CLAY) Poorly-graded GRAVEL with CLAY and SAND (or SILTY CLAY and SAND)		
GM	SILTY GRAVEL SILTY GRAVEL with SAND	OL	ORGANIC lean CLAY ORGANIC lean CLAY with SAND ORGANIC lean CLAY with GRAVEL SANDY ORGANIC lean CLAY SANDY ORGANIC lean CLAY with GRAVEL GRAVELLY ORGANIC lean CLAY GRAVELLY ORGANIC lean CLAY with SAND
GC	CLAYEY GRAVEL CLAYEY GRAVEL with SAND		
GC-GM	SILTY, CLAYEY GRAVEL SILTY, CLAYEY GRAVEL with SAND	OL	ORGANIC SILT ORGANIC SILT with SAND ORGANIC SILT with GRAVEL SANDY ORGANIC SILT SANDY ORGANIC SILT with GRAVEL GRAVELLY ORGANIC SILT GRAVELLY ORGANIC SILT with SAND
SW	Well-graded SAND Well-graded SAND with GRAVEL		
SP	Poorly-graded SAND Poorly-graded SAND with GRAVEL	CH	Fat CLAY Fat CLAY with SAND Fat CLAY with GRAVEL SANDY fat CLAY SANDY fat CLAY with GRAVEL GRAVELLY fat CLAY GRAVELLY fat CLAY with SAND
SW-SM	Well-graded SAND with SILT Well-graded SAND with SILT and GRAVEL		
SW-SC	Well-graded SAND with CLAY (or SILTY CLAY) Well-graded SAND with CLAY and GRAVEL (or SILTY CLAY and GRAVEL)	MH	Elastic SILT Elastic SILT with SAND Elastic SILT with GRAVEL SANDY elastic SILT SANDY elastic SILT with GRAVEL GRAVELLY elastic SILT GRAVELLY elastic SILT with SAND
SP-SM	Poorly-graded SAND with SILT Poorly-graded SAND with SILT and GRAVEL		
SP-SC	Poorly-graded SAND with CLAY (or SILTY CLAY) Poorly-graded SAND with CLAY and GRAVEL (or SILTY CLAY and GRAVEL)	OH	ORGANIC fat CLAY ORGANIC fat CLAY with SAND ORGANIC fat CLAY with GRAVEL SANDY ORGANIC fat CLAY SANDY ORGANIC fat CLAY with GRAVEL GRAVELLY ORGANIC fat CLAY GRAVELLY ORGANIC fat CLAY with SAND
SM	SILTY SAND SILTY SAND with GRAVEL		
SC	CLAYEY SAND CLAYEY SAND with GRAVEL	OH	ORGANIC elastic SILT ORGANIC elastic SILT with SAND ORGANIC elastic SILT with GRAVEL SANDY ORGANIC elastic SILT SANDY ORGANIC elastic SILT with GRAVEL GRAVELLY ORGANIC elastic SILT GRAVELLY ORGANIC elastic SILT with SAND
SC-SM	SILTY, CLAYEY SAND SILTY, CLAYEY SAND with GRAVEL		
PT	PEAT	OL/OH	ORGANIC SOIL ORGANIC SOIL with SAND ORGANIC SOIL with GRAVEL SANDY ORGANIC SOIL SANDY ORGANIC SOIL with GRAVEL GRAVELLY ORGANIC SOIL GRAVELLY ORGANIC SOIL with SAND
	COBBLES COBBLES and BOULDERS BOULDERS		

FIELD AND LABORATORY TESTING

- (C) Consolidation (ASTM D 2435)
- (CL) Collapse Potential (ASTM D 5333)
- (CP) Compaction Curve (CTM 216)
- (CR) Corrosivity Testing (CTM 643, CTM 422, CTM 417)
- (CU) Consolidated Undrained Triaxial (ASTM D 4767)
- (DS) Direct Shear (ASTM D 3080)
- (EI) Expansion Index (ASTM D 4829)
- (M) Moisture Content (ASTM D 2216)
- (OC) Organic Content-% (ASTM D 2974)
- (P) Permeability (CTM 220)
- (PA) Particle Size Analysis (ASTM D 422)
- (PI) Plasticity Index (AASHTO T 90) Liquid Limit (AASHTO T 89)
- (PL) Point Load Index (ASTM D 5731)
- (PM) Pressure Meter
- (R) R-Value (CTM 301)
- (SE) Sand Equivalent (CTM 217)
- (SG) Specific Gravity (AASHTO T 100)
- (SL) Shrinkage Limit (ASTM D 427)
- (SW) Swell Potential (ASTM D 4546)
- (UC) Unconfined Compression-Soil (ASTM D 2166) Unconfined Compression-Rock (ASTM D 2938)
- (UU) Unconsolidated Undrained Triaxial (ASTM D 2850)
- (UW) Unit Weight (ASTM D 4767)

DIST	COUNTY	ROUTE	POST MILES TOTAL PROJECT	SHEET No	TOTAL SHEETS
04	Ala	880	22.6/24.0	475	760

GEOTECHNICAL PROFESSIONAL — DATE 10/26/11

4-16-12
PLANS APPROVAL DATE

REGISTERED PROFESSIONAL ENGINEER — GARY PARIKH — No. G.E. 666 — Exp. 12/31/13 — GEOTECHNICAL — STATE OF CALIFORNIA

THE HNTB OR ITS OFFICERS OR AGENTS SHALL NOT BE RESPONSIBLE FOR THE ACCURACY OR COMPLETENESS OF SCANNED COPIES OF THIS PLAN SHEET.

ACTC
1333 BROADWAY, SUITES 220 & 300
OAKLAND, CA 94612

PARIKH CONSULTANTS, INC.
2360 QUME DRIVE, SUITE A
SAN JOSE, CA 95131

APPARENT DENSITY OF COHESIONLESS SOILS

Description	SPT N_{60} (Blows / 12 in.)
Very Loose	0 - 5
Loose	5 - 10
Medium Dense	10 - 30
Dense	30 - 50
Very Dense	Greater than 50

MOISTURE

Description	Criteria
Dry	No discernable moisture
Moist	Moisture present, but no free water
Wet	Visible free water

PERCENT OR PROPORTION OF SOILS

Description	Criteria
Trace	Particles are present but estimated to be less than 5%
Few	5% - 10%
Little	15% - 25%
Some	30% - 45%
Mostly	50% - 100%

PARTICLE SIZE

Description		Size (in.)
Boulder		Greater than 12
Cobble		3 - 12
Gravel	Coarse	3/4 - 3
	Fine	1/5 - 3/4
Sand	Coarse	1/16 - 1/5
	Medium	1/64 - 1/16
	Fine	1/300 - 1/64
Silt and Clay		Less than 1/300

SOIL LEGEND 2 OF 2

DESIGN OVERSIGHT
SIGN OFF DATE

DRAWN BY L. Tran
CHECKED BY D. Wang

L. Bhangoo, G. Tripathi
FIELD INVESTIGATION BY:
DATE: June 2008

PREPARED FOR THE STATE OF CALIFORNIA DEPARTMENT OF TRANSPORTATION

David Wang
PROJECT ENGINEER

BRIDGE NO.
POST MILES 22.6/24.0

RETAINING WALL NO. 1 R-36
LOG OF TEST BORINGS

GS GEOTECHNICAL LOG OF TEST BORINGS SHEET (ENGLISH) (REV. 7/16/10)

ORIGINAL SCALE IN INCHES FOR REDUCED PLANS 0 1 2 3

CU: 04248
EA: 3A9211

DISREGARD PRINTS BEARING EARLIER REVISION DATES

REVISION DATES — SHEET — OF

FILE => 43a921qe009.dgn

USERNAME => s109858 DATE PLOTTED => 20-APR-2012 TIME PLOTTED => 08:36

DIST	COUNTY	ROUTE	POST MILES TOTAL PROJECT	SHEET No	TOTAL SHEETS
04	Ala	880	22.6/24.0	476	760

GEOTECHNICAL PROFESSIONAL — DATE 10/26/11

4-16-12
PLANS APPROVAL DATE

REGISTERED PROFESSIONAL ENGINEER — GARY PARIKH — No. G.E. 666 — Exp. 12/31/13 — GEOTECHNICAL — STATE OF CALIFORNIA

THE HNTB OR ITS OFFICERS OR AGENTS SHALL NOT BE RESPONSIBLE FOR THE ACCURACY OR COMPLETENESS OF SCANNED COPIES OF THIS PLAN SHEET.

ACTC
1333 BROADWAY, SUITES 220 & 300
OAKLAND, CA 94612

PARIKH CONSULTANTS, INC.
2360 QUME DRIVE, SUITE A
SAN JOSE, CA 95131

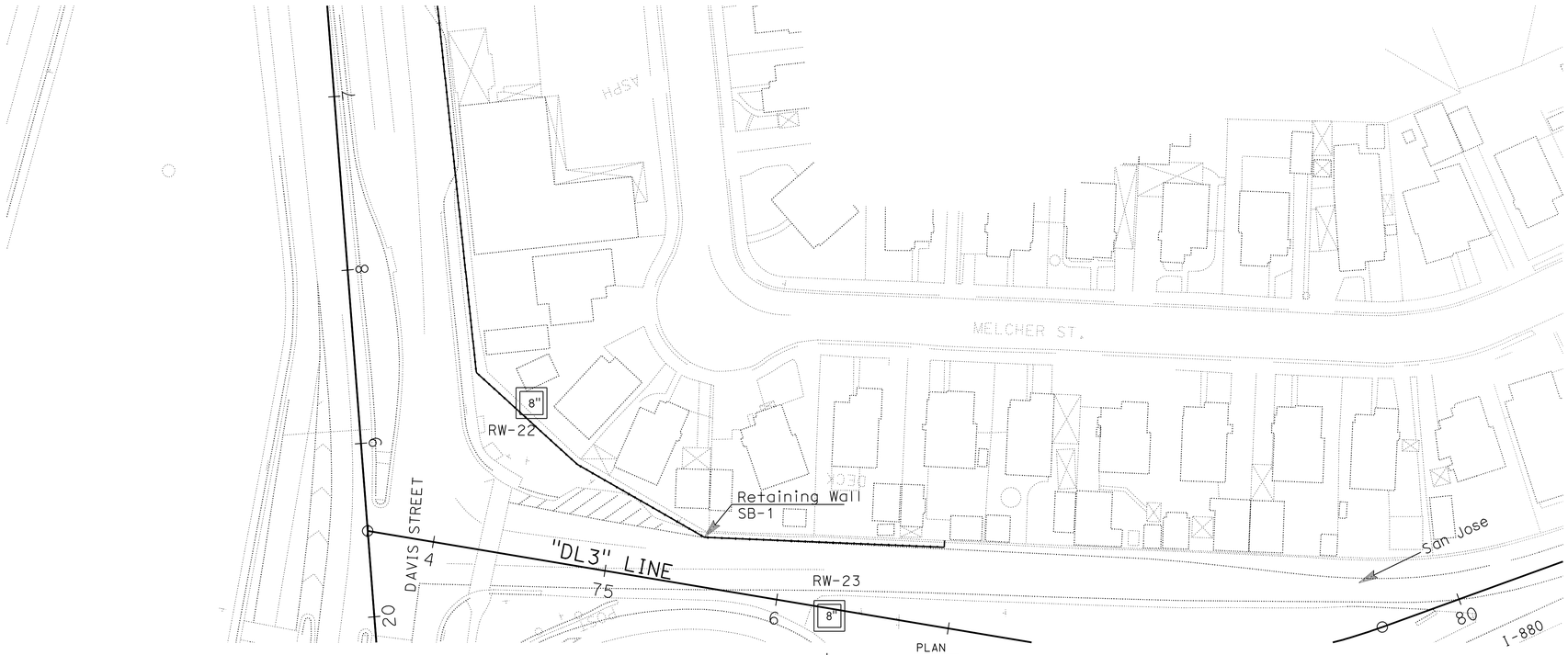

Note:
Standard Penetration Test Sampler: I.D. = 1.4"; O.D. = 2"
Modified California Sampler: I.D. = 2.5"; O.D. = 3"
Hammer Assembly: A 140 lb hammer with a 30" drop
(Automatic Hammer)

ALL DIMENSIONS ARE IN FEET UNLESS OTHERWISE SHOWN

PROFILE
Vert. : 1" = 10'
Hor. : 1" = 40'

DESIGN OVERSIGHT	DRAWN BY	L. Tran	L. Bhangoo, G. Tripathi — FIELD INVESTIGATION BY:
SIGN OFF DATE	CHECKED BY	D. Wang	DATE: June 2008

PREPARED FOR THE STATE OF CALIFORNIA DEPARTMENT OF TRANSPORTATION

David Wang — PROJECT ENGINEER

BRIDGE NO.
POST MILES 22.6/24.0

RETAINING WALL SB-1 R-37
LOG OF TEST BORINGS

GS GEOTECHNICAL LOG OF TEST BORINGS SHEET (ENGLISH) (REV. 7/16/10)

ORIGINAL SCALE IN INCHES FOR REDUCED PLANS 0 1 2 3

CU: 04248
EA: 3A9211

DISREGARD PRINTS BEARING EARLIER REVISION DATES

REVISION DATES — SHEET — OF

FILE => 43a921qe010.dgn

USERNAME => s109858 DATE PLOTTED => 20-APR-2012 TIME PLOTTED => 08:37

NOTE:

FOR ACCURATE RIGHT OF WAY DATA, CONTACT
RIGHT OF WAY ENGINEERING AT THE DISTRICT OFFICE.

Dist	COUNTY	ROUTE	POST MILES TOTAL PROJECT	SHEET No.	TOTAL SHEETS
04	Ala	880	22.6/24.0	477	760

LICENSED LANDSCAPE ARCHITECT

4-16-12
PLANS APPROVAL DATE

LICENSED LANDSCAPE ARCHITECT
LEAH C. HAYGOOD No. 2393
Original Date 08/31/13
Renewal Date 11/16/11
Date
STATE OF CALIFORNIA

THE STATE OF CALIFORNIA OR ITS OFFICERS OR AGENTS SHALL NOT BE RESPONSIBLE FOR THE ACCURACY OR COMPLETENESS OF SCANNED COPIES OF THIS PLAN SHEET.

HAYGOOD & ASSOCIATES
LANDSCAPE ARCHITECTS
1496-B Solano Avenue
Albany, CA 94706

ACTC
1333 Broadway
Suites 220 & 300
Oakland, CA 94612

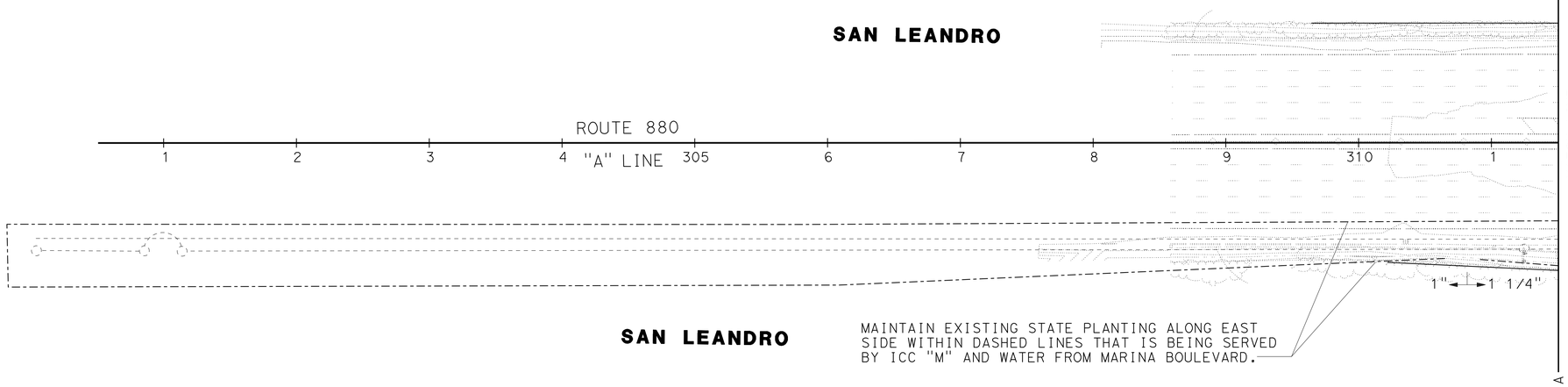

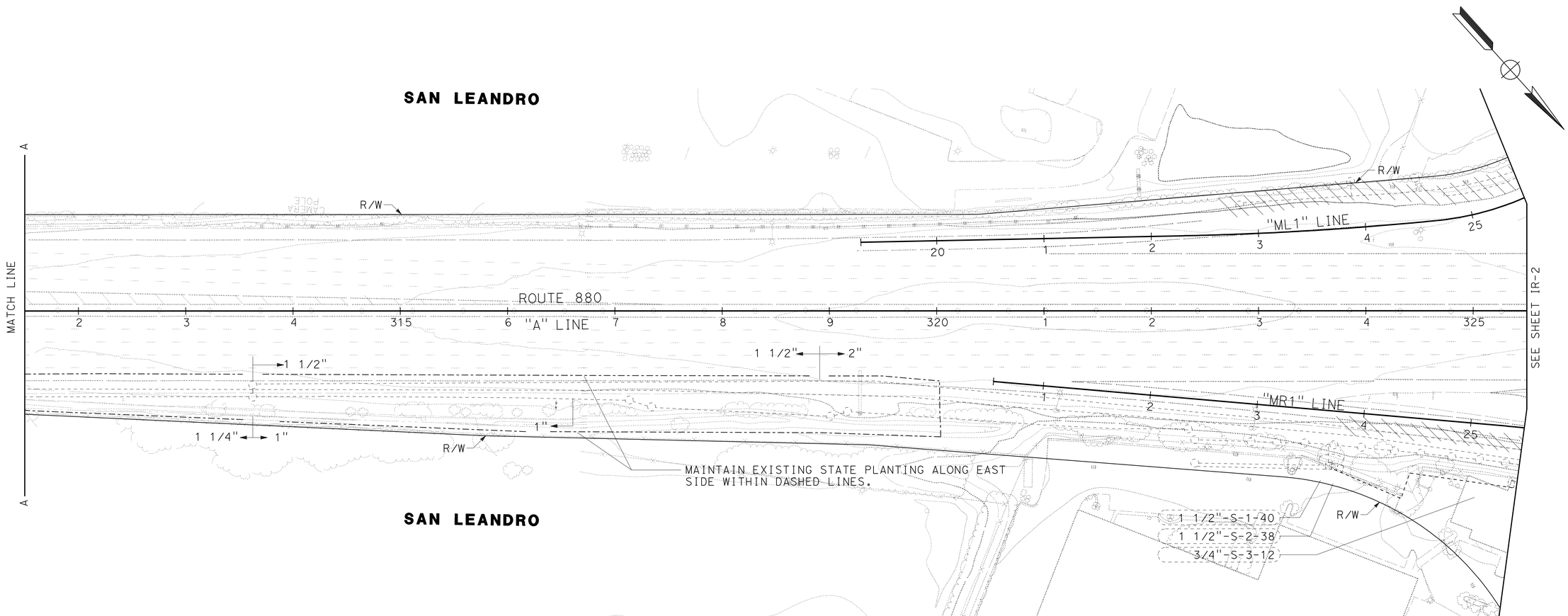

IRRIGATION REMOVAL PLAN

SCALE 1" = 50'

IR-1

APPROVED FOR IRRIGATION REMOVAL WORK ONLY

REVISED BY	DATE REVISED
KATARIINA RAUTIO	11/16/11

CHRIS MITCHELL — LEAH C. HAYGOOD

CALCULATED-DESIGNED BY — CHECKED BY

CONSULTANT SENIOR LANDSCAPE ARCHITECT — LEAH C. HAYGOOD

STATE OF CALIFORNIA - DEPARTMENT OF TRANSPORTATION

Caltrans

LAST REVISION 11-16-11 | DATE PLOTTED => 20-APR-2012 | TIME PLOTTED => 08:37

NOTE:

FOR ACCURATE RIGHT OF WAY DATA, CONTACT RIGHT OF WAY ENGINEERING AT THE DISTRICT OFFICE.

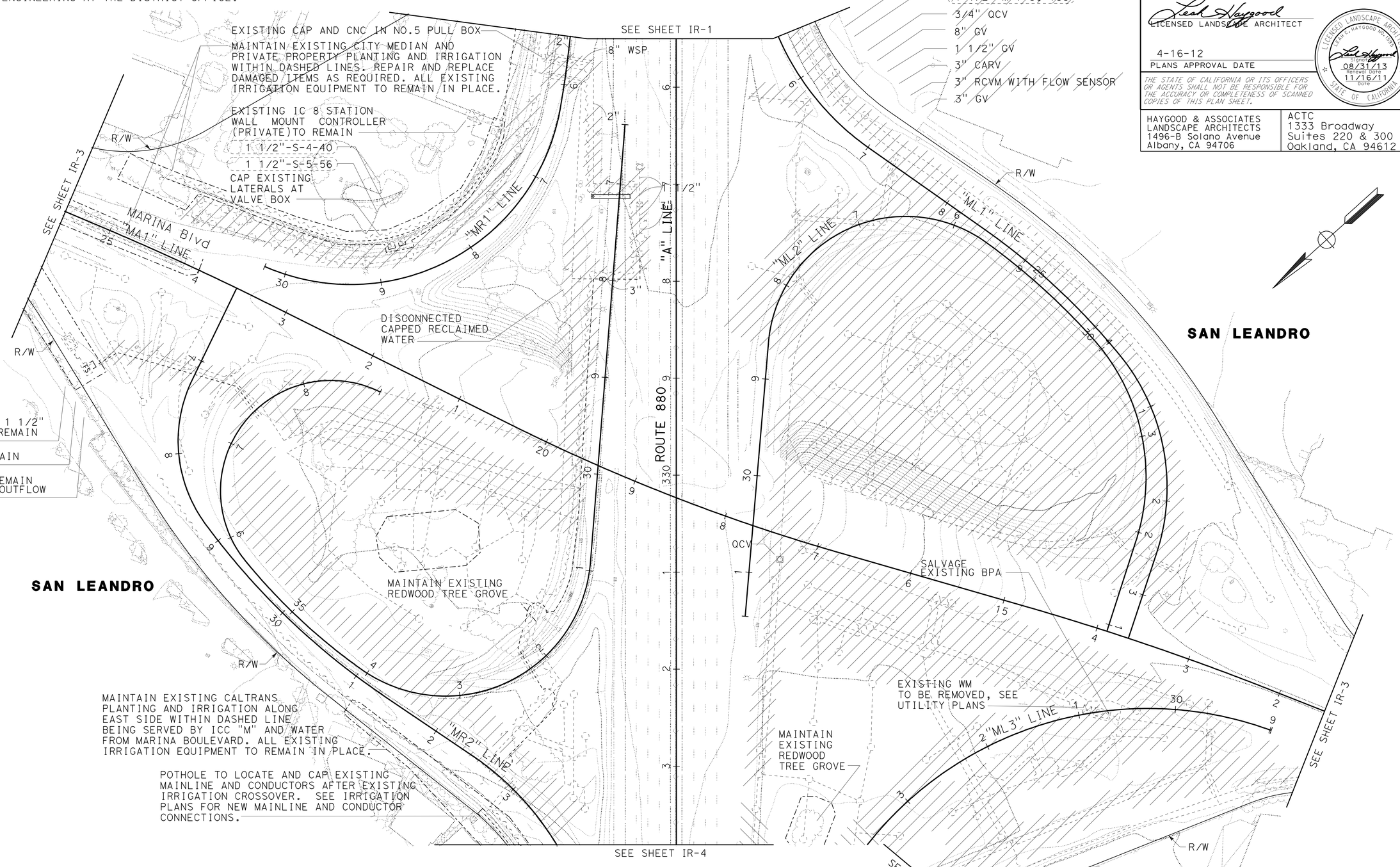

IRRIGATION REMOVAL PLAN

SCALE 1" = 50'

IR-2

Dist	COUNTY	ROUTE	POST MILES TOTAL PROJECT	SHEET No.	TOTAL SHEETS
04	Ala	880	22.6/24.0	478	760

LICENSED LANDSCAPE ARCHITECT

4-16-12
PLANS APPROVAL DATE

LICENSED LANDSCAPE ARCHITECT — LEAH C. HAYGOOD No. 3391 — Original Date 08/31/13 — Renewal Date 11/16/11 — STATE OF CALIFORNIA

THE STATE OF CALIFORNIA OR ITS OFFICERS OR AGENTS SHALL NOT BE RESPONSIBLE FOR THE ACCURACY OR COMPLETENESS OF SCANNED COPIES OF THIS PLAN SHEET.

HAYGOOD & ASSOCIATES
LANDSCAPE ARCHITECTS
1496-B Solano Avenue
Albany, CA 94706

ACTC
1333 Broadway
Suites 220 & 300
Oakland, CA 94612

APPROVED FOR IRRIGATION REMOVAL WORK ONLY

STATE OF CALIFORNIA - DEPARTMENT OF TRANSPORTATION — Caltrans

CONSULTANT SENIOR LANDSCAPE ARCHITECT: LEAH C. HAYGOOD

CALCULATED-DESIGNED BY: CHRIS MITCHELL — CHECKED BY: LEAH C. HAYGOOD

REVISED BY: KATARIINA RAUTIO — DATE REVISED: 11/16/11

LAST REVISION 11-16-11 — DATE PLOTTED => 20-APR-2012 — TIME PLOTTED => 08:37

NOTE:

FOR ACCURATE RIGHT OF WAY DATA, CONTACT
RIGHT OF WAY ENGINEERING AT THE DISTRICT OFFICE.

Dist	COUNTY	ROUTE	POST MILES TOTAL PROJECT	SHEET No.	TOTAL SHEETS
04	Ala	880	22.6/24.0	479	760

LICENSED LANDSCAPE ARCHITECT

4-16-12
PLANS APPROVAL DATE

LICENSED LANDSCAPE ARCHITECT
LEAH C. HAYGOOD No. 3391
Original Date 08/31/13
Renewal Date 11/16/11
Date
STATE OF CALIFORNIA

THE STATE OF CALIFORNIA OR ITS OFFICERS OR AGENTS SHALL NOT BE RESPONSIBLE FOR THE ACCURACY OR COMPLETENESS OF SCANNED COPIES OF THIS PLAN SHEET.

HAYGOOD & ASSOCIATES
LANDSCAPE ARCHITECTS
1496-B Solano Avenue
Albany, CA 94706

ACTC
1333 Broadway
Suites 220 & 300
Oakland, CA 94612

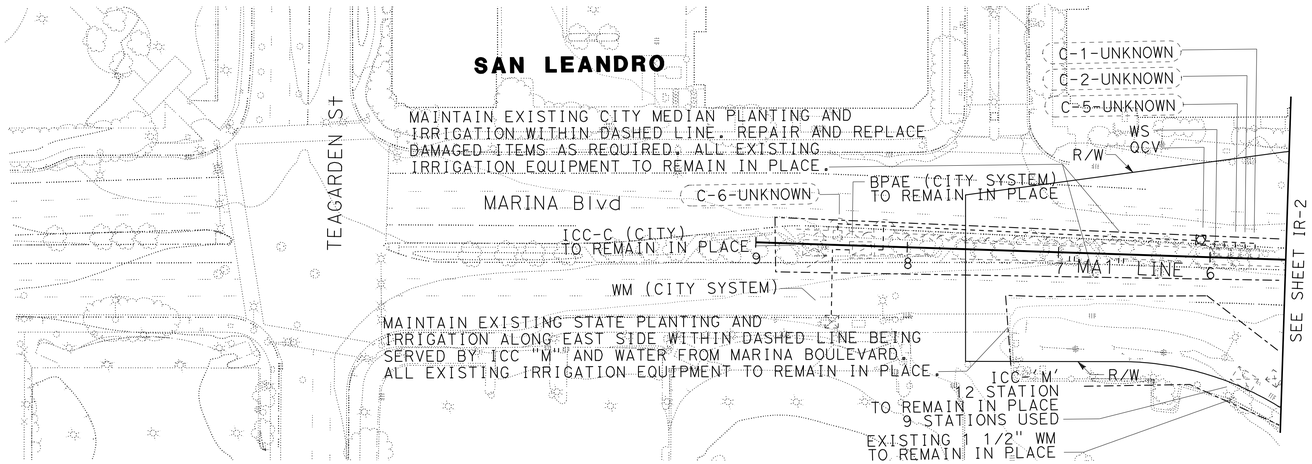

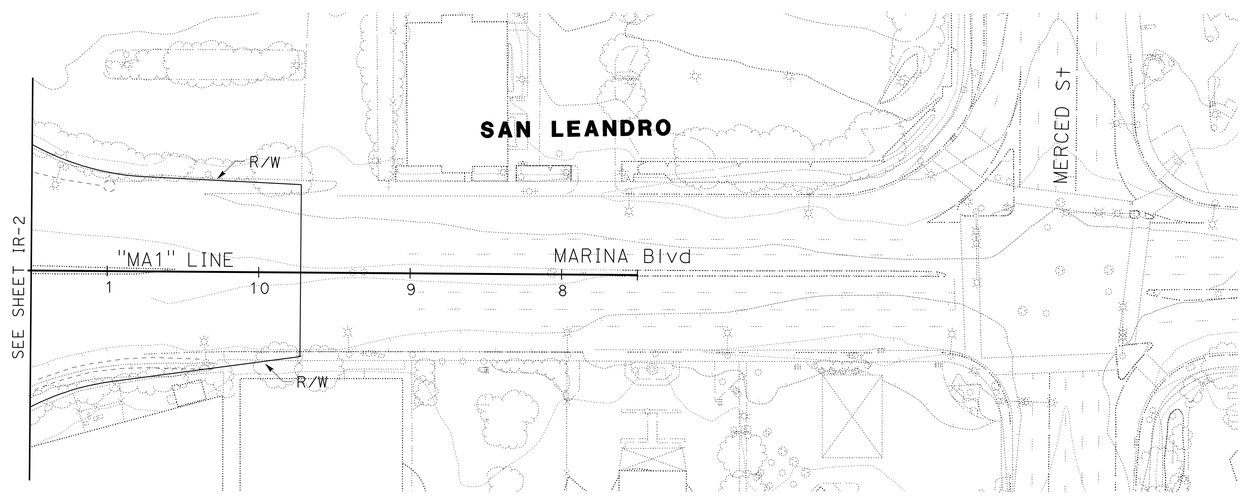

IRRIGATION REMOVAL PLAN

SCALE 1" = 50'

IR-3

APPROVED FOR IRRIGATION REMOVAL WORK ONLY

REVISED BY	DATE REVISED
KATARIINA RAUTIO	11/16/11

CHRIS MITCHELL — LEAH C. HAYGOOD

CALCULATED-DESIGNED BY — CHECKED BY

CONSULTANT SENIOR LANDSCAPE ARCHITECT — LEAH C. HAYGOOD

STATE OF CALIFORNIA - DEPARTMENT OF TRANSPORTATION

Caltrans

LAST REVISION 11-16-11 | DATE PLOTTED => 20-APR-2012 | TIME PLOTTED => 08:37

NOTE:

FOR ACCURATE RIGHT OF WAY DATA, CONTACT
RIGHT OF WAY ENGINEERING AT THE DISTRICT OFFICE.

Dist	COUNTY	ROUTE	POST MILES TOTAL PROJECT	SHEET No.	TOTAL SHEETS
04	Ala	880	22.6/24.0	480	760

LICENSED LANDSCAPE ARCHITECT

4-16-12
PLANS APPROVAL DATE

LICENSED LANDSCAPE ARCHITECT
LEAH C. HAYGOOD No. 2393
Original Date 08/31/13
Renewal Date 11/16/11
Date
STATE OF CALIFORNIA

THE STATE OF CALIFORNIA OR ITS OFFICERS OR AGENTS SHALL NOT BE RESPONSIBLE FOR THE ACCURACY OR COMPLETENESS OF SCANNED COPIES OF THIS PLAN SHEET.

HAYGOOD & ASSOCIATES
LANDSCAPE ARCHITECTS
1496-B Solano Avenue
Albany, CA 94706

ACTC
1333 Broadway
Suites 220 & 300
Oakland, CA 94612

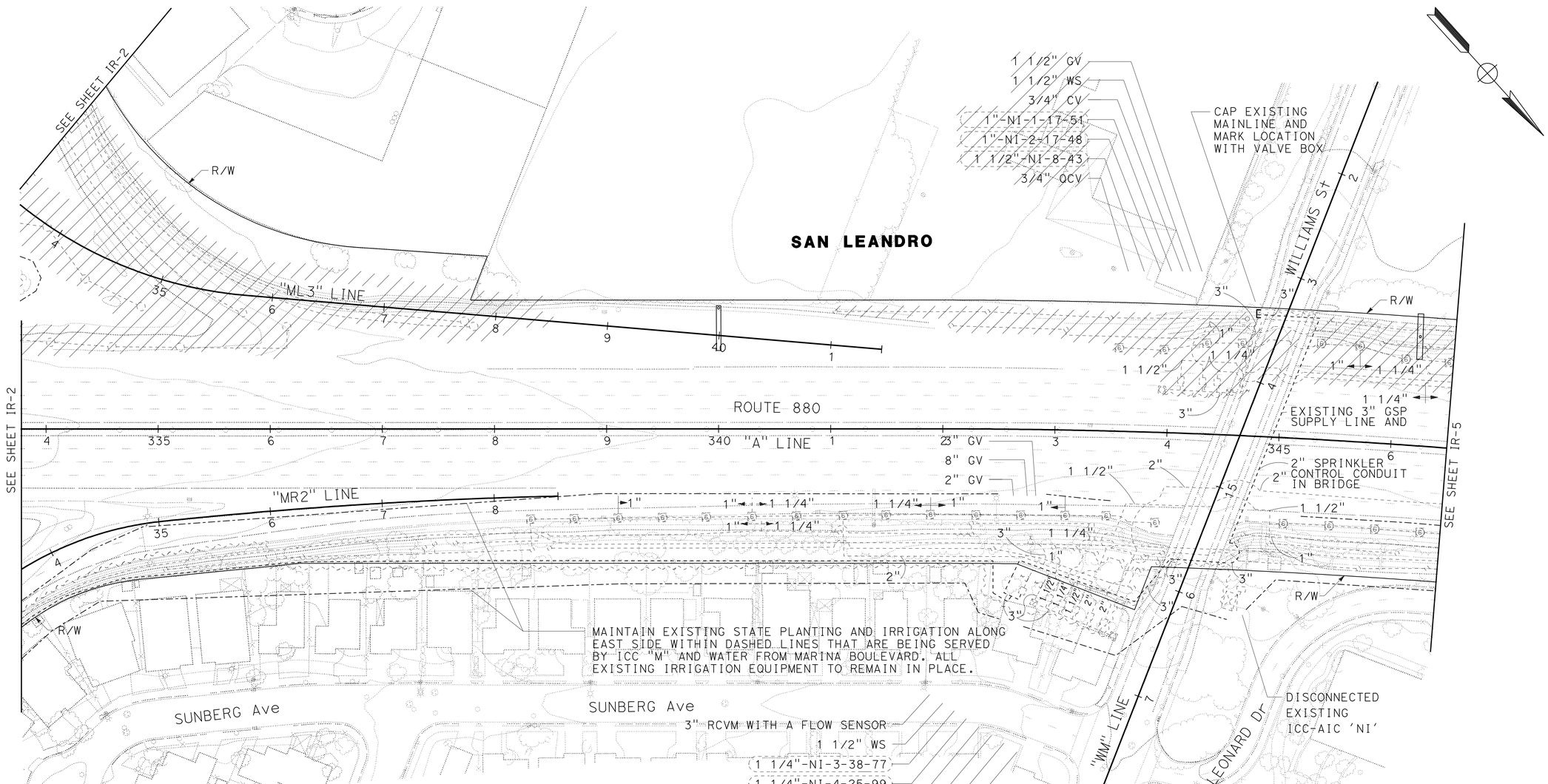

SAN LEANDRO

IRRIGATION REMOVAL PLAN

SCALE 1" = 50'

IR-4

APPROVED FOR IRRIGATION REMOVAL WORK ONLY

STATE OF CALIFORNIA - DEPARTMENT OF TRANSPORTATION
Caltrans

CONSULTANT SENIOR LANDSCAPE ARCHITECT: LEAH C. HAYGOOD
CALCULATED-DESIGNED BY: CHRIS MITCHELL
CHECKED BY: LEAH C. HAYGOOD
REVISED BY: KATARIINA RAUTIO
DATE REVISED: 11/16/11

LAST REVISION 11-16-11
DATE PLOTTED => 20-APR-2012
TIME PLOTTED => 08:37

NOTE:

FOR ACCURATE RIGHT OF WAY DATA, CONTACT
RIGHT OF WAY ENGINEERING AT THE DISTRICT OFFICE.

Dist	COUNTY	ROUTE	POST MILES TOTAL PROJECT	SHEET No.	TOTAL SHEETS
04	Ala	880	22.6/24.0	481	760

LICENSED LANDSCAPE ARCHITECT

4-16-12
PLANS APPROVAL DATE

LICENSED LANDSCAPE ARCHITECT
LEAH C. HAYGOOD No. 2393
Original Date 08/31/13
Renewal Date 11/16/11
Date
STATE OF CALIFORNIA

THE STATE OF CALIFORNIA OR ITS OFFICERS OR AGENTS SHALL NOT BE RESPONSIBLE FOR THE ACCURACY OR COMPLETENESS OF SCANNED COPIES OF THIS PLAN SHEET.

HAYGOOD & ASSOCIATES
LANDSCAPE ARCHITECTS
1496-B Solano Avenue
Albany, CA 94706

ACTC
1333 Broadway
Suites 220 & 300
Oakland, CA 94612

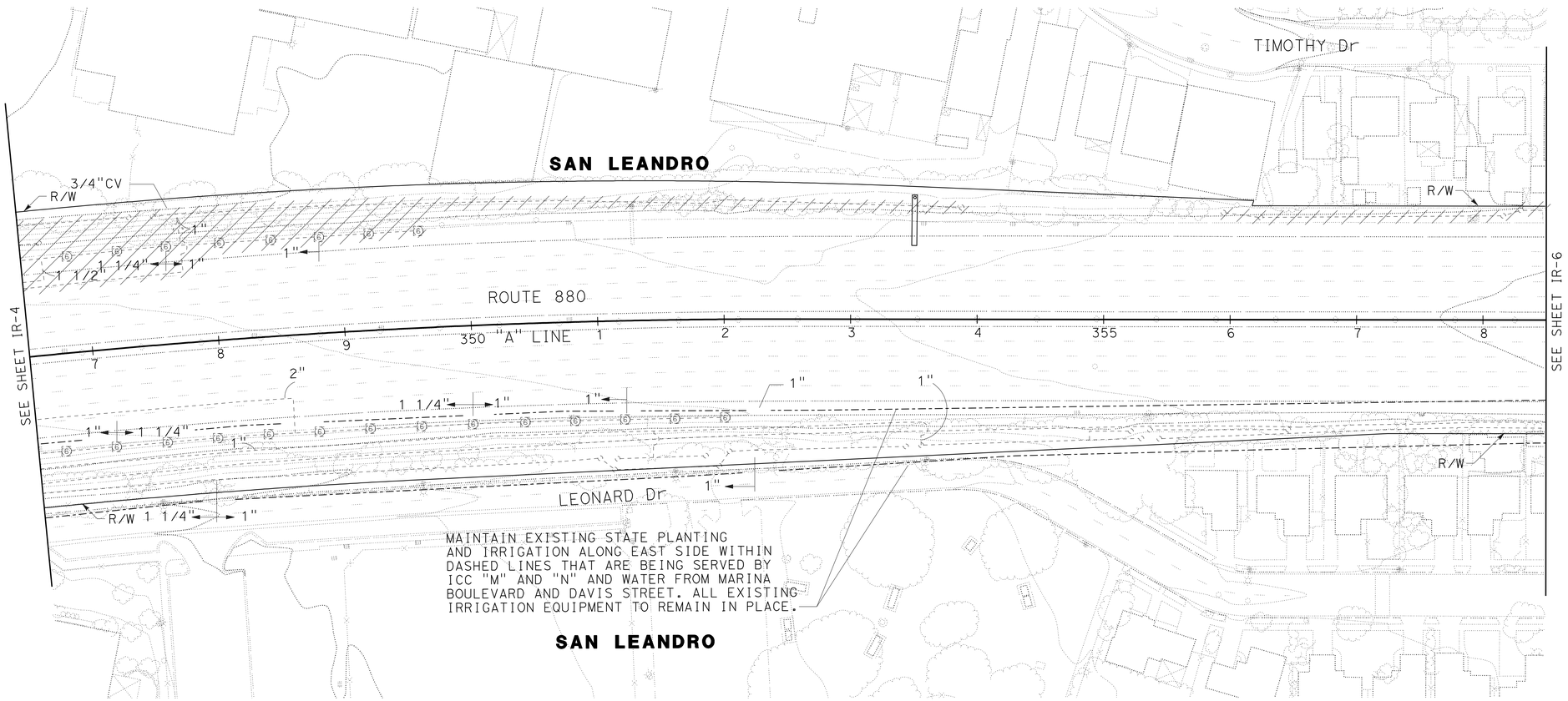

IRRIGATION REMOVAL PLAN

SCALE 1" = 50'

IR-5

APPROVED FOR IRRIGATION WORK ONLY

STATE OF CALIFORNIA - DEPARTMENT OF TRANSPORTATION
Caltrans

CONSULTANT SENIOR LANDSCAPE ARCHITECT: LEAH C. HAYGOOD

CALCULATED-DESIGNED BY: CHRIS MITCHELL
CHECKED BY: LEAH C. HAYGOOD

REVISED BY: KATARIINA RAUTIO
DATE REVISED: 11/16/11

LAST REVISION 11-16-11
DATE PLOTTED => 20-APR-2012
TIME PLOTTED => 09:04

NOTE:

FOR ACCURATE RIGHT OF WAY DATA, CONTACT
RIGHT OF WAY ENGINEERING AT THE DISTRICT OFFICE.

Dist	COUNTY	ROUTE	POST MILES TOTAL PROJECT	SHEET No.	TOTAL SHEETS
04	Ala	880	22.6/24.0	482	760

LICENSED LANDSCAPE ARCHITECT

4-16-12
PLANS APPROVAL DATE

LICENSED LANDSCAPE ARCHITECT
LEAH C. HAYGOOD No. 2393
Original Date 08/31/13
Renewal Date 11/16/11
STATE OF CALIFORNIA

THE STATE OF CALIFORNIA OR ITS OFFICERS OR AGENTS SHALL NOT BE RESPONSIBLE FOR THE ACCURACY OR COMPLETENESS OF SCANNED COPIES OF THIS PLAN SHEET.

HAYGOOD & ASSOCIATES
LANDSCAPE ARCHITECTS
1496-B Solano Avenue
Albany, CA 94706

ACTC
1333 Broadway
Suites 220 & 300
Oakland, CA 94612

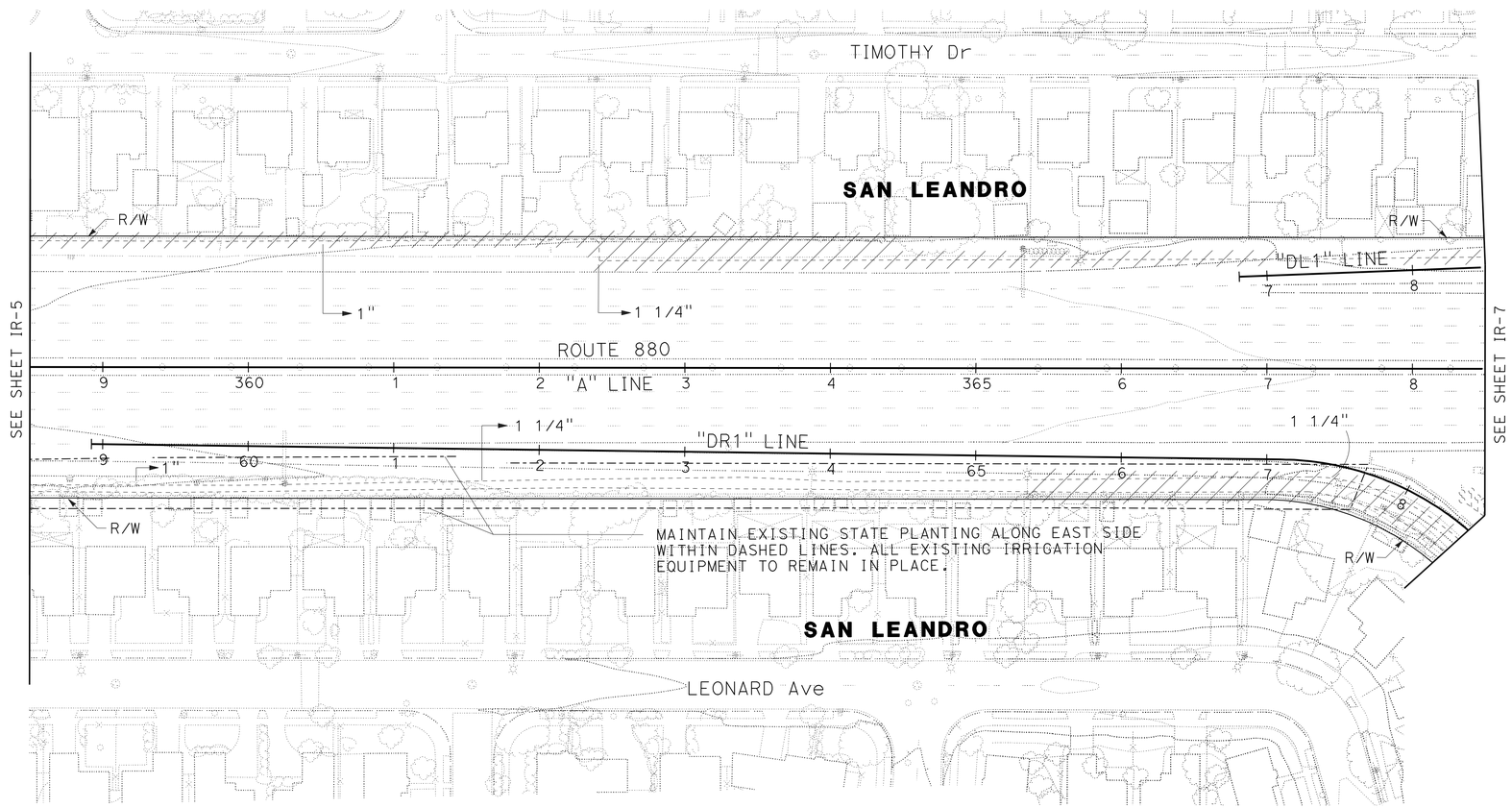

IRRIGATION REMOVAL PLAN

SCALE 1" = 50'

IR-6

APPROVED FOR IRRIGATION WORK ONLY

STATE OF CALIFORNIA - DEPARTMENT OF TRANSPORTATION
Caltrans

CONSULTANT SENIOR LANDSCAPE ARCHITECT
LEAH C. HAYGOOD

CALCULATED-DESIGNED BY CHRIS MITCHELL
CHECKED BY LEAH C. HAYGOOD

REVISED BY KATARIINA RAUTIO
DATE REVISED 11/16/11

LAST REVISION 11-16-11
DATE PLOTTED => 20-APR-2012
TIME PLOTTED => 09:04

Dist	COUNTY	ROUTE	POST MILES TOTAL PROJECT	SHEET No.	TOTAL SHEETS
04	Ala	880	22.6/24.0	483	760

LICENSED LANDSCAPE ARCHITECT

4-16-12
PLANS APPROVAL DATE

LICENSED LANDSCAPE ARCHITECT — LEAH C. HAYGOOD No. 2393 — Signature — Expiration Date 08/31/13 — Renewal Date 11/16/11 — Date — STATE OF CALIFORNIA

THE STATE OF CALIFORNIA OR ITS OFFICERS OR AGENTS SHALL NOT BE RESPONSIBLE FOR THE ACCURACY OR COMPLETENESS OF SCANNED COPIES OF THIS PLAN SHEET.

HAYGOOD & ASSOCIATES
LANDSCAPE ARCHITECTS
1496-B Solano Avenue
Albany, CA 94706

ACTC
1333 Broadway
Suites 220 & 300
Oakland, CA 94612

NOTE:

FOR ACCURATE RIGHT OF WAY DATA, CONTACT RIGHT OF WAY ENGINEERING AT THE DISTRICT OFFICE.

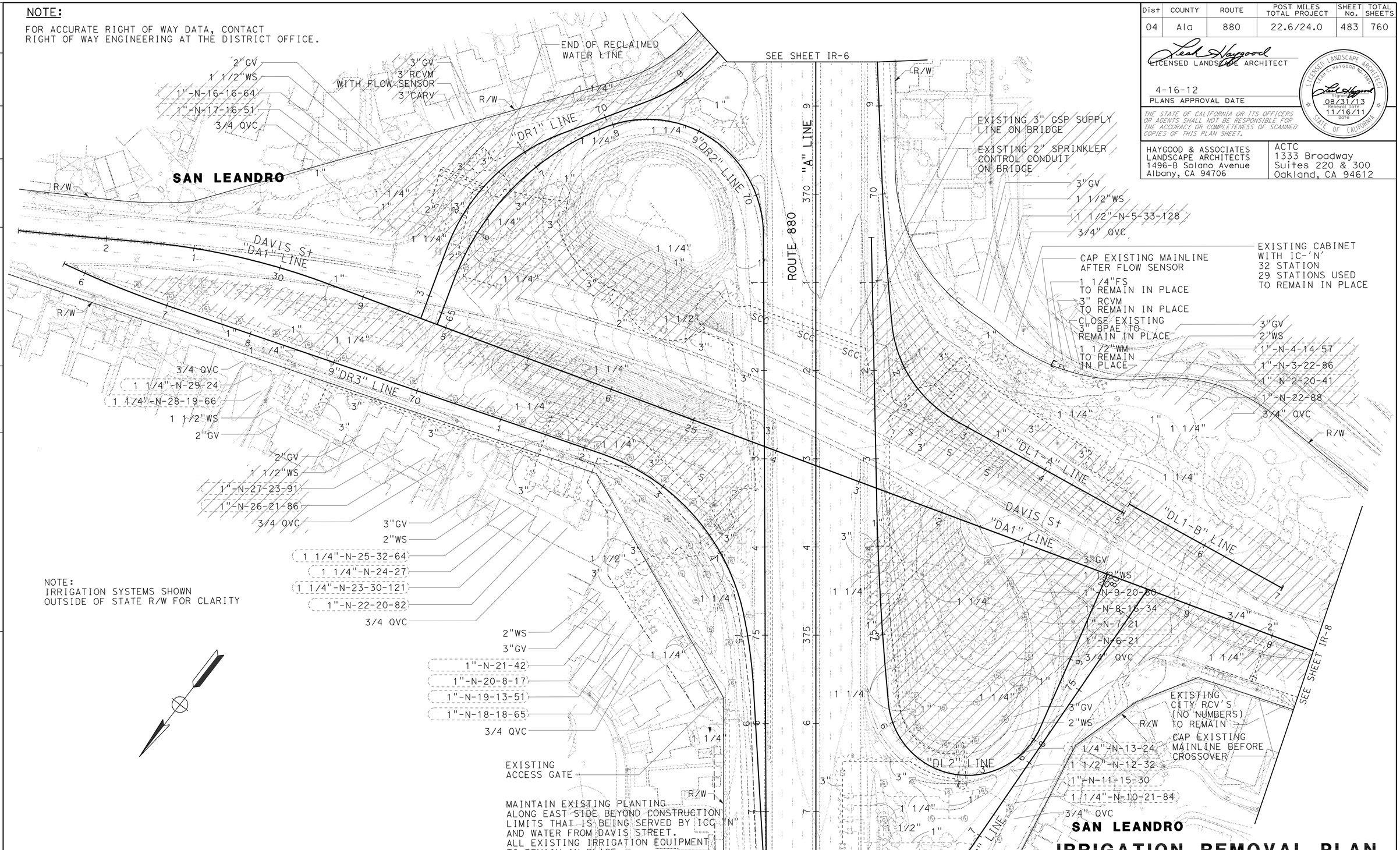

NOTE:
IRRIGATION SYSTEMS SHOWN OUTSIDE OF STATE R/W FOR CLARITY

SAN LEANDRO

IRRIGATION REMOVAL PLAN

SCALE 1" = 50'

IR-7

APPROVED FOR IRRIGATION WORK ONLY

REVISED BY	DATE REVISED
KATARINA RAUTIO	11/16/11

CHRIS MITCHELL — CALCULATED-DESIGNED BY
LEAH C. HAYGOOD — CHECKED BY
LEAH C. HAYGOOD — CONSULTANT SENIOR LANDSCAPE ARCHITECT

STATE OF CALIFORNIA - DEPARTMENT OF TRANSPORTATION
Caltrans

LAST REVISION 11-16-11 | DATE PLOTTED => 20-APR-2012 | TIME PLOTTED => 09:04

NOTE:

FOR ACCURATE RIGHT OF WAY DATA, CONTACT
RIGHT OF WAY ENGINEERING AT THE DISTRICT OFFICE.

Dist	COUNTY	ROUTE	POST MILES TOTAL PROJECT	SHEET No.	TOTAL SHEETS
04	Ala	880	22.6/24.0	484	760

LICENSED LANDSCAPE ARCHITECT

4-16-12
PLANS APPROVAL DATE

LICENSED LANDSCAPE ARCHITECT
LEAH C. HAYGOOD No. 2393
Original Date 08/31/13
Renewal Date 11/16/11
Date
STATE OF CALIFORNIA

THE STATE OF CALIFORNIA OR ITS OFFICERS OR AGENTS SHALL NOT BE RESPONSIBLE FOR THE ACCURACY OR COMPLETENESS OF SCANNED COPIES OF THIS PLAN SHEET.

HAYGOOD & ASSOCIATES
LANDSCAPE ARCHITECTS
1496-B Solano Avenue
Albany, CA 94706

ACTC
1333 Broadway
Suites 220 & 300
Oakland, CA 94612

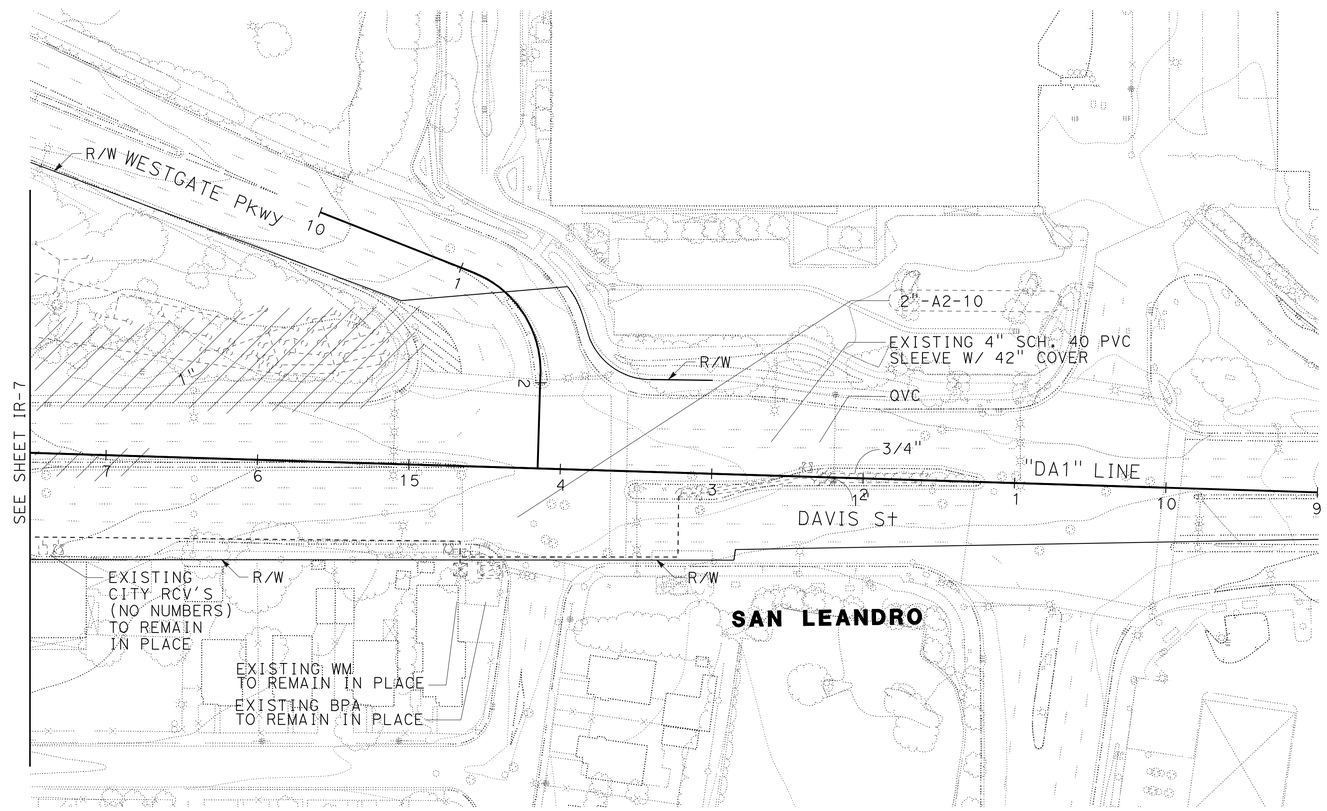

IRRIGATION REMOVAL PLAN

SCALE 1" = 50'

IR-8

APPROVED FOR IRRIGATION WORK ONLY

STATE OF CALIFORNIA - DEPARTMENT OF TRANSPORTATION

Caltrans

CONSULTANT SENIOR LANDSCAPE ARCHITECT: LEAH C. HAYGOOD

CALCULATED-DESIGNED BY: CHRIS MITCHELL

CHECKED BY: LEAH C. HAYGOOD

REVISED BY: KATARIINA RAUTIO

DATE REVISED: 11/16/11

LAST REVISION 11-16-11

DATE PLOTTED => 20-APR-2012
TIME PLOTTED => 09:05

NOTE:

FOR ACCURATE RIGHT OF WAY DATA, CONTACT
RIGHT OF WAY ENGINEERING AT THE DISTRICT OFFICE.

Dist	COUNTY	ROUTE	POST MILES TOTAL PROJECT	SHEET No.	TOTAL SHEETS
04	Ala	880	22.6/24.0	485	760

LICENSED LANDSCAPE ARCHITECT

4-16-12
PLANS APPROVAL DATE

LICENSED LANDSCAPE ARCHITECT
LEAH C. HAYGOOD No. 3393
Original Date 08/31/13
Renewal Date 11/16/11
Date
STATE OF CALIFORNIA

THE STATE OF CALIFORNIA OR ITS OFFICERS OR AGENTS SHALL NOT BE RESPONSIBLE FOR THE ACCURACY OR COMPLETENESS OF SCANNED COPIES OF THIS PLAN SHEET.

HAYGOOD & ASSOCIATES
LANDSCAPE ARCHITECTS
1496-B Solano Avenue
Albany, CA 94706

ACTC
1333 Broadway
Suites 220 & 300
Oakland, CA 94612

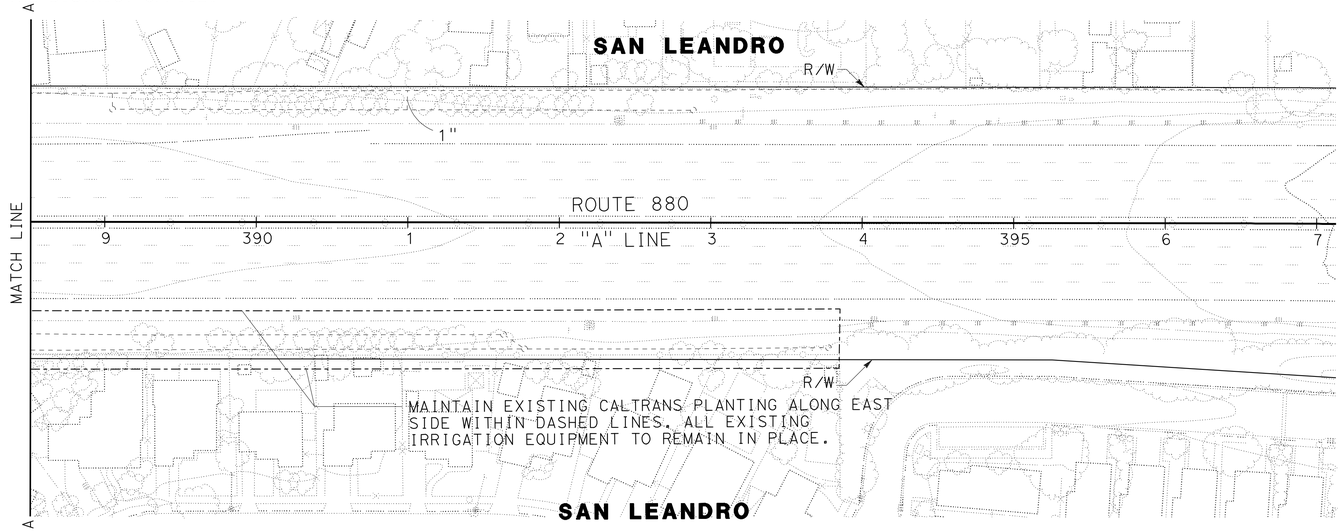

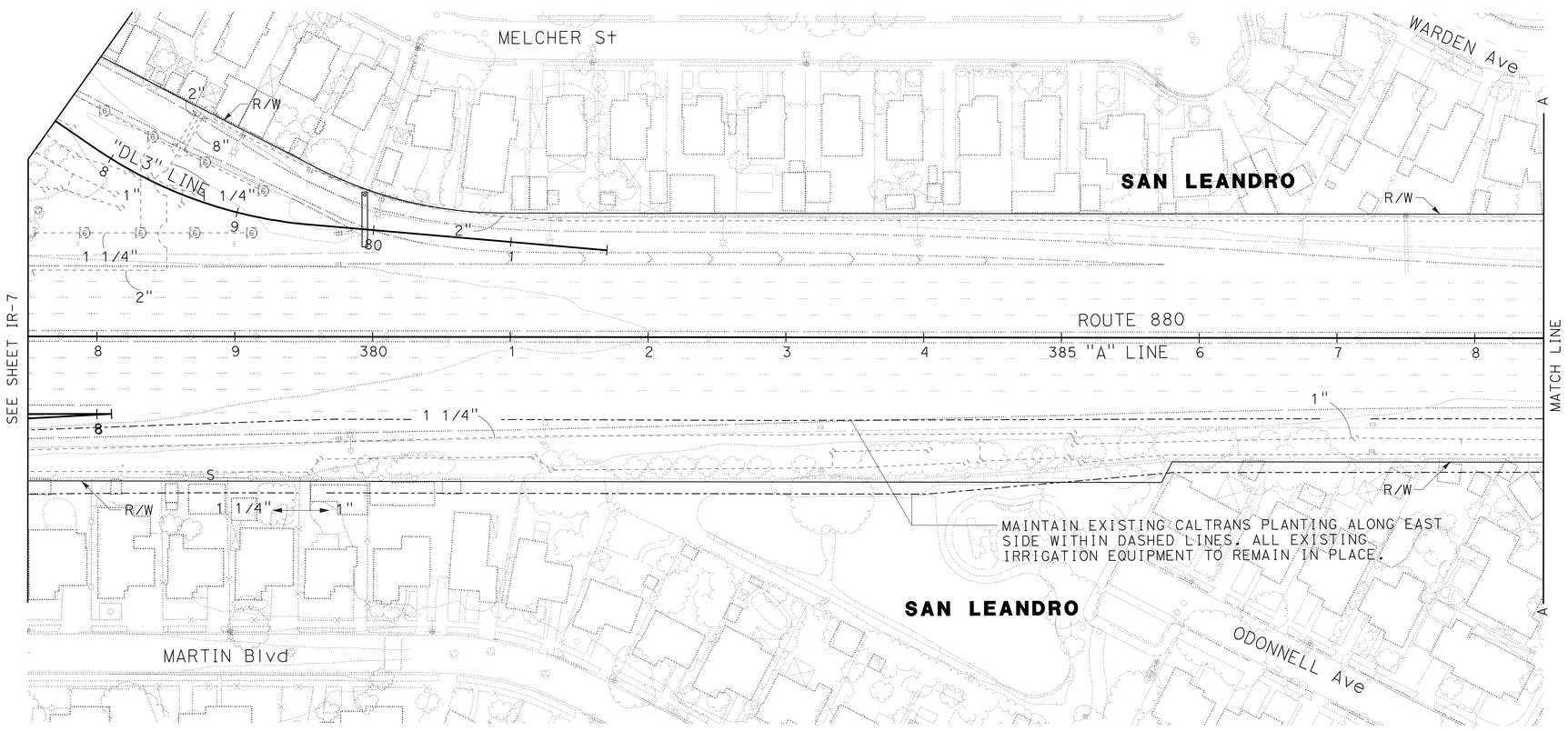

IRRIGATION REMOVAL PLAN

SCALE 1" = 50'

IR-9

APPROVED FOR IRRIGATION WORK ONLY

STATE OF CALIFORNIA - DEPARTMENT OF TRANSPORTATION
Caltrans

CONSULTANT SENIOR LANDSCAPE ARCHITECT: LEAH C. HAYGOOD

CALCULATED-DESIGNED BY: CHRIS MITCHELL
CHECKED BY: LEAH C. HAYGOOD

REVISED BY: KATARIINA RAUTIO
DATE REVISED: 11/16/11

LAST REVISION 11-16-11
DATE PLOTTED => 20-APR-2012
TIME PLOTTED => 09:05

Dist	COUNTY	ROUTE	POST MILES TOTAL PROJECT	SHEET No.	TOTAL SHEETS
04	Ala	880	22.6/24.0	486	760

Leah Haygood
LICENSED LANDSCAPE ARCHITECT

4-16-12
PLANS APPROVAL DATE

LICENSED LANDSCAPE ARCHITECT
LEAH C. HAYGOOD No. 2393
Leah Haygood
Signature
08/31/13
Renewal Date
11/16/11
Date
STATE OF CALIFORNIA

THE STATE OF CALIFORNIA OR ITS OFFICERS OR AGENTS SHALL NOT BE RESPONSIBLE FOR THE ACCURACY OR COMPLETENESS OF SCANNED COPIES OF THIS PLAN SHEET.

HAYGOOD & ASSOCIATES
LANDSCAPE ARCHITECTS
1496-B Solano Avenue
Albany, CA 94706

ACTC
1333 Broadway
Suites 220 & 300
Oakland, CA 94612

NOTE:

FOR ACCURATE RIGHT OF WAY DATA, CONTACT RIGHT OF WAY ENGINEERING AT THE DISTRICT OFFICE.

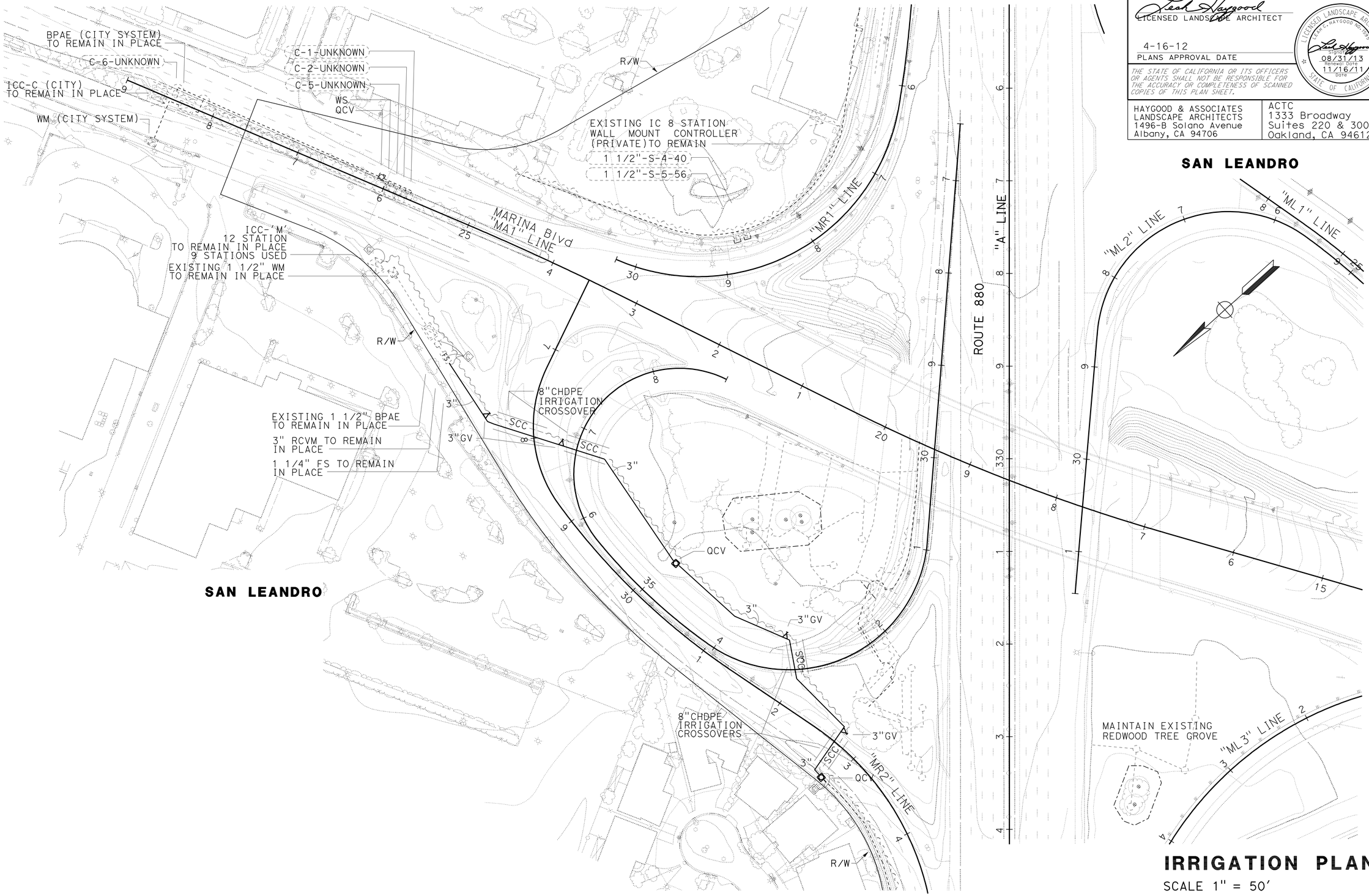

IRRIGATION PLAN

SCALE 1" = 50'

IP-1

APPROVED FOR IRRIGATION WORK ONLY.

REVISED BY	DATE REVISED
KATARIINA RAUTIO	11/16/11

CHRIS MITCHELL — LEAH C. HAYGOOD
CALCULATED-DESIGNED BY — CHECKED BY
CONSULTANT SENIOR LANDSCAPE ARCHITECT — LEAH C. HAYGOOD

STATE OF CALIFORNIA - DEPARTMENT OF TRANSPORTATION
Caltrans

LAST REVISION 11-16-11
DATE PLOTTED => 20-APR-2012
TIME PLOTTED => 10:57

Dist	COUNTY	ROUTE	POST MILES TOTAL PROJECT	SHEET No.	TOTAL SHEETS
04	Ala	880	22.6/24.0	487	760

REGISTERED CIVIL ENGINEER — DATE 11-18-11

4-16-12
PLANS APPROVAL DATE

REGISTERED PROFESSIONAL ENGINEER — KIN Y. CHAN No. 55391 Exp. 12/31/12 CIVIL — STATE OF CALIFORNIA

THE STATE OF CALIFORNIA OR ITS OFFICERS OR AGENTS SHALL NOT BE RESPONSIBLE FOR THE ACCURACY OR COMPLETENESS OF SCANNED COPIES OF THIS PLAN SHEET.

Y&C TRANSPORTATION CONSULTANTS, INC.
3250 Ramos Circle
Sacramento, CA 95827

ALAMEDA COUNTY CONGESTION MANAGEMENT AGENCY
1333 Broadway, Suite 220
Oakland, CA 94612

ELECTRICAL INDEX

E-1 TO E-3	ELECTRICAL INDEX, NOTES, ABBREVIATIONS AND LEGEND
E-4 TO E-10	LIGHTING AND SIGN ILLUMINATION
E-11 TO E-13	LIGHTING (CITY STREET)
E-14 TO E-20	TRAFFIC OPERATIONS SYSTEM
E-21 TO E-23	FIBER OPTIC SYSTEM (CITY)
E-24 TO E-35	SIGNAL AND LIGHTING
E-36 TO E-50	ELECTRICAL DETAILS
E-51 TO E-55	ELECTRICAL NOTES AND LEGEND (STAGE CONSTRUCTION)
E-56 TO E-68	LIGHTING AND SIGN ILLUMINATION (STAGE CONSTRUCTION)
E-69 TO E-89	TRAFFIC OPERATIONS SYSTEM (STAGE CONSTRUCTION)
E-90 TO E-124	SIGNAL AND LIGHTING (STAGE CONSTRUCTION)
E-125 TO E-128	ELECTRICAL DETAILS (STAGE CONSTRUCTION)

ELECTRICAL GENERAL NOTES

1. NO ABOVE GROUND ELECTRICAL WORK SHALL BE PERFORMED ON ANY SYSTEM WITHIN THE PROJECT SITE UNTIL ALL CONTRACTOR-FURNISHED ELECTRICAL MATERIALS FOR THAT INDIVIDUAL SYSTEM HAVE BEEN TESTED AND DELIVERED TO CONTRACTOR.
2. THE NEUTRAL CONDUCTOR SHALL RUN FROM THE EQUIPMENT ENCLOSURE TO THE CONTROLLER CABINET WITHOUT SPLICING TO ANY OTHER NEUTRAL CONDUCTOR.
3. THE CLEARANCE BETWEEN THE BOTTOM OF THE LOWEST CIRCUIT BREAKER AND THE BOTTOM OF THE SERVICE EQUIPMENT ENCLOSURE FOR A TYPE III-A SERIES SHALL BE 24 INCHES MINIMUM.
4. NO OVERHEAD SIGN PANEL SHALL BE INSTALLED UNTIL THE OVERHEAD SIGN LIGHTING IS COMPLETELY OPERATIONAL.
5. WHERE ONE OR MORE TRAFFIC SIGNAL DETECTOR(S) CONSIST OF A SEQUENCE OF 4 LOOPS IN A SINGLE LANE, THE FRONT LOOP CLOSEST TO THE LIMIT LINE OR CROSSWALK SHALL BE LOCATED 1 FOOT FROM THE LINE. THE SET OF 3 LOOPS OR 4 LOOPS ASSIGNED TO THE SAME LOOP DETECTOR LEAD-IN CABLE (DLC) SHALL BE CONNECTED IN SERIES FOR TRAFFIC SIGNAL SYSTEM ONLY AND NOT FOR RAMP METERING SYSTEM.
6. PULL BOXES FOR CIRCUITS LABELED "CITY CIRCUIT" ON THE PLANS SHALL NOT HAVE THE "CALTRANS" COVER MARKING. THE COVERS SHALL BE MARKED "CITY".
7. COLOR CODING OF TRAFFIC SIGNAL CONDUCTOR FOR OVERLAP PHASES, SEE DETAIL B ON SHEET E-29, "CONDUCTOR, POLE AND EQUIPMENT SCHEDULES".
8. WHERE 6 OR MORE 3-INCH CONDUITS ENTER A No. 6 PULL BOX, THE CONDUITS SHALL ENTER AT AN ANGLE NOT GREATER THAN 45-DEGREES FROM THE HORIZONTAL.
9. SLEEVE NUTS SHALL BE USED ON TYPE 1-B STANDARD. FOUNDATIONS FOR TYPE 1-B STANDARDS SHALL CONFORM TO THE DETAILS ON STANDARD PLANS ES-7B, "ANCHOR BOLTS WITH SLEEVE NUTS", EXCEPT THAT THE BOTTOM OF THE BASE PLATE SHALL BE FLUSH WITH THE FINISHED GRADE.
10. THE CONTRACTOR SHALL COMPLY WITH THE SIGN PLANS FOR SIGNS MOUNTED ON SIGNAL AND LIGHTING STANDARDS.
11. ALL No. 9 PULL BOXES SHALL BE PROVIDED ONLY WITH KNOCKOUTS THAT MATCH THE NUMBER AND SIZE OF THE CONDUITS ENTERING THE PULL BOX AS SHOWN ON THE PLANS.
12. THE CONTRACTOR SHALL REPAIR THE HOLE AND DAMAGE AFTER RELOCATING OR REMOVING EXISTING EQUIPMENT FROM EXISTING SIGNAL OR LIGHTING POLE.

ABBREVIATIONS

ACC	ANTENNA COAXIAL CABLE
APS	ACCESSIBLE PEDESTRIAN SIGNAL
AT&T	AMERICAN TELEPHONE AND TELEGRAPH
CCU	CAMERA CONTROL UNIT
CTID	CALTRANS IDENTIFICATION
FOC	FIBER OPTIC CABLE
foc	EXISTING FIBER OPTIC CABLE
GPRS	GENERAL PACKET RADIO SYSTEM
HCC	HYBRID CAMERA CABLE
hcc	EXISTING HYBRID CAMERA CABLE
LLLD	LONG LEAD LOOP DETECTOR
MDCS	MULTIPLE DUCT CONDUIT SYSTEM
N/C	NO CONNECTION
PDA	POWER DISTRIBUTION ASSEMBLY
PG&E	PACIFIC GAS AND ELECTRIC
RSP	REVISED STANDARD PLAN
TBO	TERMINAL BLOCK O
TC	TELEPHONE CABLE
tc	EXISTING TELEPHONE CABLE
TOU	"TIME OF USE" METER SOCKET
tvc	EXISTING TV CONTROL CABLE
tvcp	EXISTING TV CONTROL POWER CABLE
tvl	EXISTING TV LINE CABLE
tvp	EXISTING TV POWER CABLE
T/R	TIP AND RING
VEU	VIDEO ENCODER UNIT

LEGEND

	RAMP METER SIGNAL, POLE-MOUNTED. SEE DETAILS ON SHEET E-45.
CIRCUIT No. 1	TYPE 15 (STRUCTURE) STREET LIGHT WITH 240 V/200 W HPS FOR CITY STREET. MAST ARM LENGTH AS INDICATED ON THE PLAN.
CIRCUIT No. 1	TYPE 15 STREET LIGHT WITH 240 V/200 W HPS FOR CITY STREET. MAST ARM LENGTH AS INDICATED ON THE PLAN.
	EXISTING CITY STREET LIGHT
PGE	PG&E PULL BOX PER SERVICE UTILITY REQUIREMENTS

PROJECT NOTES:

1. RELOCATED CAMERA STATION: RELOCATE EXISTING MODEL 334 CABINET WITH ALL CCTV EQUIPMENT TO NEW LOCATION AS SHOWN.
2. SEE SHEETS E-44 AND E-45 FOR RAMP METERING DETECTOR, TMS AND RM SIGNAL POLE INSTALLATION DETAILS.
3. INSTALL TYPE 1-B POLE WITH A PEU. SEE DETAILS ON ES-7N.
4. CAMERA STATION: INSTALL INTEGRATED CAMERA UNIT ON TYPE CCTV 45 POLE. SEE SHEETS E-38 THROUGH E-40 FOR INSTALLATION DETAILS.
5. INSTALL GPRS WIRELESS MODEM ASSEMBLY, ANTENNA, POWER SUPPLY AND TERMINAL BLOCK IN CABINET. SEE DETAILS ON SHEET E-41.
6. RC EXISTING PULL BOX. INSTALL PULL BOX. THE TYPE OF PULL BOX IS INDICATED ON THE PLANS.
7. INSTALL STATE-FURNISHED MODEL 500 LED CMS PANEL. SEE SIGN PLANS FOR EXACT LOCATION AND INSTALLATION DETAILS. INSTALL CMS SAFETY SWITCH ON POLE ON SIDE AWAY FROM ONCOMING TRAFFIC.
8. INSTALL TYPE 1-B POLE WITH "METER ON" SIGNAL. SEE DETAIL ON SHEET E-45.
9. EXISTING MODEL 170 CONTROLLER ASSEMBLY FOR EXISTING TRAFFIC MONITORING STATION TO REMAIN.
10. INSTALL NEW INDUCTION SIGN LIGHTING FIXTURE AS INDICATED ON THE PLAN.
11. INSTALL STATE-FURNISHED MODEL 170 CONTROLLER ASSEMBLY WITH MODEL 334 CABINET.
12. INSTALL STATE-FURNISHED MODEL 2070 CONTROLLER ASSEMBLY WITH MODEL 332 CABINET.
13. EXISTING TYPE III-AF SERVICE EQUIPMENT ENCLOSURE TO REMAIN.
14. INSTALL TYPE 1-B POLE WITH RAMP METERING SIGNAL. SEE DETAIL "SIG" ON SHEET E-45.
15. EXISTING TYPE C tdc TO REMAIN.
16. ADJUST EXISTING VEHICLE SIGNAL HEAD.
17. EXISTING MODEL 2070 CONTROLLER ASSEMBLY WITH MODEL 334 CABINET FOR EXISTING RAMP METERING SYSTEM TO REMAIN.
18. EXISTING TYPE 1-B POLE WITH "METER ON" SIGNAL TO REMAIN.
19. TOS TO SHARE THE SAME SERVICE EQUIPMENT ENCLOSURE WITH LIGHTING AND SIGN ILLUMINATION EQUIPMENT. THIS IS A PART OF LIGHTING AND SIGN ILLUMINATION BID ITEM. SEE LIGHTING AND SIGN ILLUMINATION PLANS FOR DETAILS.
20. EXISTING CAMERA STATION: EXISTING MODEL 334 CONTROLLER CABINET AND CCTV SYSTEM EQUIPMENT TO REMAIN.
21. EXISTING CAMERA STATION: EXISTING MODEL 2070 CONTROLLER ASSEMBLY WITH MODEL 334 CABINET FOR CCTV AND RM TO REMAIN.

ELECTRICAL INDEX, NOTES, ABBREVIATIONS AND LEGEND

E-1

STATE OF CALIFORNIA - DEPARTMENT OF TRANSPORTATION
Caltrans

CONSULTANT FUNCTIONAL SUPERVISOR: TIMOTHY J. LEE
CALCULATED-DESIGNED BY: MENG YANG
CHECKED BY: DAN YAU
REVISED BY
DATE REVISED

LAST REVISION 11-18-11
DATE PLOTTED => 19-APR-2012
TIME PLOTTED => 13:31

Dist	COUNTY	ROUTE	POST MILES TOTAL PROJECT	SHEET No.	TOTAL SHEETS
04	Ala	880	22.6/24.0	488	760

REGISTERED CIVIL ENGINEER — DATE 11-18-11

PLANS APPROVAL DATE 4-16-12

REGISTERED PROFESSIONAL ENGINEER — KIN Y. CHAN No. 55391 Exp. 12/31/12 CIVIL — STATE OF CALIFORNIA

THE STATE OF CALIFORNIA OR ITS OFFICERS OR AGENTS SHALL NOT BE RESPONSIBLE FOR THE ACCURACY OR COMPLETENESS OF SCANNED COPIES OF THIS PLAN SHEET.

Y&C TRANSPORTATION CONSULTANTS, INC.
3250 Ramos Circle
Sacramento, CA 95827

ALAMEDA COUNTY CONGESTION MANAGEMENT AGENCY
1333 Broadway, Suite 220
Oakland, CA 94612

PROJECT NOTES:

22 EXISTING IRRIGATION CONTROLLER CABINET TO REMAIN.

23 EXISTING 3-3"C, 9#14, 1#8, 6 dlc. RC ALL CONDUCTORS/CABLES. ADD 1 HCC.

24 COORDINATE WITH PG&E FOR SERVICE CONNECTION.

25 INSTALL TYPE B TELEPHONE DEMARCATION CABINET. SEE SHEETS E-42 AND E-43 FOR WIRING DETAILS.

26 INSTALL No. 5 PULL BOX. SC BY PG&E. COVER SHALL BE MARKED "CITY/PG&E". THIS IS A PG&E TERMINATION POINT.

27 INSTALL PREFORMED INDUCTIVE LOOP AS REQUIRED.

28 2"C, 6#10, 1#8 (N), 2 DLC.

29 EXISTING MODEL 170 CONTROLLER ASSEMBLY TO REMAIN. INSTALL STATE-FURNISHED DETECTOR SENSOR UNIT FOR 1I1L AND 6J3U. RE-DESIGNATE DETECTORS AS SHOWN.

30 RC EXISTING PULL BOX. INSTALL A NEW No. 6(E) PULL BOX.

31 RS EXISTING TYPE III-AF METERED/UNMETERED SERVICE EQUIPMENT ENCLOSURE. INSTALL NEW TYPE III-AF METERED SERVICE EQUIPMENT ENCLOSURE ON EXISTING FOUNDATION.

32 EXISTING 3"C, mt.

33 EXISTING 1½"C, RC ALL CONDUCTORS. ADD 2#6 (240 V LIGHTING), 2#8 (240 V SIGN ILLUMINATION), 2#14 (120 V TEST SWITCH).

34 3"C, 2 HCC.

35 EXISTING 3-3"C, 1 tc, 1 hcc. RC 1 tc, 1 hcc. INSTALL 1 HCC.

36 2"C, 2#6 (480 V LIGHTING).

37 INSTALL PULL BOX NEXT TO MBGR.

38 EXISTING No. 9 PULL BOX IN EXISTING BARRIER TO REMAIN.

39 2"C, 2#6 (480 V LIGHTING), 2#8 (480 V SIGN ILLUMINATION), 2#10 (240 V TEST SWITCH).

40 2"C, 2#8 (480 V SIGN ILLUMINATION), 2#10 (240 V TEST SWITCH).

41 EXISTING 1½"C, 2#6 (480 V LIGHTING). ADD 2#8 (480 V SIGN ILLUMINATION), 2#10 (240 V TEST SWITCH).

42 EXISTING 2"C, 4#6 (480 V LIGHTING), 4#8 (480 V SIGN ILLUMINATION). RC 2#6, 2#8. ADD 2#10 (240 V TEST SWITCH).

43 INSTALL EQUIPMENT 30' FROM ETW.

44 EXISTING 2"C, 3#2 (SERVICE).

45 EXISTING 2"C, 4#6 (480 V LIGHTING), 4#8 (480 V SIGN ILLUMINATION), 5#14 (peu). RC 2#6, 2#8. ADD 2#10 (240 V TEST SWITCH).

46 EXISTING 2"C, 2#6 (240 V LIGHTING), 2#6 (120 V TMS), 2#8 (240 V SIGN ILLUMINATION), 2#10 (120 V tdc), 2#10 (120 V IRRIGATION), 2#14 (120 V TEST SWITCH), 5#14 (peus). ADD 2#6 (120 V CMS CONTROLLER), 3#4 (240 V CMS PANEL).

47 2"C, MT. COORDINATE WITH AT&T FOR SERVICE CONNECTION.

48 3'C, 1 HCC

49 EXISTING 1½"C, 2#6 (240 V LIGHTING), 2#6 (120 V TMS), 2#8 (240 V SIGN ILLUMINATION), 2#14 (120 V TEST SWITCH), 5#14 (peu). RC 5#14.

50 EXISTING 1½"C, 2#6 (240 V LIGHTING), 2#8 (240 V SIGN ILLUMINATION), 2#14 (120 V TEST SWITCH), 5#14 (peu). RC 5#14.

51 EXISTING 1½"C, 2#8 (240 V SIGN ILLUMINATION), 2#14 (120 V TEST SWITCH). ADD 2#6 (240 V LIGHTING).

52 EXISTING 1½"C, mt.

53 2"C, 2#6 (240 V LIGHTING), 2#8 (240 V SIGN ILLUMINATION), 2#14 (120 V TEST SWITCH).

54 EXISTING 1½"C, 2#6 (240 V LIGHTING).

55 2"C, 2#6 (240 V RM), 2#8 (240 V IRRIGATION), 2 DLC.

56 2"C, 2#8 (240 V SIGN ILLUMINATION), 2#14 (120 V TEST SWITCH).

57 EXISTING 1½"C, 2#6 (240 V LIGHTING), 2#8 (240 V SIGN ILLUMINATION), 2#14 (120 V TEST SWITCH).

58 EXISTING 2½"C, 2#6 (240 V LIGHTING), 2#6 (120 V tms), 2#6 (120 V rm), 2#8 (240 V SIGN ILLUMINATION), 2#10 (120 V IRRIGATION), 2#14 (120 V TEST SWITCH), 5#14 (peu).

59 EXISTING 2"C, 2 tc.
EXISTING 2"C, 1 TELEPHONE LINE.

60 2"C, 2#6 (240 V LIGHTING), 2#8 (240 V SIGN ILLUMINATION), 2#14 (120 V TEST SWITCH), 3#14 (PEU).

61 COIL 50' FIBER OPTIC CABLE IN THE PULL BOX.

62 INSTALL No. 9 PULL BOX IN TYPE 60 BARRIER. SEE DETAIL ON SHEET E-46.

63 EXISTING 3"C. RC ALL CONDUCTORS. ADD 2#8 (240 V LIGHTING).

64 EXISTING 1½"C, 2#8 (240 V LIGHTING).

65 2"C, 2#6 (120 V rm/CAMERA STATION), 2#8 (240 V LIGHTING).

66 INSTALL LLLD SENSOR UNIT FOR 5-TURN DETECTOR LOOPS AS SHOWN ON THE PLAN.

67 2"C, 9#14, 1#10 (N), 4 DLC.

68 2"C, 4#6 (240 V LIGHTING CIRCUITS 1 AND 2).

69 2"C, 2#6 (240 V LIGHTING CIRCUIT 1).

70 2"C, 2#6 (240 V LIGHTING CIRCUIT 2).

71 2"C, 4#6 (240 V LIGHTING CIRCUITS 1 AND 2), 3#14 (PEU).

72 2"C, 3#1 (SERVICE).

73 INSTALL No. 5 PULL BOX. SC BY PG&E. COVER SHALL BE MARKED "CALTRANS/PG&E". THIS IS A PG&E TERMINATION POINT.

74 3"C, MT, DEPTH TO MEET PG&E REQUIREMENTS. COORDINATE WITH PG&E FOR SERVICE CONNECTION.

75 EXISTING 3-3"C, mt.

76 3"C, MT.

77 4-1½"C, MT FOR FUTURE FOC. SEE MDCS DETAIL A (TYPE B) ON SHEET E-50.

78 2"C, 9#14, 1#10 (N), 2#10 (240 V IRRIGATION), 4 DLC.

79 ADJUST EXISTING PULL BOX BY AT&T. COORDINATE WITH AT&T FOR PHONE SERVICE RECONNECTION.

80 EXISTING 1½"C, 2#8 (240 V SIGN ILLUMINATION), 3 dlc. RC 3 dlc. ADD 2#14 (TEST SWITCH), 3 DLC.

81 EXISTING 1½"C, 2 dlc. RC 2 dlc. ADD 2 DLC.

82 3"C, 2#6 (240 V RM), 2#8 (240 V IRRIGATION).

83 3"C, 2#6 (240 V RM), 2#8 (240 V IRRIGATION), 12 DLC.

84 EXISTING 2½"C, 2#6 (240 V RM), 2#10 (240 V IRRIGATION), 2 dlc. RC 2#10, 2 dlc. ADD 2#8 (240 V IRRIGATION), 2 DLC.

85 3"C, 1 HCC.

86 2"C, 2#10 (METER ON).

87 2"C, 2#10 (METER ON), 1 DLC.

88 EXISTING 1½"C, 2#10 (METER ON), 1 dlc. RC 1 dlc. ADD 1 DLC.

89 2"C, 3#14 (PEU).

90 EXISTING 2"C, 1 TELEPHONE SERVICE LINE.

91 2"C, 2#10 (240 V IRRIGATION).

92 2"C, STUB OUT FOR FUTURE IRRIGATION CONTROLLER CABINET.

93 INSTALL A 2 kVA 240 V TO 120 V STEP-DOWN SUBMERSIBLE TRANSFORMER INSIDE PULL BOX. INSTALL 10 A LINE-IN FUSE ON PRIMARY AND 20 A IN-LINE FUSE ON SECONDARY.

94 INSTALL ELECTROLIER ON RETAINING WALL. SEE DETAIL ON SHEET R-5.

95 EXISTING 2"C, 6#10 (RM), 1#10 (N), 2 dlc. RC 2 dlc. ADD 2 DLC.

96 INSTALL ELECTROLIER ON RETAINING WALL. SEE DETAIL ON SHEET C-26.

97 2"C, 2 DLC.

98 EXISTING 3"C, 2#2 (240 V rm/CAMERA STATION), 2#6 (240 V RM), 2#8 (240 V IRRIGATION), 2#10 (METER ON), 2 dlc. RC 2 dlc. ADD 2 DLC.

99 3"C, 2#2 (240 V rm/CAMERA STATION), 2#6 (240 V RM), 2#8 (240 V IRRIGATION), 2#10 (METER ON), 2 DLC.

100 3"C, 2#2 (240 V rm/CAMERA STATION), 2#6 (240 V RM), 2#8 (240 V IRRIGATION).

101 EXISTING 2"C, 1 hcc. RC 1 hcc. ADD 1 HCC.

102 INSTALL TYPE 1-B POLE (7') ON BARRIER. SEE DETAIL ON PLAN SHEET C-26.

103 2"C, 12#10, 1#10 (N), 12 DLC.

104 EXISTING 2-3"C, 2#6 (120 V rm/CAMERA STATION), 12#10, 1#10 (N), 2 hcc, 1 tc, 13 dlc. RC 12#10, 1#10, 2 hcc, 1 tc, 13 dlc. ADD 12#10, 1#10 (N), 2 HCC, 1 TC, 13 DLC.

105 EXISTING 2 kVA 240 V TO 120 V STEP-DOWN TRANSFORMER INSIDE PULL BOX.

106 RELOCATE EXISTING CAMERA STATION WITH INTEGRATED CAMERA UNIT AND CCTV 40 POLE.

107 EXISTING 2"C, 2#2 (240 TO 120 V STEP-DOWN TRANSFORMER FOR rm/CAMERA STATION), 2#6 (120 V rm/CAMERA STATION).

108 EXISTING 3"C, 2#2 (240 V rm/CAMERA STATION), 2#6 (240 V rm), 2#8 (240 V IRRIGATION), 2#10 (240 V IRRIGATION).

109 EXISTING 3"C, 2#2 (240 V rm/CAMERA STATION), 2#6 (240 V rm), 2#10 (METER ON), 2#8 (240 V IRRIGATION). RC 2#10.

110 3"C, 2#6 (120 V rm/CAMERA STATION), 2#8 (240 V LIGHTING), 3#14 (PEU).

111 3"C, 9#14, 1#10 (N), 2#10 (METER ON), 2#6 (120 V RM).
3"C, 18 DLC.

112 RC EXISTING PULL BOX. INSTALL NEW FIBER OPTIC PULL BOX. SEE DETAIL ON SHEET E-47.

113 EXISTING 2"C, 6#10, 1#10 (N), 10 dlc. RC 10 dlc. ADD 10 DLC.

114 EXISTING 2"C, 2 tc. RC 2 tc. ADD 1 TC.

115 2"C, 2#6 (120 V CAMERA STATION), 2#6 (120 V SIGNAL), 2#8 (240 V LIGHTING), 2#10 (120 V IRRIGATION), 3#14 (PEU).

116 2"C, 1 TC.

117 2"C, 3#4 (240 V CMS).

118 2"C, 3#4 (240 V CMS), 2#6 (120 V CMS CONTROLLER).

119 2"C, INSTALL STATE-FURNISHED #4 AND #5 HARNESS CABLES.

120 2"C, 2#6 (120 V CMS CONTROLLER).

121 EXISTING 1½"C, 2#10 (120 V IRRIGATION).

122 EXISTING 1½"C, 2#10 (120 V tdc).

123 EXISTING 2"C, 2 tc. RC 2 tc. ADD 2 TC.

124 EXISTING 1½"C, 2#6 (120 V TMS).

125 EXISTING 3"C, 8 dlc. ADD 4 dlc.
EXISTING 3"C, 6 dlc. ADD 4 dlc.

PROJECT NOTES

E-2

STATE OF CALIFORNIA - DEPARTMENT OF TRANSPORTATION
Caltrans

CONSULTANT FUNCTIONAL SUPERVISOR: TIMOTHY J. LEE
CALCULATED-DESIGNED BY: MENG YANG
CHECKED BY: DAN YAU
REVISED BY
DATE REVISED

LAST REVISION 11-18-11
DATE PLOTTED => 19-APR-2012
TIME PLOTTED => 13:31

Dist	COUNTY	ROUTE	POST MILES TOTAL PROJECT	SHEET No.	TOTAL SHEETS
04	Ala	880	22.6/24.0	489	760

REGISTERED CIVIL ENGINEER — DATE 11-18-11

4-16-12
PLANS APPROVAL DATE

REGISTERED PROFESSIONAL ENGINEER — KIN Y. CHAN No. 55391 Exp. 12/31/12 CIVIL — STATE OF CALIFORNIA

THE STATE OF CALIFORNIA OR ITS OFFICERS OR AGENTS SHALL NOT BE RESPONSIBLE FOR THE ACCURACY OR COMPLETENESS OF SCANNED COPIES OF THIS PLAN SHEET.

Y&C TRANSPORTATION CONSULTANTS, INC.
3250 Ramos Circle
Sacramento, CA 95827

ALAMEDA COUNTY CONGESTION MANAGEMENT AGENCY
1333 Broadway, Suite 220
Oakland, CA 94612

PROJECT NOTES:

126 SEE STRUCTURAL PLANS FOR CONDUIT LOCATION.

127 EXISTING 3"C, 2#6, 9#10, 3#8, 7 dlc. RC ALL CONDUCTOR/CABLES. ADD 2#6 (rm/CAMERA STATION), 9#10, 1#8 (N), 2#10 (METER ON), 6 DLC.

128 EXISTING 2"C, 2#6 (120 V tms).

129 EXISTING 3"C, 14 dlc.
EXISTING 3"C, 6 dlc. RC 6 dlc. ADD 8 DLC.

130 EXISTING 3"C, 8 dlc.
EXISTING 3"C, 6 dlc.
EXISTING 3"C, 6 dlc. RC 6 dlc. ADD 8 DLC.
EXISTING 3"C, mt.

131 INSTALL PULL BOX NEXT TO CONCRETE BARRIER.

132 3"C, 2#2 (240 V rm/CAMERA STATION), 2#6 (240 V RM), 2#8 (240 V IRRIGATION), 2#10 (METER ON).

133 2"C, 2#6 (120 V tms).

134 EXISTING 2-3"C, 2#6 (120 V tms), 18 dlc. RC 14 dlc. ADD 16 DLC.

135 EXISTING 3"C, 2#6 (120 V tms), 18 dlc. RC 2#6, 14 dlc. ADD 16 DLC.

136 EXISTING 2"C, 2 dlc, RC 2 dlc. ADD 2 DLC.

137 EXISTING 1½"C, 8 dlc. RC 8 dlc. ADD 8 DLC.

138 2"C, 2#14 (TEST SWITCH), 2#8 (240 V LIGHTING), 2#8 (240 V SIGN ILLUMINATION), 3 DLC.

139 RELOCATE EXISTING EMERGENCY VEHICLE DETECTOR FROM EXISTING sma TO NEW SIGNAL HEAD AS SHOWN.

140 EXISTING 2"C, 1 dlc. RC 1 dlc. ADD 1 DLC.

141 EXISTING 1½"C, 1 dlc. RC 1 dlc. ADD 1 DLC.

142 EXISTING 2"C, 2#10 (METER ON), 2 dlc. RC 2 dlc. ADD 2 DLC.

143 2"C, 2#10 (METER ON), 2 DLC.

144 INSTALL CONDUIT INSIDE BARRIER.

145 EXISTING 2"C, 1 hcc. RC 1 hcc. ADD 1 HCC.

146 3"C, 9#14, 1#10 (N), 2#10 (METER ON), 2#8 (240 V IRRIGATION), 6 DLC.

147 2"C, 2 TC.

148 EXISTING 3"C, 1 tc. RC 1 tc. ADD 1 TC.

149 2"C, 1 DLC.

150 EXISTING 2"C, 2#8 (240 V LIGHTING), 2#10 (120 V tdc), 3#14 (peu). REMOVE 2#8, 3#14.

151 2"C, 2#6 (120 V rm/CAMERA STATION), 2#6 (240 V LIGHTING), 2#10 (METER ON), 1 DLC.

152 EXISTING 2"C, 4 tc. RC 4 tc. ADD 3 TC.

153 3"C, 3 TC.

154 2"C, 6 DLC.

155 3"C, 9#14, 1#8 (N), 2#10 (METER ON), 5 DLC.

156 EXISTING 1½"C, 2#8 (240 V LIGHTING), 1 foc. RC 1 foc. ADD ONE 72-STRAND FOC.

157 2"C, 2#8 (240 V LIGHTING).

158 EXISTING 1½"C, 2#6 (120 V rm/CAMERA STATION), 2#6 (120 V tms).

159 EXISTING 3"C, 2#6 (rm/CAMERA STATION), 9#10, 3#8, 7 dlc. RC 9#10, 3#8, 7 dlc. ADD 9#10, 1#8 (N), 2#10 (METER ON), 6 DLC.

160 2"C, 2#8 (240 V LIGHTING), 3 DLC.

161 2"C, 2#10 (120 V TDC).

162 EXISTING 2-2"C, 1 tvl, 1 tvc, 1 tvp, 1 tvcp.
RC 1 tvl, 1 tvc, 1 tvp, t tvcp. ADD 1 HCC.

163 EXISTING 2-3"C, 9#14, 1#8, 2#10, 1 tc, 1 hcc, 6 dlc. RC ALL CONDUCTORS/CABLES. ADD 9#14, 2#8 (N), 2#10 (METER ON), 1 HCC, 5 DLC.

164 EXISTING 3"C, 8 dlc. RC 8 dlc. ADD 12 DLC.

165 COIL 100' FIBER OPTIC CABLE IN THE PULL BOX. COORDINATE WITH CITY OF SAN LEANDRO FOR FIBER OPTIC CABLE CONNECTION.

166 2"C, 2#14 (TEST SWITCH), 2#8 (240 V LIGHTING), 2#8 (240 V SIGN ILLUMINATION), 5 DLC.

167 EXISTING 2-3"C, 2 tvl, 2 tvc, 2 tvp. RC 2 tvl, 2 tvc, 2 tvp. ADD HCC.

168 EXISTING 2"C, 1 tc.

169 THE CONTRACTOR SHALL AVOID DAMAGING THE EXISTING CONDUITS DURING CONSTRUCTION OF MVP, AND REPLACE WITH NEW CONDUIT IF THEY ARE DAMAGED.

170 2"C, ONE 72-STRAND FOC.
2"C, MT.

171 EXISTING 2"C, 2 tc.

172 EXISTING 2"C, 2#6 (240 V RM), 2#10 (240 V IRRIGATION), 2 dlc. RC 2#10, 2 dlc. ADD 2#8 (240 V IRRIGATION), 2 DLC.

173 2"C, 2#6 (120 V CAMERA STATION), 2#6 (120 V SIGNAL), 2#10 (120 V TDC), 2#8 (240 V LIGHTING), 3#14 (PEU).

174 2"C, 2#6 (120 V CAMERA STATION), 2#6 (120 V SIGNAL), 2#8 (240 V LIGHTING), 3#14 (PEU).

175 2"C, 2#8 (240 V LIGHTING), 2 DLC.

176 3"C, 2#6 (480 V LIGHTING).

177 EXISTING 1½"C, 2#8, 2#14. RC 2#8, 2#14. ADD 1 PULL ROPE.

178 3"C, 9#10, 1#8 (N), 2#8 (METER ON), 6 DLC.

179 THIS ELECTRICAL WORK IS A PART OF BID ITEM PAID FOR BY "SIGNAL AND LIGHTING".

180 EXISTING 3"C, 4 dlc. RC 4 dlc. ADD 4 DLC.

181 2"C, 2#6 (120 V CAMERA STATION).

182 RS EXISTING SUBMERSIBLE STEP-DOWN TRANSFORMER FOR rm. EXISTING TRANSFORMER FOR IRRIGATION TO REMAIN.

183 3"C, 6#14, 1#8 (N), 2#10 (METER ON), 2 DLC.

184 EXISTING 1½"C, 1 tc. RC 1 tc. ADD 1 TC.

185 EXISTING 2-3"C. RC ALL CONDUCTORS/CABLES. ADD 2#6 (120 V rm/CAMERA STATION), 2#10 (METER ON), 9#14, 1#10 (N), 15 DLC, 1 HCC.

186 2"C, 9#14, 1#10 (N), 4 DLC.

187 2"C, 4 DLC.

188 2"C, 8 DLC.

189 EXISTING 2"C, foc. RC 1 foc. ADD ONE 72-STRAND FOC.

190 EXISTING 3"C, foc. RC 1 foc. ADD ONE 72-STRAND FOC.

191 DISCONNECT CITY OF SAN LEANDRO FIBER OPTIC CABLE AT THE SPLICE PULL BOX DURING STAGE CONSTRUCTION. SPLICE A NEW TO EXISTING FIBER OPTIC CABLE AFTER STAGE CONSTRUCTION. THE CONTRACTOR SHALL NOTIFY SAN LEANDRO PUBLIC WORKS DEPARTMENT AT (510) 577-6023 48 HOURS PRIOR TO FIBER OPTIC CABLE CONNECTION AND DISCONNECTION.

192 EXISTING 2"C, 2#6 (120 V CAMERA STATION), 2#6 (120 V SIGNAL), 2#10 (120 V tdc), 2#8 (240 V LIGHTING), 3#14 (peu). ADD 2#14 (TEST SWITCH).

193 INSTALL FIBER OPTIC PULL BOX. SEE DETAIL ON SHEET E-47.

194 INSTALL FIBER OPTIC VAULT. SEE DETAIL ON SHEET E-48.

195 ADD 1 STATE-FURNISHED DETECTOR SENSOR UNIT IN EXISTING CONTROLLER CABINET.

196 INSTALL CONDUIT UNDER THE SHOULDER, NEXT TO CONCRETE BARRIER.

197 DETECTOR LOOP SHALL BE 5-TURN.

198 EXISTING 1½"C, 1 TELEPHONE SERVICE LINE.

199 EXISTING 1½"C, 3 dlc. RC 3 dlc. ADD 3 DLC.

200 INSTALL No. 9 PULL BOX IN EXISTING TYPE 50 BARRIER. SEE DETAIL ON SHEET E-46.

201 RELOCATE EXISTING cctv FROM EXISTING SIGNAL STANDARD TO NEW SIGNAL STANDARD AS SHOWN. SEE DETAIL A ON SHEET E-39.

202 THIS IS A PART OF "FIBER OPTIC SYSTEM (CITY)" WORK.

203 EXISTING 2"C, 2#8 (240 V LIGHTING), 2 dlc, 1 foc. RC 2 dlc, 1 foc. ADD 2 DLC, ONE 72-STRAND FOC.

204 EXISTING 2"C, 2 dlc, 1 foc. RC 2 dlc, 1 foc. ADD 2 DLC, ONE 72-STRAND FOC.

205 EXISTING 2"C, 2#8, 2 dlc. RC 2 dlc. ADD 2 DLC.

206 EXISTING 2"C, mt.
EXISTING 2"C, 1 tc.
EXISTING 3"C, 2 tvl, 2 tvc, 2 tvp, 2 tvcp. RC 2 tvl, 2 tvc, 2 tvp, 2 tvcp. ADD 2 HCC.

207 EXISTING 2"C, 2#6 (120 V CAMERA STATION), 2#6 (120 V SIGNAL), 2#10 (120 V tdc), 2#8 (240 V LIGHTING), 3#14 (peu).

208 PULL OUT 1 evc FOR evda AND 3 dlc FOR 8J6L, 8J6U AND 8J7U FROM CONTROLLER CABINET TO THIS PULL BOX. REINSTALL 1 WITHDRAWN evc AND 3 WITHDRAWN dlc IN NEW/EXISTING CONDUITS AS SHOWN.

209 PULL OUT 1 sic FROM CONTROLLER CABINET TO THIS PULL BOX. REINSTALL 1 WITHDRAWN sic IN NEW/EXISTING CONDUITS AS SHOWN.

210 RC EXISTING MODEL 170 CONTROLLER ASSEMBLY. INSTALL STATE-FURNISHED MODEL 2070 CONTROLLER ASSEMBLY AND DETECTOR SENSOR UNITS FOR 1I5L, 1I5U, 8J8U. RE-DESIGNATE DETECTORS AS SHOWN.

211 2"C, 3#2. SEE SHEET E-34 FOR CONTINUATION.

212 INSTALL 6' x 10' TYPE D DETECTOR LOOP. SEE DETAIL ON SHEET E-44.

213 EXISTING 2-2"C, 1 tvl, 1 tvc, 1 tvp, 1 tvcp. RC 1 tvl, 1 tvc, 1 tvp, 1 tvcp. ADD 1 TVL, 1 TVC, 1 TVP, 1 TVCP.

214 EXISTING 2"C, 1 dlc. RC 1 dlc. ADD 2 DLC.

215 PULL BOX COVER SHALL BE MARKED "CITY TOS COMMUNICATIONS".

216 RC EXISTING PULL BOX. INSTALL No. 6 PULL BOX.

217 THE CONTRACTOR SHALL COORDINATE WITH THE ENGINEER TO OBTAIN THE CITY POLE NUMBER AND LABEL THE POLE AS DIRECTED BY THE ENGINEER.

218 SEE DETAIL A ON SHEET E-11 FOR POLE LOCATION.

219 SEE DETAIL B ON SHEET E-11 FOR POLE LOCATION.

220 SEE DETAIL C ON SHEET E-11 FOR POLE LOCATION.

221 EXISTING 2"C, 2#6 (120 V CAMERA STATION).

222 EXISTING 2"C, 2#6 (240 V rm), 2#6 (120 V rm), 2#10 (240 V IRRIGATION). RC 4#6, 2#8. ADD 2#8 (240 V IRRIGATION).

223 2"C, 2#6 (240 V LIGHTING).

224 2-3"C, 12#10, 1#10 (N), 1 HCC, 1 TC, 13 DLC.

PROJECT NOTES

E-3

REVISED BY	DATE REVISED
MENG YANG	DAN YAU
CALCULATED-DESIGNED BY	CHECKED BY
CONSULTANT FUNCTIONAL SUPERVISOR	TIMOTHY J. LEE

STATE OF CALIFORNIA - DEPARTMENT OF TRANSPORTATION
Caltrans

LAST REVISION 11-18-11 | DATE PLOTTED => 19-APR-2012 | TIME PLOTTED => 13:31

Dist	COUNTY	ROUTE	POST MILES TOTAL PROJECT	SHEET No.	TOTAL SHEETS
04	Ala	880	22.6/24.0	490	760

REGISTERED CIVIL ENGINEER — DATE: 11-18-11

4-16-12
PLANS APPROVAL DATE

REGISTERED PROFESSIONAL ENGINEER — KIN Y. CHAN — No. 55391 — Exp. 12/31/12 — CIVIL — STATE OF CALIFORNIA

THE STATE OF CALIFORNIA OR ITS OFFICERS OR AGENTS SHALL NOT BE RESPONSIBLE FOR THE ACCURACY OR COMPLETENESS OF SCANNED COPIES OF THIS PLAN SHEET.

Y&C TRANSPORTATION CONSULTANTS, INC.
3250 Ramos Circle
Sacramento, CA 95827

ALAMEDA COUNTY CONGESTION MANAGEMENT AGENCY
1333 Broadway, Suite 220
Oakland, CA 94612

NOTE:

FOR ACCURATE RIGHT OF WAY DATA, CONTACT RIGHT OF WAY ENGINEERING AT THE DISTRICT OFFICE.

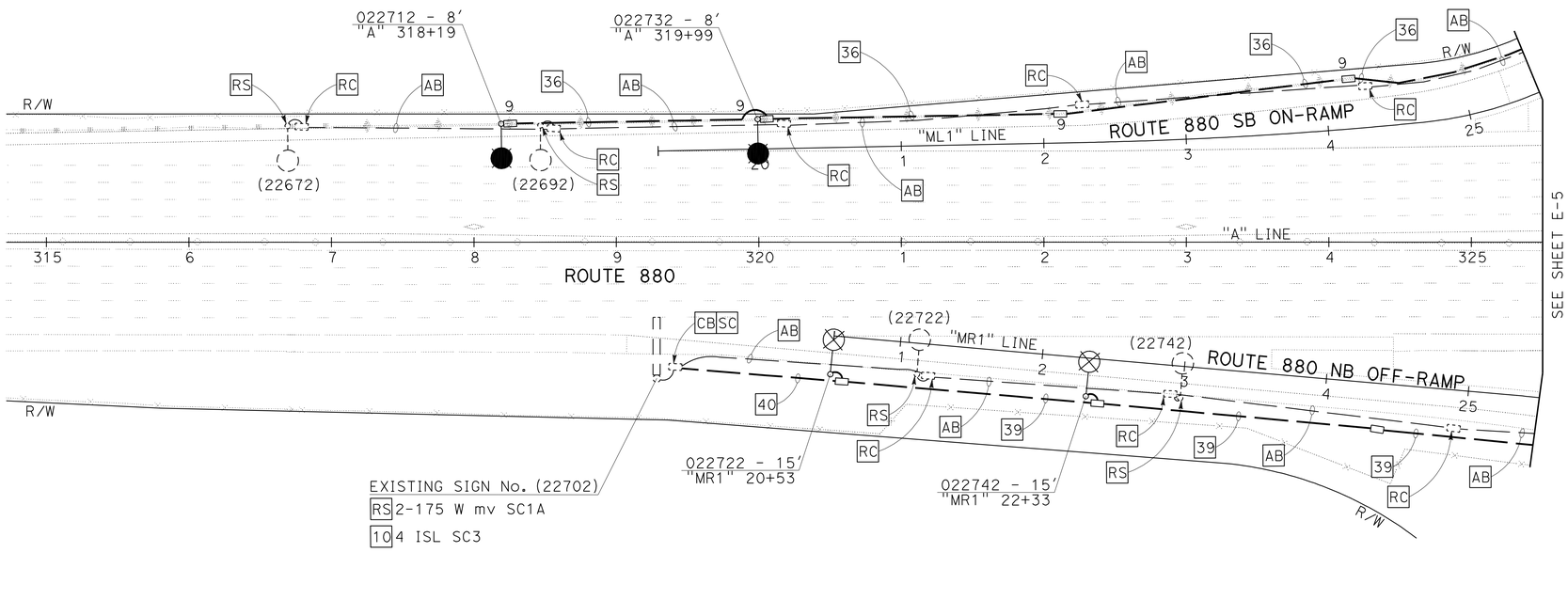

LIGHTING AND SIGN ILLUMINATION

SCALE: 1" = 50'

FOR NOTES, ABBREVIATIONS AND LEGEND, SEE SHEETS E-1 TO E-3

APPROVED FOR ELECTRICAL WORK ONLY

E-4

REVISED BY	DATE REVISED
MENG YANG	

CALCULATED-DESIGNED BY	CHECKED BY
DAN YAU	

CONSULTANT FUNCTIONAL SUPERVISOR: TIMOTHY J. LEE

STATE OF CALIFORNIA - DEPARTMENT OF TRANSPORTATION — Caltrans

LAST REVISION 11-18-11 | DATE PLOTTED => 19-APR-2012 | TIME PLOTTED => 13:31

Dist	COUNTY	ROUTE	POST MILES TOTAL PROJECT	SHEET No.	TOTAL SHEETS
04	Ala	880	22.6/24.0	491	760

REGISTERED CIVIL ENGINEER — DATE 11-18-11

4-16-12
PLANS APPROVAL DATE

REGISTERED PROFESSIONAL ENGINEER — KIN Y. CHAN No. 55391 Exp. 12/31/12 CIVIL — STATE OF CALIFORNIA

THE STATE OF CALIFORNIA OR ITS OFFICERS OR AGENTS SHALL NOT BE RESPONSIBLE FOR THE ACCURACY OR COMPLETENESS OF SCANNED COPIES OF THIS PLAN SHEET.

Y&C TRANSPORTATION CONSULTANTS, INC.
3250 Ramos Circle
Sacramento, CA 95827

ALAMEDA COUNTY CONGESTION MANAGEMENT AGENCY
1333 Broadway, Suite 220
Oakland, CA 94612

NOTE:

FOR COMPLETE RIGHT OF WAY DATA,
SEE RIGHT OF WAY RECORD MAPS AT DISTRICT OFFICE.

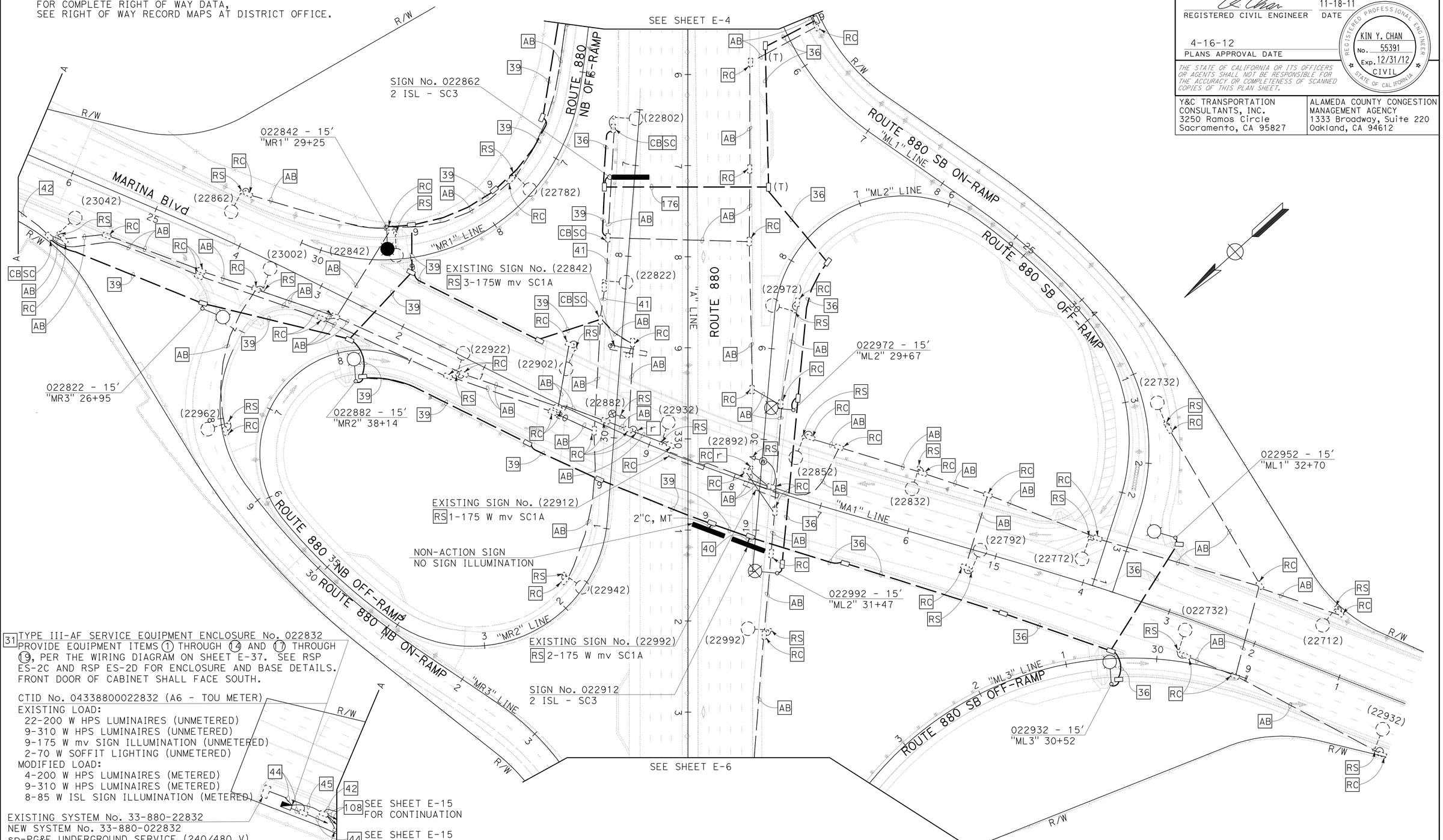

31 TYPE III-AF SERVICE EQUIPMENT ENCLOSURE No. 022832
PROVIDE EQUIPMENT ITEMS 1 THROUGH 14 AND 17 THROUGH 19, PER THE WIRING DIAGRAM ON SHEET E-37. SEE RSP ES-2C AND RSP ES-2D FOR ENCLOSURE AND BASE DETAILS. FRONT DOOR OF CABINET SHALL FACE SOUTH.

CTID No. 04338800022832 (A6 - TOU METER)
EXISTING LOAD:
22-200 W HPS LUMINAIRES (UNMETERED)
9-310 W HPS LUMINAIRES (UNMETERED)
9-175 W mv SIGN ILLUMINATION (UNMETERED)
2-70 W SOFFIT LIGHTING (UNMETERED)
MODIFIED LOAD:
4-200 W HPS LUMINAIRES (METERED)
9-310 W HPS LUMINAIRES (METERED)
8-85 W ISL SIGN ILLUMINATION (METERED)

EXISTING SYSTEM No. 33-880-22832
NEW SYSTEM No. 33-880-022832
sp-PG&E UNDERGROUND SERVICE (240/480 V)

EXISTING TYPE 1-B POLE WITH TWO PEU

108 SEE SHEET E-15 FOR CONTINUATION

44 SEE SHEET E-15 FOR CONTINUATION

FOR NOTES, ABBREVIATIONS AND LEGEND, SEE SHEETS E-1 TO E-3

APPROVED FOR ELECTRICAL WORK ONLY

LIGHTING AND SIGN ILLUMINATION

SCALE: 1" = 50'

E-5

STATE OF CALIFORNIA - DEPARTMENT OF TRANSPORTATION
Caltrans

CONSULTANT FUNCTIONAL SUPERVISOR: TIMOTHY J. LEE
CALCULATED-DESIGNED BY: MENG YANG
CHECKED BY: DAN YAU
REVISED BY
DATE REVISED

LAST REVISION 11-18-11
DATE PLOTTED => 19-APR-2012
TIME PLOTTED => 13:37

Dist	COUNTY	ROUTE	POST MILES TOTAL PROJECT	SHEET No.	TOTAL SHEETS
04	Ala	880	22.6/24.0	492	760

REGISTERED CIVIL ENGINEER — DATE: 11-18-11

4-16-12
PLANS APPROVAL DATE

REGISTERED PROFESSIONAL ENGINEER — KIN Y. CHAN — No. 55391 — Exp. 12/31/12 — CIVIL — STATE OF CALIFORNIA

THE STATE OF CALIFORNIA OR ITS OFFICERS OR AGENTS SHALL NOT BE RESPONSIBLE FOR THE ACCURACY OR COMPLETENESS OF SCANNED COPIES OF THIS PLAN SHEET.

Y&C TRANSPORTATION CONSULTANTS, INC.
3250 Ramos Circle
Sacramento, CA 95827

ALAMEDA COUNTY CONGESTION MANAGEMENT AGENCY
1333 Broadway, Suite 220
Oakland, CA 94612

NOTE:

FOR ACCURATE RIGHT OF WAY DATA, CONTACT RIGHT OF WAY ENGINEERING AT THE DISTRICT OFFICE.

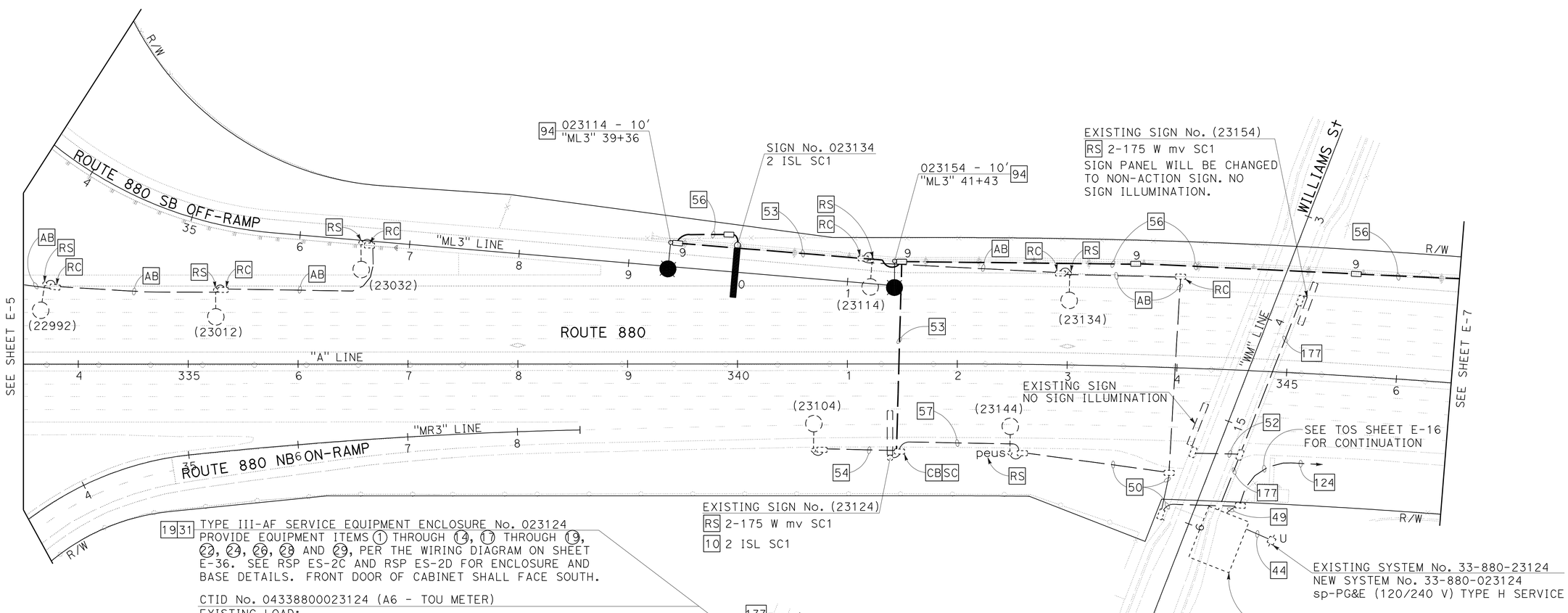

DETAIL A
SCALE: 1" = 20′

LIGHTING AND SIGN ILLUMINATION

SCALE: 1" = 50′

FOR NOTES, ABBREVIATIONS AND LEGEND, SEE SHEETS E-1 TO E-3

APPROVED FOR ELECTRICAL WORK ONLY

E-6

STATE OF CALIFORNIA - DEPARTMENT OF TRANSPORTATION — Caltrans

CONSULTANT FUNCTIONAL SUPERVISOR: TIMOTHY J. LEE

CALCULATED-DESIGNED BY: MENG YANG — CHECKED BY: DAN YAU — REVISED BY — DATE REVISED

LAST REVISION 11-18-11 — DATE PLOTTED => 19-APR-2012 — TIME PLOTTED => 13:35

Dist	COUNTY	ROUTE	POST MILES TOTAL PROJECT	SHEET No.	TOTAL SHEETS
04	Ala	880	22.6/24.0	493	760

REGISTERED CIVIL ENGINEER — DATE: 11-18-11

4-16-12
PLANS APPROVAL DATE

REGISTERED PROFESSIONAL ENGINEER — KIN Y. CHAN — No. 55391 — Exp. 12/31/12 — CIVIL — STATE OF CALIFORNIA

THE STATE OF CALIFORNIA OR ITS OFFICERS OR AGENTS SHALL NOT BE RESPONSIBLE FOR THE ACCURACY OR COMPLETENESS OF SCANNED COPIES OF THIS PLAN SHEET.

Y&C TRANSPORTATION CONSULTANTS, INC.
3250 Ramos Circle
Sacramento, CA 95827

ALAMEDA COUNTY CONGESTION MANAGEMENT AGENCY
1333 Broadway, Suite 220
Oakland, CA 94612

NOTE:

FOR ACCURATE RIGHT OF WAY DATA, CONTACT RIGHT OF WAY ENGINEERING AT THE DISTRICT OFFICE.

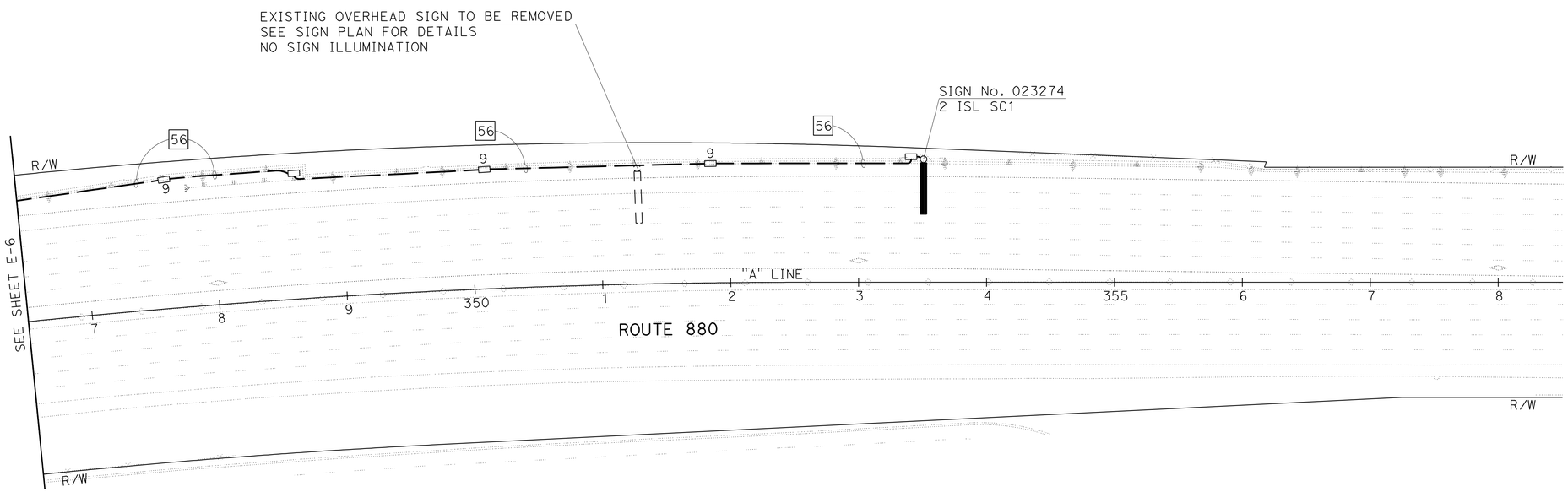

FOR NOTES, ABBREVIATIONS AND LEGEND, SEE SHEETS E-1 TO E-3

APPROVED FOR ELECTRICAL WORK ONLY

LIGHTING AND SIGN ILLUMINATION

SCALE: 1" = 50'

E-7

STATE OF CALIFORNIA - DEPARTMENT OF TRANSPORTATION
Caltrans

CONSULTANT FUNCTIONAL SUPERVISOR: TIMOTHY J. LEE
CALCULATED-DESIGNED BY: MENG YANG
CHECKED BY: DAN YAU
REVISED BY
DATE REVISED

LAST REVISION 11-18-11 — DATE PLOTTED => 19-APR-2012 — TIME PLOTTED => 13:35

Dist	COUNTY	ROUTE	POST MILES TOTAL PROJECT	SHEET No.	TOTAL SHEETS
04	Ala	880	22.6/24.0	494	760

REGISTERED CIVIL ENGINEER — DATE 11-18-11

4-16-12
PLANS APPROVAL DATE

REGISTERED PROFESSIONAL ENGINEER — KIN Y. CHAN — No. 55391 — Exp. 12/31/12 — CIVIL — STATE OF CALIFORNIA

THE STATE OF CALIFORNIA OR ITS OFFICERS OR AGENTS SHALL NOT BE RESPONSIBLE FOR THE ACCURACY OR COMPLETENESS OF SCANNED COPIES OF THIS PLAN SHEET.

Y&C TRANSPORTATION CONSULTANTS, INC.
3250 Ramos Circle
Sacramento, CA 95827

ALAMEDA COUNTY CONGESTION MANAGEMENT AGENCY
1333 Broadway, Suite 220
Oakland, CA 94612

NOTE:

FOR ACCURATE RIGHT OF WAY DATA, CONTACT RIGHT OF WAY ENGINEERING AT THE DISTRICT OFFICE.

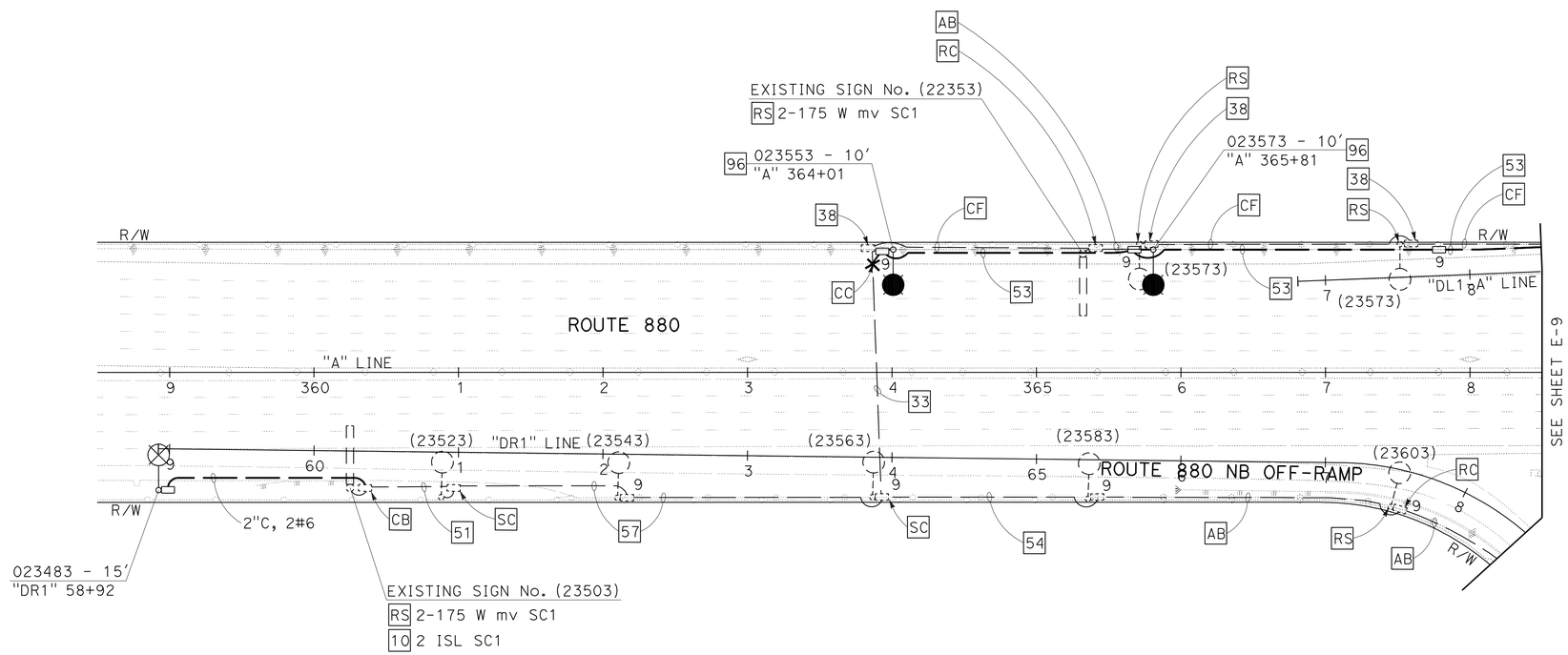

FOR NOTES, ABBREVIATIONS AND LEGEND, SEE SHEETS E-1 TO E-3

APPROVED FOR ELECTRICAL WORK ONLY

LIGHTING AND SIGN ILLUMINATION

SCALE: 1" = 50'

E-8

STATE OF CALIFORNIA - DEPARTMENT OF TRANSPORTATION — Caltrans

CONSULTANT FUNCTIONAL SUPERVISOR: TIMOTHY J. LEE

CALCULATED-DESIGNED BY: MENG YANG — CHECKED BY: DAN YAU

REVISED BY — DATE REVISED

LAST REVISION 11-18-11 — DATE PLOTTED => 19-APR-2012 — TIME PLOTTED => 13:35

Dist	COUNTY	ROUTE	POST MILES TOTAL PROJECT	SHEET No.	TOTAL SHEETS
04	Ala	880	22.6/24.0	495	760

REGISTERED CIVIL ENGINEER — DATE 11-18-11

4-16-12
PLANS APPROVAL DATE

REGISTERED PROFESSIONAL ENGINEER — KIN Y. CHAN — No. 55391 — Exp. 12/31/12 — CIVIL — STATE OF CALIFORNIA

THE STATE OF CALIFORNIA OR ITS OFFICERS OR AGENTS SHALL NOT BE RESPONSIBLE FOR THE ACCURACY OR COMPLETENESS OF SCANNED COPIES OF THIS PLAN SHEET.

Y&C TRANSPORTATION CONSULTANTS, INC.
3250 Ramos Circle
Sacramento, CA 95827

ALAMEDA COUNTY CONGESTION MANAGEMENT AGENCY
1333 Broadway, Suite 220
Oakland, CA 94612

NOTE:

FOR ACCURATE RIGHT OF WAY DATA, CONTACT RIGHT OF WAY ENGINEERING AT THE DISTRICT OFFICE.

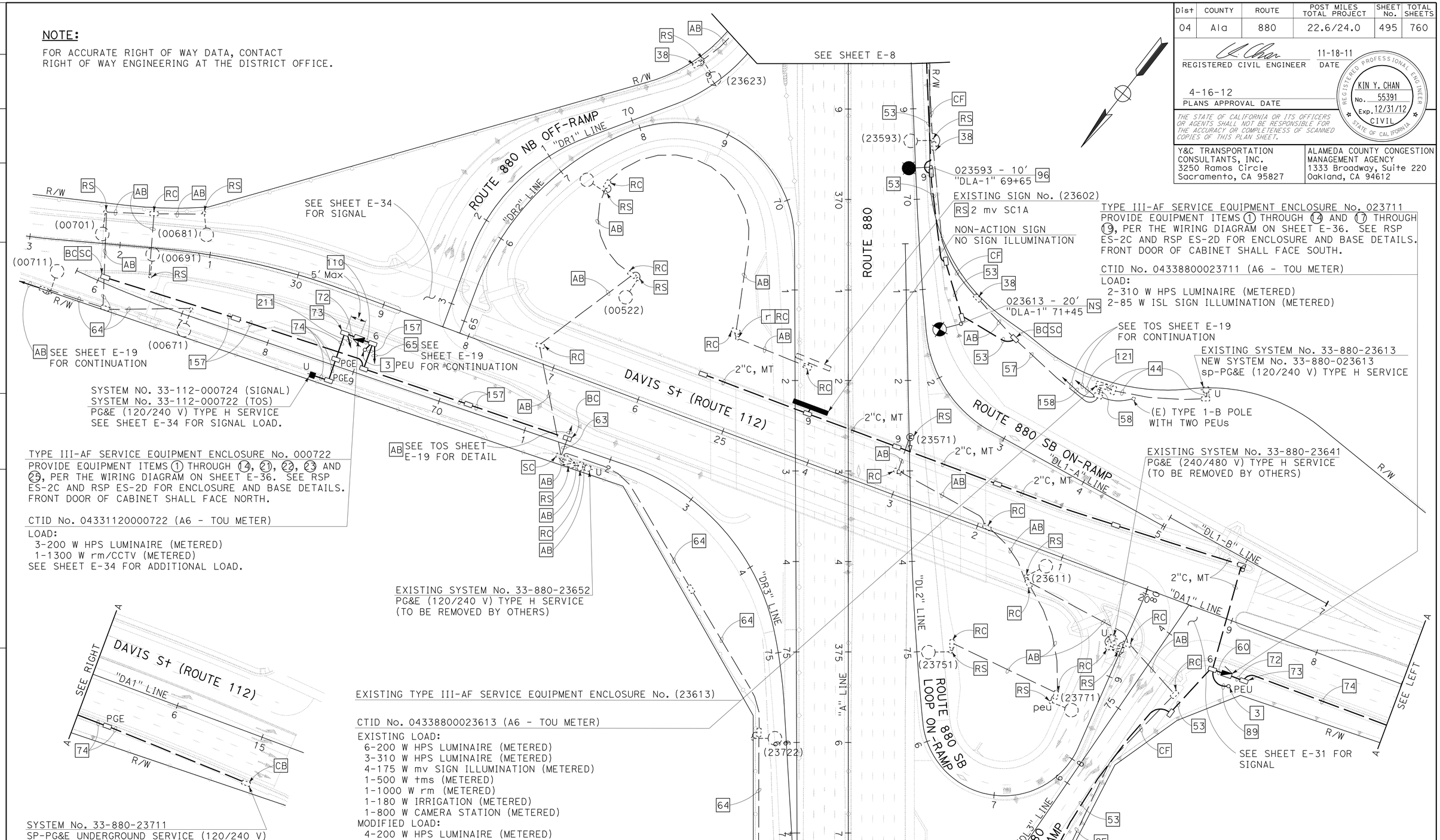

TYPE III-AF SERVICE EQUIPMENT ENCLOSURE No. 000722
PROVIDE EQUIPMENT ITEMS 1 THROUGH 14, 21, 22, 23 AND 25, PER THE WIRING DIAGRAM ON SHEET E-36. SEE RSP ES-2C AND RSP ES-2D FOR ENCLOSURE AND BASE DETAILS. FRONT DOOR OF CABINET SHALL FACE NORTH.

CTID No. 04331120000722 (A6 - TOU METER)
LOAD:
3-200 W HPS LUMINAIRE (METERED)
1-1300 W rm/CCTV (METERED)
SEE SHEET E-34 FOR ADDITIONAL LOAD.

TYPE III-AF SERVICE EQUIPMENT ENCLOSURE No. 023711
PROVIDE EQUIPMENT ITEMS 1 THROUGH 14 AND 17 THROUGH 19, PER THE WIRING DIAGRAM ON SHEET E-36. SEE RSP ES-2C AND RSP ES-2D FOR ENCLOSURE AND BASE DETAILS. FRONT DOOR OF CABINET SHALL FACE SOUTH.

CTID No. 04338800023711 (A6 - TOU METER)
LOAD:
2-310 W HPS LUMINAIRE (METERED)
2-85 W ISL SIGN ILLUMINATION (METERED)

LIGHTING AND SIGN ILLUMINATION

SCALE: 1" = 50'

E-9

APPROVED FOR ELECTRICAL WORK ONLY

FOR NOTES, ABBREVIATIONS AND LEGEND, SEE SHEETS E-1 TO E-3

STATE OF CALIFORNIA - DEPARTMENT OF TRANSPORTATION — Caltrans

CONSULTANT FUNCTIONAL SUPERVISOR: TIMOTHY J. LEE

CALCULATED-DESIGNED BY: MENG YANG — CHECKED BY: DAN YAU — REVISED BY — DATE REVISED

LAST REVISION 11-18-11 — DATE PLOTTED => 19-APR-2012 — TIME PLOTTED => 13:41

Dist	COUNTY	ROUTE	POST MILES TOTAL PROJECT	SHEET No.	TOTAL SHEETS
04	Ala	880	22.6/24.0	496	760

REGISTERED CIVIL ENGINEER — DATE 11-18-11

4-16-12
PLANS APPROVAL DATE

REGISTERED PROFESSIONAL ENGINEER — KIN Y. CHAN — No. 55391 — Exp. 12/31/12 — CIVIL — STATE OF CALIFORNIA

THE STATE OF CALIFORNIA OR ITS OFFICERS OR AGENTS SHALL NOT BE RESPONSIBLE FOR THE ACCURACY OR COMPLETENESS OF SCANNED COPIES OF THIS PLAN SHEET.

Y&C TRANSPORTATION CONSULTANTS, INC.
3250 Ramos Circle
Sacramento, CA 95827

ALAMEDA COUNTY CONGESTION MANAGEMENT AGENCY
1333 Broadway, Suite 220
Oakland, CA 94612

NOTE:

FOR ACCURATE RIGHT OF WAY DATA, CONTACT RIGHT OF WAY ENGINEERING AT THE DISTRICT OFFICE.

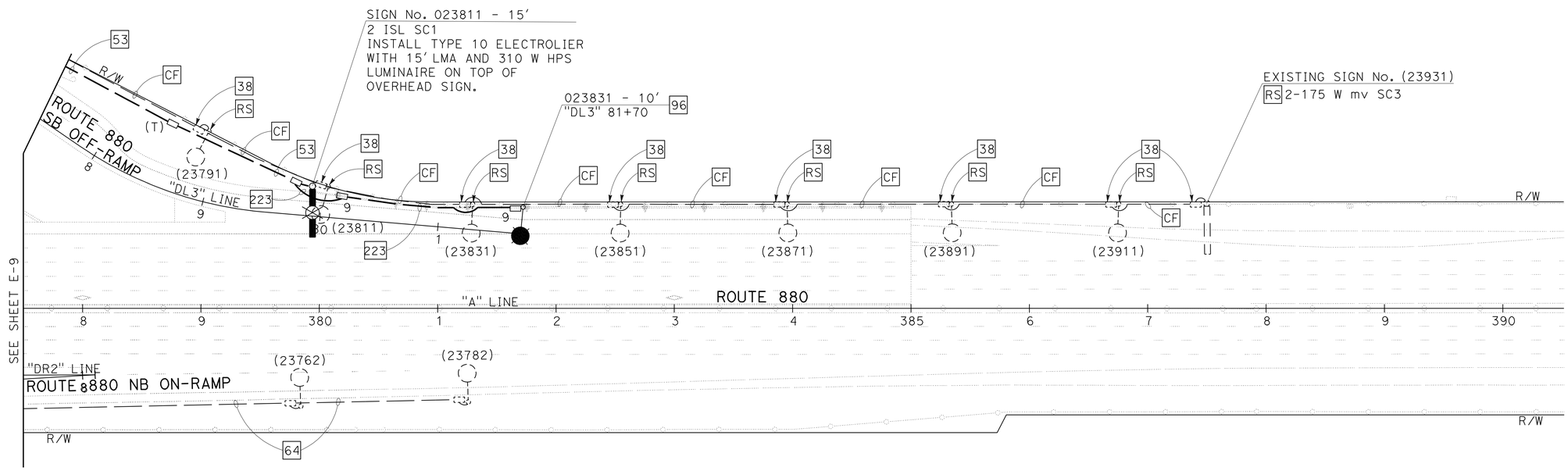

FOR NOTES, ABBREVIATIONS AND LEGEND, SEE SHEETS E-1 TO E-3

APPROVED FOR ELECTRICAL WORK ONLY

LIGHTING AND SIGN ILLUMINATION

SCALE: 1" = 50'

E-10

STATE OF CALIFORNIA - DEPARTMENT OF TRANSPORTATION
Caltrans

CONSULTANT FUNCTIONAL SUPERVISOR: TIMOTHY J. LEE
CALCULATED-DESIGNED BY: DAN YAU
CHECKED BY: MENG YANG
REVISED BY
DATE REVISED

LAST REVISION 11-18-11
DATE PLOTTED => 19-APR-2012
TIME PLOTTED => 13:35

Dist	COUNTY	ROUTE	POST MILES TOTAL PROJECT	SHEET No.	TOTAL SHEETS
04	Ala	880	22.6/24.0	497	760

REGISTERED CIVIL ENGINEER — DATE: 11-18-11

4-16-12
PLANS APPROVAL DATE

REGISTERED PROFESSIONAL ENGINEER — KIN Y. CHAN — No. 55391 — Exp. 12/31/12 — CIVIL — STATE OF CALIFORNIA

THE STATE OF CALIFORNIA OR ITS OFFICERS OR AGENTS SHALL NOT BE RESPONSIBLE FOR THE ACCURACY OR COMPLETENESS OF SCANNED COPIES OF THIS PLAN SHEET.

Y&C TRANSPORTATION CONSULTANTS, INC.
3250 Ramos Circle
Sacramento, CA 95827

ALAMEDA COUNTY CONGESTION MANAGEMENT AGENCY
1333 Broadway, Suite 220
Oakland, CA 94612

NOTE:

FOR ACCURATE RIGHT OF WAY DATA, CONTACT RIGHT OF WAY ENGINEERING AT THE DISTRICT OFFICE.

NOTE: (FOR SHEETS E-11 TO E-13 ONLY)

1. PULL BOXES SHALL BE CHRISTY No. 3 1/2, REINFORCED CONCRETE WITH BOLT DOWN LID UNLESS OTHERWISE NOTED ON THE PLAN. PULL BOX COVERS SHALL BE MARKED "CITY STREET LIGHTING".

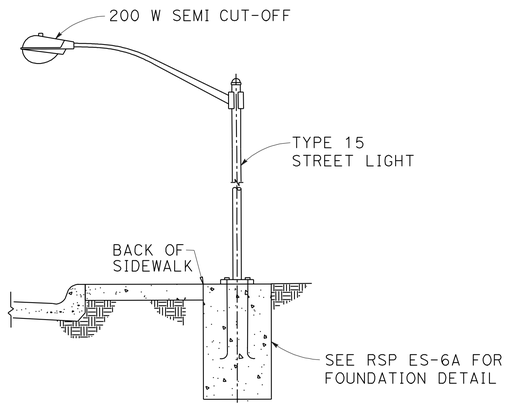

DETAIL A
STREET LIGHT POLE LOCATION
NO SCALE

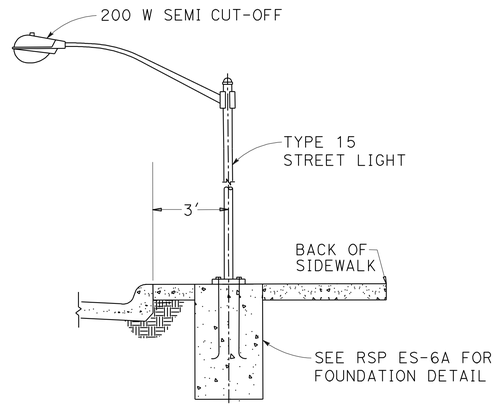

DETAIL B
STREET LIGHT POLE LOCATION
NO SCALE

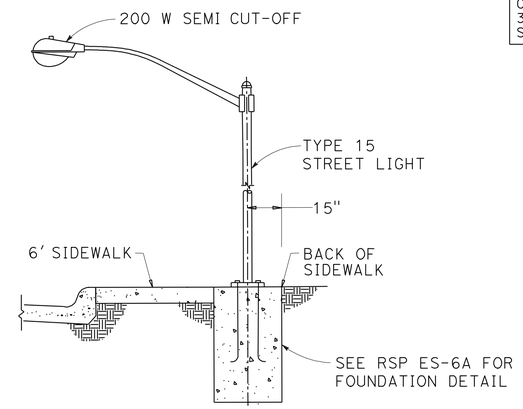

DETAIL C
STREET LIGHT POLE LOCATION
NO SCALE

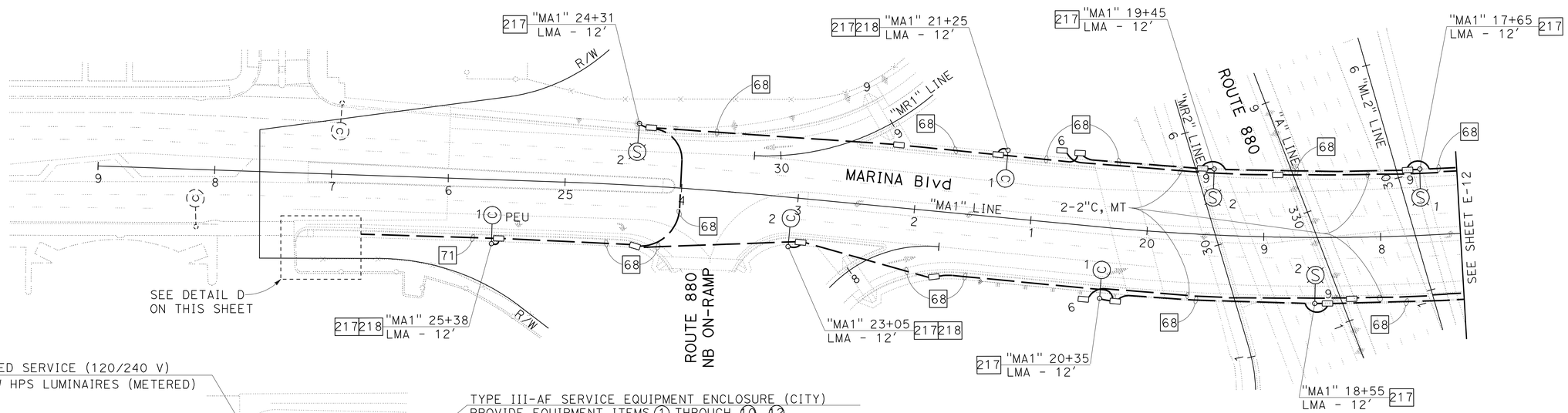

PG&E PAD-MOUNTED SERVICE (120/240 V)
LOAD: 14 -200 W HPS LUMINAIRES (METERED)

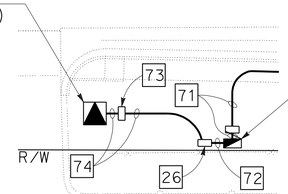

DETAIL D
SCALE: 1" = 20'

TYPE III-AF SERVICE EQUIPMENT ENCLOSURE (CITY)
PROVIDE EQUIPMENT ITEMS 1 THROUGH 10, 12, AND 14 THROUGH 19, PER THE WIRING DIAGRAM ON SHEET E-36. ALSO SEE RSP ES-2C FOR OTHER DETAILS. FRONT DOOR OF CABINET SHALL FACE SOUTH.

FOR NOTES, ABBREVIATIONS AND LEGEND, SEE SHEETS E-1 TO E-3

LIGHTING
(CITY STREET)
SCALE: 1" = 50'

E-11

APPROVED FOR ELECTRICAL WORK ONLY

STATE OF CALIFORNIA - DEPARTMENT OF TRANSPORTATION — Caltrans

CONSULTANT FUNCTIONAL SUPERVISOR: TIMOTHY J. LEE

CALCULATED-DESIGNED BY: MENG YANG — CHECKED BY: DAN YAU

REVISED BY — DATE REVISED

LAST REVISION 11-18-11 — DATE PLOTTED => 19-APR-2012 — TIME PLOTTED => 15:03

Dist	COUNTY	ROUTE	POST MILES TOTAL PROJECT	SHEET No.	TOTAL SHEETS
04	Ala	880	22.6/24.0	498	760

REGISTERED CIVIL ENGINEER — DATE 11-18-11

4-16-12
PLANS APPROVAL DATE

REGISTERED PROFESSIONAL ENGINEER — KIN Y. CHAN — No. 55391 — Exp. 12/31/12 — CIVIL — STATE OF CALIFORNIA

THE STATE OF CALIFORNIA OR ITS OFFICERS OR AGENTS SHALL NOT BE RESPONSIBLE FOR THE ACCURACY OR COMPLETENESS OF SCANNED COPIES OF THIS PLAN SHEET.

Y&C TRANSPORTATION CONSULTANTS, INC.
3250 Ramos Circle
Sacramento, CA 95827

ALAMEDA COUNTY CONGESTION MANAGEMENT AGENCY
1333 Broadway, Suite 220
Oakland, CA 94612

NOTE:

FOR ACCURATE RIGHT OF WAY DATA, CONTACT RIGHT OF WAY ENGINEERING AT THE DISTRICT OFFICE.

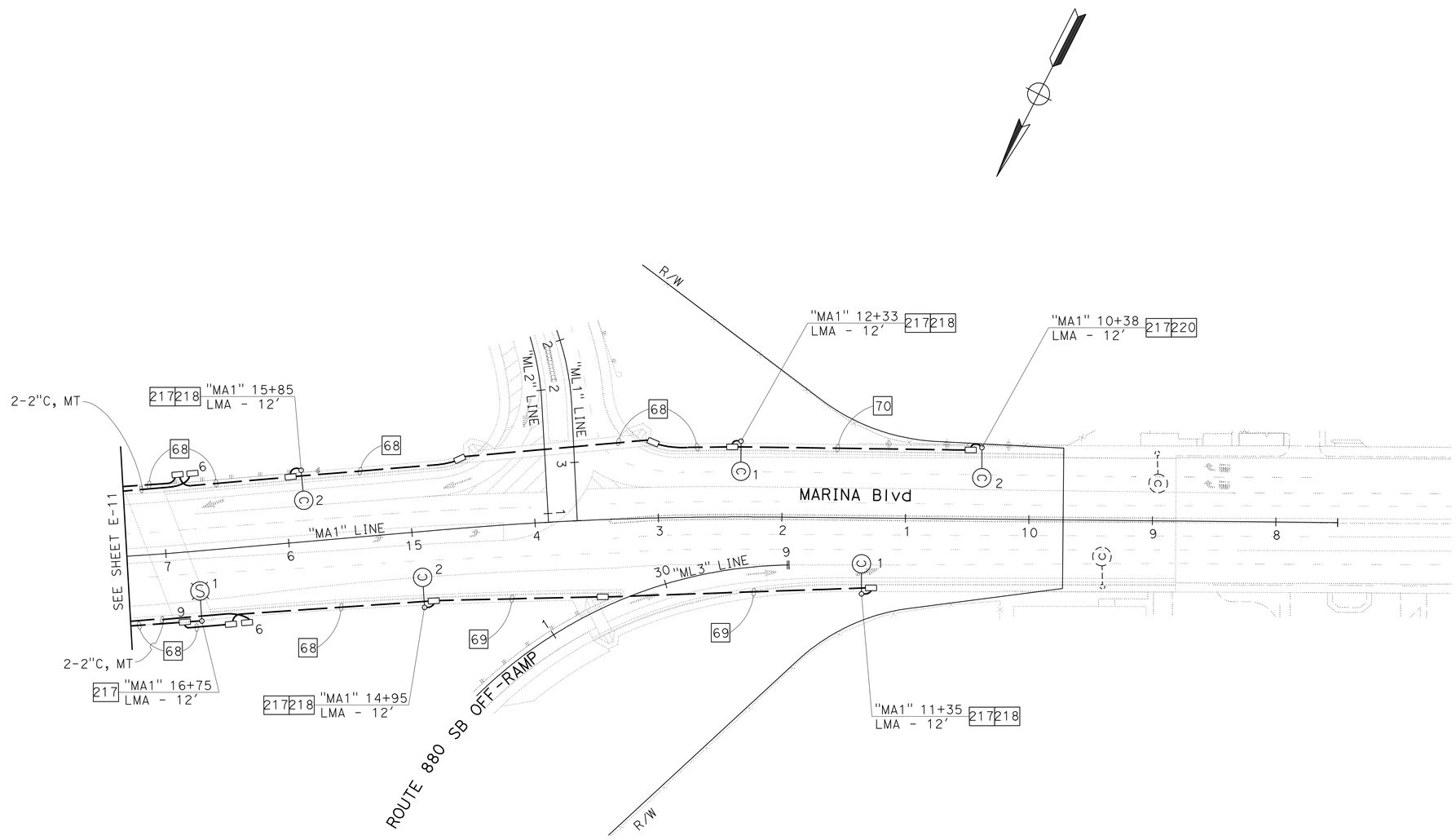

LIGHTING
(CITY STREET)

SCALE: 1" = 50'

E-12

FOR NOTES, ABBREVIATIONS AND LEGEND, SEE SHEETS E-1 TO E-3

APPROVED FOR ELECTRICAL WORK ONLY

STATE OF CALIFORNIA - DEPARTMENT OF TRANSPORTATION
Caltrans

CONSULTANT FUNCTIONAL SUPERVISOR: TIMOTHY J. LEE

CALCULATED-DESIGNED BY: MENG YANG
CHECKED BY: DAN YAU

REVISED BY
DATE REVISED

LAST REVISION 11-18-11 | DATE PLOTTED => 19-APR-2012 | TIME PLOTTED => 15:03

Dist	COUNTY	ROUTE	POST MILES TOTAL PROJECT	SHEET No.	TOTAL SHEETS
04	Ala	880	22.6/24.0	499	760

REGISTERED CIVIL ENGINEER — DATE 11-18-11

4-16-12
PLANS APPROVAL DATE

REGISTERED PROFESSIONAL ENGINEER — KIN Y. CHAN — No. 55391 — Exp. 12/31/12 — CIVIL — STATE OF CALIFORNIA

THE STATE OF CALIFORNIA OR ITS OFFICERS OR AGENTS SHALL NOT BE RESPONSIBLE FOR THE ACCURACY OR COMPLETENESS OF SCANNED COPIES OF THIS PLAN SHEET.

Y&C TRANSPORTATION CONSULTANTS, INC.
3250 Ramos Circle
Sacramento, CA 95827

ALAMEDA COUNTY CONGESTION MANAGEMENT AGENCY
1333 Broadway, Suite 220
Oakland, CA 94612

NOTE:

FOR ACCURATE RIGHT OF WAY DATA, CONTACT RIGHT OF WAY ENGINEERING AT THE DISTRICT OFFICE.

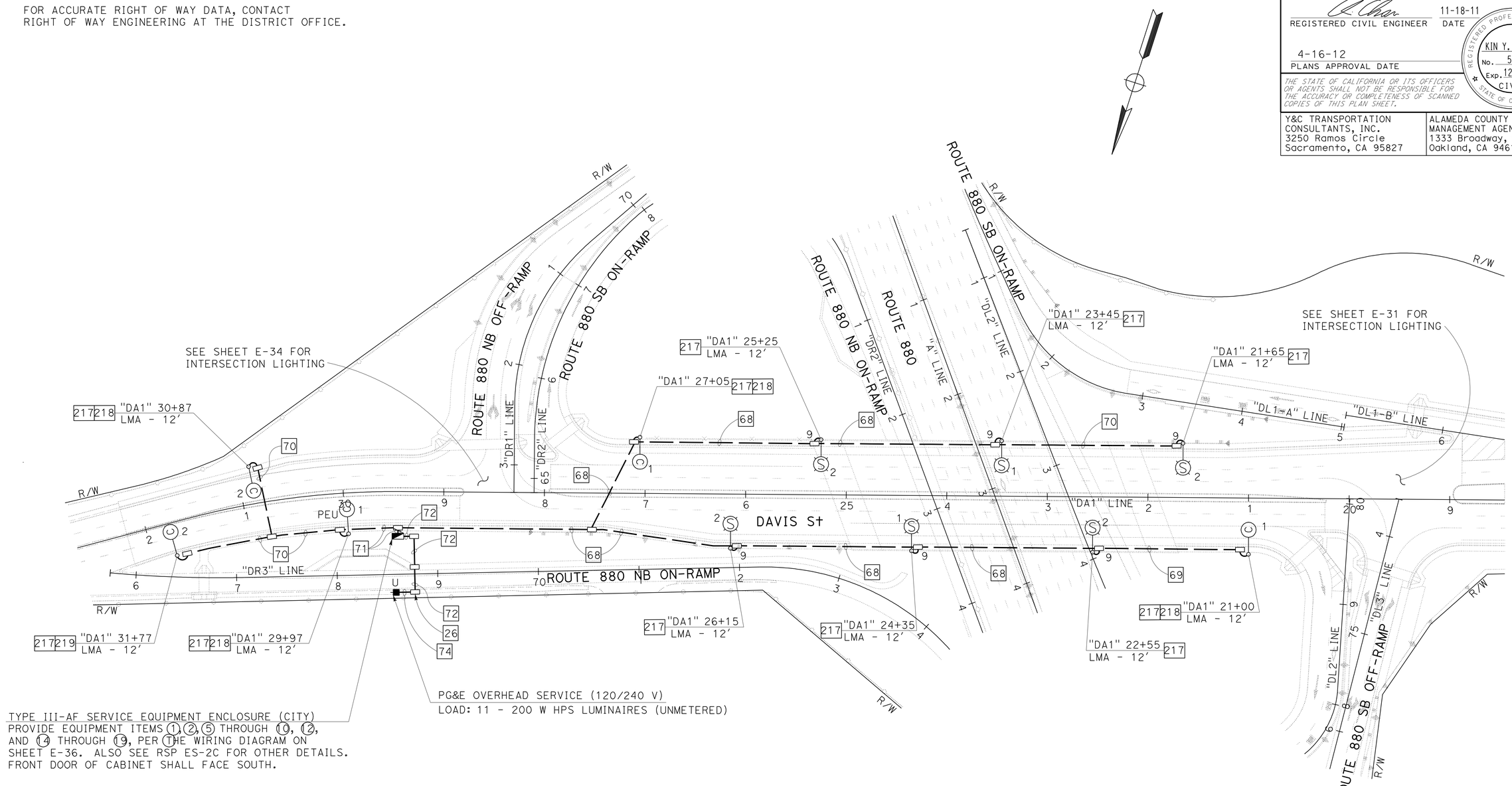

LIGHTING
(CITY STREET)
SCALE: 1" = 50'

E-13

FOR NOTES, ABBREVIATIONS AND LEGEND, SEE SHEETS E-1 TO E-3

APPROVED FOR ELECTRICAL WORK ONLY

STATE OF CALIFORNIA - DEPARTMENT OF TRANSPORTATION — Caltrans

CONSULTANT FUNCTIONAL SUPERVISOR: TIMOTHY J. LEE

CALCULATED-DESIGNED BY: MENG YANG — CHECKED BY: DAN YAU — REVISED BY — DATE REVISED

LAST REVISION 11-18-11 — DATE PLOTTED => 19-APR-2012 — TIME PLOTTED => 15:03

Dist	COUNTY	ROUTE	POST MILES TOTAL PROJECT	SHEET No.	TOTAL SHEETS
04	Ala	880	22.6/24.0	500	760

REGISTERED CIVIL ENGINEER — DATE 11-18-11

4-16-12
PLANS APPROVAL DATE

REGISTERED PROFESSIONAL ENGINEER — KIN Y. CHAN No. 55391 Exp. 12/31/12 CIVIL — STATE OF CALIFORNIA

THE STATE OF CALIFORNIA OR ITS OFFICERS OR AGENTS SHALL NOT BE RESPONSIBLE FOR THE ACCURACY OR COMPLETENESS OF SCANNED COPIES OF THIS PLAN SHEET.

Y&C TRANSPORTATION CONSULTANTS, INC.
3250 Ramos Circle
Sacramento, CA 95827

ALAMEDA COUNTY CONGESTION MANAGEMENT AGENCY
1333 Broadway, Suite 220
Oakland, CA 94612

NOTE:

FOR ACCURATE RIGHT OF WAY DATA, CONTACT RIGHT OF WAY ENGINEERING AT THE DISTRICT OFFICE.

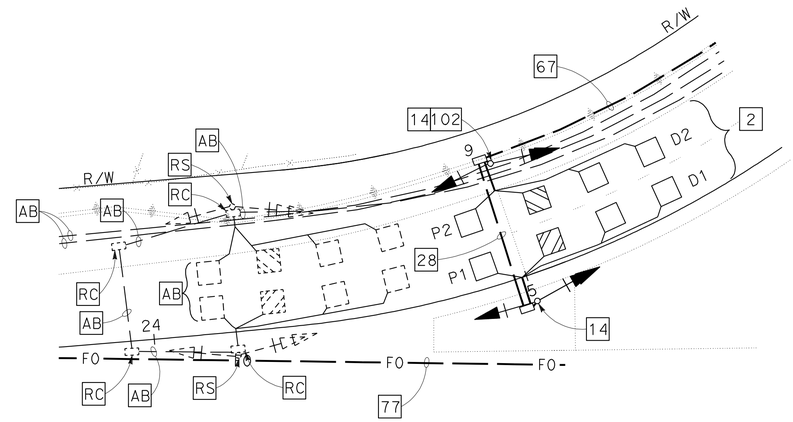

DETAIL A
SCALE: 1" = 20'

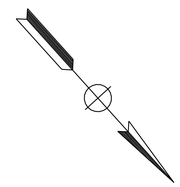

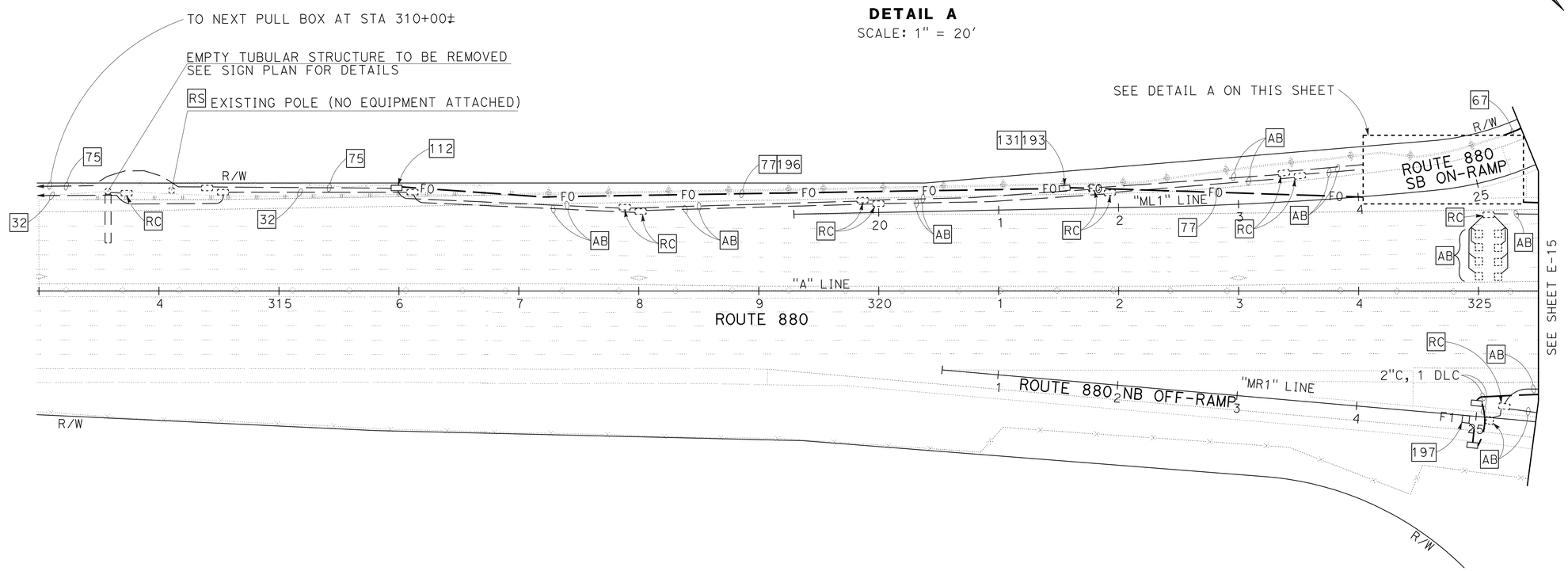

TRAFFIC OPERATIONS SYSTEM
SCALE: 1" = 50'

FOR NOTES, ABBREVIATIONS AND LEGEND, SEE SHEETS E-1 TO E-3

APPROVED FOR ELECTRICAL WORK ONLY

E-14

STATE OF CALIFORNIA - DEPARTMENT OF TRANSPORTATION
Caltrans

CONSULTANT FUNCTIONAL SUPERVISOR: TIMOTHY J. LEE
CALCULATED-DESIGNED BY: MENG YANG
CHECKED BY: DAN YAU
REVISED BY
DATE REVISED

LAST REVISION: DATE PLOTTED => 19-APR-2012 TIME PLOTTED => 15:03
11-18-11