HSNH-P152(075)E

Dist	COUNTY	ROUTE	POST MILES TOTAL PROJECT	SHEET No.	TOTAL SHEETS
04	SCI	152	19.3/20.3	1	39

STATE OF CALIFORNIA
DEPARTMENT OF TRANSPORTATION

PROJECT PLANS FOR CONSTRUCTION ON
STATE HIGHWAY

IN SANTA CLARA COUNTY
NEAR GILROY
FROM HOLSTEIN CREEK BRIDGE
TO 1.0 MILE EAST OF HOLSTEIN CREEK BRIDGE

TO BE SUPPLEMENTED BY STANDARD PLANS DATED MAY 2006

INDEX OF PLANS

SHEET No.	DESCRIPTION
1	TITLE AND LOCATION MAP
2	TYPICAL CROSS SECTIONS
3-4	LAYOUTS
5-6	PROFILES AND SUPERELEVATION DIAGRAMS
7	CONSTRUCTION DETAILS
8-10	EROSION CONTROL PLANS, DETAILS AND QUANTITIES
11-18	DRAINAGE PLANS, PROFILES, DETAILS AND QUANTITIES
19-20	UTILITY PLANS
21	CONSTRUCTION AREA SIGNS
22-23	STAGE CONSTRUCTION PLANS
24-26	PAVEMENT DELINEATION PLANS AND QUANTITIES
27-28	SIGN PLANS AND QUANTITIES
29	SUMMARY OF QUANTITIES
30-39	REVISED AND NEW STANDARD PLANS

THE STANDARD PLANS LIST APPLICABLE TO THIS CONTRACT IS INCLUDED IN THE NOTICE TO BIDDERS AND SPECIAL PROVISIONS BOOK.

LOCATION MAP

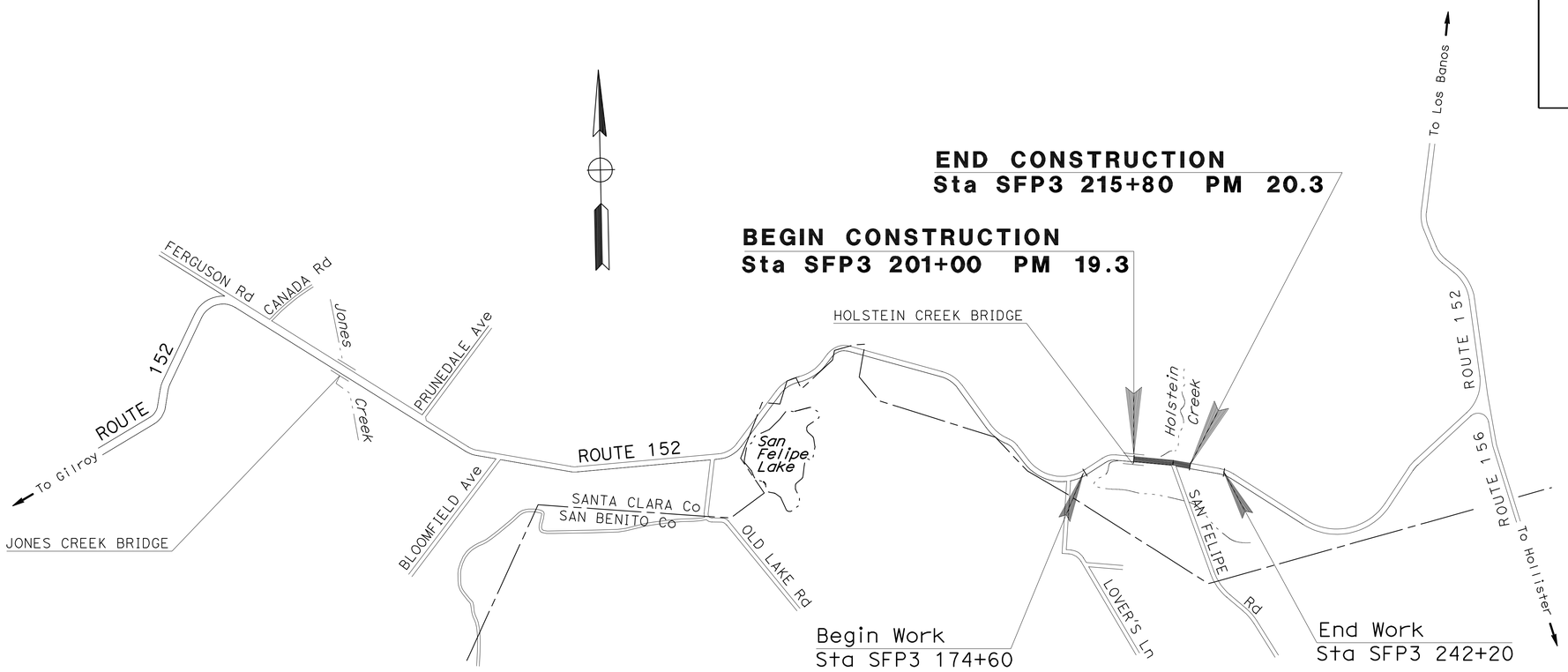

NO SCALE

PROJECT MANAGER: FARIBA ZOHOURY

DESIGN ENGINEER: MORTEZA AZIMI

Parviz Abedi 5-28-09
PROJECT ENGINEER REGISTERED CIVIL ENGINEER — DATE

January 24, 2011
PLANS APPROVAL DATE

REGISTERED PROFESSIONAL ENGINEER — P. Abedi — No. 36025 — Exp. 6-30-10 — CIVIL — STATE OF CALIFORNIA

THE STATE OF CALIFORNIA OR ITS OFFICERS OR AGENTS SHALL NOT BE RESPONSIBLE FOR THE ACCURACY OR COMPLETENESS OF SCANNED COPIES OF THIS PLAN SHEET.

THE CONTRACTOR SHALL POSSESS THE CLASS (OR CLASSES) OF LICENSE AS SPECIFIED IN THE "NOTICE TO BIDDERS."

CONTRACT No.	04-3A4004
PROJECT ID	0400000938

LAST REVISION 05-30-09 — DATE PLOTTED => 31-JAN-2011 — TIME PLOTTED => 13:03

Dist	COUNTY	ROUTE	POST MILES TOTAL PROJECT	SHEET No.	TOTAL SHEETS
04	SCI	152	19.3/20.3	2	39

Parrirokh Abedi 5-28-09
REGISTERED CIVIL ENGINEER DATE

1-24-11
PLANS APPROVAL DATE

REGISTERED PROFESSIONAL ENGINEER
P. Abedi
No. 36025
Exp 6-30-12
CIVIL
STATE OF CALIFORNIA

THE STATE OF CALIFORNIA OR ITS OFFICERS OR AGENTS SHALL NOT BE RESPONSIBLE FOR THE ACCURACY OR COMPLETENESS OF SCANNED COPIES OF THIS PLAN SHEET.

NOTES:

1. DIMENSIONS OF THE STRUCTURAL SECTIONS ARE SUBJECT TO TOLERANCES SPECIFIED IN THE STANDARD SPECIFICATIONS.
2. SUPERELEVATION AS SHOWN OR AS DIRECTED BY THE ENGINEER.

LEGEND:

- [No.] STRUCTURAL SECTION NUMBER
- [1] 1.5′ HMA (TYPE A)
- [2] 0.15 HMA (TYPE A)

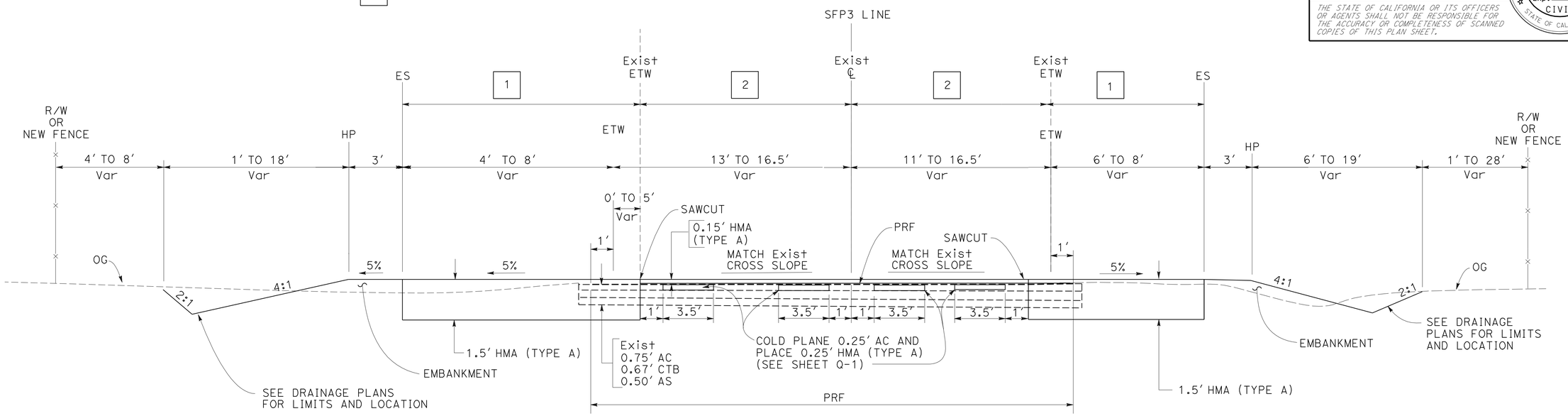

ROUTE 152

SFP3 201+00 TO 205+80

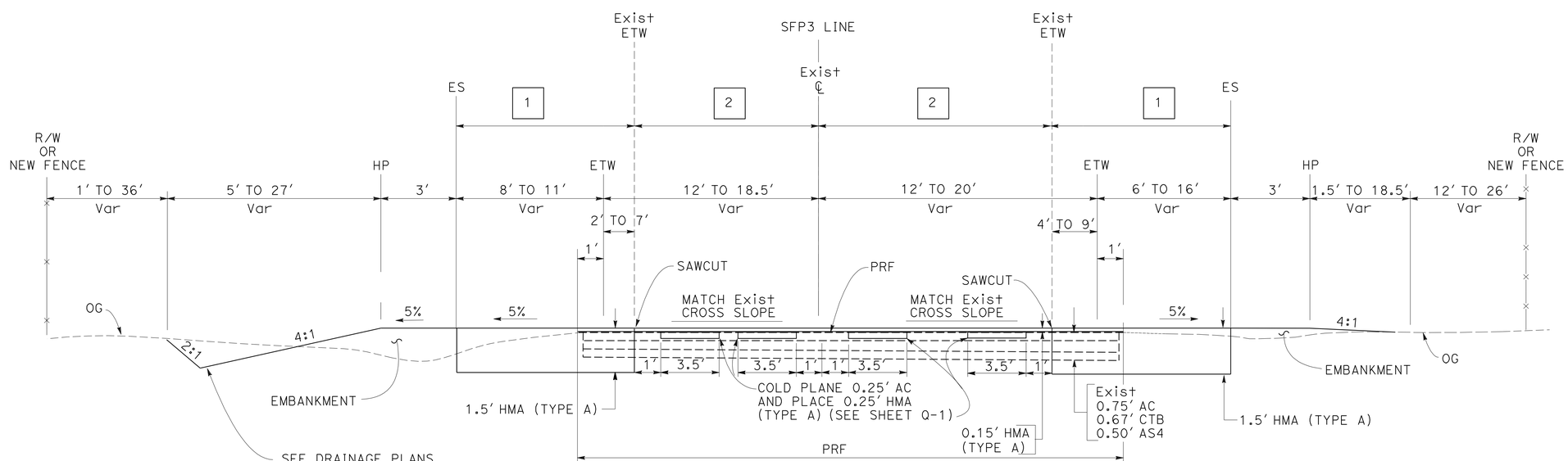

ROUTE 152

SFP3 205+80 TO 215+80

TYPICAL CROSS SECTIONS

NO SCALE

X-1

REVISED BY	DATE REVISED
PA	04/09

CALCULATED-DESIGNED BY	CHECKED BY
TOMONORI MORI	PARRIROKH ABEDI

FUNCTIONAL SUPERVISOR: MORTEZA AZIMI

STATE OF CALIFORNIA - DEPARTMENT OF TRANSPORTATION

Caltrans® DESIGN

LAST REVISION 12-03-10 | DATE PLOTTED => 31-JAN-2011 | TIME PLOTTED => 13:00

FOR COMPLETE RIGHT OF WAY DATA,
SEE RIGHT OF WAY RECORD MAPS
AT DISTRICT OFFICE.

LEGEND:

PAVING CONFORM

No. — STRUCTURAL SECTION

FENCE(TYPE WM METAL POST)

ABBREVIATION:

TCE - TEMPORARY CONSTRUCTION EASEMENT

NOTES:

1. EXACT LOCATIONS OF DRIVEWAY CONFORM AS DIRECTED BY ENGINEER.
2. FOR PAVING CONFORM DETAILS SEE SHEET C-1.

Dist	COUNTY	ROUTE	POST MILES TOTAL PROJECT	SHEET No.	TOTAL SHEETS
04	SCI	152	19.3/20.3	3	39

Parrirokh Abedi 5-28-09
REGISTERED CIVIL ENGINEER DATE

1-24-11
PLANS APPROVAL DATE

REGISTERED PROFESSIONAL ENGINEER
P. Abedi
No. 36025
Exp. 6-30-12
CIVIL
STATE OF CALIFORNIA

THE STATE OF CALIFORNIA OR ITS OFFICERS OR AGENTS SHALL NOT BE RESPONSIBLE FOR THE ACCURACY OR COMPLETENESS OF SCANNED COPIES OF THIS PLAN SHEET.

CURVE DATA

No.	R	Δ	T	L
1	2000.00	5° 56′ 46″	103.87	207.56
2	2500.00	12° 25′ 13″	272.04	541.94

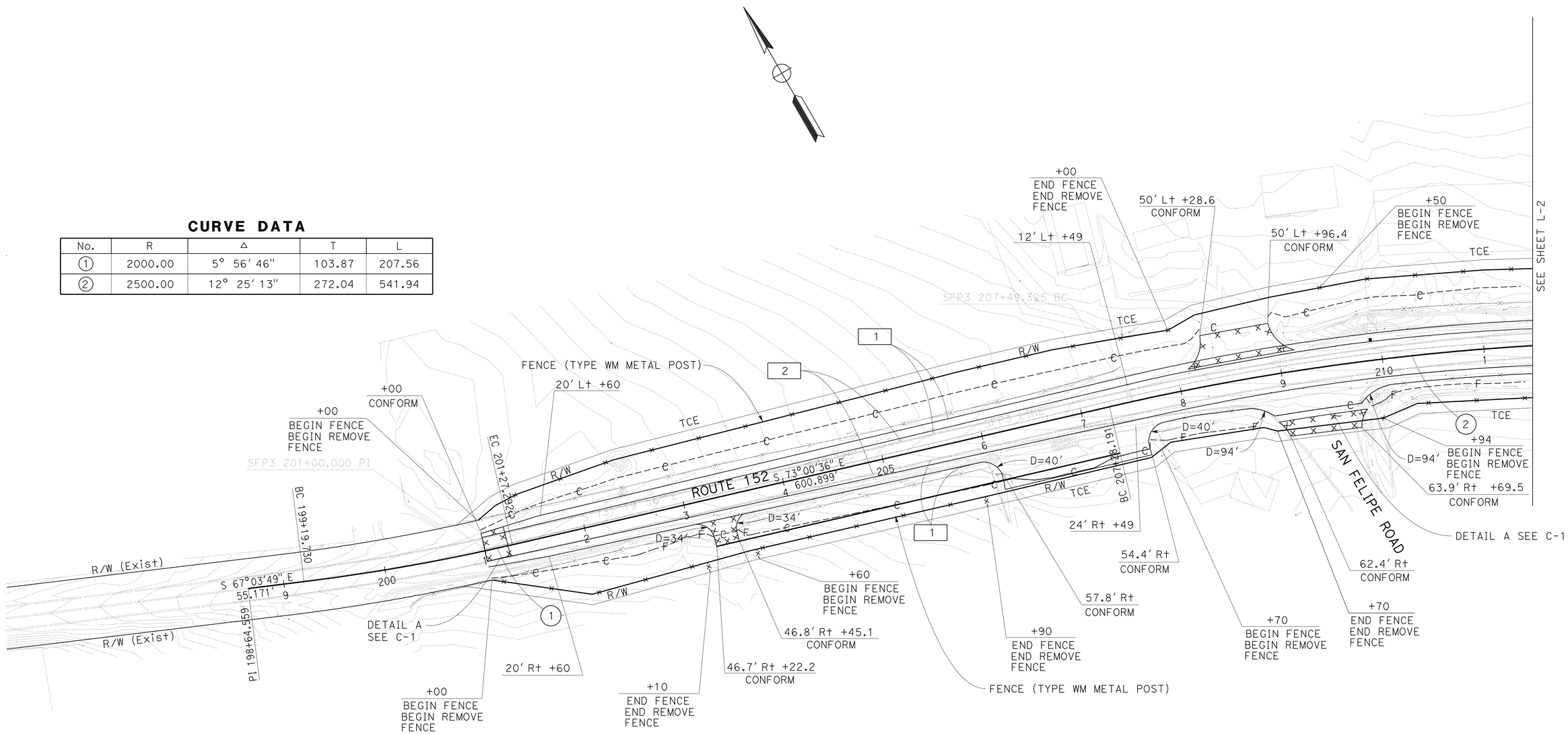

LAYOUT

SCALE: 1" = 50′

L-1

STATE OF CALIFORNIA - DEPARTMENT OF TRANSPORTATION
Caltrans
DESIGN

FUNCTIONAL SUPERVISOR: MORTEZA AZIMI
CALCULATED-DESIGNED BY: PARRIROKH ABEDI
CHECKED BY: TOMONORI MORI
REVISED BY: PA
DATE REVISED: 04/09

LAST REVISION 12-02-10 | DATE PLOTTED => 31-JAN-2011 | TIME PLOTTED => 13:00

Dist	COUNTY	ROUTE	POST MILES TOTAL PROJECT	SHEET No.	TOTAL SHEETS
04	SCI	152	19.3/20.3	4	39

Parirokh Abedi 5-28-09
REGISTERED CIVIL ENGINEER DATE

1-24-11
PLANS APPROVAL DATE

REGISTERED PROFESSIONAL ENGINEER
P. Abedi
No. 36025
Exp. 6-30-12
CIVIL
STATE OF CALIFORNIA

THE STATE OF CALIFORNIA OR ITS OFFICERS OR AGENTS SHALL NOT BE RESPONSIBLE FOR THE ACCURACY OR COMPLETENESS OF SCANNED COPIES OF THIS PLAN SHEET.

FOR COMPLETE RIGHT OF WAY DATA,
SEE RIGHT OF WAY RECORD MAPS
AT DISTRICT OFFICE.

CURVE DATA

No.	R	Δ	T	L
2	2500.00	12° 25′ 13″	272.04	541.94

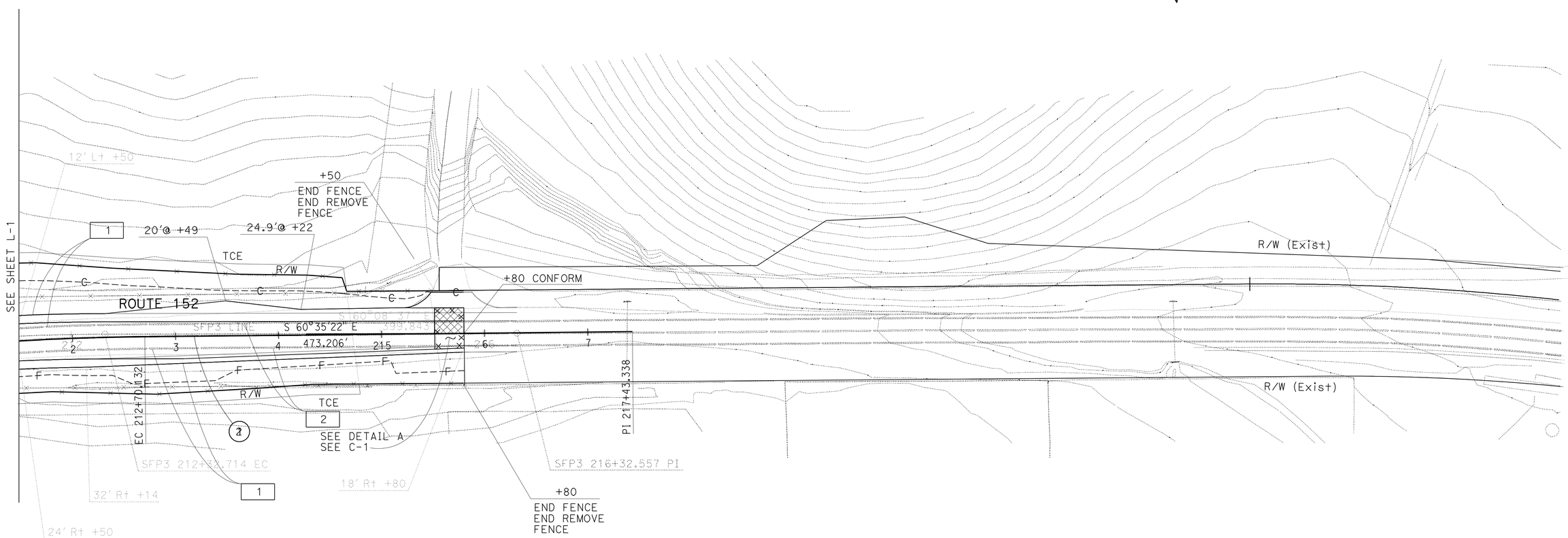

FOR NOTES, ABBREVIATIONS
&/OR LEGEND, SEE SHEET L-1

LAYOUT
SCALE: 1″ = 50′

L-2

STATE OF CALIFORNIA - DEPARTMENT OF TRANSPORTATION
Caltrans
DESIGN

FUNCTIONAL SUPERVISOR: MORTEZA AZIMI
CALCULATED-DESIGNED BY: TOMONORI MORI
CHECKED BY: PARRIROKH ABEDI
REVISED BY: PA
DATE REVISED: 04/09

LAST REVISION 12-02-10
DATE PLOTTED => 31-JAN-2011
TIME PLOTTED => 13:00

Dist	COUNTY	ROUTE	POST MILES TOTAL PROJECT	SHEET No.	TOTAL SHEETS
04	SCI	152	19.3/20.3	5	39

Parrirokh Abedi 5-28-09
REGISTERED CIVIL ENGINEER DATE

1-24-11
PLANS APPROVAL DATE

REGISTERED PROFESSIONAL ENGINEER
P. Abedi
No. 36025
Exp 6-30-10
CIVIL
STATE OF CALIFORNIA

THE STATE OF CALIFORNIA OR ITS OFFICERS OR AGENTS SHALL NOT BE RESPONSIBLE FOR THE ACCURACY OR COMPLETENESS OF ELECTRONIC COPIES OF THIS PLAN SHEET.

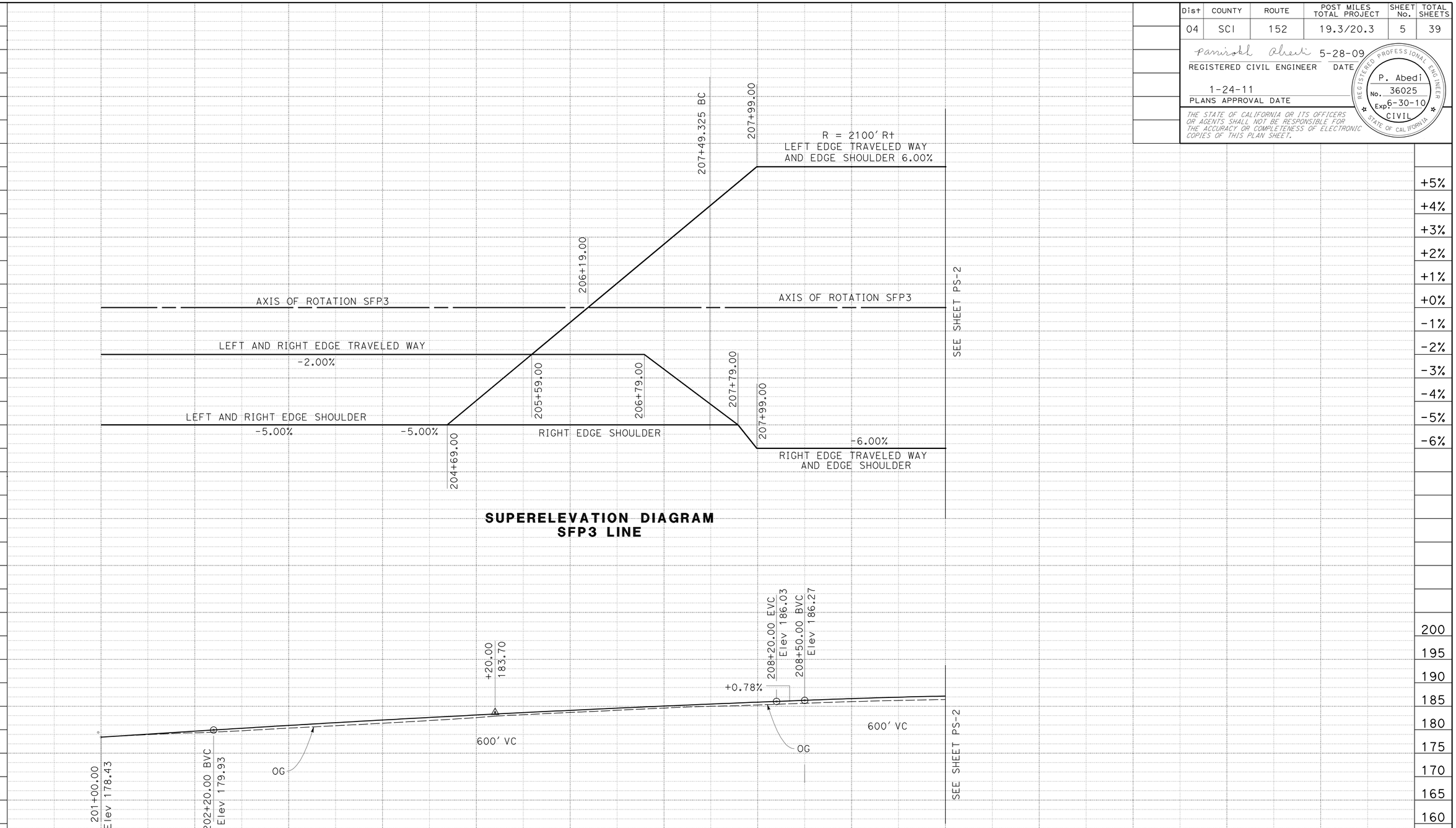

SFP3 LINE
PROFILE AND SUPERELEVATION DIAGRAM

SCALE: Horiz 1" = 50'
Vert 1" = 10'

PS-1

STATION		201	202	203	204	205	206	207	208	209	210	TOTAL
CY	Exc	0	202	209	220	253	304	254	218	216	279	
	Emb	0	6	40	45	67	60	48	74	27	175	

STATE OF CALIFORNIA - DEPARTMENT OF TRANSPORTATION
Caltrans
DESIGN

FUNCTIONAL SUPERVISOR: MORTEZA AZIMI
CALCULATED-DESIGNED BY: PARRIROKH ABEDI
CHECKED BY
REVISED BY: PA
DATE REVISED: 04/09

LAST REVISION 06-06-09
DATE PLOTTED => 31-JAN-2011
TIME PLOTTED => 13:04

Dist	COUNTY	ROUTE	POST MILES TOTAL PROJECT	SHEET No.	TOTAL SHEETS
04	SCI	152	19.3/20.3	6	39

Parrirokh Abedi 5-28-09
REGISTERED CIVIL ENGINEER DATE

1-24-11
PLANS APPROVAL DATE

REGISTERED PROFESSIONAL ENGINEER
P. Abedi
No. 36025
Exp 6-30-10
CIVIL
STATE OF CALIFORNIA

THE STATE OF CALIFORNIA OR ITS OFFICERS OR AGENTS SHALL NOT BE RESPONSIBLE FOR THE ACCURACY OR COMPLETENESS OF ELECTRONIC COPIES OF THIS PLAN SHEET.

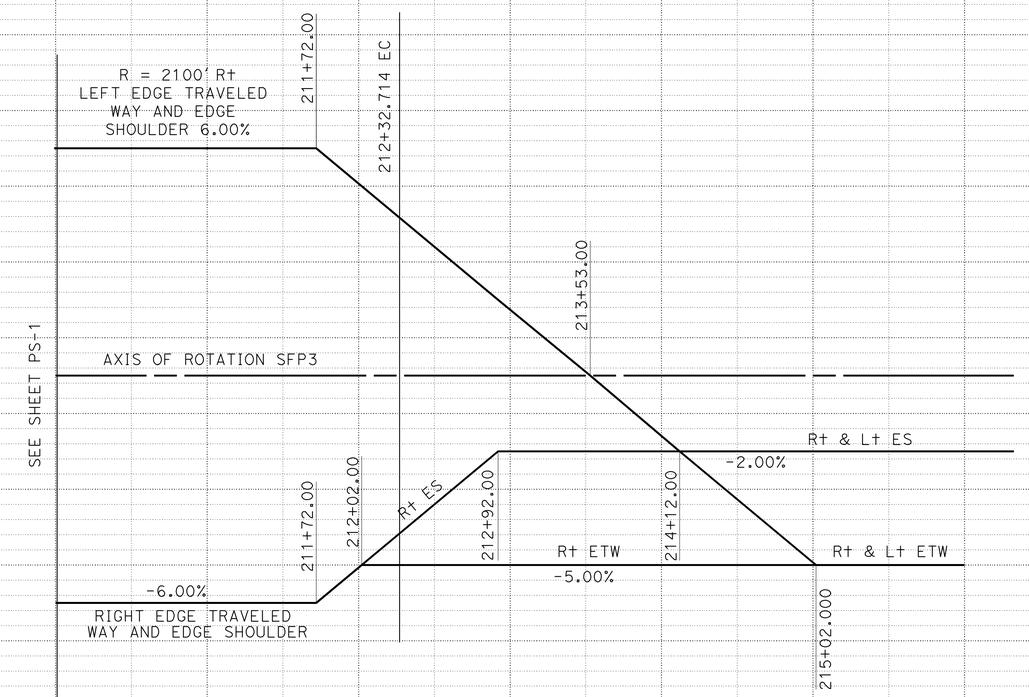

SUPERELEVATION DIAGRAM
SFP3 LINE

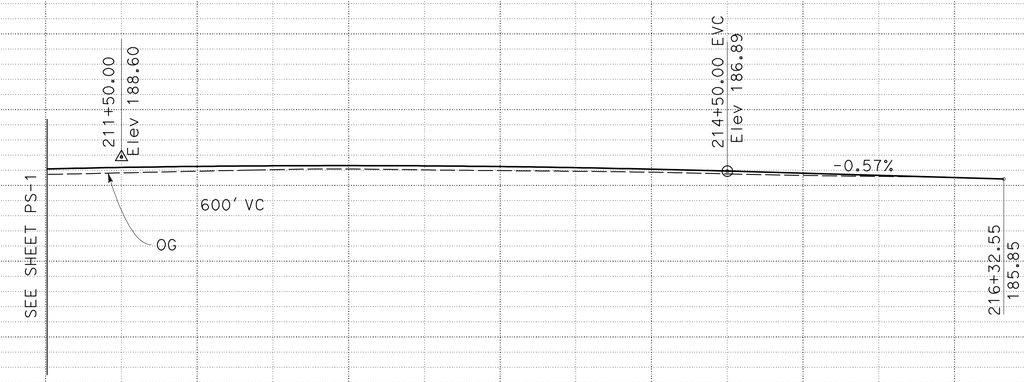

PROFILE SFP3 LINE

SFP3 LINE
PROFILE AND SUPERELEVATION DIAGRAM

SCALE: Horiz 1" = 50'
Vert 1" = 10'

PS-2

STATION		210	211	212	213	214	215	216	TOTAL
CY	Exc	279	270	346	277	247	270	235	3800
	Emb	175	186	115	92	56	16	13	1020

STATE OF CALIFORNIA - DEPARTMENT OF TRANSPORTATION
Caltrans
DESIGN

FUNCTIONAL SUPERVISOR: MORTEZA AZIMI
CALCULATED-DESIGNED BY: PARRIROKH ABEDI
CHECKED BY
REVISED BY: PA
DATE REVISED: 04/09

LAST REVISION 06-06-09
DATE PLOTTED => 31-JAN-2011
TIME PLOTTED => 13:04

Dist	COUNTY	ROUTE	POST MILES TOTAL PROJECT	SHEET No.	TOTAL SHEETS
04	SCI	152	19.3/20.3	7	39

Parrirokh Abedi 5-28-09
REGISTERED CIVIL ENGINEER DATE

1-24-11
PLANS APPROVAL DATE

REGISTERED PROFESSIONAL ENGINEER
P. Abedi
No. 36025
Exp. 6-30-10
CIVIL
STATE OF CALIFORNIA

THE STATE OF CALIFORNIA OR ITS OFFICERS OR AGENTS SHALL NOT BE RESPONSIBLE FOR THE ACCURACY OR COMPLETENESS OF SCANNED COPIES OF THIS PLAN SHEET.

LEGEND:

COLD PLANE AC SURFACING

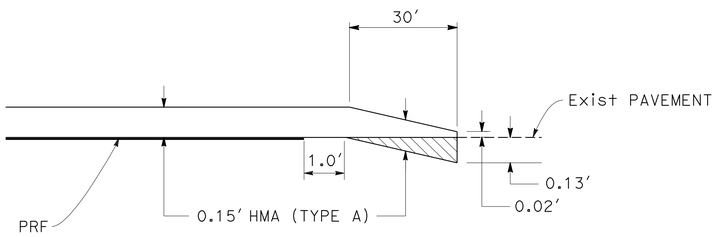

DETAIL A

PAVING CONFORM

Sta 201+00 TO 201+25
Sta 215+55 TO 215+80

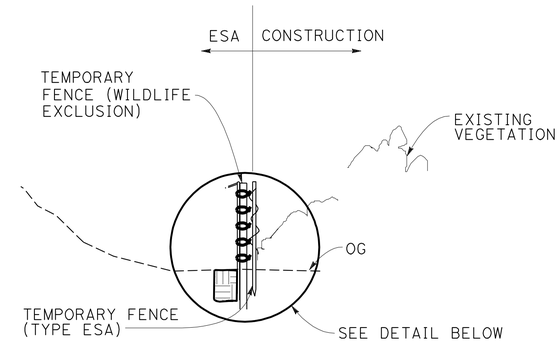

SECTION

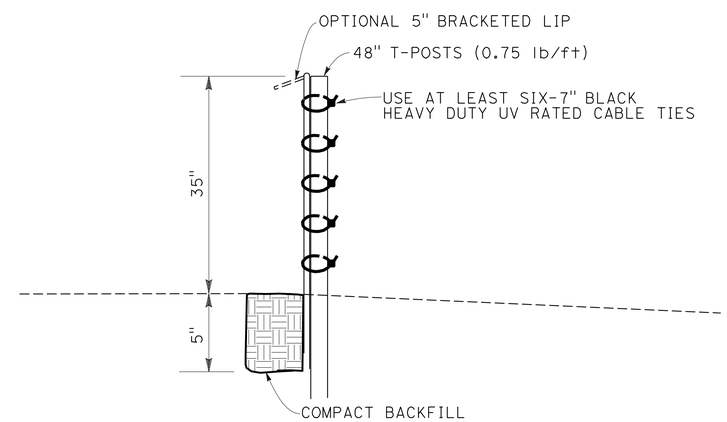

DETAIL

TEMPORARY FENCE (WILDLIFE EXCLUSION)

CONSTRUCTION DETAIL

NO SCALE

C-1

REVISED BY	PA
DATE REVISED	04/09
TOMONORI MORI	
PARRIROKH ABEDI	
CALCULATED-DESIGNED BY	
CHECKED BY	
FUNCTIONAL SUPERVISOR	
MORTEZA AZIMI	

STATE OF CALIFORNIA - DEPARTMENT OF TRANSPORTATION
Caltrans
DESIGN

LAST REVISION 04-08-10
DATE PLOTTED => 31-JAN-2011
TIME PLOTTED => 13:04

Dist	COUNTY	ROUTE	POST MILES TOTAL PROJECT	SHEET No.	TOTAL SHEETS
04	SCI	152	19.3/20.3	8	39

LICENSED LANDSCAPE ARCHITECT

1-24-11
PLANS APPROVAL DATE

LICENSED LANDSCAPE ARCHITECT
LAURIE J. SMITH
Signature
08-31-12
Renewal Date
06-09-09
Date
STATE OF CALIFORNIA

THE STATE OF CALIFORNIA OR ITS OFFICERS OR AGENTS SHALL NOT BE RESPONSIBLE FOR THE ACCURACY OR COMPLETENESS OF SCANNED COPIES OF THIS PLAN SHEET.

NOTE:

FOR ACCURATE RIGHT OF WAY DATA, CONTACT
RIGHT OF WAY ENGINEERING AT THE DISTRICT OFFICE.

LEGEND:

EROSION CONTROL (TYPE 1)

EROSION CONTROL (COMPOST BLANKET)
EROSION CONTROL (HYDROSEED)

EROSION CONTROL (TYPE 2) (BIOFILTRATION STRIP)

COMPOST, INCORPORATE
EROSION CONTROL (HYDROSEED)

FIBER ROLLS

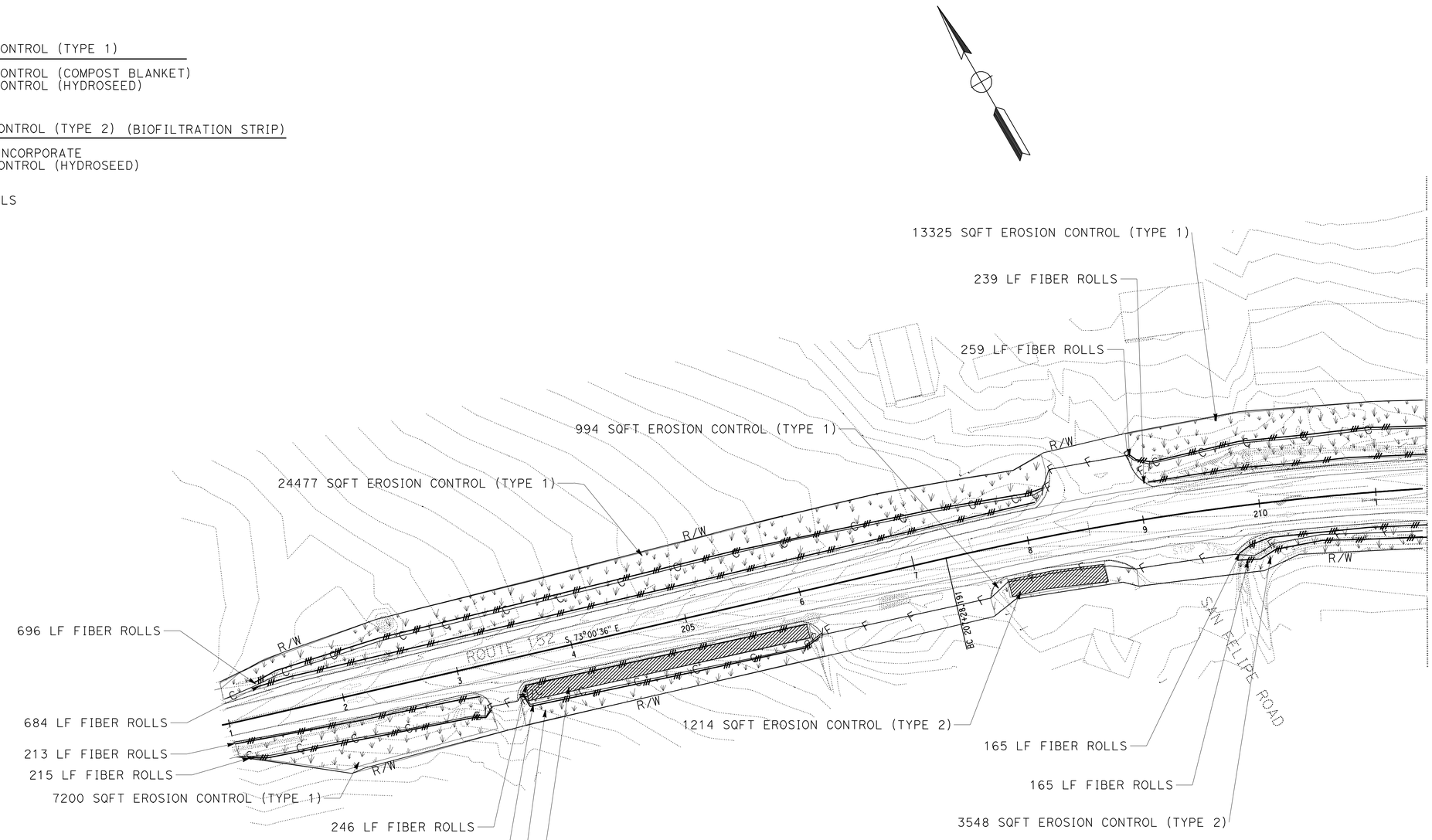

THIS PLAN ACCURATE FOR EROSION CONTROL WORK ONLY

EROSION CONTROL PLAN

SCALE: 1" = 50'

EC-1

STATE OF CALIFORNIA - DEPARTMENT OF TRANSPORTATION
Caltrans®
WATER QUALITY

SENIOR LANDSCAPE ARCHITECT: DAVID W YAM

CALCULATED-DESIGNED BY: LAURIE J SMITH
CHECKED BY: ALEX MCDONALD

REVISED BY | DATE REVISED

LAST REVISION 11-24-10 | DATE PLOTTED => 31-JAN-2011 | TIME PLOTTED => 13:16

Dist	COUNTY	ROUTE	POST MILES TOTAL PROJECT	SHEET No.	TOTAL SHEETS
04	SCI	152	19.3/20.3	9	39

LICENSED LANDSCAPE ARCHITECT

1-24-11
PLANS APPROVAL DATE

LICENSED LANDSCAPE ARCHITECT
Laurie J. Smith No. 4890
Signature
8-31-12
Renewal Date
Date
STATE OF CALIFORNIA

THE STATE OF CALIFORNIA OR ITS OFFICERS OR AGENTS SHALL NOT BE RESPONSIBLE FOR THE ACCURACY OR COMPLETENESS OF SCANNED COPIES OF THIS PLAN SHEET.

NOTE:

FOR ACCURATE RIGHT OF WAY DATA, CONTACT
RIGHT OF WAY ENGINEERING AT THE DISTRICT OFFICE.

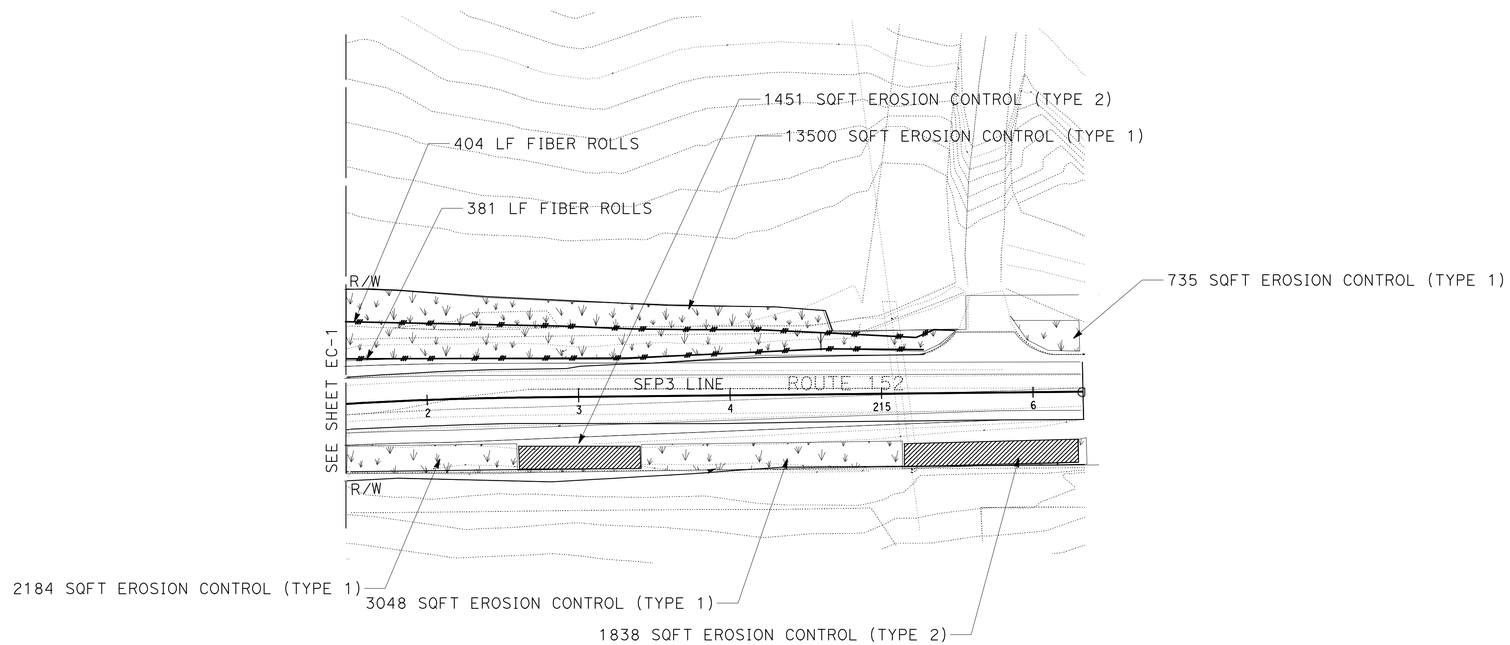

THIS PLAN ACCURATE FOR EROSION CONTROL WORK ONLY

EROSION CONTROL PLAN

SCALE: 1" = 50'

EC-2

STATE OF CALIFORNIA - DEPARTMENT OF TRANSPORTATION
Caltrans
WATER QUALITY

SENIOR LANDSCAPE ARCHITECT
DAVID W YAM

CALCULATED-DESIGNED BY
CHECKED BY

LAURIE J SMITH
ALEX MCDONALD

REVISED BY
DATE REVISED

LAST REVISION 11-24-10
DATE PLOTTED => 31-JAN-2011
TIME PLOTTED => 13:16

Dist	COUNTY	ROUTE	POST MILES TOTAL PROJECT	SHEET No.	TOTAL SHEETS
04	SCI	152	19.3/20.3	10	39

LICENSED LANDSCAPE ARCHITECT

1-24-11
PLANS APPROVAL DATE

LICENSED LANDSCAPE ARCHITECT Laurie J. Smith No. 4088 Signature 8-31-12 Renewal Date Date STATE OF CALIFORNIA

THE STATE OF CALIFORNIA OR ITS OFFICERS OR AGENTS SHALL NOT BE RESPONSIBLE FOR THE ACCURACY OR COMPLETENESS OF SCANNED COPIES OF THIS PLAN SHEET.

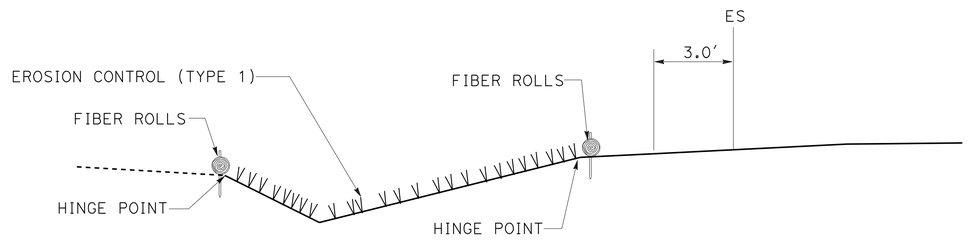

SECTION

EROSION CONTROL (TYPE 1) WITH FIBER ROLLS TYP

EROSION CONTROL QUANTITIES

SHEET No.	LOCATION BEGIN	LOCATION END	TYPE	AREA (SQFT)	COMPOST (INCORPORATE) (SQYD)	EROSION CONTROL (COMPOST BLANKET) (CY)	EROSION CONTROL (HYDROSEED) (SQFT)	FIBER ROLL (FT)
EC-1	201+00 R	203+20 R	1	7200	-	6	7200	428
	201+00 L	208+28 L	1	24477	-	19	24477	1380
	203+46 R	206+09 R	1	5088	-	4	5088	515
	203+54 R	206+00 R	2	3117	346	-	3117	258
	207+58 R	208+85 R	1	994	-	1	994	-
	207+75 R	208+57 R	2	1214	135	-	1214	-
	209+00 L	211+45 L	1	13325	-	10	13325	498
	209+75 R	211+45 R	1	3548	-	3	3548	330
EC-2	211+48 R	212+60 R	1	2184	-	2	2184	-
	211+48 L	215+50 L	1	13500	-	10	13500	785
	212+60 R	213+41 R	2	1451	161	-	1451	-
	213+41 R	215+14 R	1	3048	-	3	3048	-
	215+14 R	216+32 R	2	1838	204	-	1838	-
	215+85 L	216+32 L	1	735	-	1	735	-
			TOTAL		846	59	81719	4194

EROSION CONTROL QUANTITIES

ECQ-1

STATE OF CALIFORNIA - DEPARTMENT OF TRANSPORTATION
Caltrans
WATER QUALITY

SENIOR LANDSCAPE ARCHITECT: DAVID W YAM
CALCULATED-DESIGNED BY: LAURIE J SMITH
CHECKED BY: ALEX MCDONALD
REVISED BY
DATE REVISED

LAST REVISION 11-24-10
DATE PLOTTED => 31-JAN-2011
TIME PLOTTED => 13:16

Dist	COUNTY	ROUTE	POST MILES TOTAL PROJECT	SHEET No.	TOTAL SHEETS
04	SCI	152	19.3/20.3	11	39

REGISTERED CIVIL ENGINEER 5-28-09 DATE

1-24-11
PLANS APPROVAL DATE

REGISTERED PROFESSIONAL ENGINEER Fang Hong Wu No. 31258 Exp. 9-30-12 CIVIL STATE OF CALIFORNIA

THE STATE OF CALIFORNIA OR ITS OFFICERS OR AGENTS SHALL NOT BE RESPONSIBLE FOR THE ACCURACY OR COMPLETENESS OF SCANNED COPIES OF THIS PLAN SHEET.

FOR COMPLETE RIGHT OF WAY DATA, SEE RIGHT OF WAY RECORD MAPS AT DISTRICT OFFICE.

NOTES:

1. FL ELEVATIONS AND OFFSET AS SHOWN SUBJECT TO CHANGE BY ENGINEER BASED ON ACTUAL FIELD CONDITIONS
2. REGRADE FOR GUTTER CROSSING WITHIN THE RIGHT OF WAY, SUBJECT TO APPROVAL BY THE ENGINEER.
3. GRADE TO DRAIN AVOID RUNOFF FROM DRAINING TO THE Exist FRUIT STAND AREA.

LEGEND:

- GUTTER CENTER LINE
- GRADE TO DRAIN
- (1) DRAINAGE SYSTEM NUMBER
- (a) DRAINAGE UNIT
- RSP

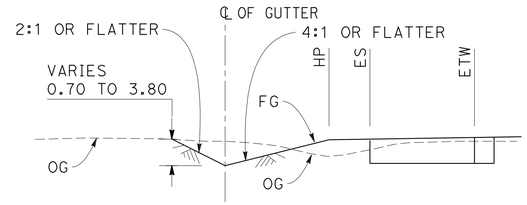

SECTION A-A (TYPICAL)
Sta 201+00 TO 201+27.29 (LEFT & RIGHT), TRANSITION
Sta 201+27.29 TO 215+20 (LEFT)
Sta 201+27.29 TO 205+94 (RIGHT)
NO SCALE

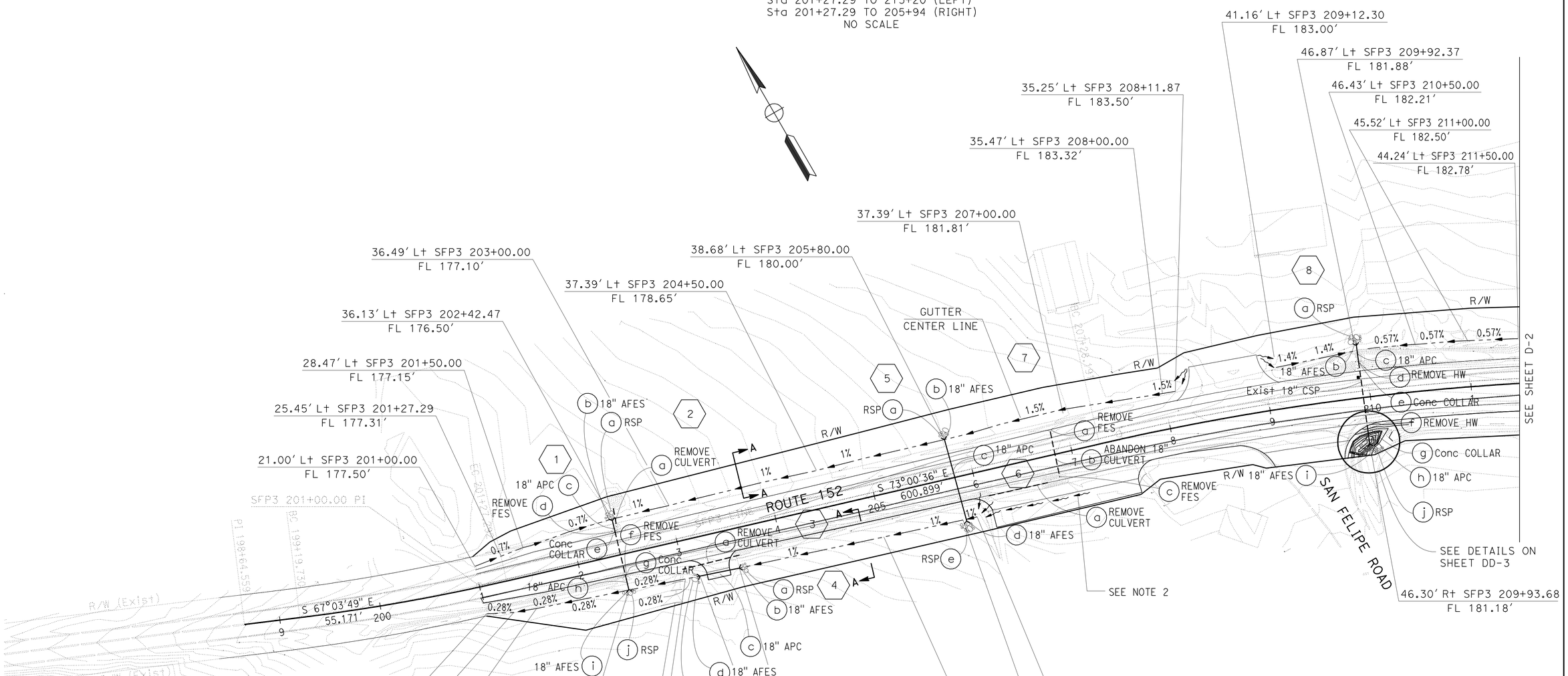

FOR NOTES, ABBREVIATIONS &/OR LEGEND, SEE SHEET D-1

DRAINAGE PLAN

SCALE: 1" = 50′

THIS PLAN ACCURATE FOR DRAINAGE WORK ONLY

D-1

REVISED BY	DATE REVISED
FHW	04/09

CALCULATED-DESIGNED BY	CHECKED BY
FANG HONG WU	AMAN ZAREAI

FUNCTIONAL SUPERVISOR: AMAN ZAREAI

STATE OF CALIFORNIA - DEPARTMENT OF TRANSPORTATION

Caltrans® DESIGN

LAST REVISION 11-24-10 | DATE PLOTTED => 31-JAN-2011 | TIME PLOTTED => 13:01

Dist	COUNTY	ROUTE	POST MILES TOTAL PROJECT	SHEET No.	TOTAL SHEETS
04	SCI	152	19.3/20.3	12	39

REGISTERED CIVIL ENGINEER 5-28-09 DATE

1-24-11
PLANS APPROVAL DATE

REGISTERED PROFESSIONAL ENGINEER
Fang Hong Wu
No. 31258
Exp. 9-03-12
CIVIL
STATE OF CALIFORNIA

THE STATE OF CALIFORNIA OR ITS OFFICERS OR AGENTS SHALL NOT BE RESPONSIBLE FOR THE ACCURACY OR COMPLETENESS OF SCANNED COPIES OF THIS PLAN SHEET.

FOR COMPLETE RIGHT OF WAY DATA,
SEE RIGHT OF WAY RECORD MAPS
AT DISTRICT OFFICE.

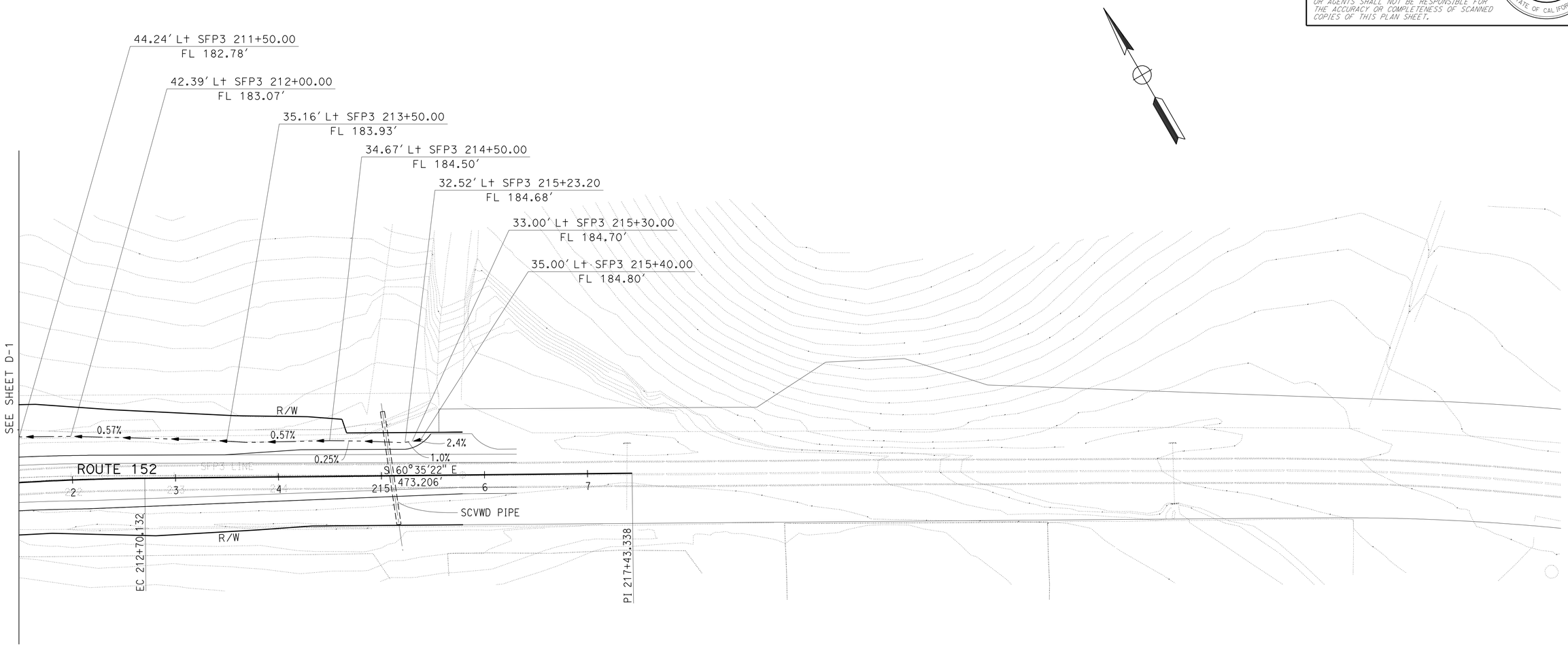

FOR NOTES, ABBREVIATIONS
&/OR LEGEND, SEE SHEET D-1

THIS PLAN ACCURATE FOR
DRAINAGE WORK ONLY

DRAINAGE PLAN

SCALE: 1" = 50'

D-2

FHW	04/09
REVISED BY	DATE REVISED
FANG HONG WU	AMAN ZAREAI
CALCULATED-DESIGNED BY	CHECKED BY
FUNCTIONAL SUPERVISOR	AMAN ZAREAI

STATE OF CALIFORNIA - DEPARTMENT OF TRANSPORTATION
Caltrans
DESIGN

LAST REVISION 11-24-10
DATE PLOTTED => 31-JAN-2011
TIME PLOTTED => 13:01

Dist	COUNTY	ROUTE	POST MILES TOTAL PROJECT	SHEET No.	TOTAL SHEETS
04	SCI	152	19.3/20.3	13	39

Parrirokh Abedi 5-28-09
REGISTERED CIVIL ENGINEER DATE

1-24-11
PLANS APPROVAL DATE

REGISTERED PROFESSIONAL ENGINEER P. Abedi No. 36025 Exp. 6-30-12 CIVIL STATE OF CALIFORNIA

THE STATE OF CALIFORNIA OR ITS OFFICERS OR AGENTS SHALL NOT BE RESPONSIBLE FOR THE ACCURACY OR COMPLETENESS OF ELECTRONIC COPIES OF THIS PLAN SHEET.

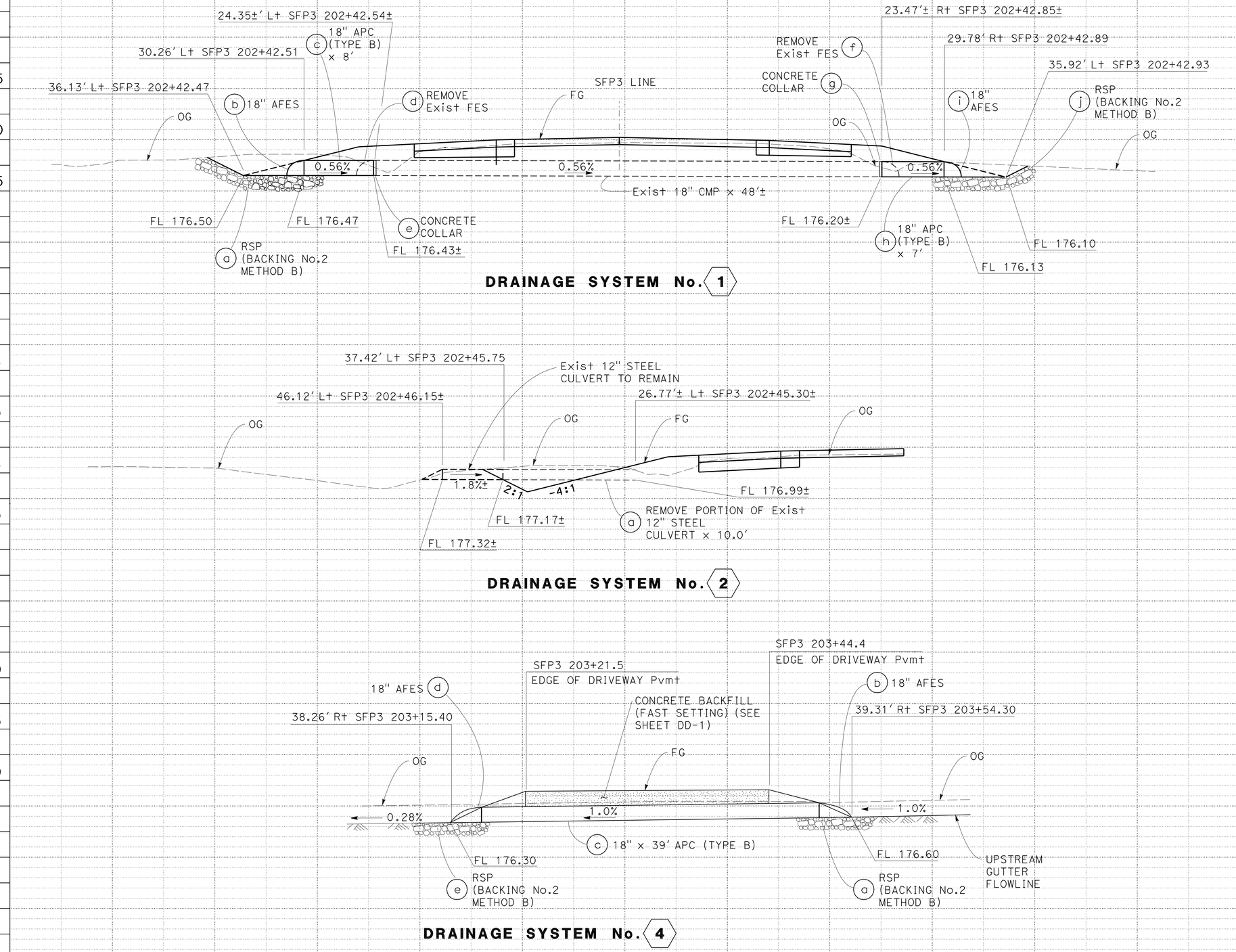

DRAINAGE PROFILES

SCALE: Horiz 1" = 5'
Vert 1" = 5'

DP-1

STATION		TOTAL
CY	Exc	
	Emb	

STATE OF CALIFORNIA - DEPARTMENT OF TRANSPORTATION
Caltrans
HYDRAULICS

FUNCTIONAL SUPERVISOR: MORTEZA AZIMI
CALCULATED-DESIGNED BY: PARRIROKH ABEDI
CHECKED BY: TOMONORI MORI
REVISED BY: PA
DATE REVISED: 04/09

LAST REVISION 11-30-10 | DATE PLOTTED => 31-JAN-2011 | TIME PLOTTED => 13:01

Dist	COUNTY	ROUTE	POST MILES TOTAL PROJECT	SHEET No.	TOTAL SHEETS
04	SCI	152	19.3/20.3	14	39

Parviz Abedi 5-28-09
REGISTERED CIVIL ENGINEER DATE

1-24-11
PLANS APPROVAL DATE

REGISTERED PROFESSIONAL ENGINEER
P. Abedi
No. 36025
Exp 6-30-12
CIVIL
STATE OF CALIFORNIA

THE STATE OF CALIFORNIA OR ITS OFFICERS OR AGENTS SHALL NOT BE RESPONSIBLE FOR THE ACCURACY OR COMPLETENESS OF ELECTRONIC COPIES OF THIS PLAN SHEET.

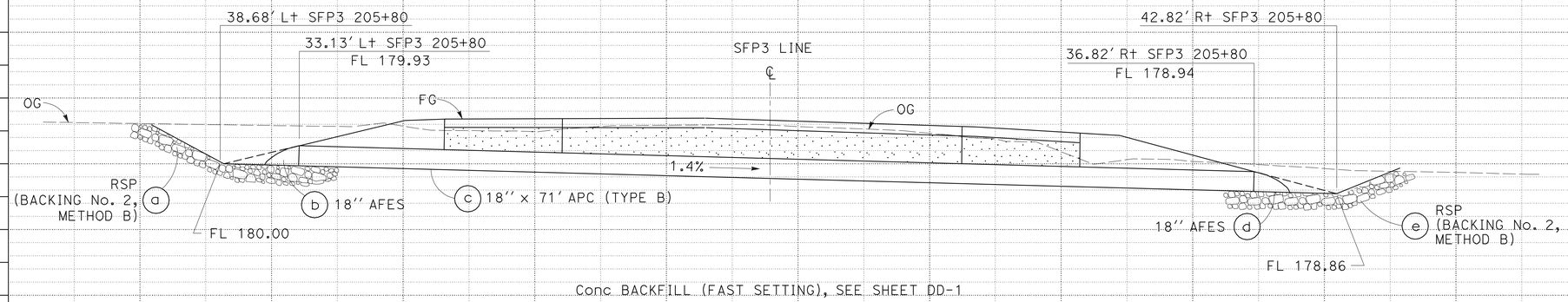

DRAINAGE SYSTEM No. 5

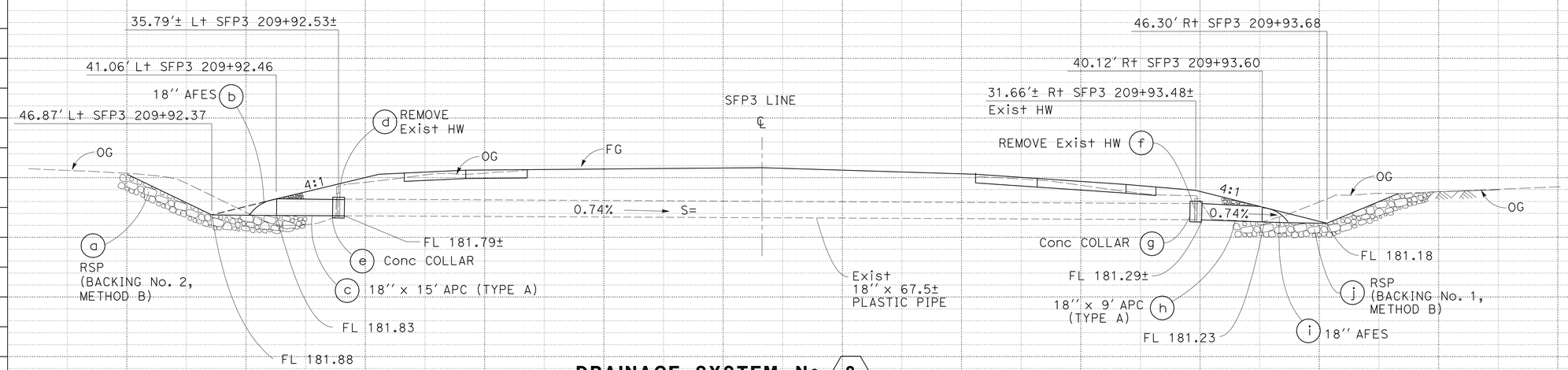

DRAINAGE SYSTEM No. 8

DRAINAGE PROFILES

SCALE: Horiz 1" = 5′
Vert 1" = 5′

DP-2

STATION		TOTAL
CY	Exc	
	Emb	

STATE OF CALIFORNIA - DEPARTMENT OF TRANSPORTATION
Caltrans
HYDRAULICS

FUNCTIONAL SUPERVISOR
CALCULATED-DESIGNED BY
CHECKED BY
REVISED BY PA
DATE REVISED 04/09

LAST REVISION 11-23-10
DATE PLOTTED => 31-JAN-2011
TIME PLOTTED => 13:01

Dist	COUNTY	ROUTE	POST MILES TOTAL PROJECT	SHEET No.	TOTAL SHEETS
04	SCI	152	19.3/20.3	15	39

REGISTERED CIVIL ENGINEER 5-28-09 DATE

1-24-11
PLANS APPROVAL DATE

REGISTERED PROFESSIONAL ENGINEER Fang Hong Wu No. 31258 Exp. 9-03-10 CIVIL STATE OF CALIFORNIA

THE STATE OF CALIFORNIA OR ITS OFFICERS OR AGENTS SHALL NOT BE RESPONSIBLE FOR THE ACCURACY OR COMPLETENESS OF ELECTRONIC COPIES OF THIS PLAN SHEET.

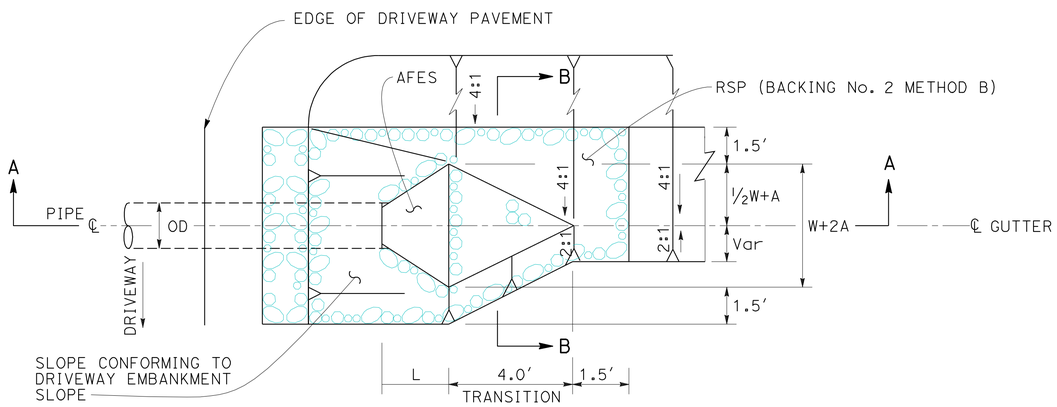

GUTTER TRANSITION AND RSP AT INLET

4 (a) AND (e)

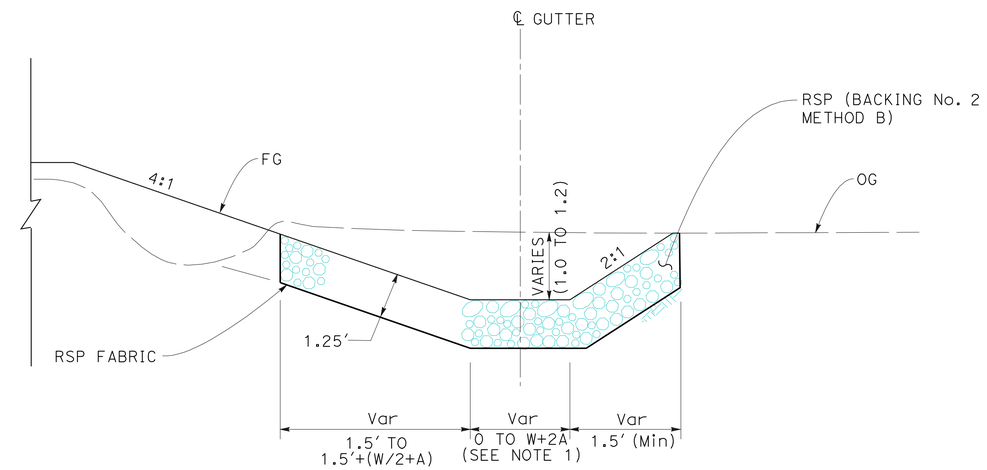

SECTION B-B

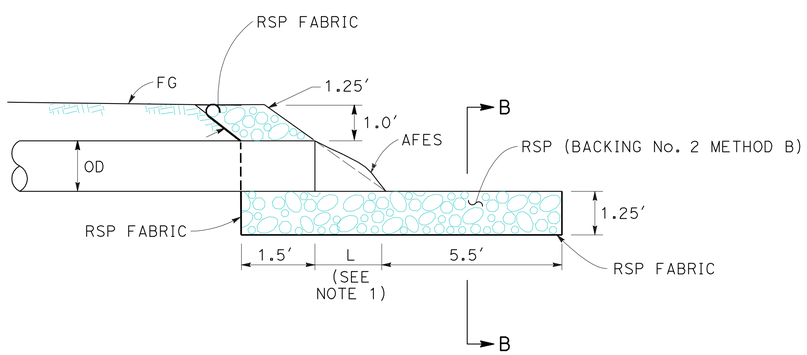

SECTION A-A

NOTES:

1. SEE Std D94A AND D94B FOR W, A AND L, AND AFES DETAILS
2. OD = OUTSIDE DIAMETER
3. WRAP FABRIC AROUND ROCKS AT THE END.
   NO FABRIC SHALL PROTRUDE ABOVE THE GROUND.

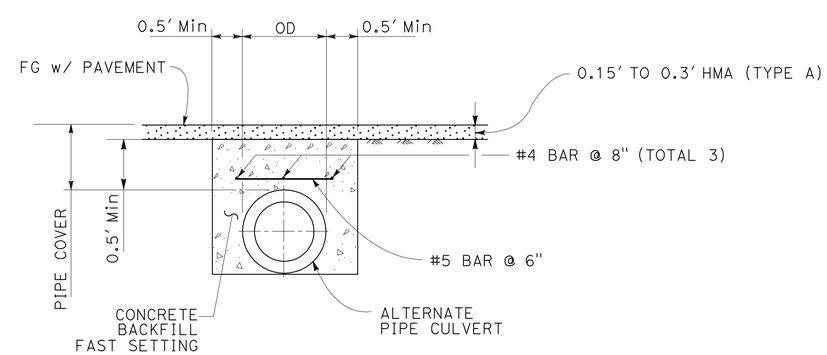

CONCRETE BACKFILL FAST SETTING

4 (c) 5 (c)

NOTE:

FOR PIPE COVER GREATER THAN 24", NO REINFORCEMENT IS REQUIRED. FOR PIPE COVER LESS THAN 24", USE REINFORCEMENT.

DRAINAGE DETAILS

NO SCALE

DD-1

STATE OF CALIFORNIA - DEPARTMENT OF TRANSPORTATION
Caltrans® HYDRAULICS

FUNCTIONAL SUPERVISOR: MORTEZA AZIMI
CALCULATED-DESIGNED BY: FANG HONG WU
CHECKED BY: MORTEZA AZIMI
REVISED BY / DATE REVISED

LAST REVISION 06-06-09
DATE PLOTTED => 31-JAN-2011
TIME PLOTTED => 13:01

Dist	COUNTY	ROUTE	POST MILES TOTAL PROJECT	SHEET No.	TOTAL SHEETS
04	SCI	152	19.3/20.3	16	39

REGISTERED CIVIL ENGINEER 5-28-09 DATE

1-24-11
PLANS APPROVAL DATE

REGISTERED PROFESSIONAL ENGINEER Fang Hong Wu No. 31258 Exp. 9-03-12 CIVIL STATE OF CALIFORNIA

THE STATE OF CALIFORNIA OR ITS OFFICERS OR AGENTS SHALL NOT BE RESPONSIBLE FOR THE ACCURACY OR COMPLETENESS OF ELECTRONIC COPIES OF THIS PLAN SHEET.

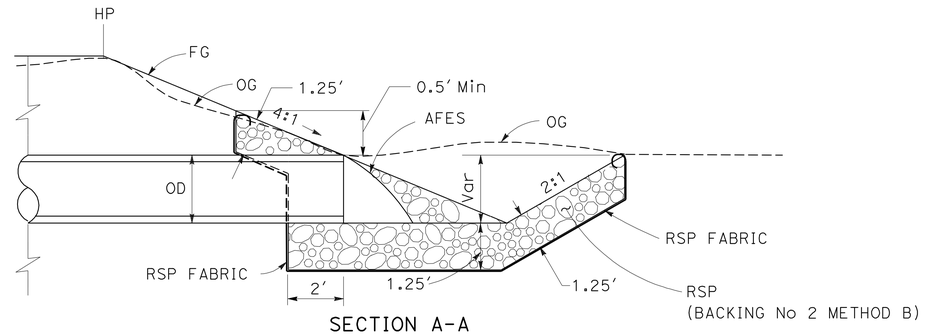

SECTION A-A

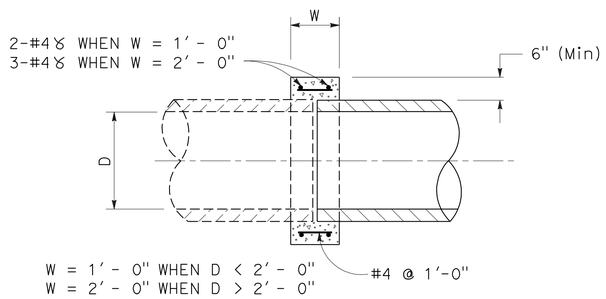

TYPICAL CONCRETE COLLAR

1 e, 1 g, 8 e, 8 g

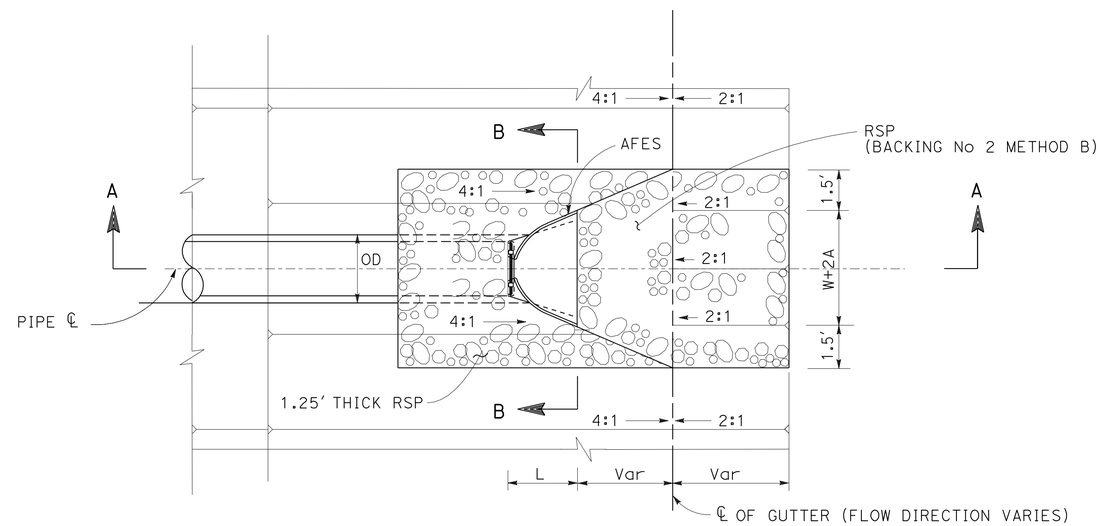

PLAN

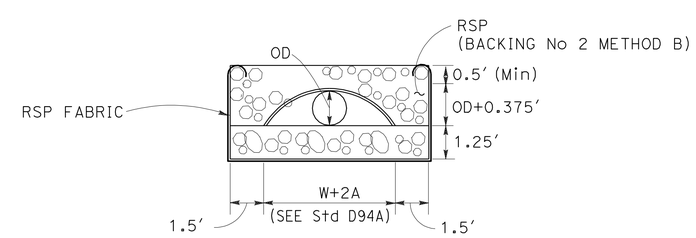

SECTION B-B

NOTES:

1. SEE Std PLAN D94A&B FOR W, A, L AND AFES DETAILS
2. OD = OUTSIDE DIAMETER
3. WRAP FABRIC AROUND ROCKS AT THE END
   NO FABRIC SHALL PROTRUDE ABOVE THE GROUND

RSP AT CULVERT INLET AND OUTLET (TYPICAL)

1 a, 1 j, 5 a, 5 e, 8 a

DRAINAGE DETAILS

NO SCALE

DD-2

STATE OF CALIFORNIA - DEPARTMENT OF TRANSPORTATION
Caltrans
HYDRAULICS

FUNCTIONAL SUPERVISOR: MORTEZA AZIMI
CALCULATED-DESIGNED BY: FANG HONG WU
CHECKED BY: MORTEZA AZIMI
REVISED BY
DATE REVISED

LAST REVISION 06-04-09
DATE PLOTTED => 31-JAN-2011
TIME PLOTTED => 13:02

Dist	COUNTY	ROUTE	POST MILES TOTAL PROJECT	SHEET No.	TOTAL SHEETS
04	SCI	152	19.3/20.3	17	39

REGISTERED CIVIL ENGINEER 5-28-09 DATE

1-24-11
PLANS APPROVAL DATE

REGISTERED PROFESSIONAL ENGINEER Fang Hong Wu No. 31258 Exp. 9-03-12 CIVIL STATE OF CALIFORNIA

THE STATE OF CALIFORNIA OR ITS OFFICERS OR AGENTS SHALL NOT BE RESPONSIBLE FOR THE ACCURACY OR COMPLETENESS OF SCANNED COPIES OF THIS PLAN SHEET.

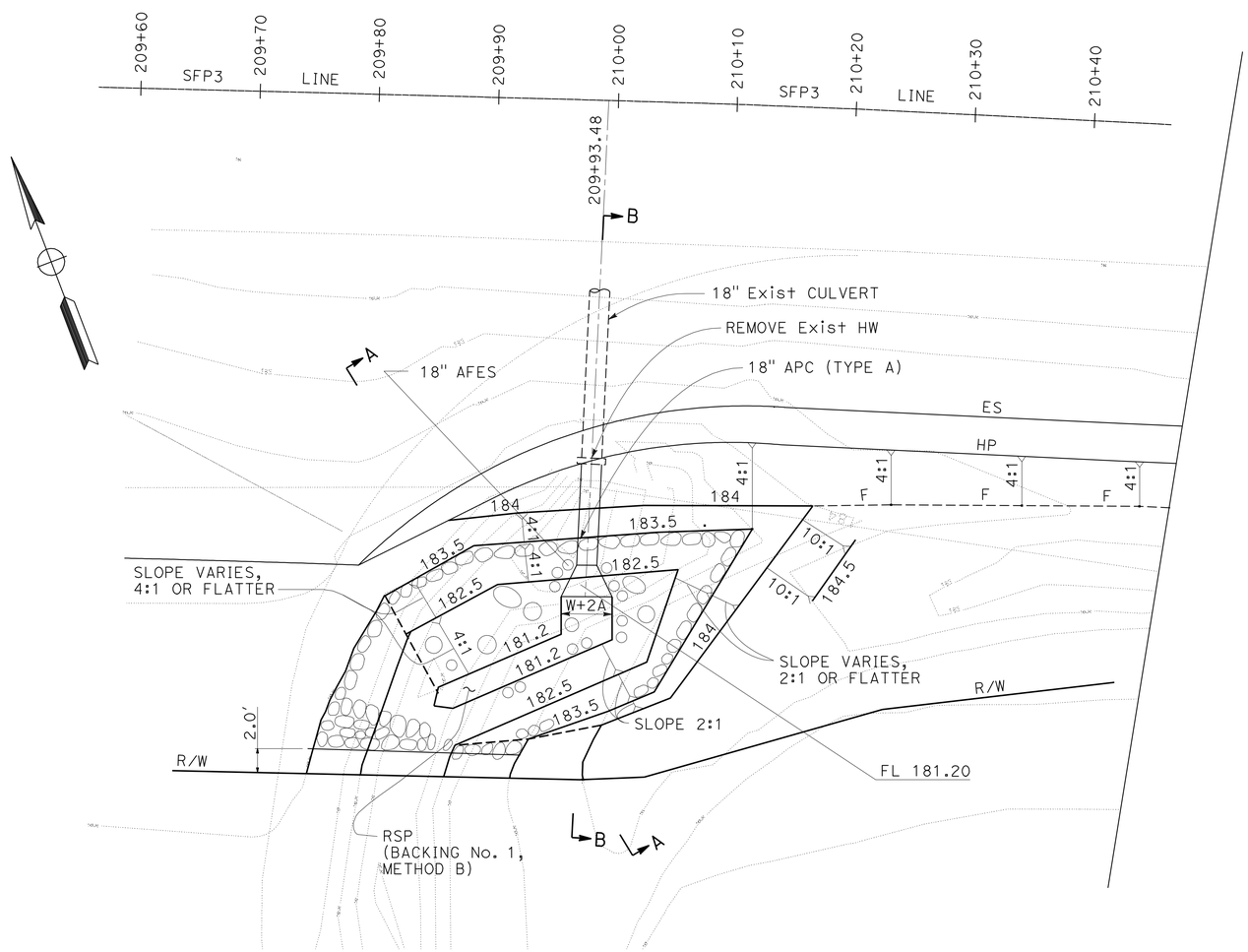

RSP AT OUTLET DRAINAGE SYSTEM No. 8

SCALE: 1" = 6'

NOTES:

1. SEE Std PLAN D94A&B FOR W, A, L AND AFES DETAILS
2. OD = OUTSIDE DIAMETER
3. WRAP FABRIC AROUND ROCKS AT THE END NO FABRIC SHALL PROTRUDE ABOVE THE GROUND
4. GRADING SUBJECT TO CHANGE BY THE ENGINEER BASED ON FIELD CONDITIONS.

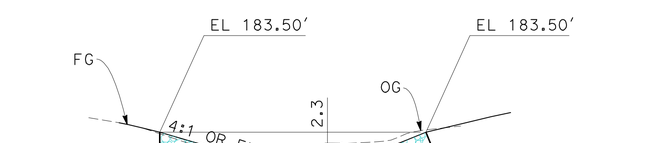

SECTION A-A
NO SCALE

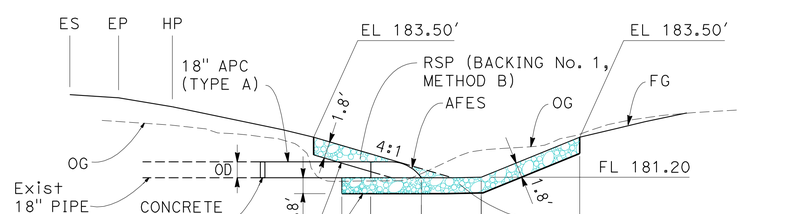

SECTION B-B
NO SCALE

DRAINAGE DETAILS

SCALE AS SHOWN

DD-3

STATE OF CALIFORNIA - DEPARTMENT OF TRANSPORTATION
Caltrans HYDRAULICS

FUNCTIONAL SUPERVISOR: MORTEZA AZIMI
CALCULATED-DESIGNED BY: Fang Hong Wu
CHECKED BY: MORTEZA AZIMI
REVISED BY: A
DATE REVISED: A

LAST REVISION 12-01-10
DATE PLOTTED => 31-JAN-2011
TIME PLOTTED => 13:02

Dist	COUNTY	ROUTE	POST MILES TOTAL PROJECT	SHEET No.	TOTAL SHEETS
04	SCI	152	19.3/20.3	18	39

REGISTERED CIVIL ENGINEER 5-28-09 DATE

1-24-11
PLANS APPROVAL DATE

REGISTERED PROFESSIONAL ENGINEER P. Abedi No. 36025 Exp 6-30-12 CIVIL STATE OF CALIFORNIA

THE STATE OF CALIFORNIA OR ITS OFFICERS OR AGENTS SHALL NOT BE RESPONSIBLE FOR THE ACCURACY OR COMPLETENESS OF SCANNED COPIES OF THIS PLAN SHEET.

ALTERNATIVE PIPE CULVERT ALLOWABLE MATERIAL AND PROTECTION

DESIGNATION	RCP	CSP		SSRP		PLASTIC PIPE	
		BITUMINOUS COATING	NO BITUMINOUS COATING	BITUMINOUS COATING	NO BITUMINOUS COATING	SMOOTH INTERIOR WALL TYPE	CORRUGATED INTERIOR WALL TYPE
APC (TYPE A)	YES	NO	NO	YES(0.05" THICK)	YES(0.11" THICK)	YES	NO
APC (TYPE B)	YES	YES(0.05" THICK)	YES(0.11" THICK)	YES(0.05" THICK)	YES(0.11" THICK)	YES	YES

ABBREVIATION:
S-STANDARD

DRAINAGE QUANTITIES

DRAINAGE SYSTEM No.	DRAINAGE UNIT	18" APC (TYPE A) FT	18" APC (TYPE B) FT	CONCRETE COLLAR (N) EA	18" AFES EA	ROCK SLOPE PROTECTION (BACKING No.2 METHOD B) CY	ROCK SLOPE PROTECTION (BACKING No.1 METHOD B) CY	ROCK SLOPE PROTECTION FABRIC SQFT	ABANDON CULVERT FT	REMOVE CULVERT FT	REMOVE FLARE END SECTION EA	REMOVE HEADWALL EA	PIPE JOINT CLASSIFICATION (N)	CONCRETE BACKFILL FAST SETTING CY	DESCRIPTION	STATION	DRAINAGE PLAN SHEET No.	DRAINAGE SYSTEM No.	DRAINAGE UNIT
1	a					6.6		140							RSP	36.13 Lt SFP3 202+42.47	D-1	1	a
	b				1										18" AFES	30.26 Lt SFP3 202+42.51	D-1		b
	c		8										S		18" PC	30.26 Lt SFP3 202+42.51 TO 24.35 Lt SFP3 202+42.54±	D-1		c
	d										1				REMOVE 18" FES	24.35± Lt SFP3 202+42.54±	D-1		d
	e			1											CONCRETE COLLAR	24.35± Lt SFP3 202+42.54±	D-1		e
	f										1				REMOVE 18" FES	23.47± Rt SFP3 202+42.85±	D-1		f
	g			1											CONCRETE COLLAR	23.47± Rt SFP3 202+42.85±	D-1		g
	h		7										S		18" APC	23.47± Rt SFP3 202+42.85± TO 29.78 Rt SFP3 202+42.89	D-1		h
	i				1										18" AFES	29.78 Rt SFP3 202+42.89	D-1		i
	j					6.1		130							RSP	35.92 Rt SFP3 202+42.93	D-1		j
2	a									10					REMOVE PORTION OF 12" STEEL CULVERT	37.42± Lt SFP3 202+45.75± TO 26.77± Lt SFP3 202+45.30±	D-1	2	a
3	a									58					REMOVE 18" CMP	27.89± Rt SFP3 202+99.0± TO 26.82± Rt SFP3 203+57.25±	D-1	3	a
4	a					3.0		80							RSP	39.31 Rt SFP3 203+54.30	D-1	4	a
	b				1										18" AFES	39.31 Rt SFP3 203+54.30	D-1		b
	c		39										S	10	18" APC w/Conc BACKFILL (FAST SETTING)	39.31 Rt SFP3 203+54.30 TO 38.26 Rt SFP3 203+15.4	D-1		c
	d				1										18" AFES	38.26 Rt SFP3 203+15.4	D-1		d
	e					3.0		140							RSP	38.26 Rt SFP3 203+15.4	D-1		e
5	a					7.3		155							RSP	38.68 Lt SFP3 205+80	D-1	5	a
	b				1										18" AFES	33.13 Lt SFP3 205+80	D-1		b
	c		71										S	33	18" APC w/Conc BACKFILL (FAST SETTING)	33.13 Lt SFP3 205+80 TO 36.82 Rt SFP3 205+80	D-1		c
	d				1										18" AFES	36.82 Rt SFP3 205+80	D-1		d
	e					6.6		140							RSP	42.82 Rt SFP3 205+80	D-1		e
6	a									60					REMOVE 18" CMP	25.29± Rt SFP3 206+10.15± TO 25.69± Rt SFP3 206+69.8±	D-1	6	a
7	a										1				REMOVE 18" FES	22.73± Lt SFP3 206+83.6±	D-1	7	a
	b								46						ABANDON 18" CULVERT	22.73± Lt SFP3 206+83.6± 23.1± Rt SFP3 206+82.6±	D-1		b
	c										1				REMOVE 18" FES	23.10± Lt SFP3 206+82.6±	D-1		c
8	a					7.8		165							RSP	46.87 Lt SFP3 209+92.37	D-1	8	a
	b				1										18" AFES	41.06 Lt SFP3 209+92.46	D-1		b
	c	15											S		18" APC	41.06 Lt SFP 3 209+92.46 TO 35.79± Lt SFP3 209+92.53	D-1		c
	d											1			REMOVE HW	35.79± Lt SFP3 209+92.53±	D-1		d
	e			1											CONCRETE COLLAR	35.79± Lt SFP3 209+92.53±	D-1		e
	f											1			REMOVE HW	31.66± Rt SFP3 209+93.48±	D-1		f
	g			1											CONCRETE COLLAR	31.66± Rt SFP3 209+93.48±	D-1		g
	h	9											S		18" APC	31.66± Rt SFP3 209+93.48± TO 40.12 Rt SFP3 209+93.60	D-1		h
	i				1										18" AFES	40.12 Rt SFP3 209+93.60	D-1		i
	j						35	700							RSP	46.30 Rt SFP3 209+93.68	D-1		j
SHEET TOTAL		24	125	4	8	42	35	1650	46	128	4	2		43	SHEET TOTAL				

(N) - NOT A separate PAY ITEM. FOR INFORMATION ONLY.

DRAINAGE QUANTITIES DQ-1

STATE OF CALIFORNIA - DEPARTMENT OF TRANSPORTATION
Caltrans HYDRAULICS

FUNCTIONAL SUPERVISOR: MORTEZA AZIMI

CALCULATED-DESIGNED BY | CHECKED BY

REVISED BY: A | DATE REVISED: A

LAST REVISION 11-23-10 | DATE PLOTTED => 31-JAN-2011 | TIME PLOTTED => 13:02

Dist	COUNTY	ROUTE	POST MILES TOTAL PROJECT	SHEET No.	TOTAL SHEETS
04	SCI	152	19.3/20.3	19	39

Parrirokh Abedi 5-28-09
REGISTERED CIVIL ENGINEER DATE

1-24-11
PLANS APPROVAL DATE

REGISTERED PROFESSIONAL ENGINEER
P. Abedi
No. 36025
Exp. 6-30-10
CIVIL
STATE OF CALIFORNIA

THE STATE OF CALIFORNIA OR ITS OFFICERS OR AGENTS SHALL NOT BE RESPONSIBLE FOR THE ACCURACY OR COMPLETENESS OF SCANNED COPIES OF THIS PLAN SHEET.

FOR COMPLETE RIGHT OF WAY AND ACCURATE ACCESS DATA, SEE RIGHT OF WAY RECORD MAPS AT DISTRICT OFFICE.

LEGEND:

OVERHEAD ELECTRIC AND TELEPHONE LINES (PG&E AND AT&T)

SANTA CLARA VALLEY WATER DISTRICT (SCUWD) WATER LINE

POLES JOINTLY OWNED BY PG&E AND AT&T

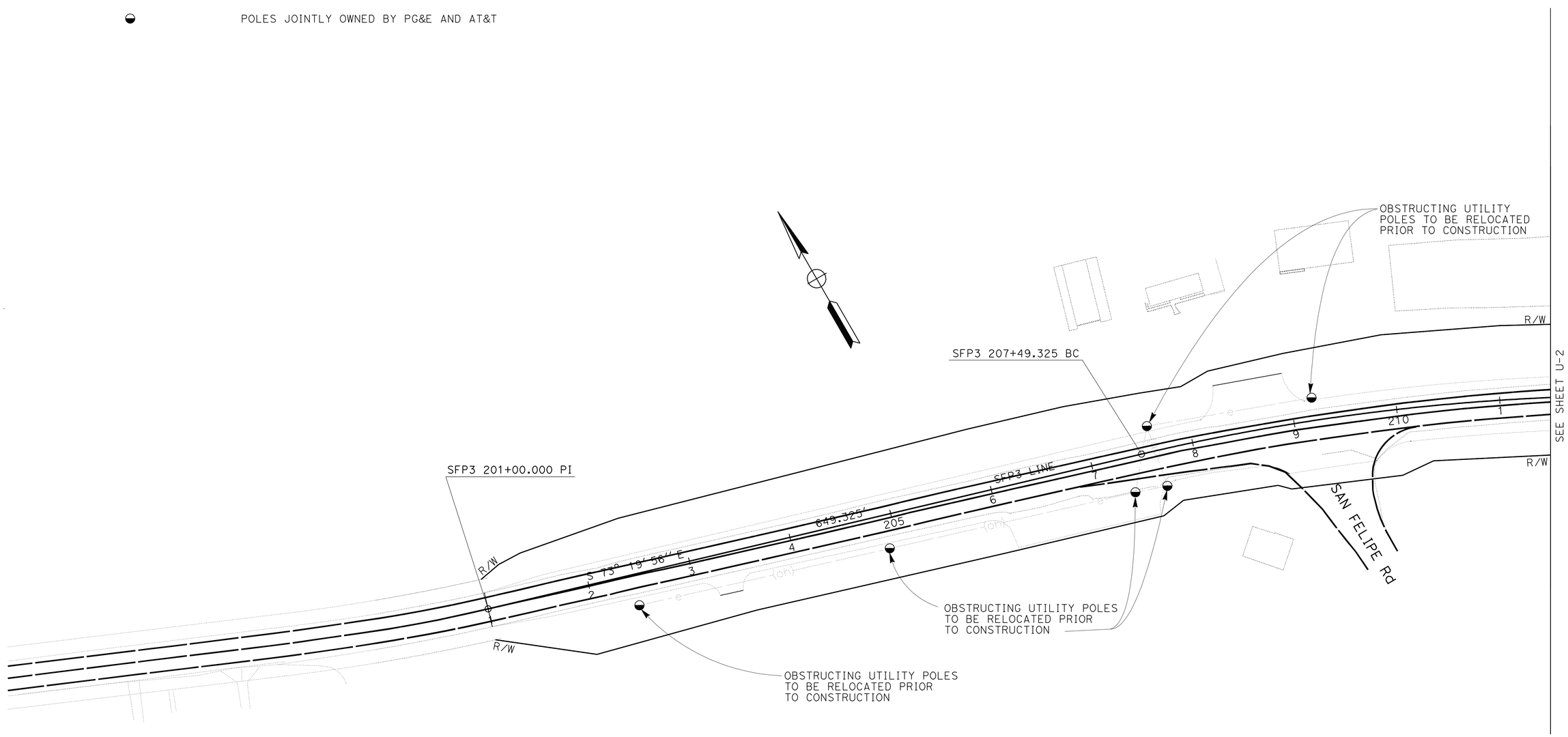

UTILITY PLAN

SCALE: 1" = 50'

THIS PLAN ACCURATE FOR UTILITY WORK ONLY

U-1

STATE OF CALIFORNIA - DEPARTMENT OF TRANSPORTATION
Caltrans
DESIGN

FUNCTIONAL SUPERVISOR: MORTEZA AZIMI
CALCULATED-DESIGNED BY: HOSSAIN RAZAWI
CHECKED BY: PARRIROKH ABEDI
REVISED BY: PA
DATE REVISED: 04/09

LAST REVISION DATE PLOTTED => 31-JAN-2011
04-23-09 TIME PLOTTED => 13:04

Dist	COUNTY	ROUTE	POST MILES TOTAL PROJECT	SHEET No.	TOTAL SHEETS
04	SCI	152	19.3/20.3	20	39

Parrirokh Abedi 5-28-09
REGISTERED CIVIL ENGINEER DATE

1-24-11
PLANS APPROVAL DATE

REGISTERED PROFESSIONAL ENGINEER
P. Abedi
No. 36025
Exp. 6-30-10
CIVIL
STATE OF CALIFORNIA

THE STATE OF CALIFORNIA OR ITS OFFICERS OR AGENTS SHALL NOT BE RESPONSIBLE FOR THE ACCURACY OR COMPLETENESS OF SCANNED COPIES OF THIS PLAN SHEET.

FOR COMPLETE RIGHT OF WAY DATA,
SEE RIGHT OF WAY RECORD MAPS
AT DISTRICT OFFICE.

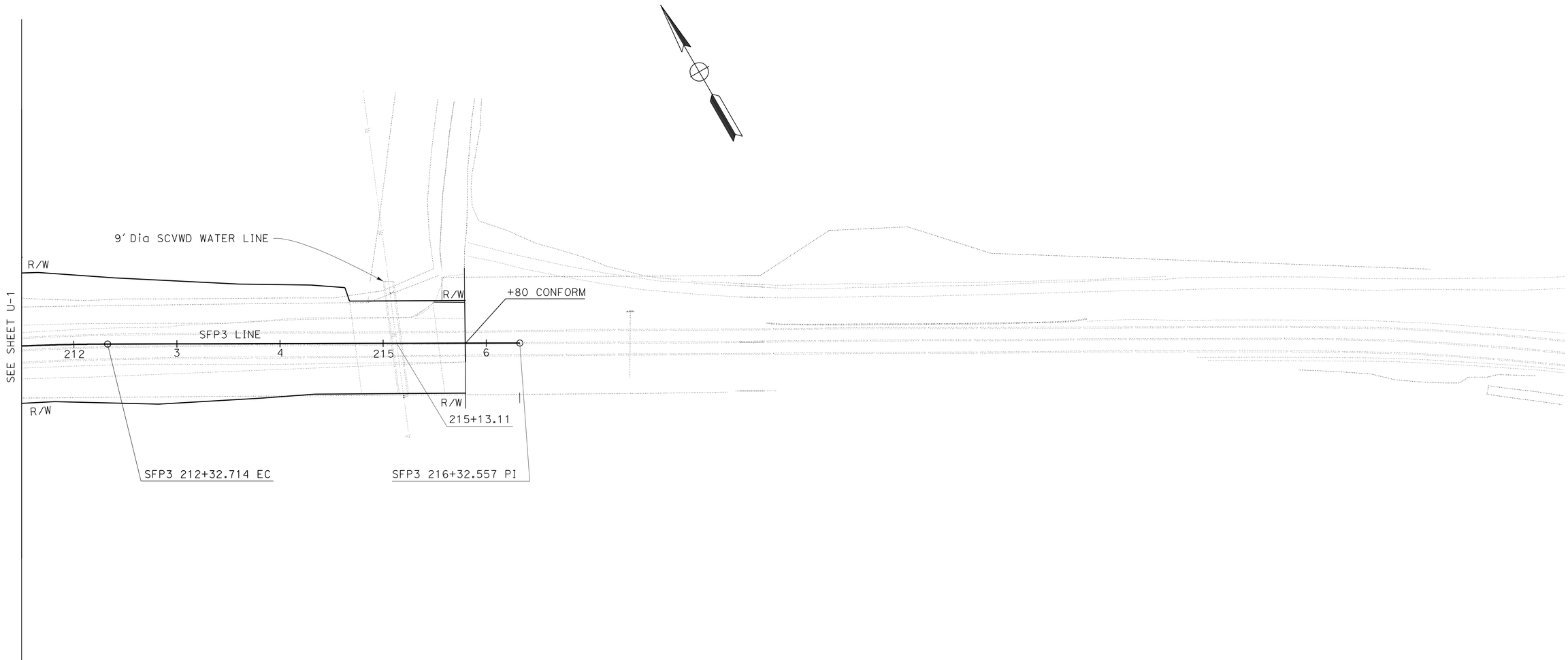

FOR NOTES, ABBREVIATIONS
&/OR LEGEND, SEE SHEET U-1

THIS PLAN ACCURATE FOR
UTILITY WORK ONLY

UTILITY PLAN
SCALE: 1" = 50'

U-2

CALCULATED-DESIGNED BY	HOSSAIN RAZAWI
CHECKED BY	PARRIROKH ABEDI
REVISED BY	PA
DATE REVISED	04/09
FUNCTIONAL SUPERVISOR	MORTEZA AZIMI

STATE OF CALIFORNIA - DEPARTMENT OF TRANSPORTATION
Caltrans
DESIGN

LAST REVISION 06-02-09 | DATE PLOTTED => 31-JAN-2011 | TIME PLOTTED => 13:04

Dist	COUNTY	ROUTE	POST MILES TOTAL PROJECT	SHEET No.	TOTAL SHEETS
04	SCI	152	19.3/20.3	21	39

REGISTERED CIVIL ENGINEER 6-2-09 DATE

1-24-11
PLANS APPROVAL DATE

REGISTERED PROFESSIONAL ENGINEER Jerilyn L. Struven No. 49964 Exp. 12-31-10 CIVIL STATE OF CALIFORNIA

THE STATE OF CALIFORNIA OR ITS OFFICERS OR AGENTS SHALL NOT BE RESPONSIBLE FOR THE ACCURACY OR COMPLETENESS OF SCANNED COPIES OF THIS PLAN SHEET.

NOTE

SIGN LOCATIONS SHOWN ARE APPROXIMATE ONLY.
EXACT LOCATIONS TO BE DETERMINED BY THE ENGINEER.

LEGEND

No. CONSTRUCTION AREA SIGN NUMBER

STATIONARY MOUNTED CONSTRUCTION AREA SIGNS

SIGN No.	MUTCD CODE	MESSAGE	PANEL SIZE	NUMBER OF POST AND SIZE	No. OF SIGNS (N)
1	W20-1	ROAD WORK AHEAD	48" x 48"	1- 4" x 6"	3
2	G20-2	END ROAD WORK	48" x 24"	1- 4" x 4"	3
3	C-40	TRAFFIC FINES DOUBLE IN CONSTRUCTION AREA	72" x 36"	2- 4" x 6"	2
4	R2-4(CA)	45 SPEED ZONE AHEAD	36" x 45"	1- 4" x 4"	2
5	R2-1	SPEED LIMIT 45	36" x 48"	1- 4" x 4"	2

(N) = NOT A SEPARATE PAY ITEM, FOR INFORMATION ONLY

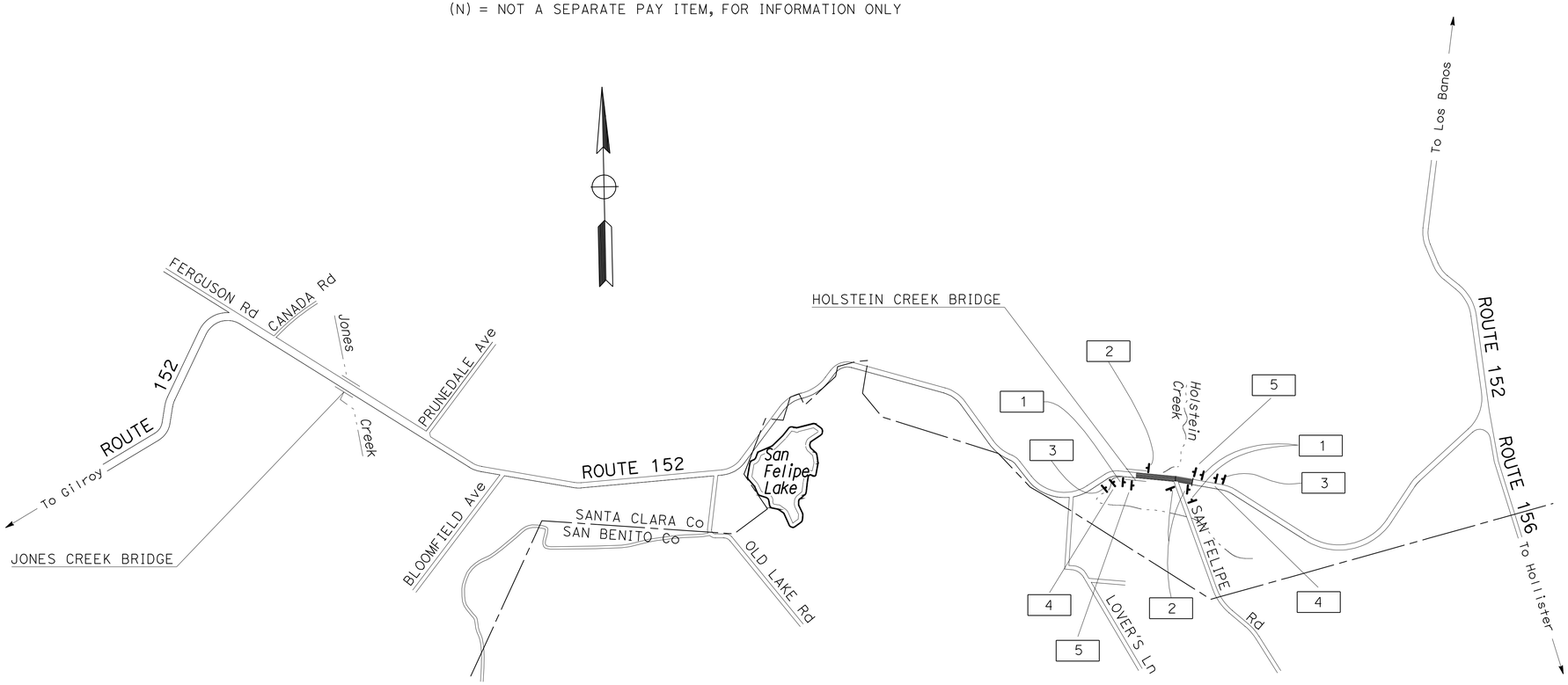

CONSTRUCTION AREA SIGNS

NO SCALE

THIS PLAN ACCURATE FOR
CONSTRUCTION AREA SIGN WORK ONLY

CS-1

STATE OF CALIFORNIA - DEPARTMENT OF TRANSPORTATION
Caltrans
TRAFFIC

FUNCTIONAL SUPERVISOR: ROLAND AU-YEUNG
CALCULATED-DESIGNED BY: ST
CHECKED BY: ST
REVISED BY
DATE REVISED

LAST REVISION 04-14-09
DATE PLOTTED => 31-JAN-2011
TIME PLOTTED => 13:02

Dist	COUNTY	ROUTE	POST MILES TOTAL PROJECT	SHEET No.	TOTAL SHEETS
04	SCI	152	19.3/20.3	22	39

Parrirokh Abedi 5-28-09
REGISTERED CIVIL ENGINEER DATE

1-24-11
PLANS APPROVAL DATE

REGISTERED PROFESSIONAL ENGINEER P. Abedi No. 36025 Exp. 6-30-12 CIVIL STATE OF CALIFORNIA

THE STATE OF CALIFORNIA OR ITS OFFICERS OR AGENTS SHALL NOT BE RESPONSIBLE FOR THE ACCURACY OR COMPLETENESS OF SCANNED COPIES OF THIS PLAN SHEET.

FOR COMPLETE RIGHT OF WAY AND ACCURATE ACCESS DATA, SEE RIGHT OF WAY RECORD MAPS AT DISTRICT OFFICE.

NOTES:

1. ALL DRIVEWAYS TO REMAIN OPEN ALL THE TIME.
2. ALL POST MILE MARKERS TO BE PRESERVED & REINSTALLED
3. EASTBOUND WIDENING MUST BE COMPLETED PRIOR TO WESTBOUND WIDENING.
4. EXACT LOCATION OF TFESA TO BE DETERMINED BY THE ENGINEER.

ABBREVIATION:

TFESA TEMPORARY FENCE - TEMPORARY FENCE ENVIRONMENTALLY SENSITIVE AREA AND TEMPORARY PERIMETER BARRIER

LEGEND:

- CONSTRUCTION AREA
- BR (No.) BEGIN REMOVAL PAVEMENT DELINEATION
- ER (No.) END REMOVAL PAVEMENT DELINEATION
- BT (No.) BEGIN TEMPORARY TRAFFIC STRIPE (PAINT)
- ET (No.) END TEMPORARY TRAFFIC STRIPE (PAINT)
- TEMPORARY RAILING (TYPE K)
- TEMPORARY RAILING (TYPE K)
- TFESA

SECTION A-A
NO SCALE

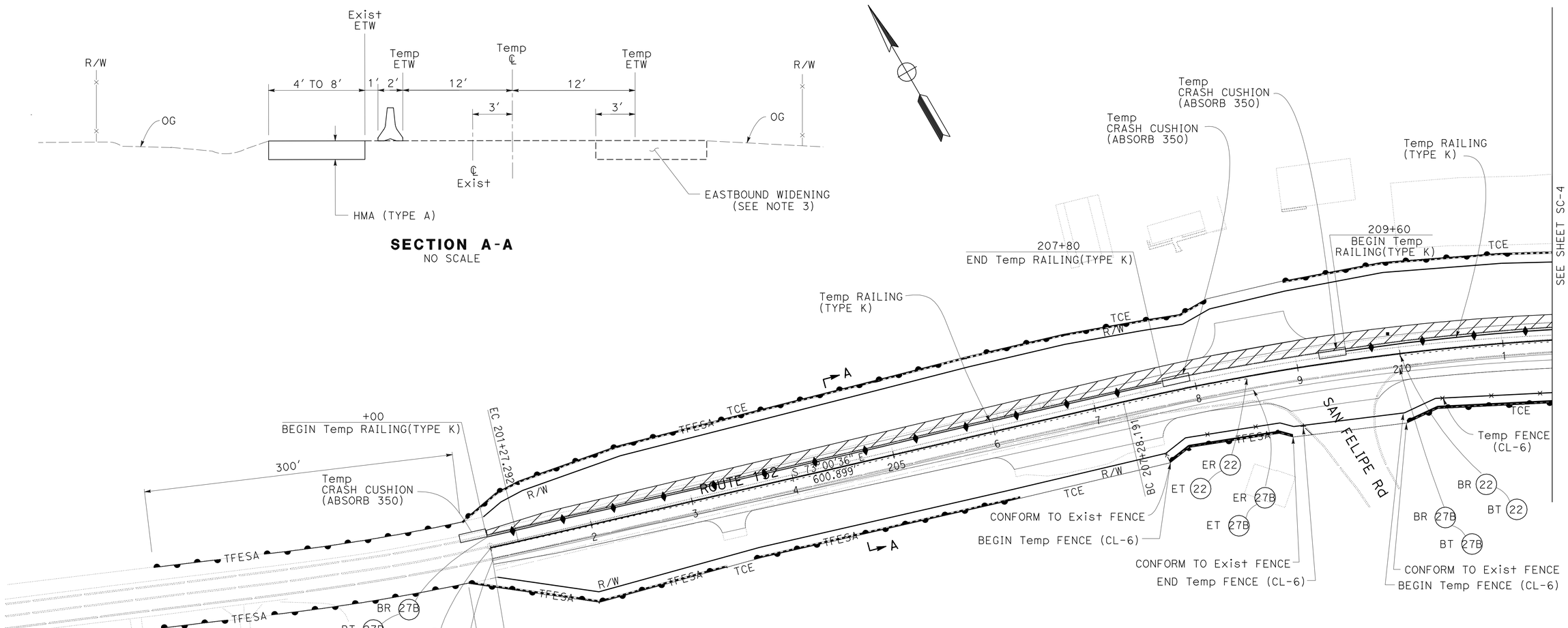

STAGE CONSTRUCTION AND TRAFFIC HANDLING PLAN

SCALE: 1" = 50′

THIS PLAN ACCURATE FOR STAGE CONSTRUCTION WORK ONLY

SC-1

STATE OF CALIFORNIA - DEPARTMENT OF TRANSPORTATION
Caltrans®
DESIGN

FUNCTIONAL SUPERVISOR: MORTEZA AZIMI
CALCULATED-DESIGNED BY: PARRIROKH ABEDI
CHECKED BY
REVISED BY: PA
DATE REVISED: 05/09

LAST REVISION 11-22-10 | DATE PLOTTED => 31-JAN-2011 | TIME PLOTTED => 13:02

BORDER LAST REVISED 4/11/2008 | RELATIVE BORDER SCALE IS IN INCHES 0 1 2 3 | USERNAME => trmikesl | DGN FILE => 43a400ma001.dgn | CU 04229 | EA 3A4001

Dist	COUNTY	ROUTE	POST MILES TOTAL PROJECT	SHEET No.	TOTAL SHEETS
04	SCI	152	19.3/20.3	23	39

Parrirokh Abedi 5-28-09
REGISTERED CIVIL ENGINEER DATE

1-24-11
PLANS APPROVAL DATE

REGISTERED PROFESSIONAL ENGINEER
P. Abedi
No. 36025
Exp 6-30-12
CIVIL
STATE OF CALIFORNIA

THE STATE OF CALIFORNIA OR ITS OFFICERS OR AGENTS SHALL NOT BE RESPONSIBLE FOR THE ACCURACY OR COMPLETENESS OF SCANNED COPIES OF THIS PLAN SHEET.

FOR COMPLETE RIGHT OF WAY AND ACCURATE ACCESS DATA, SEE RIGHT OF WAY RECORD MAPS AT DISTRICT OFFICE.

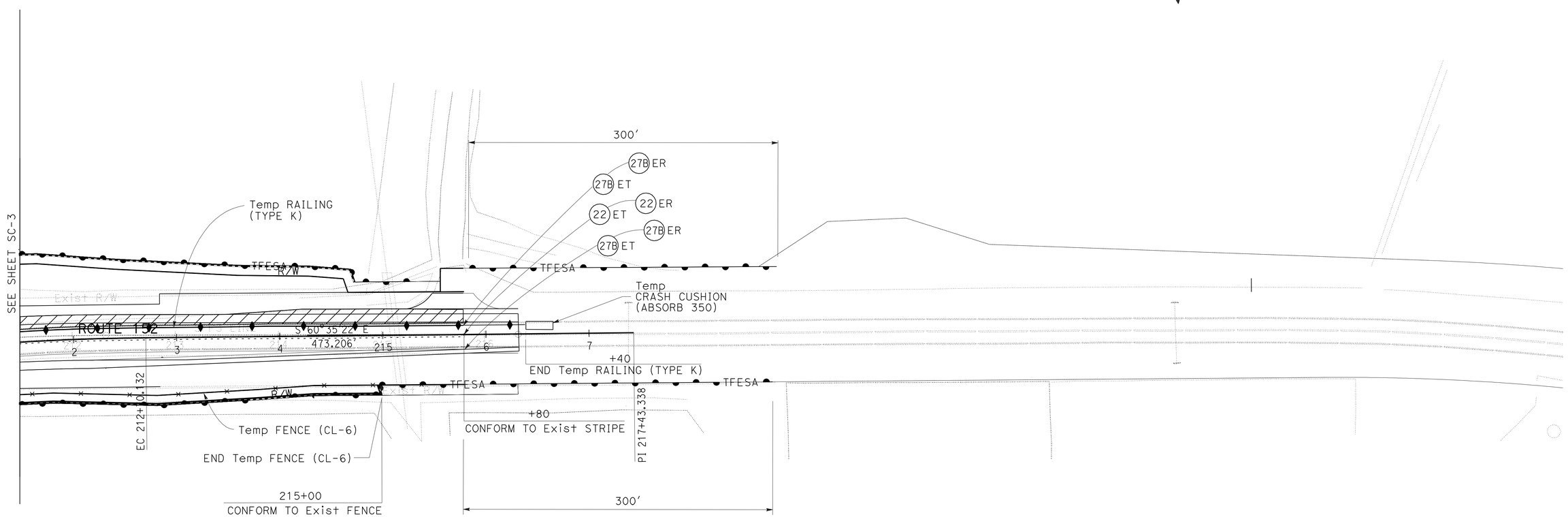

STAGE CONSTRUCTION AND TRAFFIC HANDLING PLAN

SCALE: 1" = 50'

FOR NOTES, ABBREVIATIONS &/OR LEGEND, SEE SHEET SC-1

THIS PLAN ACCURATE FOR STAGE CONSTRUCTION WORK ONLY

SC-2

REVISED BY	PA
DATE REVISED	05/09
CALCULATED-DESIGNED BY	TOMONORI MORI
CHECKED BY	PARRIROKH ABEDI
FUNCTIONAL SUPERVISOR	MORTEZA AZIMI

STATE OF CALIFORNIA - DEPARTMENT OF TRANSPORTATION
Caltrans
DESIGN

LAST REVISION 11-22-10
DATE PLOTTED => 31-JAN-2011
TIME PLOTTED => 13:02

Dist	COUNTY	ROUTE	POST MILES TOTAL PROJECT	SHEET No.	TOTAL SHEETS
04	SCI	152	19.3/20.3	24	39

Parrirokh Abedi 5-28-09
REGISTERED CIVIL ENGINEER DATE

1-24-11
PLANS APPROVAL DATE

REGISTERED PROFESSIONAL ENGINEER
P. Abedi
No. 36025
Exp. 6-30-12
CIVIL
STATE OF CALIFORNIA

THE STATE OF CALIFORNIA OR ITS OFFICERS OR AGENTS SHALL NOT BE RESPONSIBLE FOR THE ACCURACY OR COMPLETENESS OF SCANNED COPIES OF THIS PLAN SHEET.

FOR COMPLETE RIGHT OF WAY AND ACCURATE ACCESS DATA, SEE RIGHT OF WAY RECORD MAPS AT DISTRICT OFFICE.

NOTES:

1. ALL LANES 12′ WIDE UNLESS NOTED.
2. EDGELINE OFFSET 2′ FROM CENTERLINE UNLESS NOTED.

LEGEND:

(No.) PAVEMENT DELINEATION DETAIL

CHANGE OF PAVEMENT DELINEATION DETAIL

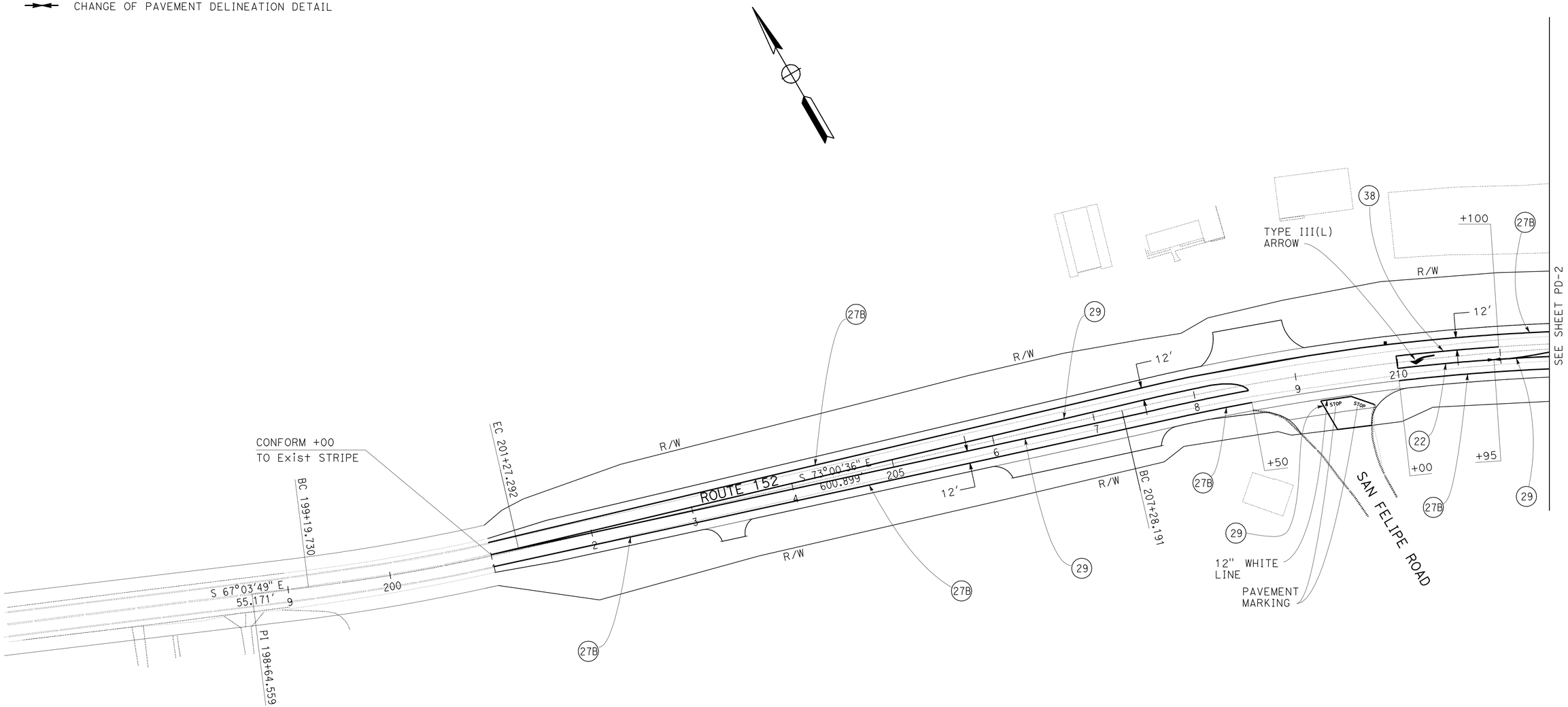

PAVEMENT DELINEATION PLAN

SCALE: 1" = 50′

FOR NOTES, ABBREVIATIONS &/OR LEGEND, SEE SHEET PD-1

THIS PLAN ACCURATE FOR PAVEMENT DELINEATION WORK ONLY

PD-1

STATE OF CALIFORNIA - DEPARTMENT OF TRANSPORTATION
Caltrans®
DESIGN

FUNCTIONAL SUPERVISOR: MORTEZA AZIMI
CALCULATED-DESIGNED BY: TOMONORI MORI
CHECKED BY: PARRIROKH ABEDI
REVISED BY: PA
DATE REVISED: 04/09

LAST REVISION 12-02-10
DATE PLOTTED => 31-JAN-2011
TIME PLOTTED => 13:02

Dist	COUNTY	ROUTE	POST MILES TOTAL PROJECT	SHEET No.	TOTAL SHEETS
04	SCI	152	19.3/20.3	25	39

Parrirokh Abedi 5-28-09
REGISTERED CIVIL ENGINEER DATE

1-24-11
PLANS APPROVAL DATE

REGISTERED PROFESSIONAL ENGINEER
P. Abedi
No. 36025
Exp. 6-30-12
CIVIL
STATE OF CALIFORNIA

THE STATE OF CALIFORNIA OR ITS OFFICERS OR AGENTS SHALL NOT BE RESPONSIBLE FOR THE ACCURACY OR COMPLETENESS OF SCANNED COPIES OF THIS PLAN SHEET.

FOR COMPLETE RIGHT OF WAY DATA,
SEE RIGHT OF WAY RECORD MAPS
AT DISTRICT OFFICE.

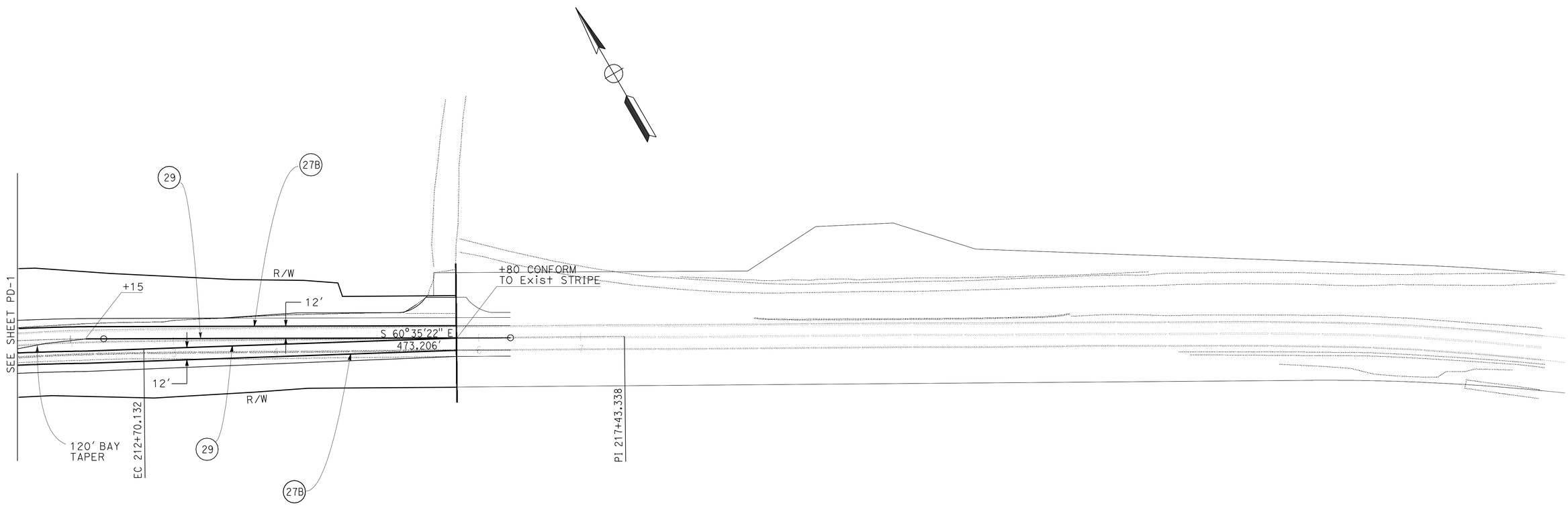

PAVEMENT DELINEATION PLAN

SCALE: 1" = 50'

FOR NOTES, ABBREVIATIONS
&/OR LEGEND, SEE SHEET PD-1

THIS PLAN ACCURATE FOR
PAVEMENT DELINEATION WORK ONLY

PD-2

STATE OF CALIFORNIA - DEPARTMENT OF TRANSPORTATION
Caltrans®
DESIGN

FUNCTIONAL SUPERVISOR: MORTEZA AZIMI
CALCULATED-DESIGNED BY: TOMONORI MORI
CHECKED BY: PARRIROKH ABEDI
REVISED BY: PA
DATE REVISED: 04/09

LAST REVISION
DATE PLOTTED => 31-JAN-2011
TIME PLOTTED => 13:03
12-02-10

BORDER LAST REVISED 4/11/2008
RELATIVE BORDER SCALE IS IN INCHES 0 1 2 3
USERNAME => trmikesi
DGN FILE => 43a400na002.dgn
CU 04229
EA 3A4001

Dist	COUNTY	ROUTE	POST MILES TOTAL PROJECT	SHEET No.	TOTAL SHEETS
04	SCI	152	19.3/20.3	26	39

Parrokh Abedi 5-28-09
REGISTERED CIVIL ENGINEER DATE

1-24-11
PLANS APPROVAL DATE

REGISTERED PROFESSIONAL ENGINEER
P. Abedi
No. 36025
Exp. 6-30-12
CIVIL
STATE OF CALIFORNIA

THE STATE OF CALIFORNIA OR ITS OFFICERS OR AGENTS SHALL NOT BE RESPONSIBLE FOR THE ACCURACY OR COMPLETENESS OF SCANNED COPIES OF THIS PLAN SHEET.

PAVEMENT DELINEATION QUANTITIES

SHEET No.	STATION	DETAIL No.	PAVEMENT MARKER		THERMOPLASTIC TRAFFIC STRIPE			THERMOPLASTIC PAVEMENT MARKING		
			RETRO-REFLECTIVE (TYPE D)	RETRO-REFLECTIVE (TYPE G)	4'' WHITE	4'' YELLOW	8'' WHITE	TYPE III (L) ARROW	STOP	12" WHITE LINE
			EA		LF			SQFT		
PD-1	SFP3 201+00 TO 211+50	27B			1960					
	SFP3 201+00 TO 211+50	29	68			3260				
	SFP3 210+00 TO 211+00	22	8			190				
	SFP3 210+00 TO 211+00	38		4			100			
	SFP3 209+00 TO 211+50							42	44	54
PD-2	SFP3 211+50 TO 215+80	27B			860					
	SFP3 211+50 TO 215+80	29	36			1730				
SUBTOTAL			112	4	2820	5180	100	42	44	54
TOTAL			116		8000		100	140		

REMOVE EXISTING PAVEMENT DELINEATION

STATION	REMOVE PAVEMENT MARKER	REMOVE THERMOPLASTIC TRAFFIC STRIPE	
		4" WHITE	4" YELLOW
	EA	LF	
SFP3 201+00 TO 215+80	124	2860	2700

PAVEMENT DELINEATION QUANTITIES

PDQ-1

PA	04/09
REVISED BY	DATE REVISED
TOMONORI MORI	PARRIROKH ABEDI
CALCULATED-DESIGNED BY	CHECKED BY
FUNCTIONAL SUPERVISOR	MORTEZA AZIMI

STATE OF CALIFORNIA - DEPARTMENT OF TRANSPORTATION
Caltrans
DESIGN

LAST REVISION 06-06-09 | DATE PLOTTED => 31-JAN-2011 | TIME PLOTTED => 13:21

Dist	COUNTY	ROUTE	POST MILES TOTAL PROJECT	SHEET No.	TOTAL SHEETS
04	SCI	152	19.3/20.3	27	39

REGISTERED CIVIL ENGINEER 6-2-09 DATE

1-24-11
PLANS APPROVAL DATE

REGISTERED PROFESSIONAL ENGINEER Jerilyn L. Struven No. 49964 Exp. 12-31-10 CIVIL STATE OF CALIFORNIA

THE STATE OF CALIFORNIA OR ITS OFFICERS OR AGENTS SHALL NOT BE RESPONSIBLE FOR THE ACCURACY OR COMPLETENESS OF SCANNED COPIES OF THIS PLAN SHEET.

FOR COMPLETE RIGHT OF WAY DATA,
SEE RIGHT OF WAY RECORD MAPS
AT DISTRICT OFFICE.

NOTES:

1. EXACT LOCATION AND POSITION OF ROADSIDE SIGNS TO BE DETERMINED BY THE ENGINEER.
2. POST SIZE AND LENGTH ARE APPROXIMATE POST SIZE AND LENGTH TO BE DETERMINED BY THE ENGINEER.
3. ALL FEATURES IN DROPOUT ARE EXISTING.

LEGEND:

(No.) ROADSIDE SIGN NUMBER

▲ RELOCATE ROADSIDE SIGN

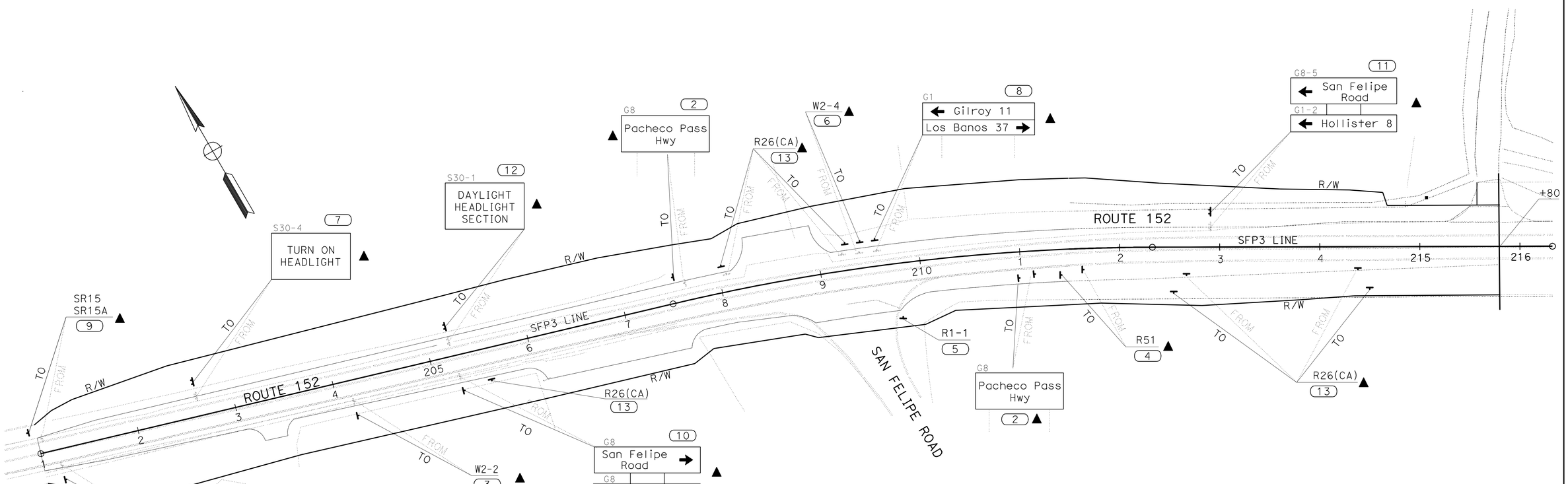

THIS PLAN ACCURATE FOR SIGN WORK ONLY

FOR NOTES, ABBREVIATIONS &/OR LEGEND, SEE SHEET S-1

SIGN PLAN
NO SCALE

S-1

REVISED BY	DATE REVISED
ST	4/09

CALCULATED-DESIGNED BY: SHARI TALAI
CHECKED BY: JERILYN STRUVEN

FUNCTIONAL SUPERVISOR: ROLAND AU YEUNG

STATE OF CALIFORNIA - DEPARTMENT OF TRANSPORTATION
Caltrans
TRAFFIC

LAST REVISION 04-30-09 | DATE PLOTTED => 31-JAN-2011 | TIME PLOTTED => 13:04

Dist	COUNTY	ROUTE	POST MILES TOTAL PROJECT	SHEET No.	TOTAL SHEETS
04	SCI	152	19.3/20.3	28	39

REGISTERED CIVIL ENGINEER DATE 6-2-09

1-24-11
PLANS APPROVAL DATE

REGISTERED PROFESSIONAL ENGINEER
Jerilyn L. Struven
No. 49964
Exp. 12-31-10
CIVIL
STATE OF CALIFORNIA

THE STATE OF CALIFORNIA OR ITS OFFICERS OR AGENTS SHALL NOT BE RESPONSIBLE FOR THE ACCURACY OR COMPLETENESS OF SCANNED COPIES OF THIS PLAN SHEET.

ROADSIDE SIGN QUANTITIES

SIGN No.	CODE	RELOCATE ROADSIDE SIGNS	
		ONE POST	TWO POST
1	R50	1	-
2	G8		2
3	W2-2	1	-
4	R51	1	-
5	R1-1	1	-
6	W2-4	1	-
7	S30-4	-	1
8	G1	-	1
9	SR15	1	-
	SR15A		
10	G8	-	1
	G8		
11	G8-5	-	1
	G1-2		
12	S30-1	-	1
13	R26(CA)	5	-
TOTAL		11	7

STATE OF CALIFORNIA - DEPARTMENT OF TRANSPORTATION
Caltrans
TRAFFIC

FUNCTIONAL SUPERVISOR: ROLAND AU YEUNG
CALCULATED-DESIGNED BY: JERILYN STRUVEN
CHECKED BY: SHARI TALAI
REVISED BY: ST
DATE REVISED: 4/09

SIGN QUANTITIES

SQ-1

LAST REVISION 00-00-00
DATE PLOTTED => 31-JAN-2011
TIME PLOTTED => 13:03

Dist	COUNTY	ROUTE	POST MILES TOTAL PROJECT	SHEET No.	TOTAL SHEETS
04	SCI	152	19.3/20.3	29	39

Parrirokh Abedi 5-28-09
REGISTERED CIVIL ENGINEER DATE

1-24-11
PLANS APPROVAL DATE

REGISTERED PROFESSIONAL ENGINEER
P. Abedi
No. 36025
Exp. 6-30-12
CIVIL
STATE OF CALIFORNIA

THE STATE OF CALIFORNIA OR ITS OFFICERS OR AGENTS SHALL NOT BE RESPONSIBLE FOR THE ACCURACY OR COMPLETENESS OF SCANNED COPIES OF THIS PLAN SHEET.

FENCE QUANTITIES

SHEET No.	STATION	REMOVE FENCE	FENCE (TYPE WM METAL POST)
		FT	
L-1	SFP3 201+00 TO 211+50	1770	1510
L-2	SFP3 211+50 TO 215+80	830	830
TOTAL		2600	2340

ROADWAY QUANTITIES

STATION	HOT MIX ASPHALT (TYPE A)	COLD PLANE ASPHALT CONCRETE PAVEMENT		TACK COAT	PAVEMENT REINFORCING FABRIC
		0.15' Max DEPTH	0.25' Max DEPTH		
	TON	SQYD	SQYD	TON	SQYD
SFP3 201+00 TO 215+80	5200	140	2400	12	5570
TOTAL	5200	2540		12	5570

STAGE CONSTRUCTION QUANTITIES

SHEET No.	STATION	TEMPORARY FENCE (TYPE CL-6)	TEMPORARY RAILING (TYPE K)	TEMPORARY CRASH CUSHION MODULE	TEMPORARY TRAFFIC STRIPE (PAINT)		TEMPORARY PAVEMENT MARKER
				ABSORB 350	22	27B	
		LF	LF	EA	LF	LF	EA
SC-1	SFP3 210+00 TO 211+50	270	870	3	900	1780	75
SC-2	SFP3 211+50 TO 215+80	430	350	1	430	860	35
	TOTAL	700	1220	4	1330	2640	110

EARTHWORK

STATION	ROADWAY EXCAVATION	EMBANKMENT (N)
	CY	
SFP3 201+00 TO 215+80	2800	520
TOTAL	2800	520

(N) = NOT A SEPARATE PAY ITEM, FOR INFORMATION ONLY

ENVIRONMENTALLY SENSITIVE AREA FENCE

SHEET No.	STATION	TEMPORARY FENCE (WILDLIFE EXCLUSION)	TEMPORARY SILT FENCE	TEMPORARY FENCE (TYPE ESA)
		LF		
SC-1 SC-2	SFP3 201+00 TO 215+80	3830	1000	2510
TOTAL		3830	1000	2510

SUMMARY OF QUANTITIES

Q-1

STATE OF CALIFORNIA - DEPARTMENT OF TRANSPORTATION
Caltrans
DESIGN
FUNCTIONAL SUPERVISOR: MORTEZA AZIMI
CALCULATED-DESIGNED BY: PARRIROKH ABEDI
CHECKED BY
REVISED BY: PA
DATE REVISED: 04/09

LAST REVISION 12-02-09
DATE PLOTTED => 31-JAN-2011
TIME PLOTTED => 13:03

DIST	COUNTY	ROUTE	POST MILES TOTAL PROJECT	SHEET NO.	TOTAL SHEETS
04	SCI	152	19.3/20.3	30	39

REGISTERED CIVIL ENGINEER

June 6, 2008
PLANS APPROVAL DATE

REGISTERED PROFESSIONAL ENGINEER
Donald E. Howe
No. C46402
Exp. 3-31-09
CIVIL
STATE OF CALIFORNIA

The State of California or its officers or agents shall not be responsible for the accuracy or completeness of electronic copies of this plan sheet.

To accompany plans dated 1-24-11

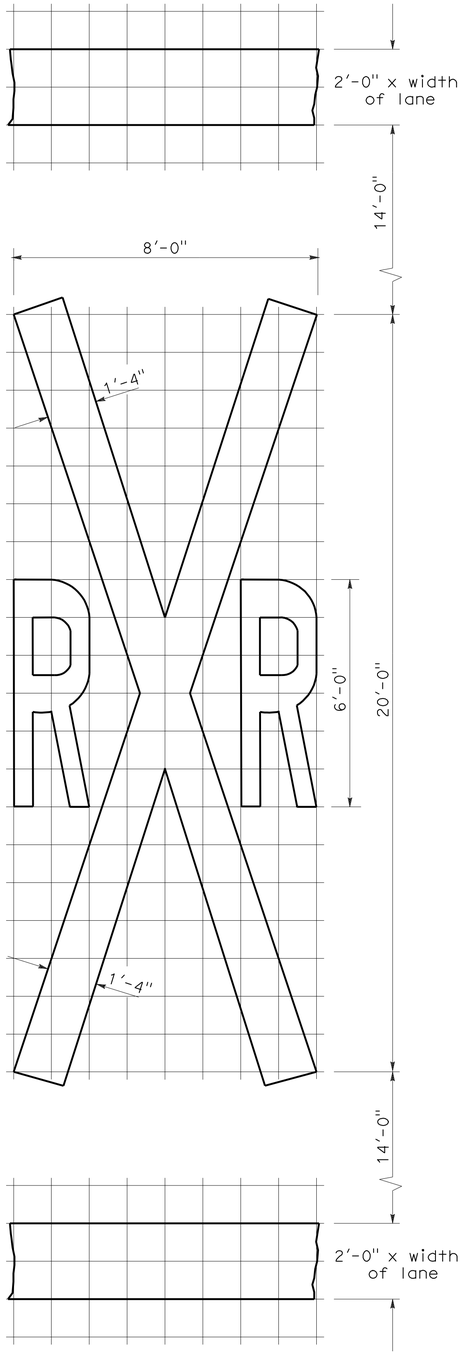

RAILROAD CROSSING SYMBOL

✳70 sq ft DOES NOT INCLUDE THE 2'-0" x VARIABLE WIDTH TRANSVERSE LINES.

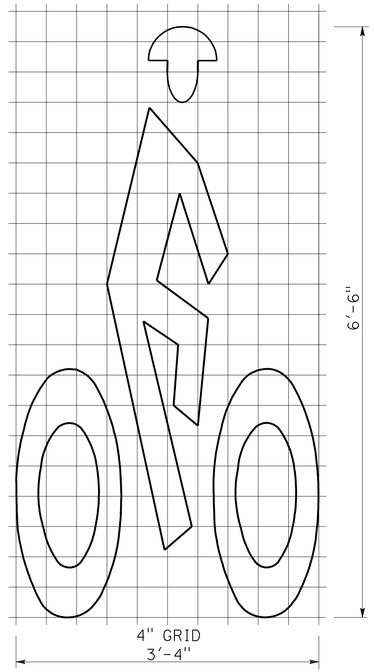

BIKE LANE SYMBOL

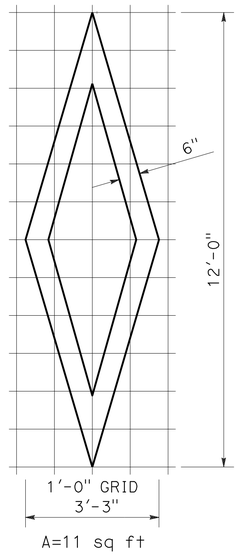

DIAMOND SYMBOL

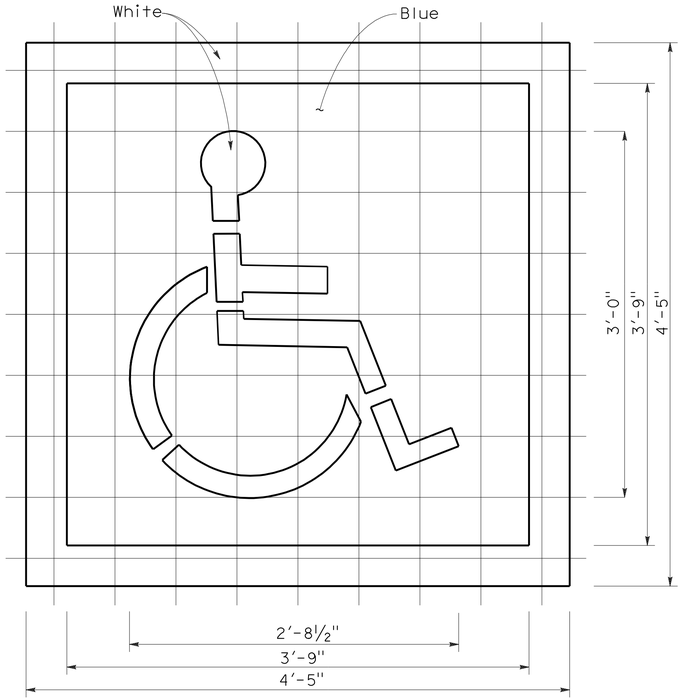

INTERNATIONAL SYMBOL OF ACCESSIBILITY MARKING

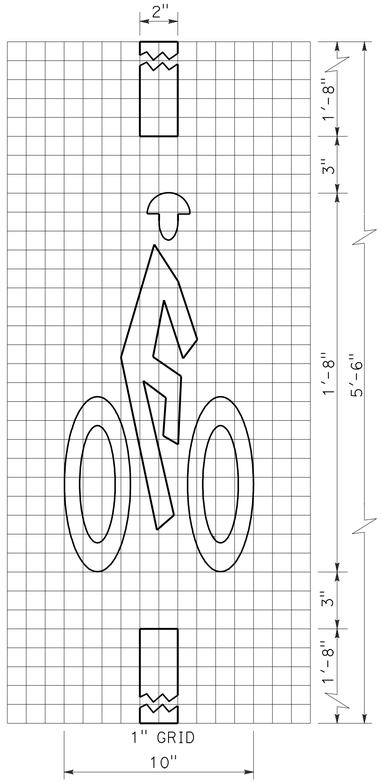

BICYCLE LOOP DETECTOR SYMBOL

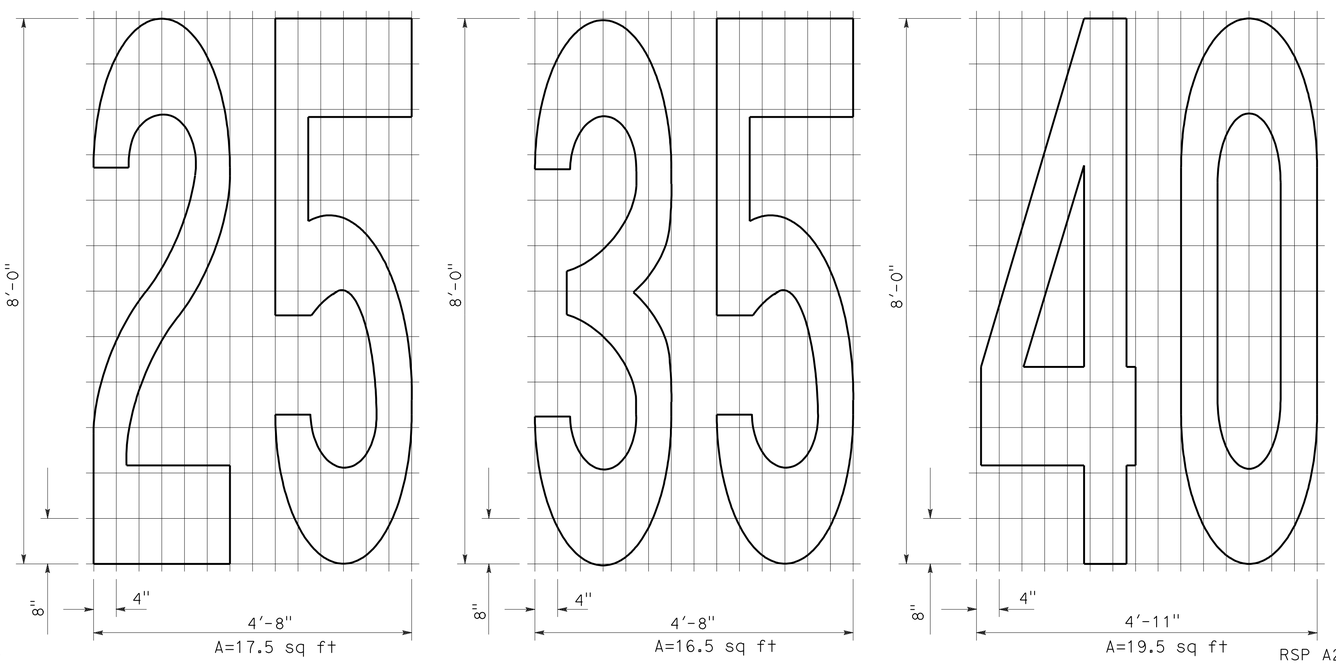

NUMERALS

NOTE:

1. Minor variations in dimensions may be accepted by the Engineer.

STATE OF CALIFORNIA
DEPARTMENT OF TRANSPORTATION

PAVEMENT MARKINGS SYMBOLS AND NUMERALS

NO SCALE

RSP A24C DATED JUNE 6, 2008 SUPERSEDES STANDARD PLAN A24C DATED MAY 1, 2006 - PAGE 11 OF THE STANDARD PLANS BOOK DATED MAY 2006.

REVISED STANDARD PLAN RSP A24C

2006 REVISED STANDARD PLAN RSP A24C

5-27-08

DIST	COUNTY	ROUTE	POST MILES TOTAL PROJECT	SHEET NO.	TOTAL SHEETS
04	SCI	152	19.3/20.3	31	39

REGISTERED CIVIL ENGINEER

November 17, 2006
PLANS APPROVAL DATE

REGISTERED PROFESSIONAL ENGINEER Dallas Forester No. C37765 Exp. 12-31-06 CIVIL STATE OF CALIFORNIA

The State of California or its officers or agents shall not be responsible for the accuracy or completeness of electronic copies of this plan sheet.

To accompany plans dated 1-24-11

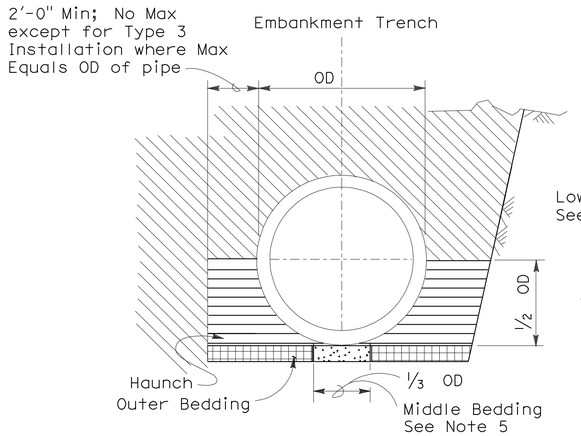

BACKFILL

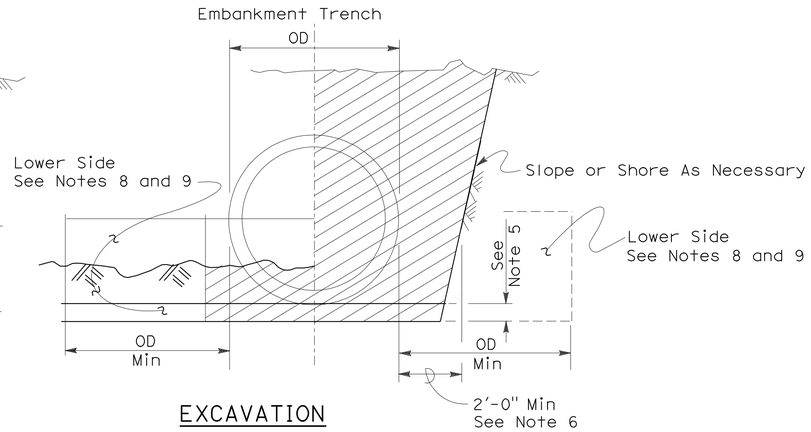

EXCAVATION

Roadway Embankment

Structure Backfill (Culvert) See Note 6

Structure Backfill (Culvert) See Note 6

Loose Backfill

Excavation Structure (Culvert)

TYPE 1 INSTALLATION:

The haunch and outer bedding shall be compacted to a minimum 90 percent relative compaction. In addition, the minimum sand equivalent in these areas shall be 30 and the maximum percentage passing the 75 μm sieve size shall be 12.

TYPE 2 INSTALLATION:

The haunch and outer bedding shall be compacted to a minimum 90 percent relative compaction. In addition, the minimum sand equivalent in these areas shall be 25.

TYPE 3 INSTALLATION:

The haunch and outer bedding shall be compacted to a minimum 85 percent relative compaction. 90 percent relative compaction will be required where the fill over the pipe is less than 4'-0" or 1/2 OD.

NOTES:

1. Unless otherwise shown on the plans or specified in the special provision, the Contractor shall have the option of selecting the class of RCP and the type of installation to be used, provided the height of cover does not exceed the value shown for the RCP selected.
   Example: 24" RCP culvert with maximum cover of 19'-0" the options are:
   a) Class III or stronger with Installation Type 1.
   b) Class III Special or stronger with Installation Type 2.
   c) Class IV Special or stronger with Installation Type 3.
   Cover is defined as the maximum vertical distance from top of the pipe to finished grade within the length of any given culvert.
2. The class of RCP and Installation Type selected shall be the same throughout the length of any given culvert.
3. The "length of any culvert" is defined as the culvert between:
   a) Successive drainage structure (inlets, junction boxes, headwalls, etc.).
   b) A drainage structure and the inlet or outlet end of the culvert.
   c) The inlet and outlet end of the culvert when there are no intervening drainage structures.
4. Oval and arch shaped RCP shall not be used.
5. 1/25 OD Min, not less than 3".
6. Slurry cement backfill may be substituted for backfill in the outer bedding and haunch areas. If slurry is used the outer and middle beddings shall be omitted. Prior to installation the soil under the middle 1/3 of the outside diameter of the pipe shall be softened by scarifying or other means to a minimum depth of 1/25 OD, but not less than 3". Where slurry cement backfill is used clear distance to trench wall may be reduced as set forth in Section 19-3.062 of the Standard Specifications.
7. Backfill shall be placed full width of excavation except where dimensions are shown for backfill width or thickness. Dimensions shown are minimums.
8. Lower side shall be suitable material as determined by the Engineer. Otherwise it shall be considered unsuitable as set forth in Section 19-2.02 of the Standard Specifications. See Note 9.
9. Where the pipe is placed in a trench, if the trench walls are sloped at 5 vertical to 1 horizontal or steeper for at least 90 percent of the trench height or up to not less than 12" from the grading plane, the firmness of the soil in the lower side need not be considered.
10. Non-reinforced precast concrete pipe sizes 3'-0" or smaller may be placed under installation Types 1, 2 or 3.

INSTALLATION TYPE 1

MINIMUM CLASS AND D-LOAD	COVER	
	108" Dia AND SMALLER	OVER 108" Dia
Class II 1000D	14.9'	12.9'
Class III 1350D	15.0' - 20.9'	13.0' - 18.9'
Class III Special 1700D	21.0' - 26.9'	19.0' - 24.9'
Class IV 2000D	27.0' - 31.9'	25.0' - 29.9'
Class IV Special 2500D	32.0' - 40.9'	30.0' - 38.9'
Class V 3000D	41.0' - 49.9'	39.0' - 46.9'
Class V Special 3600D	50.0' - 59.0'	47.0' - 58.0'

INSTALLATION TYPE 2

MINIMUM CLASS AND D-LOAD	COVER
Class II 1000D	9.9'
Class III 1350D	10.0'- 14.9'
Class III Special 1700D	15.0' - 19.9'
Class IV 2000D	20.0' - 24.9'
Class IV Special 2500D	25.0' - 31.9'
Class V 3000D	32.0' - 38.9'
Class V Special 3600D	39.0' - 47.0'

INSTALLATION TYPE 3

MINIMUM CLASS AND D-LOAD	COVER	
	48" Dia AND SMALLER	OVER 48" Dia
Class II 1000D	7.9'	5.9'
Class III 1350D	8.0' - 10.9'	6.0' - 8.9'
Class III Special 1700D	11.0' - 14.9'	9.0' - 12.9'
Class IV 2000D	15.0' - 17.9'	13.0' - 15.9'
Class IV Special 2500D	18.0' - 21.9'	16.0' - 19.9'
Class V 3000D	22.0' - 26.9'	20.0' - 24.9'
Class V Special 3600D	30.0' - 33.0'	25.0' - 31.0'

STATE OF CALIFORNIA
DEPARTMENT OF TRANSPORTATION

EXCAVATION AND BACKFILL CONCRETE PIPE CULVERTS

NO SCALE

RSP A62DA DATED NOVEMBER 17, 2006 SUPERSEDES STANDARD PLAN A62DA DATED MAY 1, 2006 - PAGE 20 OF THE STANDARD PLANS BOOK DATED MAY 2006.

REVISED STANDARD PLAN RSP A62DA

2006 REVISED STANDARD PLAN RSP A62DA

10-26-06

DIST	COUNTY	ROUTE	POST MILES TOTAL PROJECT	SHEET NO.	TOTAL SHEETS
04	SCI	152	19.3/20.3	32	39

Raymond Don Tsztoo
REGISTERED CIVIL ENGINEER

June 6, 2008
PLANS APPROVAL DATE

REGISTERED PROFESSIONAL ENGINEER
Raymond Don Tsztoo
No. C37332
Exp. 6-30-08
CIVIL
STATE OF CALIFORNIA

The State of California or its officers or agents shall not be responsible for the accuracy or completeness of electronic copies of this plan sheet.

To accompany plans dated 1-24-11

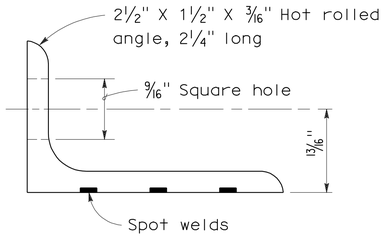

ANGLE

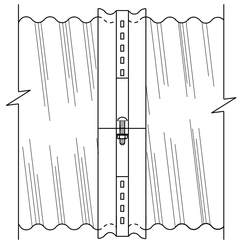

SIDE VIEW
ANGLE

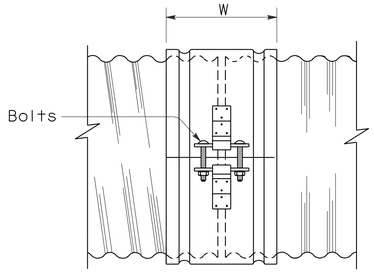

SIDE VIEW
SINGLE BAR AND STRAP

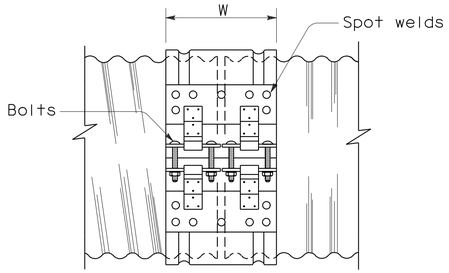

SIDE VIEW
DOUBLE BAR AND STRAP

NOTES:

1. All ferrous metal coupling band connection hardware shall be galvanized or electroplated in accordance with the Standard Specifications.
2. Dimensions and thicknesses shown are minimum.
3. Spot welds shall develop minimum required strength of strap.
4. Fillet welds of equivalent strength may be substituted for spot welds or rivets.
5. Dimension depends upon whether end condition is lips up or lips down.

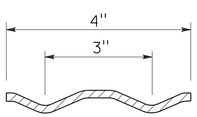

SECTION

H-4 HUGGER BAND

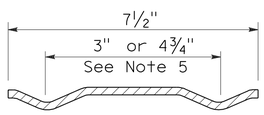

SECTION

H-7 HUGGER BAND

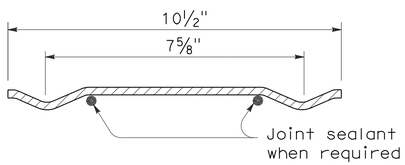

SECTION

H-10 HUGGER BAND

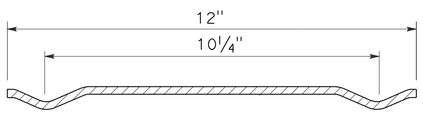

SECTION

H-12 HUGGER BAND

HUGGER COUPLING BANDS

STATE OF CALIFORNIA
DEPARTMENT OF TRANSPORTATION

CORRUGATED METAL PIPE COUPLING DETAILS No. 4 HUGGER COUPLING BANDS

NO SCALE

RSP D97D DATED JUNE 6, 2008 SUPERSEDES STANDARD PLAN D97D
DATED MAY 1, 2006 - PAGE 186 OF THE STANDARD PLANS BOOK DATED MAY 2006.

REVISED STANDARD PLAN RSP D97D

2006 REVISED STANDARD PLAN RSP D97D

3-24-08

DIST	COUNTY	ROUTE	POST MILES TOTAL PROJECT	SHEET NO.	TOTAL SHEETS
04	SCI	152	19.3/20.3	33	39

Raymond Don Tsztoo
REGISTERED CIVIL ENGINEER

June 6, 2008
PLANS APPROVAL DATE

REGISTERED PROFESSIONAL ENGINEER Raymond Don Tsztoo No. C37332 Exp. 6-30-08 CIVIL STATE OF CALIFORNIA

The State of California or its officers or agents shall not be responsible for the accuracy or completeness of electronic copies of this plan sheet.

ANNULAR AND HELICAL PROFILE

COUPLING TYPE	PIPE CORRUGATION	PIPE SIZE	W OR A	PIPE WALL THICKNESS CSP	PIPE WALL THICKNESS CAP	BAND THICKNESS CSP	BAND THICKNESS CAP	BAR AND STRAP (CSP ONLY) STRAP THICKNESS	BOLTS Dia	BAR Dia	BAR YIELD STRENGTH	ANGLE DIMENSIONS CSP	ANGLE DIMENSIONS CAP	BOLTS (No.- Dia) CSP	BOLTS (No.- Dia) CAP	RIVETS ANGLE TO BAND CSP	RIVETS ANGLE TO BAND CAP	SPOT WELDS ANGLE TO BAND CSP
TWO PIECE INTEGRAL FLANGE	1½′ × ¼"	6"-10"	7"	0.052"-0.079"	0.048"-0.060"	0.052"	0.060"							2-⅜"	2-⅜"			
		12"-18"	7"	0.052"-0.079"		0.064"								2-½"				
	2⅔" × ½"	12"-24"	7"	0.052"-0.079"	0.060"-0.105"	0.064"	0.060"							2-½"	2-½"			
UNIVERSAL	2⅔" × ½"	THROUGH 36"	12"	0.052"-0.138"	0.060"-0.135"	0.052"	0.060"					2" × 2" × 3/16"	2" × 2" × 3/16"	3-½"	3-½"	3-⅜"	3-⅜"	3-½"
		42"-60"	12"	0.052"-0.168"	0.075"-0.164"	0.052"	0.060"					2" × 2" × 3/16"	2" × 2" × 3/16"	3-½"	3-½"	3-⅜"	3-⅜"	5-½"
		THROUGH 72"	12"	0.052"-0.168"	0.164"	0.052"	0.105"	0.079"	½"	⅞"	32 ksi	2" × 2" × 3/16"	2" × 2" × 3/16"	3-½"	3-½"	3-⅜"	3-⅜"	5-½"
		78"-84"	16¼"	0.168"		0.079"		DOUBLE 0.079"	½"	⅞"	32 ksi							
ANNULAR	2⅔" × ½"	THROUGH 36"	7"	0.064"-0.138"	0.060"-0.135"	0.052"	0.060"	0.079"	½"	⅞"	32 ksi	2" × 2" × 3/16"	2" × 2" × 3/16"	2-½"	2-½"	3-⅜"	3-⅜"	3-½"
		42"-72"	12"	0.064"-0.168"	0.075"-0.164"	0.052"	0.105"	0.079"	½"	⅞"	32 ksi	2" × 2" × 3/16"	2" × 2" × 3/16"	3-½"	3-½"	3-⅜"	3-⅜"	5-½"
		78"-84"	12"	0.168"		0.079"		0.109"	½"	⅞"	45 ksi	2" × 2" × 3/16"		3-½"		3-⅜"		5-½"
	3" × 1"	48"-90"	14"	0.064"-0.109"		0.052"		0.079"	½"	⅞"	32 ksi	2" × 2" × 3/16"		3-½"		3-⅜"		5-½"
		96"-120"	14"	0.079"-0.109"		0.052"		0.109"	½"	⅞"	45 ksi	2" × 2" × 3/16"		3-½"		4-⅜"		
		42"-108"	14"		0.060"-0.135"		0.060"						2" × 2" × 3/16"		3-½"		3-⅜"	
HELICAL	2⅔" × ½"	THROUGH 36"	12"	0.052"-0.138"	0.060"-0.135"	0.052"	0.060"	0.079"	½"	⅞"	32 ksi	2" × 2" × 3/16"	2" × 2" × 3/16"	3-½"	3-½"	3-⅜"	3-⅜"	3-½"
		42"-72"	12"	0.052"-0.168"	0.075"-0.164"	0.052"	0.060"	0.079"	½"	⅞"	32 ksi	2" × 2" × 3/16"	2" × 2" × 3/16"	3-½"	3-½"	3-⅜"	3-⅜"	5-½"
		78"-84"	12"	0.168"		0.079"		0.109"	½"	⅞"	45 ksi	2" × 2" × 3/16"		3-½"		3-⅜"		5-½"
	3" × 1"	48"-90"	14"	0.064"-0.109"		0.052"		0.079"	½"	⅞"	32 ksi	2" × 2" × 3/16"		3-½"		3-⅜"		5-½"
		96"-120"	14"	0.079"-0.109"		0.052"		0.109"	½"	⅞"	45 ksi	2" × 2" × 3/16"		3-½"		4-⅜"		
		42"-108"	14"		0.060"-0.135"		0.060"						2" × 2" × 3/16"		3-½"		3-⅜"	
HUGGER	2⅔" × ½" REROLLED END	12"-54"	4"	0.052"-0.109"		0.052"						2½" × 1½" × 3/16"	2½" × 1½" × 3/16"	1-½"				3-½"
		60"-66"	4"	0.109"		0.064"						2½" × 1½" × 3/16"	2½" × 1½" × 3/16"	1-½"				3-½"
		36"-48"	4"	0.138"		0.064"						2½" × 1½" × 3/16"	2½" × 1½" × 3/16"	1-½"				3-½"
		THROUGH 72"	10½"	0.052"-0.168"		0.052"		0.079"	½"	⅞"	32 ksi							
		78"-84"	10½"	0.168"		0.079"		0.109"	½"	⅞"	45 ksi							
	3" × 1" REROLLED END	48"-90"	10½"	0.064"-0.109"		0.052"		0.079"	½"	⅞"	32 ksi							
		96"-120"	10½"	0.079"-0.109"		0.052"		0.109"	½"	⅞"	45 ksi							
	5" × 1" REROLLED END	48"-66"	7½"	0.064"-0.109"		0.064"		0.079"	½"	⅞"	32 ksi	2½" × 1½" × 3/16"	2½" × 1½" × 3/16"	1-½"				3-½"
		72"-90"	7½"	0.064"-0.079"		0.064"		0.079"	½"	⅞"	32 ksi	2½" × 1½" × 3/16"	2½" × 1½" × 3/16"	1-½"				3-½"
		48"-90"	7½"	0.064"-0.138"		0.064"		0.079"	½"	⅞"	32 ksi							
		48"-120"	12" SEE	0.064"-0.109"		0.064"		0.079"	½"	⅞"	32 ksi							
		48"-84"	12" NOTE	0.138"		0.064"		0.079"	½"	⅞"	32 ksi							
		90"-120"	12" 11	0.138"		0.064"		DOUBLE 0.079"	½"	⅞"	32 ksi							

SPIRAL RIB PROFILE

COUPLING TYPE	PIPE CORRUGATION	PIPE SIZE	W	PIPE WALL THICKNESS SSRP	PIPE WALL THICKNESS ASRP	BAND THICKNESS SSRP	BAND THICKNESS ASRP	BAR AND STRAP (SSRP ONLY) STRAP THICKNESS	BOLTS Dia	BAR Dia	BAR YIELD STRENGTH	ANGLE DIMENSIONS SSRP	ANGLE DIMENSIONS ASRP	BOLTS (No.- Dia) SSRP	BOLTS (No.- Dia) ASRP	RIVETS ANGLE TO BAND SSRP	RIVETS ANGLE TO BAND ASRP	SPOT WELDS ANGLE TO BAND SSRP
ANNULAR	2⅔" × ½" * REROLLED END	24"-36"	12"	0.064"-0.109"	0.060"-0.105"	0.052"	0.060"	0.079"	½"	⅞"	32 ksi	2" × 2" × 3/16"	2" × 2" × 3/16"	3-½"	3-½"	3-⅜"	3-⅜"	5-½"
		42"-60"	12"	0.064"-0.109"	0.075"-0.105"	0.052"	0.105"	0.079"	½"	⅞"	32 ksi	2" × 2" × 3/16"	2" × 2" × 3/16"	3-½"	3-½"	3-⅜"	3-⅜"	5-½"
		66"-72"	12"	0.064"-0.109"		0.052"		0.079"	½"	⅞"	32 ksi	2" × 2" × 3/16"	2" × 2" × 3/16"	3-½"	3-½"	3-⅜"	3-⅜"	5-½"
		78"-114"	12"	0.079"-0.109"		0.079"		0.109"	½"	⅞"	45 ksi	2" × 2" × 3/16"	2" × 2" × 3/16"	3-½"	3-½"	3-⅜"	3-⅜"	5-½"
HUGGER	2⅔" × ½" * REROLLED END	24"-72"	10½"	0.064"-0.109"		0.052"		0.079"	½"	⅞"	32 ksi							
		78"-84"	10½"	0.109"		0.079"		0.109"	½"	⅞"	45 ksi							

* See Note 14.

14. All profiles of Spiral Rib Pipe (¾" × ¾" ribs at 7½" pitch and ¾" × 1" ribs at 11½" pitch in both steel and aluminum and ¾" × 1" ribs at 8½" pitch in steel only) shall be manufactured with rerolled ends. Corrugation profile of the rerolled ends shall be 2⅔" × ½" annual corrugations with a minimum of two full corrugations at each end.

NOTES:

To accompany plans dated 1-24-11

1. All ferrous metal coupling band connection hardware shall be galvanized or electro-plated in accordance with the Standard Specifications.
2. For helically corrugated coupling bands, the connection angles may be oriented parallel to the pipe axis, provided connecting holes are slotted lengthwise sufficiently to allow adjustment for the helix angle.
3. Tension strap may be connected to band with either spot welds or fillet welds that develop minimum required strength of strap.
4. Use 1¼" gage line dimension on attached angle leg for rivets and spot welds.
5. Band thickness shall not be less than:
   a. 3 standard thicknesses lighter than the thickness of the pipe for Corrugated Steel Pipe.
   b. 2 standard thicknesses lighter than the thickness of the pipe and in no case lighter than 0.060" for Corrugated Aluminum Pipe.
6. Dimensions, thicknesses and strengths shown are minimum.
7. For pipe arches use same width band as for round pipe of equal periphery.
8. Fillet welds of equivalent strenght may be substituted for spot welds or rivets.
9. Spot welds shall develop minimum required strength of strap.
10. Pipe with rerolled ends having at least two 2⅔" × ½" annular corrugations at each end with or without an upturned flange may be connected with any of the annular coupling bands shown for pipe of the same diameter and wall thickness and having 2⅔" × ½" corrugations.
11. In the case of H-12 huggerbands, two piece bands are required for diameters through 96" and three piece bands are required for diameters 102" through 120".
12. Two piece bands are required for pipes greater than 42" diameter.
13. The 2¼" × 2" × 0.109" thick galvanized die-formed angle connector may be used in lieu of the 2" × 2" × 3/16" angle connector for standard joints only on pipes through 72" diameter.

STATE OF CALIFORNIA
DEPARTMENT OF TRANSPORTATION

CORRUGATED METAL PIPE COUPLING DETAILS No. 5 STANDARD JOINT

NO SCALE

RSP D97E DATED JUNE 6, 2008 SUPERSEDES STANDARD PLAN D97E
DATED MAY 1, 2006 - PAGE 187 OF THE STANDARD PLANS BOOK DATED MAY 2006.

REVISED STANDARD PLAN RSP D97E

2006 REVISED STANDARD PLAN RSP D97E

4-2-08

DIST	COUNTY	ROUTE	POST MILES TOTAL PROJECT	SHEET NO.	TOTAL SHEETS
04	SCI	152	19.3/20.3	34	39

Raymond Don Tsztoo
REGISTERED CIVIL ENGINEER

June 6, 2008
PLANS APPROVAL DATE

REGISTERED PROFESSIONAL ENGINEER Raymond Don Tsztoo No. C37332 Exp. 6-30-08 CIVIL STATE OF CALIFORNIA

The State of California or its officers or agents shall not be responsible for the accuracy or completeness of electronic copies of this plan sheet.

To accompany plans dated 1-24-11

ANNULAR AND HELICAL PROFILE

COUPLING TYPE	PIPE CORRUGATION	PIPE SIZE	W OR A	PIPE WALL THICKNESS CSP	PIPE WALL THICKNESS CAP	BAND THICKNESS CSP	BAND THICKNESS CAP	BAR AND STRAP (CSP ONLY) STRAP THICKNESS	BOLTS Dia	BAR Dia	BAR YIELD STRENGTH	ANGLE DIMENSIONS CSP	ANGLE DIMENSIONS CAP	BOLTS (No. - Dia) CSP	BOLTS (No. - Dia) CAP	RIVETS ANGLE TO BAND CSP	RIVETS ANGLE TO BAND CAP	SPOT WELDS ANGLE TO BAND CSP
TWO PIECE INTEGRAL FLANGE	1½" × ¼"	6"-10"	7"	0.064"-0.079"	0.060"	0.064"	0.060"							2-⅜"	2-⅜"			
	2⅔" × ½"	12"-24"	12"		0.060"-0.105"		0.060"								3-½"			
UNIVERSAL	2⅔" × ½"	THROUGH 36"	12"	0.064"-0.138"	0.060"-0.135"	0.064"	0.060"	0.079"	½"	⅞"	32 ksi	2" × 2" × 3/16"	2" × 2" × 3/16"	3-½"	3-½"	3-⅜"	3-⅜"	5-½"
		42"-60"	16¼"	0.064"-0.168"	0.060"-0.164"	0.064"	0.060"	DOUBLE 0.079"	½"	⅞"	32 ksi	2" × 2" × ¼"	2" × 2" × ¼"	4-½"	4-½"	5-⅜"	5-⅜"	
ANNULAR	2⅔" × ½"	THROUGH 36"	12"	0.064"-0.138"	0.060"-0.135"	0.064"	0.060"					2" × 2" × 3/16"	2" × 2" × 3/16"	3-½"	3-½"	3-⅜"	3-⅜"	5-½"
		42"-60"	12"	0.064"-0.079"		0.064"						2" × 2" × 3/16"		3-½"		3-⅜"		5-½"
		42"-60"	12"	0.109"-0.168"	0.135"-0.164"	0.064"	0.075"					2" × 2" × ¼"	2" × 2" × ¼"	3-½"	3-½"	5-⅜"	5-⅜"	
		66"-72"	24"		0.164"		0.105"						2" × 2" × ¼"		5-½"		5-½"	
		66"-84"	24"	0.109"-0.168"		0.064"						2" × 2" × ¼"		5-½"		7-⅜"		
		42"-54"	12"		0.060"-0.105"		0.060"						2" × 2" × 3/16"		3-½"		3-⅜"	
	3" × 1"	48"-60"	14"	0.064"-0.079"		0.064"						2" × 2" × 3/16"		3-½"		3-⅜"		5-½"
		48"-60"	14"	0.109"		0.064"						2" × 2" × 3/16"		3-½"		5-⅜"		
		66"-120"	25"	0.064"-0.109"		0.064"						2" × 2" × 3/16"		5-½"		9-⅜"		
		42"-60"	14"		0.060"-0.105"		0.060"						2" × 2" × 3/16"		3-½"		5-⅜"	
		42"-60"	14"		0.135"		0.075"						2" × 2" × ¼"		3-½"		5-⅜"	
		66"-96"	25"		0.060"-0.135"		0.060"						2" × 2" × ¼"		5-½"		7-⅜"	
		96"-108"	25"		0.135"		0.075"						2" × 2" × ¼"		5-½"		7-⅜"	
HELICAL	2⅔" × ½"	THROUGH 36"	12"	0.064"-0.138"	0.060"-0.135"	0.064"	0.060"					2" × 2" × 3/16"	2" × 2" × 3/16"	3-½"	3-½"	3-⅜"	3-⅜"	5-½"
		42"-54"	12"		0.060"-0.105"		0.060"						2" × 2" × 3/16"		3-½"		3-⅜"	
		42"-60"	12"	0.064"-0.079"		0.064"						2" × 2" × 3/16"		3-½"		3-⅜"		5-½"
		42"-60"	12"	0.109"-0.168"	0.135"-0.164"	0.064"	0.075"					2" × 2" × ¼"	2" × 2" × ¼"	3-½"	3-½"	5-⅜"	5-⅜"	
		66'-84"	24"	0.109"-0.168"		0.064"						2" × 2" × ¼"		5-½"		7-⅜"		
		66"-72"	24"		0.164"		0.105"						2" × 2" × ¼"		5-½"		5-⅜"	
	3" × 1"	48"-60"	14"	0.064"-0.079"		0.064"						2" × 2" × 3/16"		3-½"		3-⅜"		5-½"
		48"-60"	14"	0.109"		0.064"						2" × 2" × 3/16"		3-½"		5-⅜"		
		66"-120"	25"	0.064"-0.109"		0.064"						2" × 2" × 3/16"		5-½"		9-⅜"		
		42"-60"	14"		0.060"-0.105"		0.060"						2" × 2" × 3/16"		3-½"		5-⅜"	
		42"-60"	14"		0.135"		0.075"						2" × 2" × ¼"		3-½"		5-⅜"	
		66"-96"	25"		0.060"-0.135"		0.060"						2" × 2" × ¼"		5-½"		7-⅜"	
		96"-108"	25"		0.135"		0.075"						2" × 2" × ¼"		5-½"		7-⅜"	
HUGGER	2⅔" × ½" REROLLED END	THROUGH 48"	10½"	0.109"		0.064"		0.079"	½"	⅞"	32 ksi							
		54"- 66"	10½"	0.109"		0.064"		DOUBLE 0.079"	½"	⅞"	32 ksi							
		THROUGH 54"	10½"	0.064"-0.079"		0.064"		0.079"	½"	⅞"	32 ksi							
		THROUGH 60"	10½"	0.138"		0.079"		DOUBLE 0.079"	½"	⅞"	32 ksi							
		66"-72"	10½"	0.138"		0.109"		DOUBLE 0.079"	½"	⅞"	32 ksi							
		THROUGH 72"	10½"	0.168"		0.109"		DOUBLE 0.109"	½"	⅞"	45 ksi							
	3" × 1" REROLLED END	48"-84"	10½"	0.109"		0.079"		DOUBLE 0.079"	½"	⅞"	32 ksi							
		48"-90"	10½"	0.064"-0.079"		0.064"		DOUBLE 0.079"	½"	⅞"	32 ksi							
		96"-102"	10½"	0.079"		0.079"		DOUBLE 0.079"	½"	⅞"	32 ksi							
		90"-120"	10½"	0.109"		0.109"		DOUBLE 0.109"	½"	⅞"	45 ksi							

SPIRAL RIB PROFILE

COUPLING TYPE	PIPE CORRUGATION	PIPE SIZE	W	PIPE WALL THICKNESS SSRP	PIPE WALL THICKNESS ASRP	BAND THICKNESS SSRP	BAND THICKNESS ASRP	BAR AND STRAP (SSRP ONLY) STRAP THICKNESS	BOLTS Dia	BAR Dia	BAR YIELD STRENGTH	ANGLE DIMENSIONS SSRP	ANGLE DIMENSIONS ASRP	BOLTS (No.- Dia) SSRP	BOLTS (No.- Dia) ASRP	RIVETS ANGLE TO BAND SSRP	RIVETS ANGLE TO BAND ASRP	SPOT WELDS ANGLE TO BAND SSRP
ANNULAR	2⅔" × ½" * REROLLED END	24"-36"	12"	0.064"-0.109"	0.060"-0.105"	0.064"	0.060"	0.079"	½"	⅞"	32 ksi	2" × 2" × 3/16"	2" × 2" × 3/16"	3-½"	3-½"	3-⅜"	3-⅜"	5-½"
		42"-60"	12"	0.064"-0.079"	0.075"-0.105"	0.064"	0.075"	0.079"	½"	⅞"	32 ksi	2" × 2" × 3/16"	2" × 2" × 3/16"	3-½"	3-½"	3-⅜"	3-⅜"	5-½"
		42"-60"	12"	0.109"		0.064"		0.079"	½"	⅞"	32 ksi	2" × 2" × ¼"		3-½"		5-⅜"		
		66"-84"	24"	0.109"		0.064"		0.079"	½"	⅞"	32 ksi	2" × 2" × ¼"		5-½"		7-⅜"		
HUGGER	2⅔" × ½" * REROLLED END	24"-54"	10½"	0.064"-0.079"		0.064"		0.079"	½"	⅞"	32 ksi							
		24"-48"	10½"	0.109"		0.064"		0.079"	½"	⅞"	32 ksi							
		54"-66"	10½"	0.109"		0.064"		Double 0.079"	½"	⅞"	32 ksi							

* See Note 13.

NOTES:

1. All ferrous metal coupling band connection hardware shall be galvanized or electro-plated in accordance with the Standard Specifications.
2. For helically corrugated coupling bands, the connection angles may be oriented parallel to the pipe axis, provided connecting holes are slotted lengthwise sufficiently to allow adjustment for the helix angle.
3. Tension strap may be connected to band with either spot welds or fillet welds that develop minimum required strength of strap.
4. Use 1¼" gage line dimension on attached angle leg for rivets and spot welds.
5. Band thickness shall not be less than:
   a. 3 standard thicknesses lighter than the thickness of the pipe for Corrugated Steel Pipe.
   b. 2 standard thicknesses lighter than the thickness of the pipe and in no case lighter than 0.060" for Corrugated Aluminum Pipe.
6. Dimensions, thicknesses and strengths shown are minimum.
7. For pipe arches use same width band as for round pipe of equal periphery.
8. Fillet welds of equivalent strength may be substituted for spot welds or rivets.
9. Spot welds shall develop minimum required strength of strap.
10. Pipe with rerolled ends having at least two 2⅔" × ½" annular corrugations at each end with or without an upturned flange may be connected with any of the annular coupling bands shown for pipe of the same diameter and wall thickness and having 2⅔" × ½" corrugations.
11. In the case of H-12 huggerbands, two piece bands are required for diameters through 96" and three piece bands are required for diameters 102" through 120".
12. Two piece bands are required for pipes greater than 42" diameter.
13. All profiles of Spiral Rib Pipe (¾" × ¾" ribs at 7½" pitch and ¾" × 1" ribs at 11½" pitch in both steel and aluminum and ¾" × 1" ribs at 8½" pitch in steel only) shall be manufactured with rerolled ends. Corrugation profile of the rerolled ends shall be 2⅔" × ½" annual corrugations with a minimum of two full corrugations at each end.

STATE OF CALIFORNIA
DEPARTMENT OF TRANSPORTATION

CORRUGATED METAL PIPE COUPLING DETAILS No. 6 POSITIVE JOINT

NO SCALE

RSP D97F DATED JUNE 6, 2008 SUPERSEDES STANDARD PLAN D97F
DATED MAY 1, 2006 - PAGE 188 OF THE STANDARD PLANS BOOK DATED MAY 2006.

REVISED STANDARD PLAN RSP D97F

2006 REVISED STANDARD PLAN RSP D97F

4-2-08

DIST	COUNTY	ROUTE	POST MILES TOTAL PROJECT	SHEET NO.	TOTAL SHEETS
04	SCI	152	19.3/20.3	35	39

LICENSED LANDSCAPE ARCHITECT

April 3, 2009
PLANS APPROVAL DATE

The State of California or its officers or agents shall not be responsible for the accuracy or completeness of electronic copies of this plan sheet.

LICENSED LANDSCAPE ARCHITECT — Gregory A. Balzer — 02-28-11 Renewal Date — 03-04-09 Date — STATE OF CALIFORNIA

To accompany plans dated 1-24-11

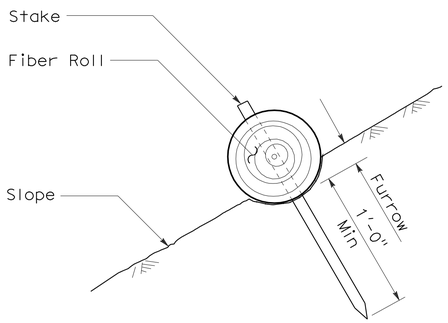

SECTION

FIBER ROLL (TYPE 1)

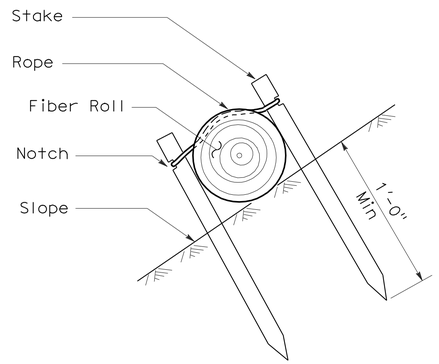

SECTION

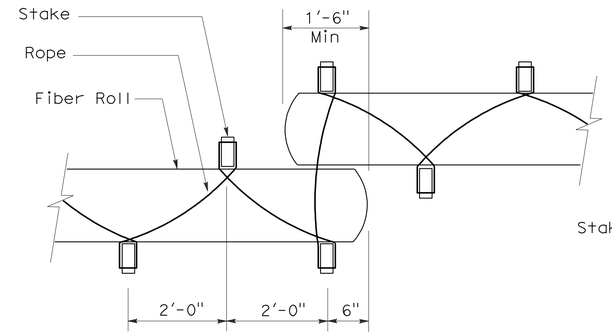

PLAN

FIBER ROLL (TYPE 2)

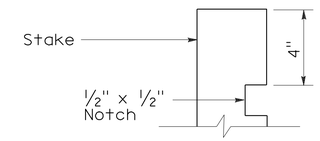

ELEVATION

STAKE NOTCH DETAIL

NOTES:

1. Fiber roll spacing varies depending upon slope inclination.
2. Installations shown in the perspectives are for slope inclination of 10:1 and steeper.

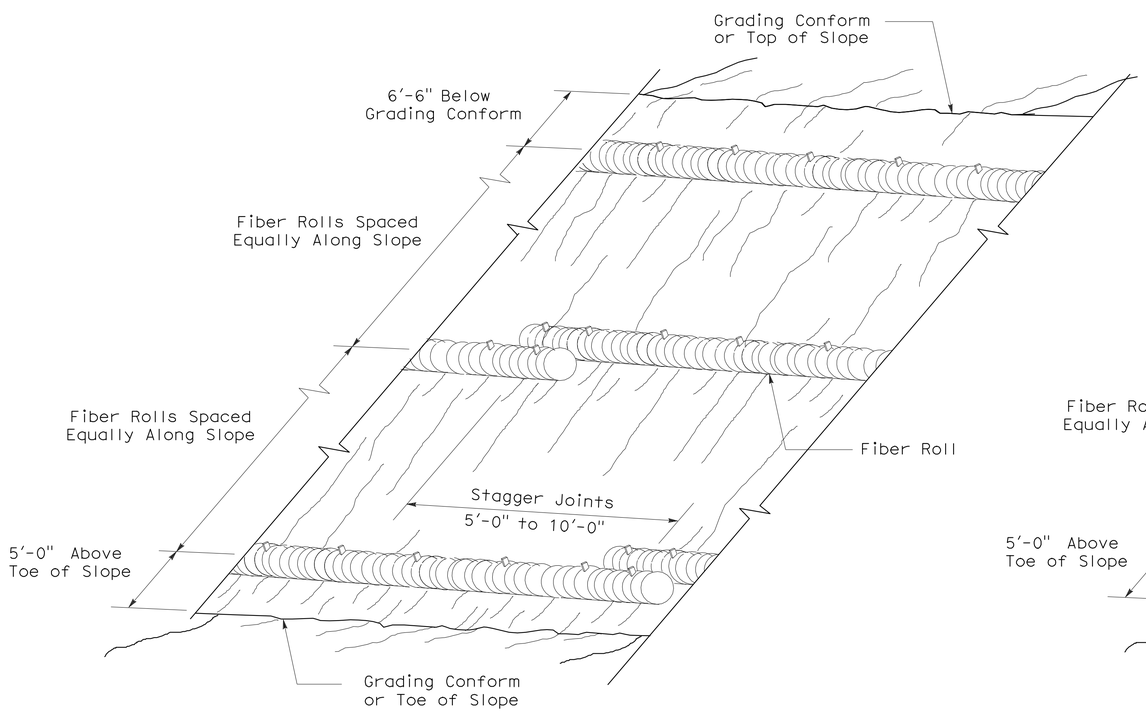

PERSPECTIVE

FIBER ROLL (TYPE 1)

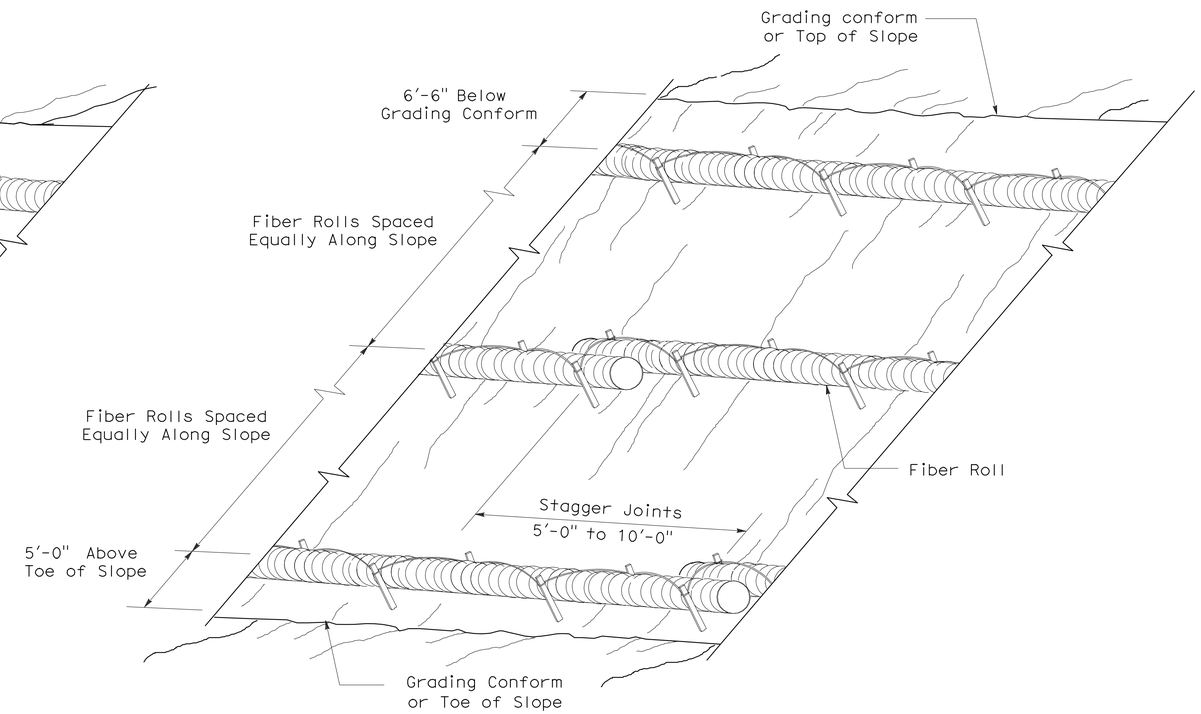

PERSPECTIVE

FIBER ROLL (TYPE 2)

STATE OF CALIFORNIA
DEPARTMENT OF TRANSPORTATION

EROSION CONTROL DETAILS (FIBER ROLL)

NO SCALE

RNSP H51 DATED APRIL 3, 2009 SUPERSEDES NSP H51 DATED DECEMBER 1, 2006 THAT SUPPLEMENTS THE STANDARD PLANS BOOK DATED MAY 2006.

REVISED NEW STANDARD PLAN RNSP H51

2006 REVISED NEW STANDARD PLAN RNSP H51

3-4-09

DIST	COUNTY	ROUTE	POST MILES TOTAL PROJECT	SHEET NO.	TOTAL SHEETS
04	SCI	152	19.3/20.3	36	39

Randell D. Hiatt
REGISTERED CIVIL ENGINEER

June 6, 2008
PLANS APPROVAL DATE

REGISTERED PROFESSIONAL ENGINEER
Randell D. Hiatt
No. C50200
Exp. 6-30-09
CIVIL
STATE OF CALIFORNIA

The State of California or its officers or agents shall not be responsible for the accuracy or completeness of electronic copies of this plan sheet.

To accompany plans dated 1-24-11

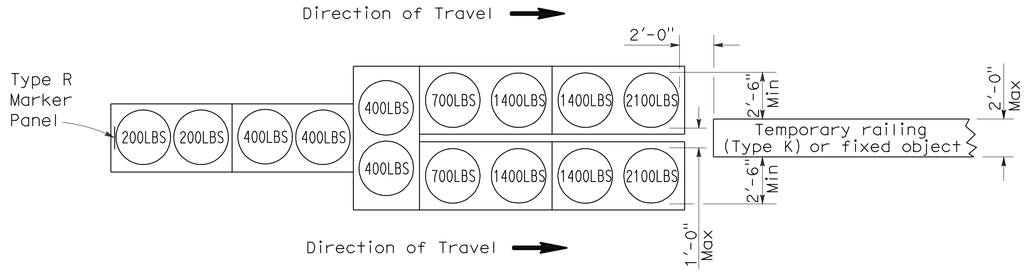

ARRAY 'TU14'

Approach speed 45 mph or more

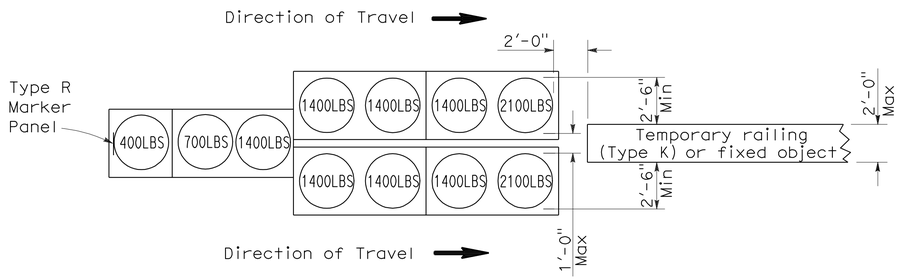

ARRAY 'TU11'

Approach speed less than 45 mph

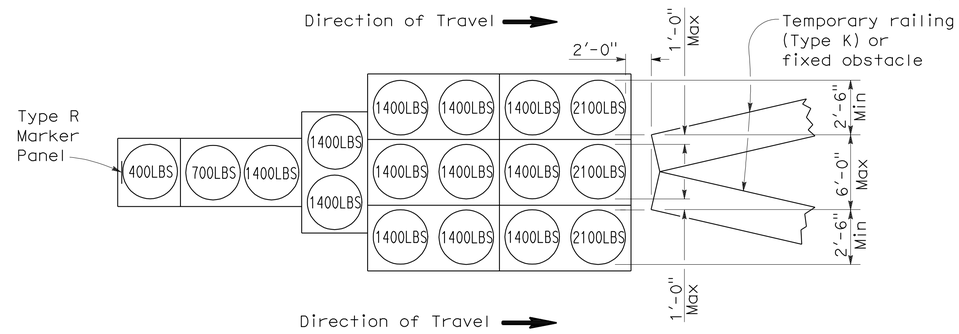

ARRAY 'TU17'

Approach speed less than 45 mph

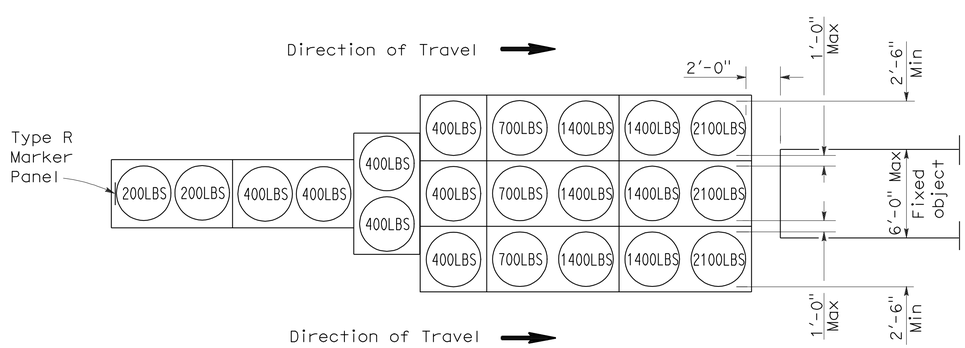

ARRAY 'TU21'

Approach speed 45 mph or more

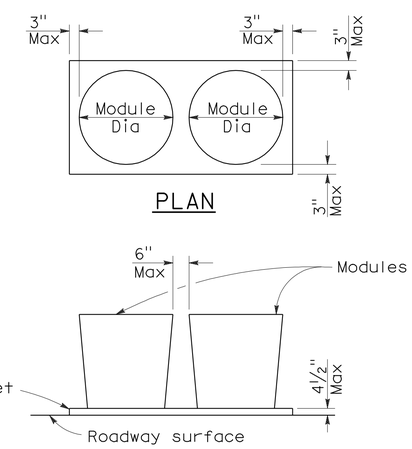

PLAN

ELEVATION

CRASH CUSHION PALLET DETAIL

See Note 7

NOTES:

1. (XXX) Indicates sand filled module location and weight of sand in pounds for each module. Module spacing is based on the greater diameter of the module.
2. All sand weights are nominal.
3. Temporary crash cushion arrays shall not encroach on the traveled way.
4. Place the top of Type R marker panel 1" below the module lid.
5. Refer to Standard Plan A73B for marker details.
6. Approach speeds indicated conform to NCHRP 350 Report criteria.
7. Use of pallets is optional.

STATE OF CALIFORNIA
DEPARTMENT OF TRANSPORTATION

TEMPORARY CRASH CUSHION, SAND FILLED (UNIDIRECTIONAL)

NO SCALE

RSP T1A DATED JUNE 6, 2008 SUPERSEDES STANDARD PLAN T1A
DATED MAY 1, 2006 - PAGE 211 OF THE STANDARD PLANS BOOK DATED MAY 2006.

REVISED STANDARD PLAN RSP T1A

2006 REVISED STANDARD PLAN RSP T1A

DIST	COUNTY	ROUTE	POST MILES TOTAL PROJECT	SHEET NO.	TOTAL SHEETS
04	SCI	152	19.3/20.3	37	39

Randell D. Hiatt
REGISTERED CIVIL ENGINEER

June 6, 2008
PLANS APPROVAL DATE

REGISTERED PROFESSIONAL ENGINEER
Randell D. Hiatt
No. C50200
Exp. 6-30-09
CIVIL
STATE OF CALIFORNIA

The State of California or its officers or agents shall not be responsible for the accuracy or completeness of electronic copies of this plan sheet.

To accompany plans dated 1-24-11

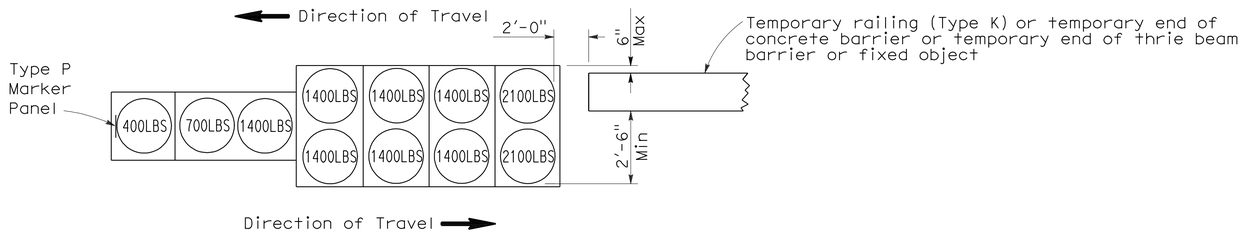

ARRAY 'TB11'

Approach speed less than 45 mph

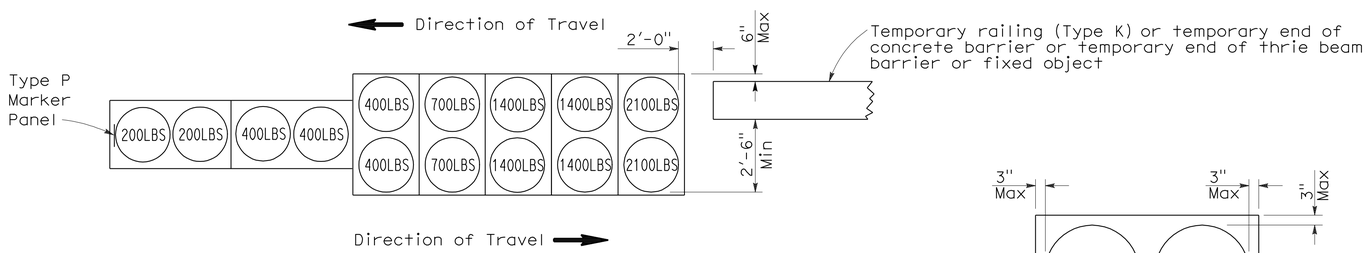

ARRAY 'TB14'

Approach speed 45 mph or more

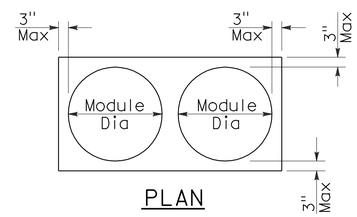

PLAN

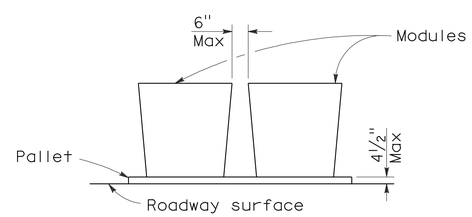

ELEVATION

CRASH CUSHION PALLET DETAIL

See Note 7

NOTES:

1. (XXX) Indicates sand filled module location and weight of sand in pounds for each module. Module spacing is based on the greater diameter of the module.
2. All sand weights are nominal.
3. Temporary crash cushion arrays shall not encroach on the traveled way.
4. Place the Type P marker panel so that the bottom of the panel rests upon the pallet.
5. Refer to Standard Plan A73B for marker details.
6. Approach speeds indicated conform to NCHRP 350 Report criteria.
7. Use of pallets is optional.

STATE OF CALIFORNIA
DEPARTMENT OF TRANSPORTATION

TEMPORARY CRASH CUSHION, SAND FILLED (BIDIRECTIONAL)

NO SCALE

RSP T1B DATED JUNE 6, 2008 SUPERSEDES STANDARD PLAN T1B
DATED MAY 1, 2006 - PAGE 212 OF THE STANDARD PLANS BOOK DATED MAY 2006.

REVISED STANDARD PLAN RSP T1B

2006 REVISED STANDARD PLAN RSP T1B

5-15-08

DIST	COUNTY	ROUTE	POST MILES TOTAL PROJECT	SHEET NO.	TOTAL SHEETS
04	SCI	152	19.3/20.3	38	39

Randell D. Hiatt
REGISTERED CIVIL ENGINEER

June 6, 2008
PLANS APPROVAL DATE

REGISTERED PROFESSIONAL ENGINEER
Randell D. Hiatt
No. C50200
Exp. 6-30-09
CIVIL
STATE OF CALIFORNIA

The State of California or its officers or agents shall not be responsible for the accuracy or completeness of electronic copies of this plan sheet.

To accompany plans dated 1-24-11

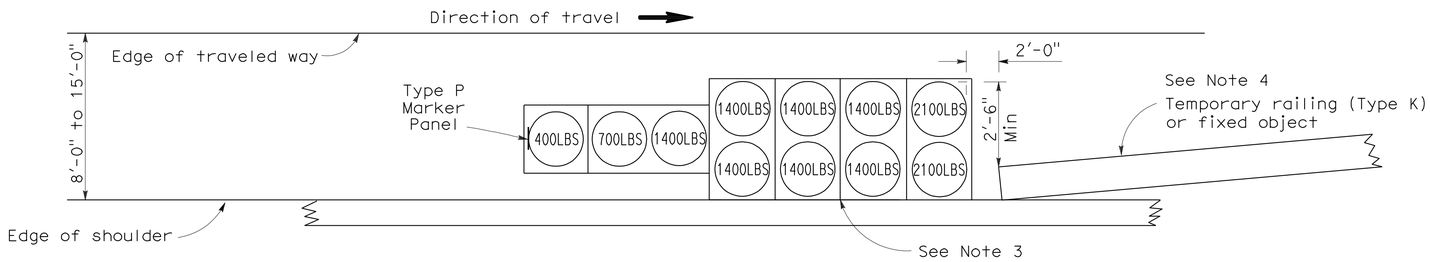

ARRAY 'TS11'

Approach speed less than 45 mph
See Note 9

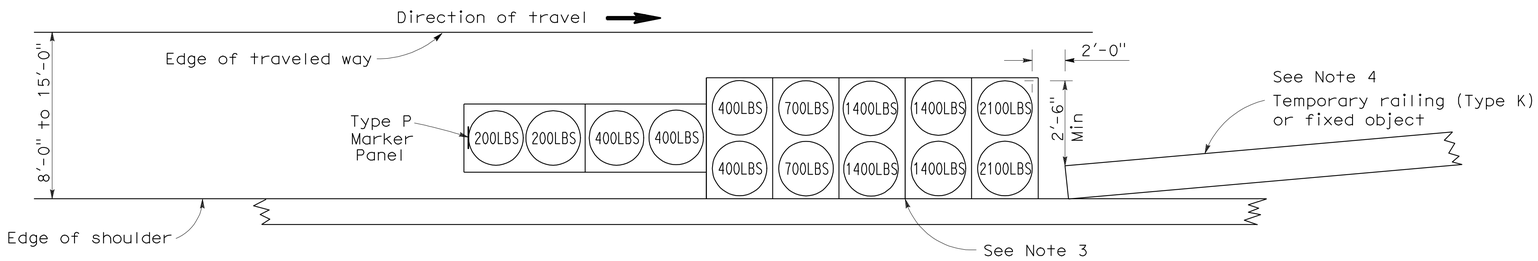

ARRAY 'TS14'

Approach speed 45 mph or more
See Note 9

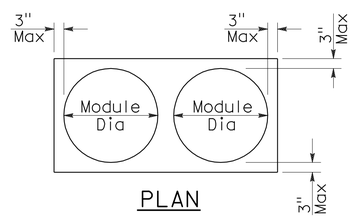

PLAN

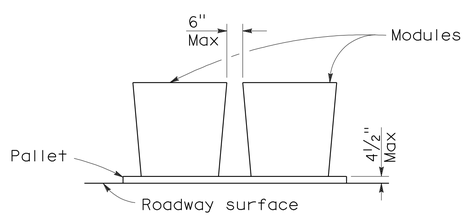

ELEVATION

CRASH CUSHION PALLET DETAIL

See Note 11

NOTES:

1. (XXX) Indicates sand filled module location and weight of sand in pounds for each module. Module spacing is based on the greater diameter of the module.
2. All sand weights are nominal.
3. The temporary crash cushion arrays shown on this plan shall be used only in locations where there will be traffic on one side of the temporary crash cushion array.
4. If the fixed object or approach end of the temporary railing is less than 15'-0" from the edge of traveled way, a temporary crash cushion is required in a construction or work zone.
5. Temporary crash cushion arrays shall not encroach on the traveled way.
6. Arrays for median shoulders shall conform to details shown on this plan for outside shoulders.
7. Place the Type P marker panel so that the bottom of the panel rests upon the pallet and faces traffic.
8. Refer to Standard Plan A73B for marker details.
9. For shoulder widths less than 8'-0", appropriate approved crash cushion protection, other than sand filled modules, shall be provided at fixed objects and at approach ends of temporary railing. The specific type of crash cushion shall be as shown on the project plans or as specified in the Special Provisions, or if not shown on the project plans or specified in the Special Provisions, shall be as approved by the Engineer.
10. Approach speeds indicated conform to NCHRP 350 Report criteria.
11. Use of pallets is optional.

STATE OF CALIFORNIA
DEPARTMENT OF TRANSPORTATION

TEMPORARY CRASH CUSHION, SAND FILLED (SHOULDER INSTALLATIONS)

NO SCALE

RSP T2 DATED JUNE 6, 2008 SUPERSEDES STANDARD PLAN T2
DATED MAY 1, 2006 - PAGE 213 OF THE STANDARD PLANS BOOK DATED MAY 2006.

REVISED STANDARD PLAN RSP T2

2006 REVISED STANDARD PLAN RSP T2

DIST	COUNTY	ROUTE	POST MILES TOTAL PROJECT	SHEET NO.	TOTAL SHEETS
04	SCI	152	19.3/20.3	39	39

LICENSED LANDSCAPE ARCHITECT

April 3, 2009
PLANS APPROVAL DATE

The State of California or its officers or agents shall not be responsible for the accuracy or completeness of electronic copies of this plan sheet.

LICENSED LANDSCAPE ARCHITECT — Robert B. Schott — 3025 — Signature — 11-30-10 Renewal Date — 2-25-09 Date — STATE OF CALIFORNIA

To accompany plans dated 1-24-11

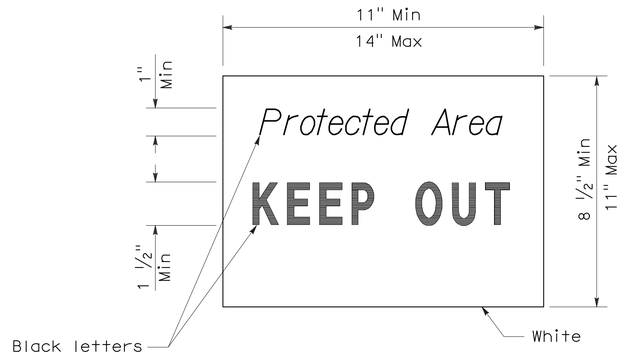

SIGN DETAIL

NOTE:

1. Temporary silt fence and temporary straw bale barrier shown for reference purposes only.

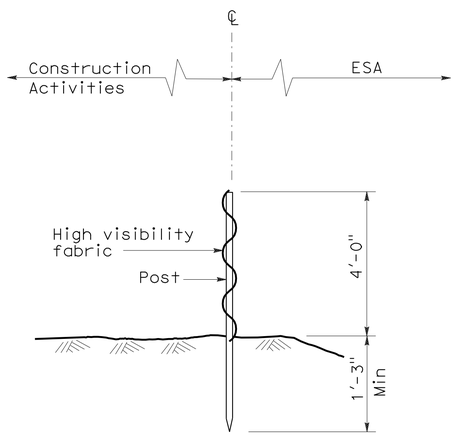

SECTION
TEMPORARY FENCE (TYPE ESA)

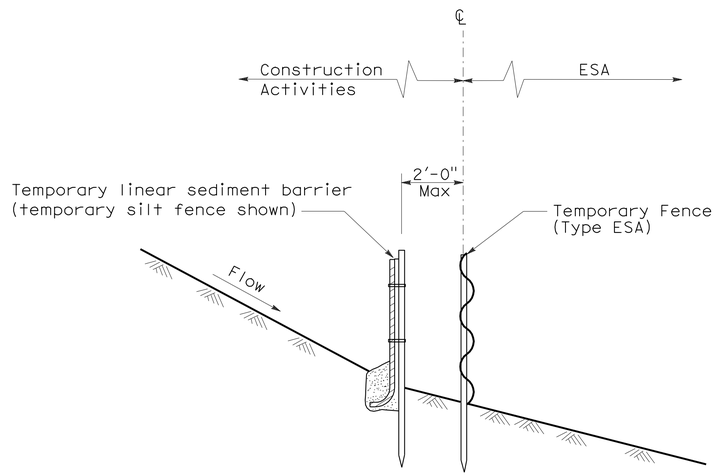

SECTION
PLACEMENT DETAIL
FOR TEMPORARY LINEAR SEDIMENT BARRIER
USED WITH TEMPORARY
FENCE (TYPE ESA)
(See Note 1)

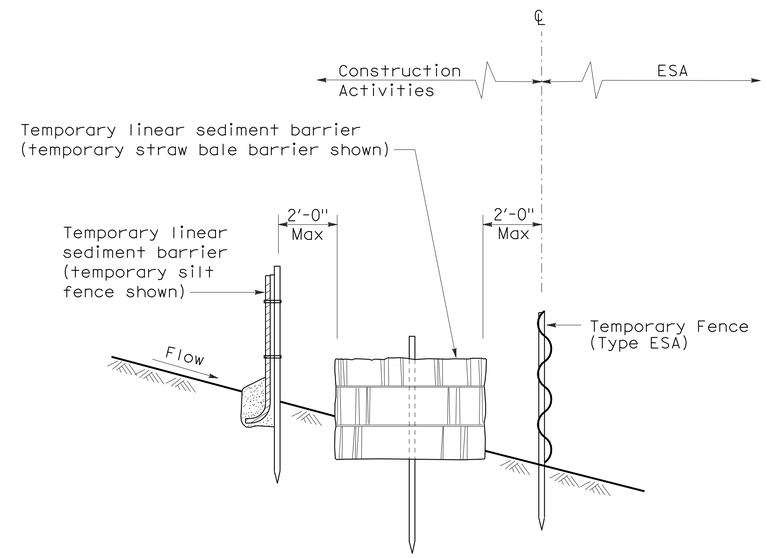

SECTION
PLACEMENT DETAIL
FOR TEMPORARY SILT FENCE
AND TEMPORARY STRAW BALE BARRIER
USED WITH TEMPORARY FENCE (TYPE ESA)
(See Note 1)

STATE OF CALIFORNIA
DEPARTMENT OF TRANSPORTATION

TEMPORARY WATER POLLUTION CONTROL DETAILS [TEMPORARY FENCE (TYPE ESA)]

NO SCALE

NSP T65 DATED APRIL 3, 2009 SUPPLEMENTS
THE STANDARD PLANS BOOK DATED MAY 2006.

NEW STANDARD PLAN NSP T65

2006 NEW STANDARD PLAN NSP T65

1-7-09