Dist	COUNTY	ROUTE	POST MILES TOTAL PROJECT	SHEET No.	TOTAL SHEETS
04	Ala	24, 80, 84 92, 880, *etc.*	Var	1	126

STATE OF CALIFORNIA
DEPARTMENT OF TRANSPORTATION

ACHSNHPG-X001(595)E

3

PROJECT PLANS FOR CONSTRUCTION ON
STATE HIGHWAY

IN ALAMEDA COUNTY
AT VARIOUS LOCATIONS

TO BE SUPPLEMENTED BY STANDARD PLANS DATED 2010

INDEX OF PLANS

SHEET No.	DESCRIPTION
1	TITLE SHEET AND LOCATION MAP
2	LOCATIONS OF CONSTRUCTION
3 - 33	CONSTRUCTION DETAILS
34 - 37	TEMPORARY WATER POLLUTION CONTROL QUANTITIES
38 - 54	CONSTRUCTION AREA SIGNS
55	TRAFFIC HANDLING PLAN
56 - 59	SUMMARY OF QUANTITIES
60 - 61	IRRIGATION QUANTITIES
62 - 66	EROSION CONTROL LEGEND, DETAILS AND QUANTITIES
67 - 73	ELECTRICAL PLAN
3 74 - 101E	REVISED STANDARD PLANS
	STRUCTURE PLANS
102 - 103	GENERAL PLAN
104	DEMOLITION PLAN
105 - 126	CONCRETE BARRIER TRANSITIONS

THE STANDARD PLANS LIST APPLICABLE TO THIS CONTRACT IS INCLUDED IN THE NOTICE TO BIDDERS AND SPECIAL PROVISIONS BOOK.

LOCATION MAP

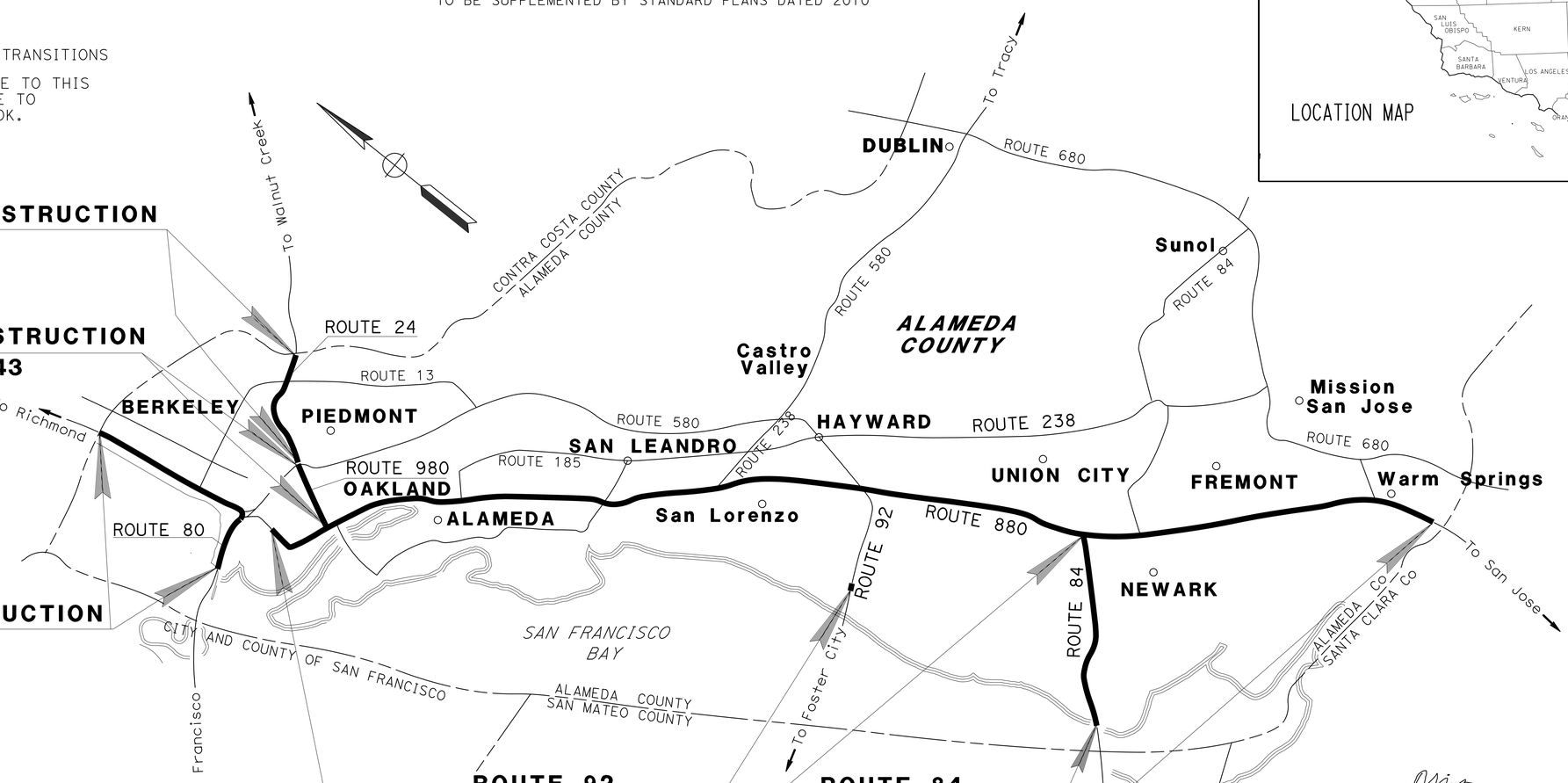

NO SCALE

NOTE:
THE TABLE OF LOCATIONS OF CONSTRUCTION IS SHOWN ON THE LOCATIONS OF CONSTRUCTION SHEET.

THE CONTRACTOR SHALL POSSESS THE CLASS (OR CLASSES) OF LICENSE AS SPECIFIED IN THE "NOTICE TO BIDDERS."

3 **REPLACED PER ADDENDUM No. 3 DATED SEPTEMBER 25, 2015**

PROJECT MANAGER: JACK SIAUW
DESIGN MANAGER: GEORGE LO

PROJECT ENGINEER REGISTERED CIVIL ENGINEER — DATE 4/20/15

April 27, 2015
PLANS APPROVAL DATE

REGISTERED PROFESSIONAL ENGINEER — Patrick Yip — No. 44277 — Exp. 6-30-17 — CIVIL — STATE OF CALIFORNIA

THE STATE OF CALIFORNIA OR ITS OFFICERS OR AGENTS SHALL NOT BE RESPONSIBLE FOR THE ACCURACY OR COMPLETENESS OF SCANNED COPIES OF THIS PLAN SHEET.

CONTRACT No.	04-2G5014
PROJECT ID	0414000005

LAST REVISION 04-08-15 — DATE PLOTTED => 24-SEP-2015 — TIME PLOTTED => 15:16

Dist	COUNTY	ROUTE	POST MILES TOTAL PROJECT	SHEET No.	TOTAL SHEETS
04	Ala	24,80,84 92,880,*etc.*	Var	56	126

REGISTERED CIVIL ENGINEER 4/20/15 DATE

4-27-15
PLANS APPROVAL DATE

REGISTERED PROFESSIONAL ENGINEER Thanh C. Nguyen No. 58137 Exp. 6-30-16 CIVIL STATE OF CALIFORNIA

THE STATE OF CALIFORNIA OR ITS OFFICERS OR AGENTS SHALL NOT BE RESPONSIBLE FOR THE ACCURACY OR COMPLETENESS OF SCANNED COPIES OF THIS PLAN SHEET.

3

ROADWAY QUANTITIES

PROJECT WORK LOCATION: LOCATION No.	COUNTY	ROUTE	SIDE	PM	DIRECTION	DESCRIPTION	MIDWEST GUARDRAIL SYSTEM REVISED STANDARD PLAN LAYOUT *	REMOVE MARKER (EA)	REMOVE AC DIKE (LF)	BURIED END POST ANCHOR (N) (LF)	REMOVE GUARDRAIL (LF)	MINOR HMA (TON)	PLACE HMA DIKE TYPE C (LF)	PLACE HMA DIKE TYPE F (LF)	OBJECT MARKER (TYPE L-1) (EA)	OBJECT MARKER (TYPE P) (EA)	GUARD RAILING DELINEATOR ** (EA)	MIDWEST GUARDRAIL SYSTEM (WOOD POST) (EA)	ALTERNATIVE FLARED TERMINAL SYSTEM (EA)	TRANSITION RAILING (TYPE WB-31) (EA)	TRANSITION RAILING (TYPE STB) (EA)	VEGETATION CONTROL (MINOR CONCRETE) (SQYD)	RUBBER WEED MAT VEGETATION CONTROL (SQYD)	RESET ROADSIDE SIGN (EA)	TERMINAL SYSTEM (TYPE CAT-350) (EA)	REMOVE CRASH CUSHION (SAND FILLED) (EA)	REMOVE FENCE (LF)	FENCE (TYPE WM, METAL POST) (LF)	TEMPORARY RAILING (TYPE K) (LF)	TEMPORARY ALTERNATIVE CRASH CUSHION (EA)	CHANNELIZER (SURFACE MOUNTED) (EA)	TREATED WOOD WASTE (LB)	NOTES
1	Ala	24	R+	R1.94	EB	NORTH CONNECTOR (E AND W 580-E24) UC Br No. 33-0302H	12B	3	31		60.1	0.35		31	1	1			1	1		68							100	1	10	721	SEE DETAIL ID, SHEET C-13 AND STRUCTURE SHEET 17
2	Ala	24	R+	R2.02	EB	MacARTHUR Blvd UC Br No. 33-0358R	12A	3	53		56.5	0.60		53		1	3	28		1		44							100	1	10	678	SEE DETAIL JA, SHEET C-16 AND STRUCTURE SHEET 4
3	Ala	24	R+	R2.20	EB	40TH St UC Br No. 33-0359S OFF-RAMP	12A	2			56.5					1	3	28		1		44							100	1	10	678	SEE DETAIL JC, SHEET C-17 AND STRUCTURE SHEET 4
4	Ala	24	L+	R2.09	EB	40TH St UC Br No. 33-0359S OFF-RAMP	15A	1			56.5					1	3	28		1		44							100	1	10	678	SEE DETAIL JC, SHEET C-17 AND STRUCTURE SHEET 4
5	Ala	24	L+	R2.10	WB	40TH St UC Br No. 33-0359K CONNECTOR	15A	2			100					1	15	151		1		176			1	1			100	1	10	1200	SEE DETAIL P, SHEET C-21 AND STRUCTURE SHEET 4
6	Ala	24	R+	R2.17	EB	40TH St UC Br No. 33-0359R	12B	6	62.5		77.1	0.41	62.5		1	1			1	1		67		1					100	1	10	925	SEE DETAIL IC, SHEET C-12 AND STRUCTURE SHEET 4
7	Ala	24	R+	R2.20	WB	ROUTE 24/580/980 INTERCHANGE OVER 40TH St UC Br No. 33-0305F	15A				100					1	15	151		1		198							100	1	10	1200	SEE DETAIL P, SHEET C-21 AND STRUCTURE SHEET 6
8	Ala	24	L+	R2.20	WB	ROUTE 24/580/980 INTERCHANGE OVER 40TH St UC Br No. 33-0305F	15A	2	31		50	0.35		31		1	15	151		1		174			1				100	1	10	600	SEE DETAIL R, SHEET C-22 AND STRUCTURE SHEET 4
9	Ala	24	R+	R2.20	WB	40TH St UC Br No. 33-0359L	15A	4	239		50	1.69	214	25		1	15	151		1		197		1					100	1	10	600	SEE DETAIL R, SHEET C-22 AND STRUCTURE SHEET 6
10	Ala	24	L+	R2.33	WB	42ND St UC Br No. 33-0363K CONNECTOR	15A	2			75					1	15	151		1		159			1	1			100	1	10	900	SEE DETAIL R, SHEET C-22 AND STRUCTURE SHEET 4
11	Ala	24	R+	R2.33	WB	42ND St UC Br No. 33-0363L CONNECTOR	15A	1	239		75	1.68	214	25		1	15	151		1		193							100	1	10	900	SEE DETAIL R, SHEET C-22 AND STRUCTURE SHEET 4
12	Ala	24	R+	R2.33	EB	42ND St UC Br No. 33-0363R CONNECTOR	15A	2			50					1	15	151		1		174			1	1			100	1	10	600	SEE DETAIL P, SHEET C-21 AND STRUCTURE SHEET 4
12A	Ala	24	L+	R2.33	EB	42ND St UC Br No. 33-0363S OFF-RAMP	15A	2			50					1	15	151		1		193							100	1	10	600	SEE DETAIL P, SHEET C-21 AND STRUCTURE SHEET 4
13	Ala	24	R+	R2.47	WB	45TH St UC Br No. 33-0364L	15A	3			53					1	3	28		1		44							100	1	10	636	SEE DETAIL T, SHEET C-24 AND STRUCTURE SHEET 4
14	Ala	24	R+	R2.47	EB	45TH St UC Br No. 33-0364R	15A	3	87.5		115	0.69	62.5	25		1	15	151		1		174			1	1			100	1	10	1380	SEE DETAIL R, SHEET C-22 AND STRUCTURE SHEET 4
14A	Ala	24	L+	R2.47	EB	45TH St UC Br No. 33-0364S OFF-RAMP	15A	3			115					1	15	151		1		192							100	1	10	1380	SEE DETAIL R, SHEET C-22 AND STRUCTURE SHEET 4
15	Ala	24	L+	R2.47	WB	45TH St UC Br No. 33-0364K CONNECTOR	15A	2			53					1	3	28		1		44							100	1	10	636	SEE DETAIL T, SHEET C-24 AND STRUCTURE SHEET 4
16	Ala	24	R+	R2.59	EB	MARTIN LUTHER KING JR WAY UC Br No. 33-0365R	12B	4			140				1	1	6	74	1	1		124							100	1	10	1680	SEE DETAIL HH, SHEET C-9 AND STRUCTURE SHEET 4
17	Ala	24	R+	R2.59	WB	MARTIN LUTHER KING JR WAY UC Br No. 33-0365L	15A	3			53					1	3	28		1				1					100	1	10	636	SEE DETAIL T, SHEET C-24 AND STRUCTURE SHEET 4
18	Ala	24	L+	R2.59	WB	MARTIN LUTHER KING JR WAY UC Br No. 33-0365K	15A	2			53					1	3	28		1									100	1	10	636	SEE DETAIL T, SHEET C-24 AND STRUCTURE SHEET 4
19	Ala	24	R+	R2.77	WB	52ND St UC Br No. 33-0416L	12A	3			56.5					1	3	28		1		45							100	1	10	678	SEE DETAIL JC, SHEET C-17 AND STRUCTURE SHEET 4
20	Ala	24	R+	R2.77	EB	52ND St UC Br No. 33-0416R	12A	3			53					1	2	24.6		1		41		1					100	1	10	636	SEE DETAIL HI, SHEET C-9 AND STRUCTURE SHEET 4
21	Ala	24	R+	R2.76	EB	NEAR LOCATION 20	12A	3									13	140				109											SEE DETAIL HI,SHEET C-9
22	Ala	24	R+	R2.90	EB	SHATTUCK Ave UC Br No. 33-0411R	12A	2			56.5					1	3	28		1		44							100	1	10	678	SEE DETAIL JC, SHEET C-17 AND STRUCTURE SHEET 4
23	Ala	24	R+	R3.27	WB	WB ON-RAMP FROM CLAREMONT Ave	12A	2			61.5					1	3	28		1		47		1					100	1	10	738	SEE DETAIL JC, SHEET C-17 AND STRUCTURE SHEET 6
24	Ala	24	R+	R3.30	EB	CLAREMONT Ave UC Br No. 33-0414R	12A	3			56.5					1	3	28		1		44					10	10	100	1	10	678	SEE DETAIL JC, SHEET C-17 AND STRUCTURE SHEET 4
25	Ala	24	R+	R3.30	WB	CLAREMONT Ave UC Br No. 33-0414L	15A	3			70					1	10	96		1		131			1	1			100	1	10	840	SEE DETAIL P, SHEET C-21 AND STRUCTURE SHEET 4
26	Ala	24	R+	R3.38	WB	CLAREMONT Ave UC Br No. 33-0414K OFF-RAMP TO TELEGRAPH Ave	12A		53		56.5	0.28		53		1	3	28		1		44		1					100	1	10	678	SEE DETAIL JA, SHEET C-16 AND STRUCTURE SHEET 4
27	Ala	24	L+	R3.38	WB	CLAREMONT Ave UC Br No. 33-0414K OFF-RAMP TO TELEGRAPH Ave	15A	1			70					1	10	96		1		151							100	1	10	840	SEE DETAIL P, SHEET C-21 AND STRUCTURE SHEET 4
28	Ala	24	R+	R3.54	EB	COLLEGE Ave UC Br No. 33-0417R	12B	1			56.5					1	3	28		1		44		1					100	1	10	678	SEE DETAIL JC, SHEET C-17 AND STRUCTURE SHEET 4
29	Ala	24	R+	R3.97	WB	PRESLEY WAY UC Br No. 33-0418L ON-RAMP	12B	2	25		90.5	0.28		25	1	1	3	28	1	1		89							100	1	10	1086	SEE DETAIL ID, SHEET C-13 AND STRUCTURE SHEET 4
30	Ala	24	R+	R4.15	EB	PATTON St UC Br No. 33-0419R	12B	4			78.4				1	1	1	12.4	1	1		77		1					100	1	10	941	SEE DETAIL L, SHEET C-18 AND STRUCTURE SHEET 4
31	Ala	24	R+	R4.15	WB	PATTON St UC Br No. 33-0419L	12B	3			78.4				1	1			1	1		67		1					100	1	10	941	SEE DETAIL LA, SHEET C-19 AND STRUCTURE SHEET 4
32	Ala	24	R+	R4.21	WB	PATTON St UC Br No. 33-0419K OFF-RAMP TO BROADWAY	12A	2			56.5					1	3	28		1		44		1					100	1	10	678	SEE DETAIL JC, SHEET C-17 AND STRUCTURE SHEET 4
33	Ala	24	L+	R4.21	WB	PATTON St UC Br No. 33-0419K OFF-RAMP TO BROADWAY	12C	1		1	63					1				1		51		1					100	1	10	756	SEE DETAIL IG, SHEET C-14 AND STRUCTURE SHEET 4
34	Ala	24	R+	R4.44	EB	GOLDEN GATE Ave UC Br No. 33-0420R	12B	2			100				1	1	3	34	1	1		93							100	1	10	1200	SEE DETAIL HJ, SHEET C-10 AND STRUCTURE SHEET 4
35	Ala	24	R+	R4.44	WB	GOLDEN GATE Ave UC Br No. 33-0420L	12A	1			56.5					1	3	28		1		44							100	1	10	678	SEE DETAIL JC, SHEET C-17 AND STRUCTURE SHEET 4
36	Ala	24	Med	R4.44	WB	GOLDEN GATE Ave UC Br No. 33-0420L	12C	1		1	60					1				1		51							100	1	10	720	SEE DETAIL IG, SHEET C-14 AND STRUCTURE SHEET 4
						SUBTOTAL (ROUTE 24)		87	821	2	2560	6.63	553	268	7	37	243	2435	7	37		3525		11	6	5	10	10	3700	37	370	30720	

* FOR DETAIL NOT SHOWN, SEE Std PLAN
** TYPE F
(N) NOT A SEPARATE PAY ITEM, FOR INFORMATION ONLY

3 **REPLACED PER ADDENDUM No. 3 DATED SEPTEMBER 25, 2015**

SUMMARY OF QUANTITIES
Q-1

STATE OF CALIFORNIA - DEPARTMENT OF TRANSPORTATION
Caltrans® DESIGN

FUNCTIONAL SUPERVISOR: GEORGE LO
CALCULATED-DESIGNED BY: KAN YU
CHECKED BY: THANH NGUYEN
REVISED BY: TN
DATE REVISED: 3/23/15

LAST REVISION 04-23-15
DATE PLOTTED => 24-SEP-2015
TIME PLOTTED => 15:16

Dist	COUNTY	ROUTE	POST MILES TOTAL PROJECT	SHEET No.	TOTAL SHEETS
04	Ala	24,80,84 92,880,*etc.*	Var	57	126

REGISTERED CIVIL ENGINEER 4/20/15 DATE

4-27-15
PLANS APPROVAL DATE

REGISTERED PROFESSIONAL ENGINEER Thanh C. Nguyen No. 58137 Exp. 6-30-16 CIVIL STATE OF CALIFORNIA

THE STATE OF CALIFORNIA OR ITS OFFICERS OR AGENTS SHALL NOT BE RESPONSIBLE FOR THE ACCURACY OR COMPLETENESS OF SCANNED COPIES OF THIS PLAN SHEET.

3

ROADWAY QUANTITIES

PROJECT WORK LOCATION: LOCATION No.	COUNTY	ROUTE	SIDE	PM	DIRECTION	DESCRIPTION	MIDWEST GUARDRAIL SYSTEM REVISED STANDARD PLAN LAYOUT *	REMOVE MARKER (EA)	REMOVE AC DIKE (LF)	BURIED END POST ANCHOR (N) (LF)	REMOVE GUARDRAIL (LF)	MINOR HMA (TON)	PLACE HMA DIKE TYPE C (LF)	PLACE HMA DIKE TYPE F (LF)	OBJECT MARKER (TYPE L-1) (EA)	OBJECT MARKER (TYPE P) (EA)	GUARD RAILING DELINEATOR ** (EA)	MIDWEST GUARDRAIL SYSTEM (WOOD POST) (LF)	ALTERNATIVE FLARED TERMINAL SYSTEM (EA)	TRANSITION RAILING (TYPE WB-31) (EA)	TRANSITION RAILING (TYPE STB) (EA)	VEGETATION CONTROL (MINOR CONCRETE) (SQYD)	RUBBER WEED MAT VEGETATION CONTROL (SQYD)	RESET ROADSIDE SIGN (EA)	TERMINAL SYSTEM (TYPE CAT-~~350~~) (EA)	REMOVE CRASH CUSHION (SAND FILLED) (EA)	REMOVE FENCE (LF)	FENCE (TYPE WM, METAL POST) (LF)	TEMPORARY RAILING (TYPE K) (LF)	TEMPORARY ALTERNATIVE CRASH CUSHION (EA)	CHANNELIZER (SURFACE MOUNTED) (EA)	TREATED WOOD WASTE (LB)	NOTES
39	Ala	80	Lt	4.45	WB	W80-S13 CONNECTOR OC Br No. 33-0190F OFF-RAMP TO ASHBY Ave	12B	2			63				1	1			1	1			71						100	1	10	756	SEE DETAIL D, SHEET C-3 AND STRUCTURE SHEET 16
40	Ala	80	Rt	4.45	WB	W80-S13 CONNECTOR OC Br No. 33-0190F OFF-RAMP TO ASHBY Ave	12B	3			47				1	1			1	1			98	1					100	1	10	564	SEE DETAIL L, SHEET C-18 AND STRUCTURE SHEET 15
43	Ala	80	Lt	5.00	EB	ON-RAMP ROUTE 13/80	12B	2			63				1	1			1	1		64										756	SEE DETAIL F, SHEET C-4
45	Ala	80	Rt	5.82	EB	UNIVERSITY Ave OC (Br No. 33-0023) ABUTMENT No. 1B OFF-RAMP WALL	12B	1			100					1	6	63		1		78							100	1	10	1200	SEE DETAIL G, SHEET C-5 AND STRUCTURE SHEET 14
48	Ala	80	Rt	6.62	WB	GILMAN St UC Br No. 33-0127	12B	6	88		119	0.69	63	25	1	1	6	56	1	1			108	1								1428	SEE DETAIL H, SHEET C-6
49	Ala	80	Rt	6.62	EB	GILMAN St UC Br No. 33-0127	12B	5	138		119	1.26	63	75	1	1	6	56	1	1		108		1								1428	SEE DETAIL HB, SHEET C-7
50	Ala	80	Rt	6.62	EB	GILMAN St UC Br No. 33-0127	12B	3	43		80	0.50		43	1		4	42	1			78										960	SEE DETAIL HC-, SHEET C-7
51	Ala	80	Rt	6.62	EB	GILMAN St UC Br No. 33-0127	12B	3			66				1		3	28	1			67		1								792	SEE DETAIL IH, SHEET C-15
53	Ala	80	Rt	7.30	EB	ON-RAMP FROM BUCHANAN St	12B	6			63				1	1			1	1		64										756	SEE DETAIL B, SHEET C-1
54	Ala	80	Lt	7.30	EB	ON-RAMP FROM BUCHANAN St	12B	2			65				1	1			1	1		64										780	SEE DETAIL M, SHEET C-19
55	Ala	80	Lt	7.30	WB	E580-W80 CONNECTOR	12B	4	63		59	0.59	25	38	1	1			1	1			64	1								708	SEE DETAIL IB, SHEET C-12
56	Ala	80	Rt	7.20	WB	EL CERRITO SEPARATION AND OH (Br No. 33-0051R)	12B	4	63		130	0.40	63		1	1	6	68	1	1			116	1								1560	SEE DETAIL IF, SHEET C-14
SUBTOTAL (ROUTE 80)								41	395		974	3.44	214	181	11	10	31	313	11	10		523	457	6					300	3	30	11688	
57	Ala	84	Rt	R4.66	WB	NEWARK OH Br No. 33-0509L	12B	3	82.5		119	0.93		83	1	1	3	55	1	1		108		1								1428	SEE DETAIL HD, SHEET C-8
58	Ala	84	Med	R4.66	WB	NEWARK OH Br No. 33-0509L		2			27						1				1	21										324	SEE DETAIL FA, SHEET C-5
59	Ala	84	Rt	R4.66	EB	NEWARK OH Br No. 33-0509R	12B	5	82.5		62	0.94		83	1	1	3		1	1		64										744	SEE DETAIL HD, SHEET C-8
60	Ala	84	Lt	R4.66	EB	NEWARK OH Br No. 33-0509R	12E	2			60					1	1	62		1		102										720	SEE DETAIL V, SHEET C-27
61	Ala	84	Rt	R4.88	WB	NEWARK Blvd UC Br No. 33-0510R/L	12B	5			63				1	1	3		1	1		64										756	SEE DETAIL A, SHEET C-1
62	Ala	84	Rt	R4.88	EB	NEWARK Blvd UC Br No. 33-0510R/L	12B	1			53					1	1	28		1		41										636	SEE DETAIL O, SHEET C-20
63	Ala	84	Med	R4.88	EB	NEWARK Blvd UC Br No. 33-0510R/L		2			27						1				1	21										324	SEE DETAIL FA, SHEET C-5
64	Ala	84	Rt	R5.33	EB	NEWARK SEAL SLAB, Br No. 33-0512M	12B				64				1	1	3		1	1		68							100	1	10	768	SEE DETAIL L, SHEET C-8 AND STRUCTURE SHEET 11
65	Ala	84	Rt	R5.53	WB	NEWARK SEAL SLAB, Br No. 33-0512M	12B	3	62.5		64	0.41	62.5		1	1	1		1	1		68		1					100	1	10	768	SEE DETAIL IC, SHEET C-12 AND STRUCTURE SHEET 11
66	Ala	84	Rt	R5.98	WB	ROUTE 84/880 SEPARATION, Br No. 33-0243L	12B	2	62.5		61	0.41	62.5		1	1	3		1	1		64		1								732	SEE DETAIL IE, SHEET C-13
SUBTOTAL (ROUTE 84)								25	290		600	2.69	125	166	6	8	20	145	6	8	2	621		3					200	2	20	7200	
69	Ala	92	Rt	R5.25	WB	WB ROUTE 92 APPROACHING INDUSTRIAL Blvd AT SOUND WALL	12B	5	88		108	0.69	63	25	1	1	3		1	1		69							100	1	10	1296	SEE DETAIL HA, SHEET C-6 AND STRUCTURE SHEET 12
SUBTOTAL (ROUTE 92)								5	88		108	0.69	63	25	1	1	3		1	1		69							100	1	10	1296	

* FOR DETAIL NOT SHOWN, SEE Std PLAN
** TYPE F
(N) NOT A SEPARATE PAY ITEM, FOR INFORMATION ONLY

3 **REPLACED PER ADDENDUM No. 3 DATED SEPTEMBER 25, 2015**

SUMMARY OF QUANTITIES Q-2

THANH NGUYEN — REVISED BY TN
KAN YU — DATE REVISED 3/23/15
CALCULATED-DESIGNED BY
CHECKED BY
FUNCTIONAL SUPERVISOR GEORGE LO

STATE OF CALIFORNIA - DEPARTMENT OF TRANSPORTATION
Caltrans DESIGN

LAST REVISION 04-15-15 | DATE PLOTTED => 24-SEP-2015 | TIME PLOTTED => 15:16

Dist	COUNTY	ROUTE	POST MILES TOTAL PROJECT	SHEET No.	TOTAL SHEETS
04	Ala	24,80,84 92,880,etc.	Var	58	126

REGISTERED CIVIL ENGINEER 4/20/15 DATE

4-27-15
PLANS APPROVAL DATE

REGISTERED PROFESSIONAL ENGINEER Thanh C. Nguyen No. 58137 Exp. 6-30-16 CIVIL STATE OF CALIFORNIA

THE STATE OF CALIFORNIA OR ITS OFFICERS OR AGENTS SHALL NOT BE RESPONSIBLE FOR THE ACCURACY OR COMPLETENESS OF SCANNED COPIES OF THIS PLAN SHEET.

3 **REPLACED PER ADDENDUM No. 3 DATED SEPTEMBER 25, 2015** 3

ROADWAY QUANTITIES

PROJECT WORK LOCATION: LOCATION No.	COUNTY	ROUTE	SIDE	PM	DIRECTION	DESCRIPTION	MIDWEST GUARDRAIL SYSTEM REVISED STANDARD PLAN LAYOUT *	REMOVE MARKER (EA)	REMOVE AC DIKE (LF)	BURIED END POST ANCHOR (N) (LF)	REMOVE GUARDRAIL (LF)	MINOR HMA (TON)	PLACE HMA DIKE TYPE C (LF)	PLACE HMA DIKE TYPE F (LF)	OBJECT MARKER (TYPE L-1) (EA)	OBJECT MARKER (TYPE P) (EA)	GUARD RAILING DELINEATOR ** (EA)	MIDWEST GUARDRAIL SYSTEM (WOOD POST) (LF)	ALTERNATIVE FLARED TERMINAL SYSTEM (EA)	TRANSITION RAILING (TYPE WB-31) (EA)	TRANSITION RAILING (TYPE STB) (EA)	VEGETATION CONTROL (MINOR CONCRETE) (SQYD)	RUBBER WEED MAT VEGETATION CONTROL (SQYD)	RESET ROADSIDE SIGN (EA)	TERMINAL SYSTEM (TYPE CAT-350) (EA)	REMOVE CRASH CUSHION (SAND FILLED) (EA)	REMOVE FENCE (LF)	FENCE (TYPE WM, METAL POST) (LF)	TEMPORARY RAILING (TYPE K) (LF)	TEMPORARY ALTERNATIVE CRASH CUSHION (EA)	CHANNELIZER (SURFACE MOUNTED) (EA)	TREATED WOOD WASTE (LB)	NOTES
72	Ala	880	R+	R0.18	SB	OFF-RAMP TO DIXON LANDING	12B	4	62.5		47	0.71	62.5		1	1	3		1	1		64		1									564	SEE DETAIL IE, SHEET C-13
73	Ala	880	R+	R0.26	SB	AT SCOTT CREEK, Br No. 33-0242	12B	2	50		140	0.33		50	1	1	1	78	1	1		109		1			10	10					1680	SEE DETAIL HF, SHEET C-8
74	Ala	880	R+	R0.26	NB	AT SCOTT CREEK, Br No. 33-0242	12B	2			115					1	1	90		1		89		1			10	10					1380	SEE DETAIL HL, SHEET C-10
77	Ala	880	L+	10.30	SB	ON-RAMP FROM WB DECOTO Rd	12B	2			145				1	1	1	83	1	1		128		1									1740	SEE DETAIL C, SHEET C-2
78	Ala	880	R+	10.31	SB	S880/W84 CONNECTOR PUC Br No. 33-0553F	12B	2	88		68	0.86	62.5	25	1	1	1	6	1	1		68											816	SEE DETAIL HB, SHEET C-7
79	Ala	880	L+	10.31	SB	S880/W84 CONNECTOR PUC Br No. 33-0553F	15A	2			165					1	1	126		1		151			1								1980	SEE DETAIL W, SHEET C-28
80	Ala	880	R+	10.44	SB	CONNECTOR SB TO WB ROUTE 84 AT DECOTO Rd	12B	2			64				1	1	1		1	1		68		1					100	1	10	768	SEE DETAIL L, SHEET C-18 AND STRUCTURE SHEET 11
81	Ala	880	R+	10.66	SB	CRANDALL CREEK Br No. 33-0273	12B	2			70				1	1	1		1	1		64										840	SEE DETAIL B, SHEET C-1
82	Ala	880	R+	10.66	NB	CRANDALL CREEK Br No. 33-0273	12B	1	25		53	0.16		25		1	1	28		1		41										636	SEE DETAIL JB, SHEET C-16
83	Ala	880	R+	10.93	SB	SB AT UNDERSIDE OF PASEO PADRE Pkwy Br	12B	3			63				1	1	1		1	1		68		1					100	1	10	756	SEE DETAIL L, SHEET C-18 AND STRUCTURE SHEET 11
84	Ala	880	R+	11.31	NB	NB AT ALVARADO Blvd AND FREMONT Blvd OFF-RAMP	12B	1			60					1	1	28		1		47							100	1	10	720	SEE DETAIL JC, SHEET C-17 AND STRUCTURE SHEET 10
85	Ala	880	R+	11.31	SB	ON-RAMP FROM EB ALVARADO Blvd TO SB ROUTE 880	12B	2	25		55	0.16		25	1	1	1		1	1		71							100	1	10	660	SEE DETAIL ID, SHEET C-13 AND STRUCTURE SHEET 12
87	Ala	880	R+	11.80	SB	PATTERSON SLOUGH Br No. 33-0250	12B	2	25		105	0.16		25	1	1	1	42	1	1		97											1260	SEE DETAIL HF, SHEET C-8
88	Ala	880	R+	11.80	NB	PATTERSON SLOUGH Br No. 33-0250	12B	2			150				1	1	1	88	1	1		133											1800	SEE DETAIL HL, SHEET C-10
90	Ala	880	R+	13.67	SB	WHIPPLE Rd UC Br No. 33-0245	15A	2			53					1	1	28		1		41											636	SEE DETAIL S, SHEET C-23
91	Ala	880	L+	13.67	SB	OFF-RAMP TO WHIPPLE ROAD, Br No. 33-0245K	15A	2			53					1	1	28		1		41											636	SEE DETAIL S, SHEET C-23
92	Ala	880	R+	13.81	NB	ALQUIRE Rd OH Br No. 33-0246	15A	2			53					1	1	28		1		41											636	SEE DETAIL S, SHEET C-23
94	Ala	880	L+	13.81	NB	ON-RAMP FROM WHIPPLE Rd WB, AT ALQUIRE Rd OH, Br No. 33-0246S	15A				35					1	1	60		1		66											420	SEE DETAIL S, SHEET C-23
96	Ala	880	R+	14.18	SB	WARD CREEK BRIDGE, Br No. 33-0251	12B	2			63				1	1	1		1	1		64											756	SEE DETAIL B, SHEET C-1
98	Ala	880	R+	14.54	SB	SB ON-RAMP FROM WB INDUSTRIAL Pkwy BEFORE Br No. 33-0398	12B	2			72				1	1	1		1	1		72							100	1	10	864	SEE DETAIL HH, SHEET C-9 AND STRUCTURE SHEET 14
99	Ala	880	R+	14.52	SB	ON-RAMP FROM INDUSTRIAL Pkwy, AFTER OC	12B	2			46.7					1	1			1		19											560	SEE DETAIL BA, SHEET C-2
100	Ala	880	R+	14.54	NB	INDUSTRIAL Pkwy OC Br No. 33-0398	16B	2			80				1	1	1		1	1		77							100	1	10	960	SEE DETAIL L, SHEET C-8 AND STRUCTURE SHEETS 2, 3, 18, 19
102	Ala	880	R+	18.35	NB	A St UC Br No. 33-0179	12B	2	25		53	0.16		25		1	1	28		1		41		1									636	SEE DETAIL JB, SHEET C-16
103	Ala	880	L+	19.96	SB	ON-RAMP FROM HESPERIAN Blvd	12B	3			45				1	1	3		1	1		64											540	SEE DETAIL M, SHEET C-19
105	Ala	880	R+	20.32	SB	LEWELLING Blvd UC Br No. 33-0176	12B	2	25		53	0.16		25		1	1	28		1		41											636	SEE DETAIL JB, SHEET C-16
109	Ala	880	R+	20.95	NB	ON-RAMP AT ORA LOMA DITCH, Br No. 33-0239	12B	1			57					1	1	28		1		44					10	10	100	1	10	684	SEE DETAIL JC, SHEET C-17 AND STRUCTURE SHEET 8
112	Ala	880	L+	24.72	NB	NB AT 98TH Ave OC ON-RAMP FROM EB 98TH Ave	12B	4			61				1	1	3		1	1		74		2					100	1	10	732	SEE DETAIL M, SHEET C-19 AND STRUCTURE SHEET 13
115	Ala	880	R+	31.31	SB	ON-RAMP FROM BROADWAY	15A	2			150					1	1	150		1		118		2	1	1							1800	SEE DETAIL U, SHEET C-25
116	Ala	880	L+	31.31	SB	ON-RAMP FROM BROADWAY	12B	1			53					1	1	28		1		41		1									636	SEE DETAIL J, SHEET C-15
117	Ala	880	R+	31.36	SB	ON-RAMP FROM BROADWAY	15A	1			128					1	1	158		1				1	1								1536	SEE DETAIL UA, SHEET C-26
118	Ala	880	R+	31.42	NB	5TH AND 6TH VIADUCT ON-RAMP AT BROADWAY Br No. 33-0200	12B	1	62		53	0.71	62.5		1	1	3		1	1		69							100	1	10	636	SEE DETAIL IC, SHEET C-12 AND STRUCTURE SHEET 7
119	Ala	880	R+	R32.28	SB	ON-RAMP FROM ADELINE/5TH St	12B	1	25		127	0.28	25		1	1	3	65	1	1		115											1524	SEE DETAIL N, SHEET C-20
120	Ala	880	L+	R32.28	SB	ON-RAMP FROM ADELINE/5TH St	12B	1			67				1	1	3		1	1		64											804	SEE DETAIL M, SHEET C-19
121	Ala	880	R+	R32.79	NB	ON-RAMP FROM UNION St AT Beg OF Br	12B	4	25		63	0.28	25		1	1	1		1	1		64		1									756	SEE DETAIL I, SHEET C-11
122	Ala	880	L+	R32.79	NB	ON-RAMP FROM UNION St AT Beg OF Br	12B	3			60				1	1	3		1	1		64											720	SEE DETAIL M, SHEET C-19
123	Ala	880	R+	R32.86	SB	Br No. 33-0616L	12B	3			76				1	1	3	13	1	1		74		1									912	SEE DETAIL HL, SHEET C-10
124	Ala	880	L+	R32.86	SB	Br No. 33-0616L 5TH AND 6TH St VIADUCT	12B				93				1	1	3	31	1	1		88											1116	SEE DETAIL C, SHEET C-2
125	Ala	880	R+	R33.20	SB	BETWEEN 7TH ON-RAMP AND BROADWAY OFF-RAMP	12A	2			53					1	1	28		1		41											636	SEE DETAIL J, SHEET C-15
126	Ala	880	R+	R33.27	NB	NB AT 7TH St OFF-RAMP	12B	5			76				1	1	1		1	1		76		1			10	10	100	1	10	912	SEE DETAIL L, SHEET C-18 AND STRUCTURE SHEET 11
127	Ala	880	L+	R33.27	NB	OFF-RAMP TO 7TH St	12B	3			77				1	1	3		1	1		64		1									924	SEE DETAIL M, SHEET C-19
128	Ala	880	R+	R33.47	SB	AT 7TH St UC	12B	2			110				1	1	1	48	1	1		102											1320	SEE DETAIL HL, SHEET C-10
129	Ala	880	L+	R33.47	SB	AT 7TH St UC		2			27						1				1	21											324	SEE DETAIL FA, SHEET C-5
130	Ala	880	R+	R33.47	NB	AT 7TH St UC	12B	5	62.5		119	0.73	62.5		1	1	3	56	1	1		108											1428	SEE DETAIL K, SHEET C-18
131	Ala	880	L+	R33.47	NB	AT 7TH St UC		2			27						1				1	21											324	SEE DETAIL FA, SHEET C-5
132	Ala	880	L+	R34.10	NB	BEGINNING CONNECTOR TO EB ROUTE 80					27						1				1	21											324	SEE DETAIL FA, SHEET C-5
133	Ala	880	R+	R34.10	NB	NB BEGINNING CONNECTOR TO EB ROUTE 80	12B	2			81				1	1	3	28	1	1		96		1					100	1	10	972	SEE DETAIL ER, SHEET C-3 AND STRUCTURE SHEET 9
						SUBTOTAL (ROUTE 880)		95	500		3492	4.7	300	200	27	43	70	1402	27	43	3	3130		18	3	1	40	40	1100	11	110	41904	

* FOR DETAIL NOT SHOWN, SEE Std PLAN
** TYPE F
(N) NOT A SEPARATE PAY ITEM, FOR INFORMATION ONLY

SUMMARY OF QUANTITIES Q-3

STATE OF CALIFORNIA - DEPARTMENT OF TRANSPORTATION
Caltrans DESIGN
FUNCTIONAL SUPERVISOR GEORGE LO
CALCULATED-DESIGNED BY THANH NGUYEN
CHECKED BY KAN YU
REVISED BY TN
DATE REVISED 3/23/15

LAST REVISION 04-15-15
DATE PLOTTED => 24-SEP-2015
TIME PLOTTED => 15:16

Dist	COUNTY	ROUTE	POST MILES TOTAL PROJECT	SHEET No.	TOTAL SHEETS
04	Ala	24,80,84 92,880,*etc.*	Var	59	126

REGISTERED CIVIL ENGINEER 4/20/15 DATE

4-27-15
PLANS APPROVAL DATE

REGISTERED PROFESSIONAL ENGINEER Thanh C. Nguyen No. 58137 Exp. 6-30-16 CIVIL STATE OF CALIFORNIA

THE STATE OF CALIFORNIA OR ITS OFFICERS OR AGENTS SHALL NOT BE RESPONSIBLE FOR THE ACCURACY OR COMPLETENESS OF SCANNED COPIES OF THIS PLAN SHEET.

3

ROADWAY QUANTITIES

PROJECT WORK LOCATION: LOCATION No.	COUNTY	ROUTE	SIDE	PM	DIRECTION	DESCRIPTION	MIDWEST GUARDRAIL SYSTEM REVISED STANDARD PLAN LAYOUT *	REMOVE MARKER (EA)	REMOVE AC DIKE (LF)	BURIED END POST ANCHOR (N) (LF)	REMOVE GUARDRAIL (LF)	MINOR HMA (TON)	PLACE HMA DIKE TYPE C (LF)	PLACE HMA DIKE TYPE F (LF)	OBJECT MARKER (TYPE L-1) (EA)	OBJECT MARKER (TYPE P) (EA)	GUARD RAILING DELINEATOR ** (EA)	MIDWEST GUARDRAIL SYSTEM (WOOD POST) (LF)	ALTERNATIVE FLARED TERMINAL SYSTEM (EA)	TRANSITION RAILING (TYPE WB-31) (EA)	TRANSITION RAILING (TYPE STB) (EA)	VEGETATION CONTROL (MINOR CONCRETE) (SQYD)	RUBBER WEED MAT VEGETATION CONTROL (SQYD)	RESET ROADSIDE SIGN (EA)	TERMINAL SYSTEM (TYPE CAT-~~350~~) (EA)	REMOVE CRASH CUSHION (SAND FILLED) (EA)	REMOVE FENCE (LF)	FENCE (TYPE WM, METAL POST) (LF)	TEMPORARY RAILING (TYPE K) (LF)	TEMPORARY ALTERNATIVE CRASH CUSHION (EA)	CHANNELIZER (SURFACE MOUNTED) (EA)	TREATED WOOD WASTE (LB)	NOTES
135	Ala	980	R+	0.02	WB	ROUTE 980 CONNECTOR TO SB ROUTE 880 Br No. 33-0483F	12B	3			66.5				1	1	3		1	1		64											798	SEE DETAIL B, SHEET C-1
136	Ala	980	L+	1.33	EB	27TH St UC Br No. 33-0421R		1			53.3					1	1	28		1		41								100	1	10	640	SEE DETAIL JD, SHEET C-17 AND STRUCTURE SHEET 5
137	Ala	980	R+	1.33	EB	27TH St UC Br No. 33-0421R	12A	2			56.5					1	2	28		1		44		1						100	1	10	678	SEE DETAIL JC, SHEET C-17 AND STRUCTURE SHEET 4
138	Ala	980	R+	1.33	WB	27TH St UC Br No. 33-0421L	12B	3	57.5		53.2	0.53	37.5	25	1	1	3		1	1		67		3						100	1	10	638	SEE DETAIL IA, SHEET C-11 AND STRUCTURE SHEET 4
139	Ala	980	R+	1.68	EB	30TH St UC Br No. 33-0350R	15A	2			50.5					1	2	111		1		143			1	1				100	1	10	606	SEE DETAIL IA, SHEET C-21 AND STRUCTURE SHEET 4
140	Ala	980	L+	1.68	EB	CONNECTOR TO ROUTE 580 @ 30TH St UC Br No. 33-0350G	15A	1			50.5					1	2	111		1		162								100	1	10	606	SEE DETAIL IA, SHEET C-21 AND STRUCTURE SHEET 4
141	Ala	980	R+	1.68	WB	END Br No. 33-0350L	12B	4	62.5		50.5	0.41	62.5		1	1	3		1	1		67		1						100	1	10	606	SEE DETAIL IC, SHEET C-12 AND STRUCTURE SHEET 4
142	Ala	980	L+	1.68	WB	OFF-RAMP TO 27TH St Br No. 33-0134J	12B	2			105				1	1	5	43	1	1		100								100	1	10	1260	SEE DETAIL EL, SHEET C-4 AND STRUCTURE SHEET 4
143	Ala	980	R+	1.96	WB	OFF-RAMP TO 27TH St Br No. 33-0303H	12A	2			59					1	2	28		1		46		1						100	1	10	708	SEE DETAIL JC, SHEET C-17 AND STRUCTURE SHEET 17
SUBTOTAL (ROUTE 980)								20	120		545	0.94	100	25	4	9	23	349	4	9		734		6	1	1				800	8	80	6540	
SUBTOTAL (ROUTE 24)								87	821	2	2560	6.63	553	268	7	37	243	2435	7	37		3525		11	6	5	10	10	3700	37	370	30720	
SUBTOTAL (ROUTE 80)								41	395		974	3.44	214	181	11	10	31	313	11	10		523	457	6					300	3	30	11688	
SUBTOTAL (ROUTE 84)								25	290		600	2.69	125	166	6	8	20	145	6	8	2	621		3					200	2	20	7200	
SUBTOTAL (ROUTE 92)								5	88		108	0.69	63	25	1	1	3		1	1		69							100	1	10	1296	
SUBTOTAL (ROUTE 880)								95	500		3492	4.70	300	200	27	43	70	1402	27	43	3	3130		18	3	1	40	40	1100	11	110	41904	
GRAND TOTAL								273	2214	2	8279	18.9	1355	865	56	108	390	4644	56	108	5	8602	457	44	10	7	50	50	6200	62	620	99348	

* FOR DETAIL NOT SHOWN, SEE Std PLAN
** TYPE F
(N) NOT A SEPARATE PAY ITEM, FOR INFORMATION ONLY

3 **REPLACED PER ADDENDUM No. 3 DATED SEPTEMBER 25, 2015**

SUMMARY OF QUANTITIES
Q-4

THANH NGUYEN — REVISED BY — TN
KAN YU — DATE REVISED — 3/23/15
CALCULATED-DESIGNED BY
CHECKED BY
FUNCTIONAL SUPERVISOR — GEORGE LO
STATE OF CALIFORNIA - DEPARTMENT OF TRANSPORTATION
Caltrans DESIGN

LAST REVISION 04-27-15 | DATE PLOTTED => 24-SEP-2015 | TIME PLOTTED => 15:16

Dist	COUNTY	ROUTE	POST MILES TOTAL PROJECT	SHEET No.	TOTAL SHEETS
04	Ala	24,80,84 92,880,*etc.*	Var	89A	126

Randell D. Hiatt
REGISTERED CIVIL ENGINEER

July 19, 2013
PLANS APPROVAL DATE

REGISTERED PROFESSIONAL ENGINEER Randell D. Hiatt No. C50200 Exp. 6-30-15 CIVIL STATE OF CALIFORNIA

THE STATE OF CALIFORNIA OR ITS OFFICERS OR AGENTS SHALL NOT BE RESPONSIBLE FOR THE ACCURACY OR COMPLETENESS OF SCANNED COPIES OF THIS PLAN SHEET.

TO ACCOMPANY PLANS DATED 10-7-15

3

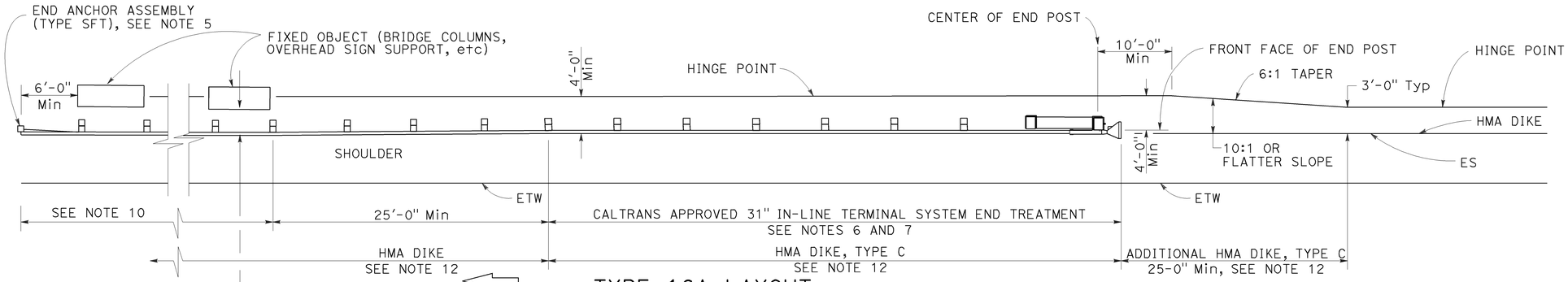

TYPE 16A LAYOUT

(MGS installation at roadside fixed object or objects with 31" in-line end treatment at traffic approach end of railing)
See Notes 11 and 12

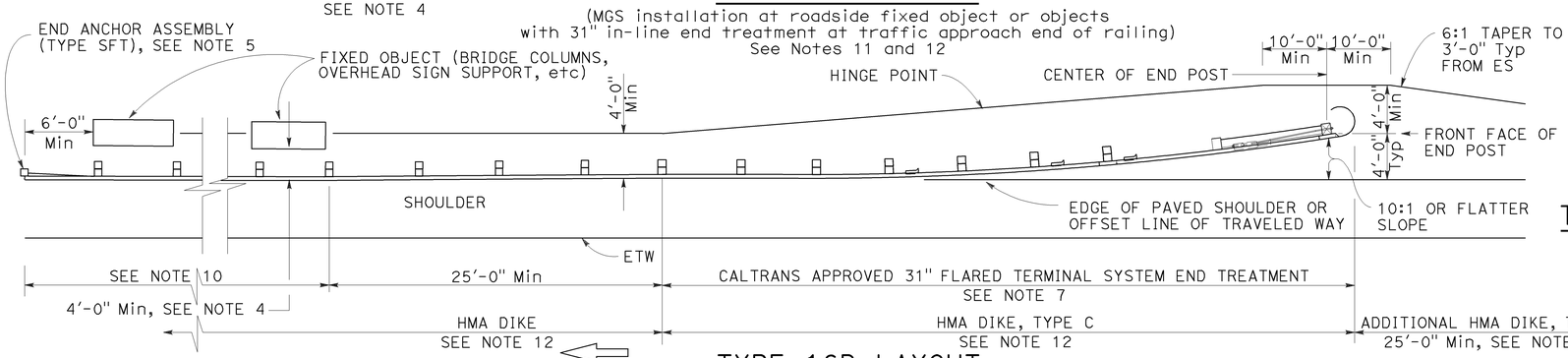

TYPE 16B LAYOUT

(MGS installation at roadside fixed object or objects with 31' flared end treatment at traffic approach end of railing)
See Notes 11 and 12

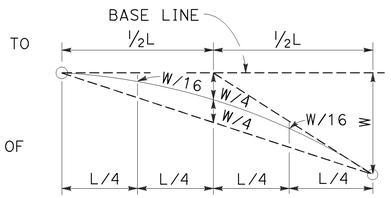

TYPIC AL PARABOLIC LAYOUT

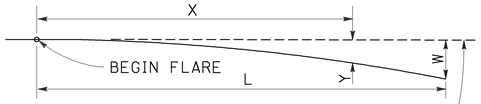

BASE LINE (EDGE OF PAVED SHOULDER OR OFFSET LINE OF EDGE OF TRAVELED WAY)

$$Y = \frac{WX^2}{L^2}$$

Y = OFFSET FROM BASE LINE
W = MAXIMUM OFFSET
X = DISTANCE ALONG BASE LINE
L = LENGTH OF FLARE

PARABOLIC FLARE OFFSETS

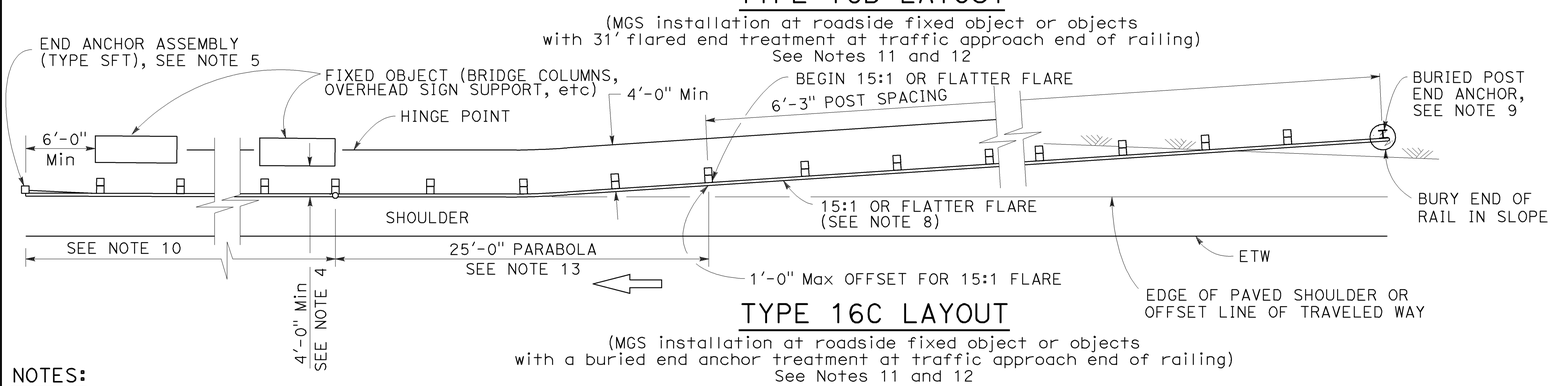

TYPE 16C LAYOUT

(MGS installation at roadside fixed object or objects with a buried end anchor treatment at traffic approach end of railing)
See Notes 11 and 12

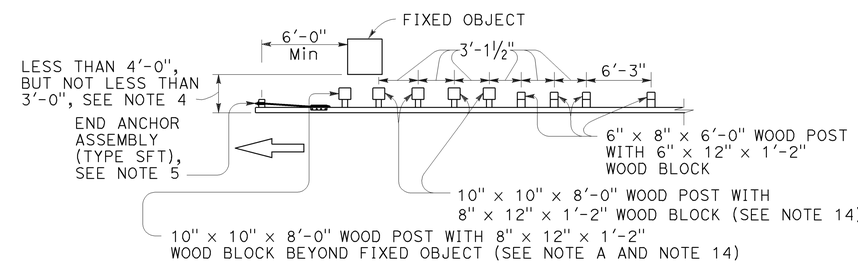

NOTE A: For a series of fixed objects (bridge columns, overhead sign supports, etc.) additional 10" x 10" x 8'-0" wood post with 8" x 12" x 1'-2" wood blocks at 3'-1½" center to center spacing are to be used between fixed objects.

STRENGTHENED MIDWEST GUARDRAIL SYSTEM SECTIONS FOR FIXED OBJECT

Use strengthened MGS sections with Types 16A, 16B or 16C layouts where minimum clearance between the face of the railing and fixed object(s) is less than 4'-0", but not less than 3'-0". See Note 4

NOTES:

1. Line post, blocks and hardware to be used are shown on Revised Standard Plans RSP A77L1, RSP A77L2, RSP A77M1, RSP A77N1 and RSP A77N2.
2. MGS post spacing to be 6'-3" center to center, except as otherwise noted.
3. Except as noted, line posts are 6" x 8" x 6'-0" wood with 6" x 12" x 1'-2" wood blocks. W6 x 8.5 or W6 x 9 steel posts, 6'-0" in length, with 6" x 12" x 1'-2" notched wood blocks or notched recycled plastic blocks may be used for 6" x 8" x 6'-0" wood line posts with 6" x 12" x 1'-2" wood blocks where applicable and when specified.
4. A 4'-0" minimum clearance is required between the face of the railing and the face of a fixed object located directly behind MGS sections with post spacing of 6'-3". Construct MGS as shown in the detail "Strengthened Midwest Guardrail System Sections for Fixed Object" on this plan, where the clearance between the face of the railing and the face of a fixed object is less than 4'-0", but not less than 3'-0". Where the clearance is less than 3'-0", a concrete wall or barrier should be constructed to shield the fixed object(s).
5. For End Anchor Assembly (Type SFT) details, see Revised Standard Plan RSP A77S1.
6. 31" in-line terminal system end treatments are used where site conditions will not accommodate a 31" flared end treatment.
7. The type of 31" terminal system to be used will be shown on the Project Plans.
8. The 15:1 or flatter flare used with Type 16C Layout is based on the edge of the paved shoulder or offset line of edge of the traveled way. The length of MGS within the 15:1 or flatter flare is based on site conditions and should be a length equal to multiples of 12'-6".
9. For details of the Buried Post End Anchor used with Type 16C Layout, see Revised Standard Plan RSP A77T2.
10. As site conditions dictate, construct additional MGS to shield fixed object(s). Additional MGS length equal to multiples of 12'-6". Post spacing at 6'-3" except as specified in Note 4.
11. Layout Types 16A, 16B or 16C are typically used where MGS is recommended to shield roadside fixed object(s) and a crashworthy 31" end treatment is required for only one direction of traffic.
12. Where placement of dike is required with MGS, see Revised Standard Plan RSP A77N4 for dike positioning details.
13. For typical flare offsets for 25'-0" length parabola with maximum offset of 1'-0", see Revised Standard Plan RSP A77P1.
14. W6 x 15 steel post, 8'-0" in length, with 8" x 12" x 1'-2" notched wood block or notched recycled plastic blocks may be used in place of the 10" x 10" x 8'-0" wood post with 8" x 12" x 1'-2" wood block shown in the detail "Strengthened Midwest Guardrail System Sections for Fixed Object".

3 **ADDED PER ADDENDUM NO. 3 DATED SEPTEMBER 25, 2015**

STATE OF CALIFORNIA
DEPARTMENT OF TRANSPORTATION

MIDWEST GUARDRAIL SYSTEM TYPICAL LAYOUTS FOR ROADSIDE FIXED OBJECTS

NO SCALE

RSP A77R3 DATED JULY 19, 2013 SUPPLEMENTS THE STANDARD PLANS BOOK DATED 2010.

REVISED STANDARD PLAN RSP A77R3

2010 REVISED STANDARD PLAN RSP A77R3

6-20-13

Dist	COUNTY	ROUTE	POST MILES TOTAL PROJECT	SHEET No.	TOTAL SHEETS
04	Ala	24,80,84 92,880,etc.	Var	101A	126

Theresa Gabriel
REGISTERED ELECTRICAL ENGINEER

July 19, 2013
PLANS APPROVAL DATE

REGISTERED PROFESSIONAL ENGINEER Theresa Aziz Gabriel No. E15129 Exp. 6-30-14 ELECTRICAL STATE OF CALIFORNIA

THE STATE OF CALIFORNIA OR ITS OFFICERS OR AGENTS SHALL NOT BE RESPONSIBLE FOR THE ACCURACY OR COMPLETENESS OF SCANNED COPIES OF THIS PLAN SHEET.

TO ACCOMPANY PLANS DATED 10-7-15

LEGEND:

- AB — ABANDON. IF APPLIED TO CONDUIT, REMOVE CONDUCTORS
- BC — INSTALL PULL BOX IN EXISTING CONDUIT RUN
- BP — PEDESTRIAN BARRICADE, TYPE AS INDICATED ON PLAN
- CB — INSTALL CONDUIT INTO EXISTING PULL BOX
- CC — CONNECT NEW AND EXISTING CONDUIT. REMOVE EXISTING CONDUCTORS AND INSTALL CONDUCTORS AS INDICATED
- CF — CONDUIT TO REMAIN FOR FUTURE USE. REMOVE CONDUCTORS. INSTALL PULL TAPE
- DH — DETECTOR HANDHOLE
- FA — FOUNDATION TO BE ABANDONED
- IS — INSTALL SIGN ON SIGNAL MAST ARM
- NS — NO SLIP BASE ON STANDARD
- PEC — PHOTOELECTRIC CONTROL
- PEU — PHOTOELECTRIC UNIT
- RC — EQUIPMENT OR MATERIAL TO BE REMOVED AND BECOME THE PROPERTY OF THE CONTRACTOR
- RE — REMOVE ELECTROLIER, FUSES AND BALLAST. TAPE ENDS OF CONDUCTORS
- RL — RELOCATE EQUIPMENT
- RR — REMOVE AND REUSE EQUIPMENT
- RS — REMOVE AND SALVAGE EQUIPMENT
- SC — SPLICE NEW TO EXISTING CONDUCTORS
- SD — SERVICE DISCONNECT
- TSP — TELEPHONE SERVICE POINT

ABBREVIATIONS

APS	ACCESSIBLE PEDESTRIAN SIGNAL
BBS	BATTERY BACKUP SYSTEM
BC	BOLT CIRCLE
BPB	BICYCLE PUSH BUTTON
C	CONDUIT
CB	CIRCUIT BREAKER
CCTV	CLOSED CIRCUIT TELEVISION
Ckt	CIRCUIT
CMS	CHANGEABLE MESSAGE SIGN
Ctid	CALTRANS IDENTIFICATION
Comm	COMMUNICATION
DLC	LOOP DETECTOR LEAD-IN CABLE
EMS	EXTINGUISHABLE MESSAGE SIGN
EVUC	EMERGENCY VEHICLE UNIT CABLE
EVUD	EMERGENCY VEHICLE UNIT DETECTOR
FB	FLASHING BEACON
FBCA	FLASHING BEACON CONTROL ASSEMBLY
FBS	FLASHING BEACON WITH SLIP BASE
FO	FIBER OPTIC
G	EQUIPMENT GROUNDING CONDUCTOR
GB	GROUND BUS
GFCI	GROUND FAULT CIRCUIT INTERRUPTER
HAR	HIGHWAY ADVISORY RADIO
Hex	HEXAGONAL
HPS	HIGH PRESSURE SODIUM
IISNS	INTERNALLY ILLUMINATED STREET NAME SIGN
ISL	INDUCTION SIGN LIGHTING
LED	LIGHT EMITTING DIODE
LMA	LUMINAIRE MAST ARM
LPS	LOW PRESSURE SODIUM
Ltg	LIGHTING
Lum	LUMINAIRE
M	METERED
MAT	MAST ARM MOUNTING TOP ATTACHMENT
MAS	MAST ARM MOUNTING SIDE ATTACHMENT
M/M	MULTIPLE TO MULTIPLE TRANSFORMER
Mtg	MOUNTING
MV	MERCURY VAPOR LIGHTING FIXTURE
MVDS	MICROWAVE VEHICLE DETECTION SYSTEM
N	NEUTRAL (GROUNDED CONDUCTOR)
NB	NEUTRAL BUS
NC	NORMALLY CLOSE
NO	NORMALLY OPEN
P	CIRCUIT BREAKER'S POLE
PB	PULL BOX
PBA	PUSH BUTTON ASSEMBLY
PEC	PHOTOELECTRIC CONTROL
Ped	PEDESTRIAN
PEU	PHOTOELECTRIC UNIT
PT	CONDUIT WITH PULL TAPE
RE	RELOCATED EQUIPMENT
RM	RAMP METERING
RWIS	ROADSIDE WEATHER INFORMATION SYSTEM
SB	SLIP BASE
SIC	SIGNAL INTERCONNECT CABLE
Sig	SIGNAL
SMA	SIGNAL MAST ARM
SNS	STREET NAME SIGN
SP	SERVICE POINT
TDC	TELEPHONE DEMARCATION CABINET
TMS	TRAFFIC MONITORING STATION
TOS	TRAFFIC OPERATIONS SYSTEM
Veh	VEHICLE
VIVDS	VIDEO IMAGE VEHICLE DETECTION SYSTEM
WIM	WEIGH-IN-MOTION
Xfmr	TRANSFORMER

SOFFIT AND WALL MOUNTED LUMINAIRES

- PENDANT, 70 W HPS UNLESS OTHERWISE SPECIFIED
- FLUSH, 70 W HPS UNLESS OTHERWISE SPECIFIED
- WALL SURFACE, 70 W HPS UNLESS OTHERWISE SPECIFIED
- EXISTING SOFFIT OR WALL LUMINAIRE TO REMAIN UNMODIFIED
- EXISTING SOFFIT OR WALL LUMINAIRE TO BE MODIFIED AS SPECIFIED

NOTE:
Arrow indicates "street side" of luminaire.

COMMONLY USED SYMBOLS FOR UNITED STATES CUSTOMARY UNITS OF MEASUREMENT:

SYMBOL USED	DEFINITIONS
Ω	OHMS
min	MINUTE
s	SECOND
bps	BITS PER SECOND
Bps	BYTES PER SECOND
A	AMPERE
V	VOLT
V(dc)	VOLT (DIRECT CURRENT)
V(ac)	VOLT (ALTERNATING CURRENT)
FC	FOOT - CANDLE
W	WATTS
VA	VOLT-AMPERE
M	MEGA
k	KILO
m	MILLI
μ	MICRO
P	PICO
Hz	HERTZ

MISCELLANEOUS ELECTROLIERS

NEW	EXISTING	
		LUMINAIRE ON WOOD POLE
		NON-STANDARD ELECTROLIER (SEE PROJECT NOTES OR PROJECT PLANS)
		CITY ELECTROLIER
		ELECTROLIER FOUNDATION (FUTURE INSTALLATION)

NOTES:

1. HPS luminaires shall be 310 W HPS when installed on Type 21, 21D, 30, 31 and 32 Standards, unless otherwise specified. HPS luminaires shall be 200 W when installed on other type standards or poles, unless otherwise specified.
2. LED luminaires shall be 235 W when installed on Type 21, 21D, 30, 31 and 32 Standards, unless otherwise specified. LED luminaires shall be 165 W when installed on other type standards or poles, unless otherwise specified.
3. Luminaires shall be the cutoff type, ANSI Type III medium cutoff lighting distribution, unless otherwise specified.

STANDARD ELECTROLIER

NEW	EXISTING	STANDARD TYPE
		15
		15D
		15 STRUCTURE
		15D STRUCTURE
		21
		21D
		21 STRUCTURE
		21D STRUCTURE
		30
		31
		32

STATE OF CALIFORNIA
DEPARTMENT OF TRANSPORTATION

ELECTRICAL SYSTEMS (LEGEND AND ABBREVIATIONS)

NO SCALE

RSP ES-1A DATED JULY 19, 2013 SUPERSEDES STANDARD PLAN ES-1A DATED MAY 20, 2011 - PAGE 425 OF THE STANDARD PLANS BOOK DATED 2010.

REVISED STANDARD PLAN RSP ES-1A

3 **ADDED PER ADDENDUM NO. 3 DATED SEPTEMBER 25, 2015**

2010 REVISED STANDARD PLAN RSP ES-1A

7-15-13

Dist	COUNTY	ROUTE	POST MILES TOTAL PROJECT	SHEET No.	TOTAL SHEETS
04	Ala	24,80,84 92,880,etc.	Var	101B	126

Theresa Gabriel
REGISTERED ELECTRICAL ENGINEER

July 19, 2013
PLANS APPROVAL DATE

REGISTERED PROFESSIONAL ENGINEER Theresa Aziz Gabriel No. E15129 Exp. 6-30-14 ELECTRICAL STATE OF CALIFORNIA

THE STATE OF CALIFORNIA OR ITS OFFICERS OR AGENTS SHALL NOT BE RESPONSIBLE FOR THE ACCURACY OR COMPLETENESS OF SCANNED COPIES OF THIS PLAN SHEET.

3

TO ACCOMPANY PLANS DATED 10-7-15

CONDUIT

NEW	EXISTING	
		LIGHTING CONDUIT, UNLESS OTHERWISE INDICATED OR NOTED
		TRAFFIC SIGNAL CONDUIT
C	c	COMMUNICATION CONDUIT
T	t	TELEPHONE CONDUIT
F	f	FIRE ALARM CONDUIT
FO	fo	FIBER OPTIC CONDUIT
		CONDUIT TERMINATION
R	r	CONDUIT RISER ATTACHED TO THE STRUCTURE OR SERVICE POLE

SERVICE EQUIPMENT

NEW	EXISTING	
OH	oh	OVERHEAD LINES
U	U	WOOD POLE, "U" INDICATES UTILITY OWNED
		POLE GUY WITH ANCHOR
		UTILITY TRANSFORMER - GROUND MOUNTED
III	III	SERVICE EQUIPMENT ENCLOSURE TYPE. DOOR INDICATES FRONT OF ENCLOSURE
T	t	TELEPHONE DEMARCATION CABINET

POLE-MOUNTED SERVICE DESIGNATION

TYPE H SERVICE, 28'-10" — TYPE OF INSTALLATION AND POLE HEIGHT ABOVE GRADE

FLASHING BEACON

NEW	EXISTING	
R	R	FLASHING BEACON (ONE VEHICLE SIGNAL HEAD WITH BACKPLATE AND VISOR) "R" INDICATES RED INDICATION, "Y" INDICATES YELLOW INDICATION
Y Y	Y Y	FLASHING BEACON WITH TYPE 15-FBS STANDARD AND A SIGN.
R R	R R	FLASHING BEACON WITH TYPES 9, 9A OR 9B SIGN UNLESS OTHERWISE SPECIFIED OR INDICATED

SIGNAL EQUIPMENT

NEW	EXISTING	
C	C	PEDESTRIAN SIGNAL HEAD "C" INDICATES COUNTDOWN PEDESTRIAN HEAD
		PUSH BUTTON ASSEMBLY POST
		PEDESTRIAN BARRICADE
		VEHICLE SIGNAL HEAD (WITH BACKPLATE AND 3-SECTIONS: RED, YELLOW AND GREEN)
		VEHICLE SIGNAL HEAD WITH ANGLE VISOR
PV	PV	MODIFICATIONS OF BASIC SYMBOL: "L" INDICATES ALL NON-ARROW SECTIONS LOUVERED "LG" INDICATES LOUVERED GREEN SECTION ONLY "PV" INDICATES ALL 12" SECTIONS PROGRAMMED VISIBILITY "8" INDICATES ALL 8" SECTIONS (ONLY WHEN SPECIFIED)
		VEHICLE SIGNAL HEAD CONSISTING OF RED, YELLOW AND GREEN LEFT ARROW SECTIONS
		VEHICLE SIGNAL HEAD CONSISTING OF RED AND YELLOW SECTIONS WITH AN UP GREEN ARROW SECTION
		VEHICLE SIGNAL HEAD (5 SECTION) CONSISTING OF RED, YELLOW AND GREEN SECTIONS WITH YELLOW AND GREEN RIGHT ARROW SECTIONS
		TYPE 15TS STANDARD WITH VEHICLE SIGNAL HEAD AND LUMINAIRE
		TYPE 21TS STANDARD WITH VEHICLE SIGNAL HEAD AND LUMINAIRE
		STANDARD WITH LUMINAIRE AND SIGNAL MAST ARMS AND ATTACHED VEHICLE SIGNAL HEADS
		TYPE 1 STANDARD WITH ATTACHED VEHICLE SIGNAL HEADS
		STANDARD WITH A SIGNAL MAST ARM, ATTACHED VEHICLE SIGNAL HEADS AND INTERNALLY ILLUMINATED STREET NAME SIGN
		CONTROLLER ASSEMBLY. DOOR INDICATES FRONT OF CABINET

SIGNAL EQUIPMENT Cont

NEW	EXISTING	
		GUARD POST
		TYPE 1 STANDARD WITH RAMP METERING SIGN
		OPTICAL DETECTOR FOR THE EMERGENCY VEHICLE DETECTION SYSTEM

NOTES:

1. All signal sections shall be 12" unless shown otherwise.
2. Signal heads shall be provided with backplates unless shown otherwise.

ILLUMINATED OVERHEAD SIGN

NEW	EXISTING	
		SINGLE POST, SINGLE ILLUMINATED SIGN, BALANCED BUTTERFLY
		SINGLE POST, DOUBLE ILLUMINATED SIGN, BALANCED BUTTERFLY
		SINGLE POST, SINGLE ILLUMINATED SIGN, FULL CANTILEVER
		DOUBLE POST, SINGLE ILLUMINATED SIGN
		SINGLE ILLUMINATED SIGN MOUNTED ON STRUCTURE
		DOUBLE POST, SINGLE ILLUMINATED SIGN WITH ELECTROLIER

STATE OF CALIFORNIA
DEPARTMENT OF TRANSPORTATION

ELECTRICAL SYSTEMS (LEGEND AND ABBREVIATIONS)

NO SCALE

RSP ES-1B DATED JULY 19, 2013 SUPERSEDES STANDARD PLAN ES-1B DATED MAY 20, 2011 - PAGE 426 OF THE STANDARD PLANS BOOK DATED 2010.

REVISED STANDARD PLAN RSP ES-1B

3 **ADDED PER ADDENDUM NO. 3 DATED SEPTEMBER 25, 2015**

2010 REVISED STANDARD PLAN RSP ES-1B

7-15-13

Dist	COUNTY	ROUTE	POST MILES TOTAL PROJECT	SHEET No.	TOTAL SHEETS
04	Ala	24,80,84 92,880,etc.	Var	101C	126

Theresa Gabriel
REGISTERED ELECTRICAL ENGINEER

July 19, 2013
PLANS APPROVAL DATE

REGISTERED PROFESSIONAL ENGINEER Theresa Aziz Gabriel No. E15129 Exp. 6-30-14 ELECTRICAL STATE OF CALIFORNIA

THE STATE OF CALIFORNIA OR ITS OFFICERS OR AGENTS SHALL NOT BE RESPONSIBLE FOR THE ACCURACY OR COMPLETENESS OF SCANNED COPIES OF THIS PLAN SHEET.

TO ACCOMPANY PLANS DATED 10-7-15

3

EQUIPMENT IDENTIFICATION

ILLUMINATED SIGN IDENTIFICATION NUMBER:

SIGN No. 12345
10 ISL SCI 1.0

- SIGN NUMBER - PLACE ON POST OR STRUCTURE
- TRANSFORMER RATING (kVA)
- LIGHTING CONTROL TYPE
- NUMBER AND TYPE OF FIXTURES

DO NOT PLACE ON STANDARD OR STRUCTURE

ELECTROLIER OR EQUIPMENT IDENTIFICATION NUMBER:

12345 - 15'-0"

- MAST ARM LENGTH, IF SHOWN. DO NOT PLACE ON STANDARD OR STRUCTURE
- EQUIPMENT NUMBER - PLACE ON STANDARD OR STRUCTURE. EXISTING EQUIPMENT NUMBERS ARE SHOWN IN PARENTHESIS

CONDUIT AND CONDUCTOR IDENTIFICATION:

1½"C, 2#10, 15#14, 2 DLC, 12P#18

- PAIR
- NUMBER AND SIZE OF CONDUCTORS AND CABLES
- SIZE OF CONDUIT IN INCHES

ø1, ø2, ø2P, etc.	TRAFFIC PHASE IDENTIFICATION FOR SIGNAL FACES, DETECTORS AND PHASE DIAGRAMS
1 2 3	LEGEND NUMBERS
A B C	EQUIPMENT, SIGNAL POLES, INSTALLATION OR ITEMS
1 2 3	CONDUIT RUN NUMBERS

SIGNAL AND LIGHTING STANDARD (TYPICAL DESIGNATION):

19A - 3 - 100

- WIND VELOCITY = 100 mph
- CASE 3 ARM LOADING
- STANDARD TYPE
- STANDARD PLAN SHEET NUMBER
- DETAIL, NUMBER, SECTION, TYPE OR ELEVATION

MISCELLANEOUS EQUIPMENT

NEW	EXISTING	
CMS	cms	CHANGEABLE MESSAGE SIGN
		CLOSED CIRCUIT TELEVISION CAMERA
		HIGHWAY ADVISORY RADIO POLE AND ANTENNA
EMS	ems	EXTINGUISHABLE MESSAGE SIGN
M V	m v	DETECTION DEVICE M = MICROWAVE SENSOR V = VIDEO IMAGE SENSOR

WIRING DIAGRAM LEGEND

----	EXTERNAL CONDUCTOR
	CONDUCTOR OR BUS
	TIE POINT
	CONTACTOR COIL
	CONTACTOR, NO CONTACT
	TERMINAL BLOCKS
	CONTACTOR, NC CONTACT
	ENCLOSURE BOND
	GROUNDING ELECTRODE
	CIRCUIT BREAKER
	RECEPTACLE

PULL BOXES

NEW	EXISTING	
		PULL BOX, No. 5 UNLESS OTHERWISE INDICATED OR NOTED
3	9A(21)	PULL BOX, ADDITIONAL DESIGNATIONS OR DESCRIPTIONS

3 No. 3½ PULL BOX
5 No. 5 PULL BOX
6 No. 6 PULL BOX
7 No. 7 (CEILING PULL BOX)
8 No. 8 (PENDANT SOFFIT PULL BOX)
9 No. 9 PULL BOX
9A No. 9A PULL BOX

(C) COMMUNICATIONS PULL BOX
(E) PULL BOX WITH EXTENSION
(S) SPRINKLER CONTROL PULL BOX
(21) ANCHOR BOLTS AND CONDUIT FOR FUTURE INSTALLATION OF TYPE 21 STANDARD
(T) TRAFFIC PULL BOX

VEHICLE DETECTORS

5 J 9 U

- VEHICLE DETECTOR DESIGNATION
- U = UPPER
  L = LOWER
- SLOT NUMBER IN INPUT FILE
- INPUT FILE (I OR J)
- PHASE

NEW	EXISTING	
		TYPE A DETECTOR LOOP. OUTLINE OF SAWCUT SHOWN
		TYPE B DETECTOR LOOP. OUTLINE OF SAWCUT SHOWN
		TYPE C DETECTOR LOOP. OUTLINE OF SAWCUT SHOWN
		TYPE D DETECTOR LOOP. OUTLINE OF SAWCUT SHOWN
		TYPE E DETECTOR LOOP. OUTLINE OF SAWCUT SHOWN
		TYPE Q DETECTOR LOOP. OUTLINE OF SAWCUT SHOWN
		MAGNETIC DETECTOR
DH	dh	DETECTOR HANDHOLE
		MICROWAVE OR VIDEO DETECTION ZONE

STATE OF CALIFORNIA
DEPARTMENT OF TRANSPORTATION

ELECTRICAL SYSTEMS (LEGEND AND ABBREVIATIONS)

NO SCALE

RSP ES-1C DATED JULY 19, 2013 SUPERSEDES STANDARD PLAN ES-1C DATED MAY 20, 2011 - PAGE 427 OF THE STANDARD PLANS BOOK DATED 2010.

REVISED STANDARD PLAN RSP ES-1C

2010 REVISED STANDARD PLAN RSP ES-1C

3 **ADDED PER ADDENDUM NO. 3 DATED SEPTEMBER 25, 2015**

7-11-13

DIST	COUNTY	ROUTE	POST MILES TOTAL PROJECT	SHEET NO.	TOTAL SHEETS
04	Ala	24,80,84 92,880,etc.	Var	101D	126

Theresa Gabriel
REGISTERED ELECTRICAL ENGINEER

July 19, 2013
PLANS APPROVAL DATE

REGISTERED PROFESSIONAL ENGINEER Theresa Aziz Gabriel No. E15129 Exp. 6-30-14 ELECTRICAL STATE OF CALIFORNIA

THE STATE OF CALIFORNIA OR ITS OFFICERS OR AGENTS SHALL NOT BE RESPONSIBLE FOR THE ACCURACY OR COMPLETENESS OF SCANNED COPIES OF THIS PLAN SHEET.

TO ACCOMPANY PLANS DATED 10-7-15

3

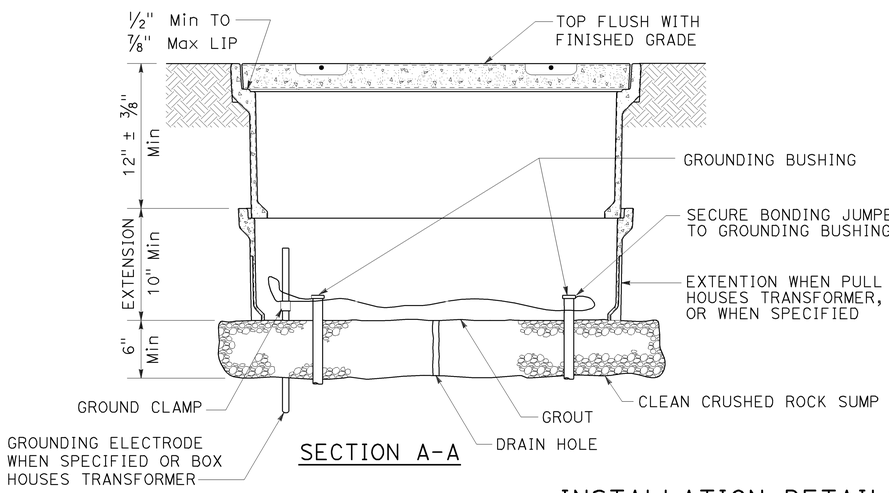

SECTION A-A

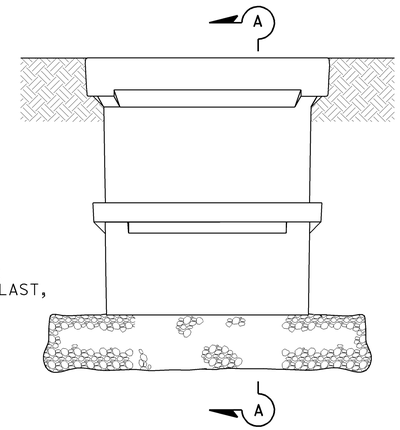

SIDE VIEW

INSTALLATION DETAILS

DETAIL A

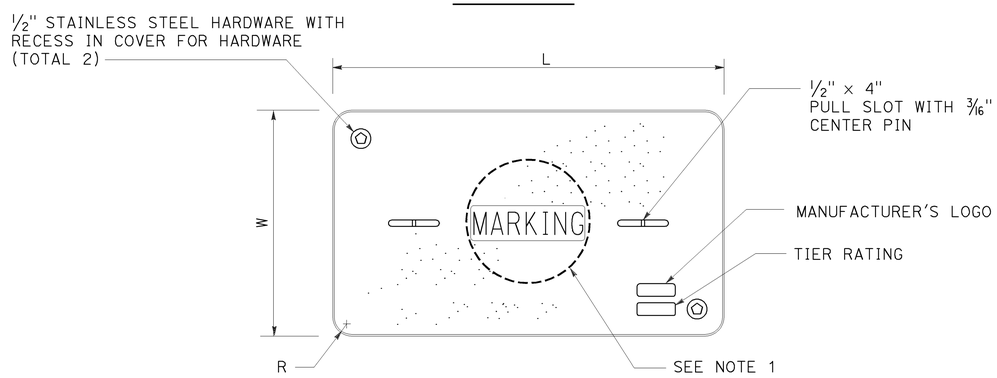

COVER TOP VIEW

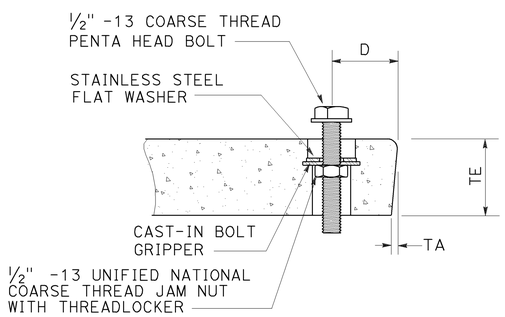

TYPICAL COVER CAPTIVE BOLT
OR SIMILAR

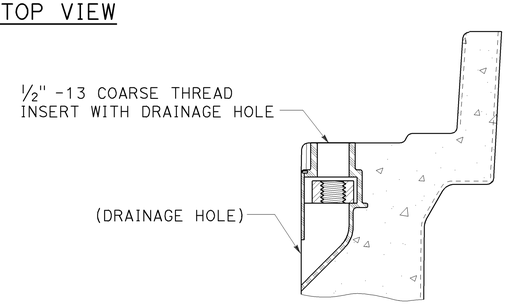

TYPICAL THREADED INSERT
OR SIMILAR

DIMENSION TABLE										
PULL BOX	PULL BOX			COVER						
	MINIMUM DEPTH BOX	MINIMUM DEPTH EXTENSION	MAXIMUM WEIGHT	L	W	R	TE	TA	D	MAXIMUM WEIGHT
No. 3½	12"	N/A	40 lb	1′ - 3⅜"	10⅛"	1⅜"	2"	⅛"	1¾"	30 lb
No. 5	12"	10"	55 lb	1′ - 11¼"	1′ - 1¾"	1⅜"	2"	⅛"	1¾"	60 lb
No. 6	12"	10"	70 lb	2′ - 6½"	1′ - 5½"	1⅜"	2"	⅛"	2"	85 lb

NOTES:

1. Pull box covers shall be marked as follows: "SERVICE" Service circuits between service point and service disconnect; "SPRINKLER-CONTROL" sprinkler control circuits, 50 V or less; "CALTRANS" on all pull boxes, except pull boxes marked "SPRINKLER-CONTROL"; and "TELEPHONE" Telephone service;

   A) No. 3½ pull box.
      1) "SIGNAL" - Traffic signal circuits with or without lighting or sign lighting circuits.
      2) "LIGHTING" - Lighting or sign lighting circuits where voltage is under 600 V.

   B) No. 5, 6, 9 or 9A pull box.
      1) "TRAFFIC SIGNAL" - Traffic signal circuits with or without lighting or sign lighting circuits.
      2) "LIGHTING" - Lighting or sign lighting circuits where voltage is under 600 V.
      3) "LIGHTING-HIGH VOLTAGE" - Lighting or sign lighting circuits where voltage is above 600 V.
      4) "IRRIGATION" - Circuits to irrigation controller 120 V or more.
      5) "RAMP METER" - Ramp meter circuits.
      6) "COUNT STATION" - Count or speed monitor circuits.
      7) "COMMUNICATIONS" - Communication circuits.
      8) "TOS COMMUNICATIONS" - TOS communication line.
      9) "TOS POWER" - TOS power.
      10) "TDC POWER" - Telephone demarcation cabinet power.
      11) "CCTV" - Closed circuit television circuits.
      12) "TMS" - Traffic monitoring station circuits.
      13) "CMS" - Changeable message sign circuits.
      14) "HAR" - Highway advisory radio circuits.
      15) "BOOSTER PUMP" - Booster pump circuit.

2. The nominal dimensions of the opening in which the cover sets shall be the same as the cover dimensions except the length and width dimensions shall be ⅛" greater.

3. Covers and boxes shall be interchangeable with California standard male and female gages. When interchanged with a standard male or female gage, the top surfaces shall be flush within ⅛". Top outside radius of covers and pull boxes shall have a ⅛" radius.

4. Pull box extension may be another pull box as long as the bottom edge of the pull box can fit into the cover opening.

5. All dimensions for the cover for non-traffic pull box are nominal values.

3 **ADDED PER ADDENDUM NO. 3 DATED SEPTEMBER 25, 2015**

STATE OF CALIFORNIA
DEPARTMENT OF TRANSPORTATION

ELECTRICAL SYSTEMS (NON-TRAFFIC PULL BOX)

NO SCALE

RSP ES-8A DATED JULY 19, 2013 SUPERSEDES RSP ES-8A DATED JANUARY 20, 2012 THAT SUPPLEMENTS THE STANDARD PLANS BOOK DATED 2010.

REVISED STANDARD PLAN RSP ES-8A

2010 REVISED STANDARD PLAN RSP ES-8A

7-15-13

DIST	COUNTY	ROUTE	POST MILES TOTAL PROJECT	SHEET NO.	TOTAL SHEETS
04	Ala	24,80,84 92,880,etc.	Var	101E	126

Theresa Gabriel
REGISTERED ELECTRICAL ENGINEER

July 19, 2013
PLANS APPROVAL DATE

REGISTERED PROFESSIONAL ENGINEER Theresa Aziz Gabriel No. E15129 Exp. 6-30-14 ELECTRICAL STATE OF CALIFORNIA

THE STATE OF CALIFORNIA OR ITS OFFICERS OR AGENTS SHALL NOT BE RESPONSIBLE FOR THE ACCURACY OR COMPLETENESS OF SCANNED COPIES OF THIS PLAN SHEET.

TO ACCOMPANY PLANS DATED 10-7-15

3

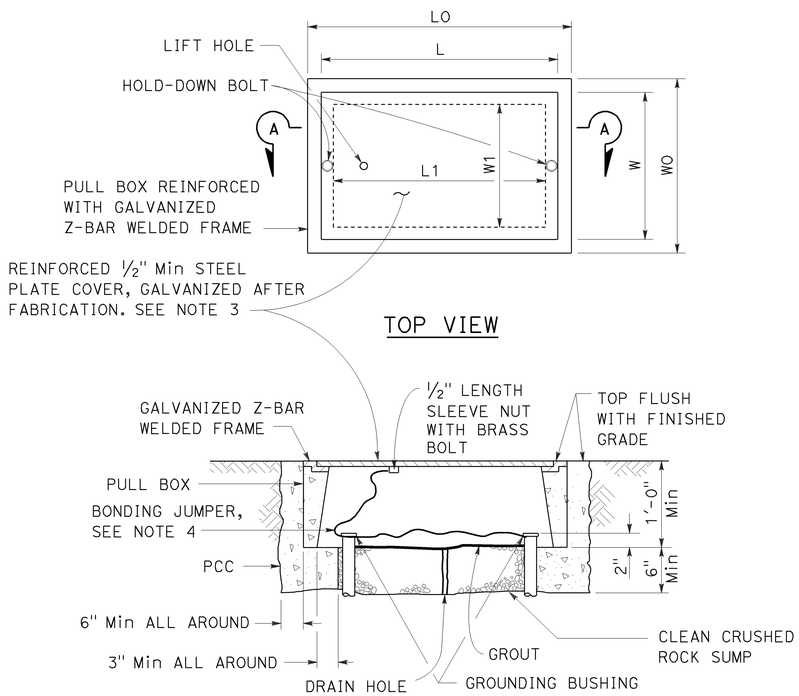

SECTION A-A

No. 3½(T), No. 5(T) AND No. 6(T) TRAFFIC PULL BOX

NOTES:

1. Traffic pull box shall be provided with steel cover and special concrete footing. Steel cover shall have embossed non-skid pattern.
2. Steel reinforcing shall be as regularly used in the standard products of the respective manufacturer.
3. Pull box covers shall be marked as follows: "SERVICE" Service circuits between service point and service disconnect; "SPRINKLER-CONTROL" Sprinkler control circuits, 50 V or less; "CALTRANS" On all pull boxes, except pull boxes marked "SPRINKLER-CONTROL"; and "TELEPHONE" Telephone service.
   - A) No. 3½(T) pull box.
     - 1) "SIGNAL" - Traffic signal circuits with or without lighting or sign lighting circuits.
     - 2) "LIGHTING" - Lighting or sign lighting circuits where voltage is under 600 V.
   - B) No. 5(T) or 6(T) pull box.
     - 1) "TRAFFIC SIGNAL" - Traffic signal circuits with or without lighting or sign lighting circuits.
     - 2) "LIGHTING" - Lighting or sign lighting circuits where voltage is under 600 V.
     - 3) "LIGHTING-HIGH VOLTAGE" - Lighting or sign lighting circuits where voltage is above 600 V.
     - 4) "IRRIGATION" - Circuits to irrigation controller 120 V or more.
     - 5) "RAMP METER" - Ramp meter circuits.
     - 6) "COUNT STATION" - Count or speed monitor circuits.
     - 7) "COMMUNICATION" - Communication circuits.
     - 8) "TOS COMMUNICATIONS" - TOS communications line.
     - 9) "TOS POWER" - TOS power.
     - 10) "TDC POWER" - Telephone demarcation cabinet power.
     - 11) "CCTV" - Closed circuit television circuits.
     - 12) "TMS" - Traffic monitoring station circuits.
     - 13) "CMS" - Changeable message sign circuits.
     - 14) "HAR" - Highway advisory radio circuits.
     - 15) "BOOSTER PUMP" - Booster pump circuit.
4. Bonding jumper for metal covers shall be 3' long, minimum.
5. The nominal dimensions of the opening in which the cover sets shall be the same as the cover dimensions except the length and width dimensions shall be ⅛" greater.
6. Covers and boxes shall be interchangeable with California standard male and female gages. When interchanged with a standard male or female gage, the top surfaces shall be flush within ⅛".

DIMENSION TABLE

PULL BOX	PULL BOX						COVER				
	MINIMUM * THICKNESS	MINIMUM DEPTH BOX AND EXTENSION	WO	LO	L1	W1	L **	W **	R	EDGE THICKNESS	EDGE TAPER
No. 3½(T)	1½"	1'-0"	1'-5"± 1"	1'-8⅞"±	1'-2½"±	10⅝"± 1"	1'-8"±	1'-1¾"±	0"	½"	NONE
No. 5(T)	1¾"	1'-0"	1'-11½"± 1"	2'-5½"±	1'-7"±	1'-1"± 1"	2'-3"±	1'-4"±	0"	½"	NONE
No. 6(T)	2"	1'-0"	2'-6"± 1"	2'-11½"±	1'-11½"±	1'-5"± 1"	2'-9"±	1'-8"±	0"	½"	NONE

* EXCLUDING CONDUIT WEB ** TOP DIMENSION

3 **ADDED PER ADDENDUM NO. 3 DATED SEPTEMBER 25, 2015**

STATE OF CALIFORNIA
DEPARTMENT OF TRANSPORTATION

ELECTRICAL SYSTEMS (TRAFFIC PULL BOX)

NO SCALE

RSP ES-8B DATED JULY 19, 2013 SUPERSEDES RSP ES-8B DATED JANUARY 20, 2012 THAT SUPPLEMENTS THE STANDARD PLANS BOOK DATED 2010.

REVISED STANDARD PLAN RSP ES-8B

2010 REVISED STANDARD PLAN RSP ES-8B

7-15-13

DIST	COUNTY	ROUTE	POST MILES TOTAL PROJECT	SHEET No.	TOTAL SHEETS
04	Ala	24,80,84, 92,880,etc.	Var	107	126

REGISTERED CIVIL ENGINEER 1-30-15 DATE

4-27-15
PLANS APPROVAL DATE

REGISTERED PROFESSIONAL ENGINEER JOEL MAGANA No. C61500 Exp. 6/30/17 CIVIL STATE OF CALIFORNIA

The State of California or its officers or agents shall not be responsible for the accuracy or completeness of scanned copies of this plan sheet.

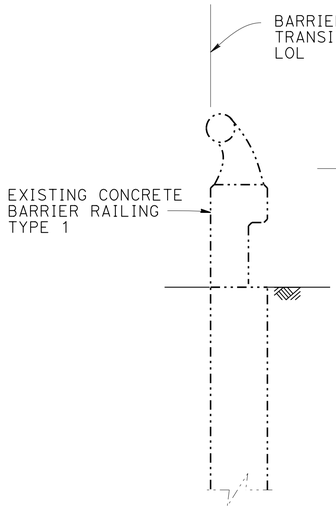

SECTION A-A
NO SCALE

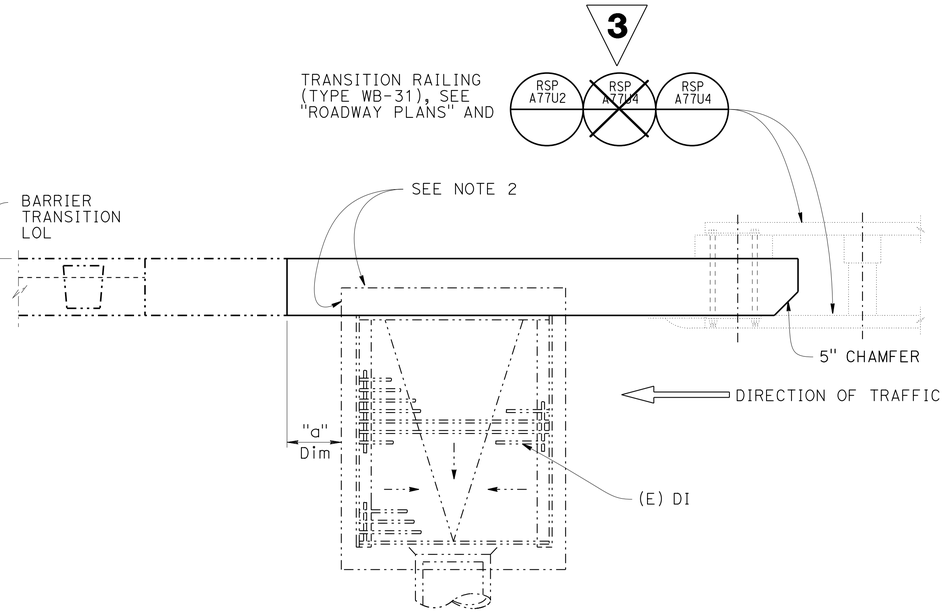

PLAN
NO SCALE

NOTES:

1. See "Location Table" sheets and "Roadway Plans" for work locations.
2. Apply ⅜" thick expansion board to all sides of DI in contact with newly formed Concrete Barrier Transition.
3. Holes used for fastening existing MBGR must be mortar filled, unless holes were cast using pipe sleeves.
4. Existing barrier heights vary. Where existing barrier height is more than 2'-8", transition barrier height to 2'-8" @ 4:1 slope.
5. Elevation detail shows new structure along the DI offset (dimension "a") placed below FG in a trench. Referring to the Drainage Inlet (DI) Table, for a < 1' then c = 6", simarily for 1' < a < 2' then c = 1', otherwise c = 2'-0".

DRAINAGE INLET (DI) TABLE

BRIDGE No. OR ERS No.	ROUTE	POST MILE	DI OFFSET dimension "a" See Note 5	DI SIZE dimension "b" See Note 5	TRANSITION LENGTH, "L" a + b + 4' = L
33-0305F	24	2.2	1'-8"±	3'-5"±	9'-1"
33-0359L	24	2.2	1'-5"±	3'-5"±	8'-10"
NOT A BRIDGE	24	3.27	1'-0"±	3'-5"±	8'-5"

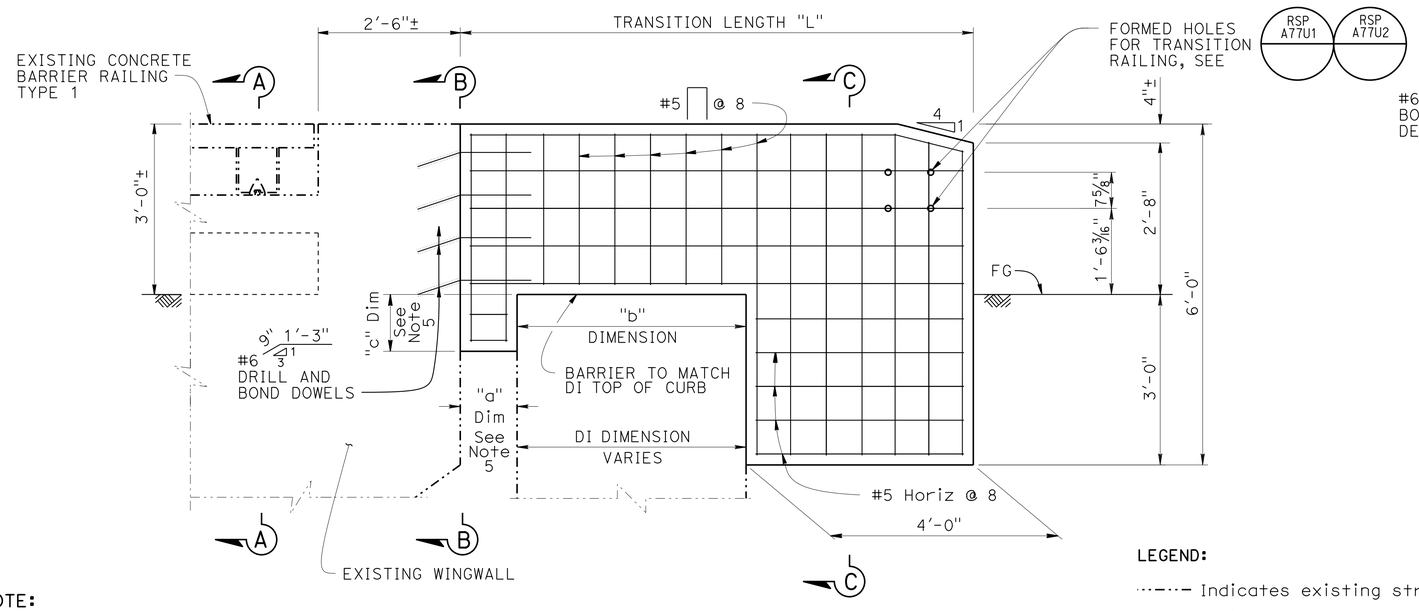

ELEVATION
NO SCALE

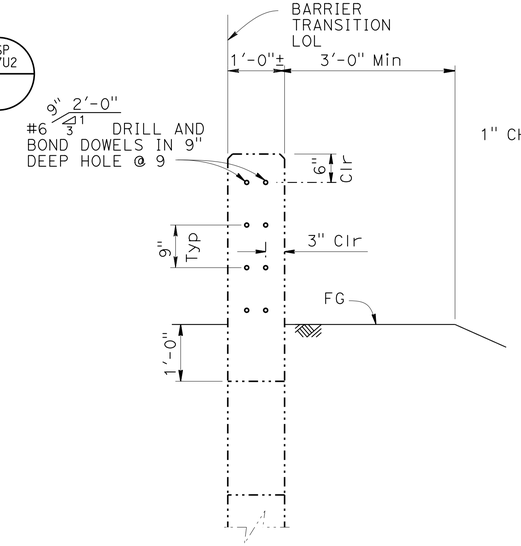

SECTION B-B
NO SCALE

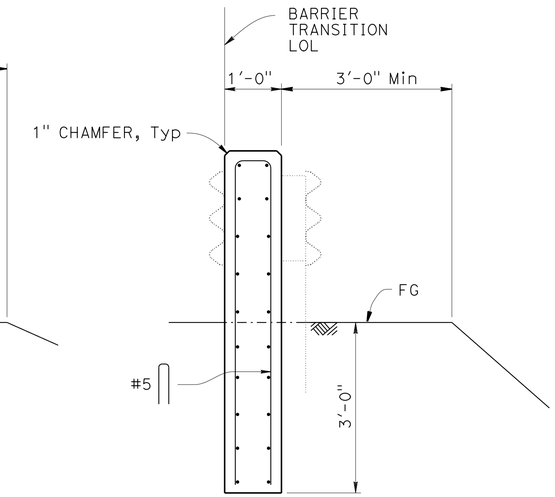

SECTION C-C
NO SCALE

NOTE:
THE CONTRACTOR MUST VERIFY ALL CONTROLLING FIELD DIMENSIONS BEFORE ORDERING OR FABRICATING ANY MATERIAL.

LEGEND:
- Indicates existing structure
- Indicates new structure

3 **REPLACED PER ADDENDUM No. 3 DATED SEPTEMBER 25, 2015**

DESIGN	BY JOEL MAGANA	CHECKED VICTOR LOPEZ
DETAILS	BY B EDWARDS	CHECKED JOEL MAGANA
QUANTITIES	BY JOEL MAGANA	CHECKED VICTOR LOPEZ

BRANCH CHIEF DAVID NEUMANN

STATE OF CALIFORNIA
DEPARTMENT OF TRANSPORTATION

DIVISION OF ENGINEERING SERVICES
DESIGN AND TECHNICAL SERVICES
SPECIAL DESIGNS BRANCH B

BRIDGE NO. VARIES
POST MILE VARIES

CONCRETE BARRIER TRANSITIONS
CONCRETE BARRIER TYPE 1 OVER DI - CASE 3

(ENGLISH) SPECIAL DESIGNS BRANCH BORDER SHEET (REV. 7-1-09)

ORIGINAL SCALE IN INCHES FOR REDUCED PLANS 0 1 2 3

UNIT: 3619
PROJECT NUMBER & PHASE: 04140000051 CONTRACT NO.: 04-2G5014

DISREGARD PRINTS BEARING EARLIER REVISION DATES

REVISION DATES 6-15-14 7/1/15 7/7/14 1-15-15

SHEET 6 OF 25

FILE => 04-2g5014-uh-misc-dt04.add

USERNAME => s129144 DATE PLOTTED => 24-SEP-2015 TIME PLOTTED => 15:16