Dist	COUNTY	ROUTE	KILOMETER POST TOTAL PROJECT	SHEET No.	TOTAL SHEETS
04	SF	80	12.7/13.2	18	806

REGISTERED CIVIL ENGINEER 3-05-08 DATE

6-23-08
PLANS APPROVAL DATE

REGISTERED PROFESSIONAL ENGINEER T.T. Lai No. 63630 Exp. 9-30-10 CIVIL STATE OF CALIFORNIA

THE STATE OF CALIFORNIA OR ITS OFFICERS OR AGENTS SHALL NOT BE RESPONSIBLE FOR THE ACCURACY OR COMPLETENESS OF ELECTRONIC COPIES OF THIS PLAN SHEET.

Caltrans Metric

5

LEGEND: (THIS SHEET ONLY)

- CONTRACT No. 04-0120S4
- CONTRACT No. 04-0120R4
- CONTRACT No. 04-0120F4
- CONTRACT OVERLAP PR
- CONTRACT OVERLAP FP
- CONTRACT OVERLAP PRA

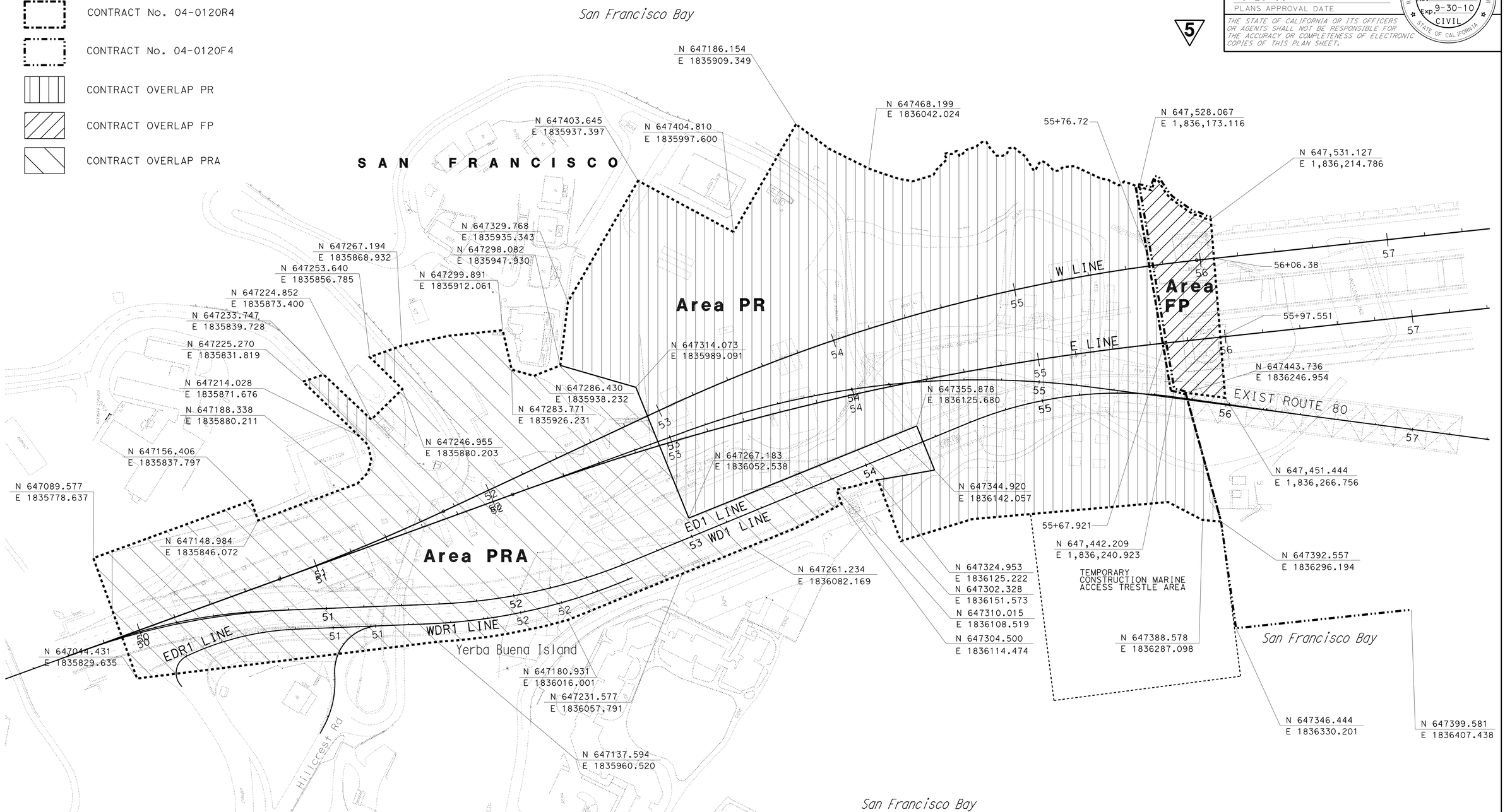

5 **REVISED PER ADDENDUM No. 5 DATED JULY 30, 2009**

CONSTRUCTION DETAILS
AREAS FOR CONTRACTOR USE

SCALE: 1:1000

C-6

TRINH LAI	TL	REVISED BY	
BOB ZANDIPOUR	10/07	DATE REVISED	
CALCULATED-DESIGNED BY			
CHECKED BY			
FUNCTIONAL SUPERVISOR	BOB ZANDIPOUR		

STATE OF CALIFORNIA - DEPARTMENT OF TRANSPORTATION
Caltrans **DESIGN**

LAST REVISION 05-20-08 | DATE PLOTTED => 28-JUL-2009 | TIME PLOTTED => 06:15

Dist	COUNTY	ROUTE	KILOMETER POST TOTAL PROJECT	SHEET No.	TOTAL SHEETS
04	SF	80	12.7/13.2	47	806

REGISTERED CIVIL ENGINEER 3-05-08 DATE

6-23-08
PLANS APPROVAL DATE

REGISTERED PROFESSIONAL ENGINEER T.T. Lai No. 63630 Exp. 9-30-10 CIVIL STATE OF CALIFORNIA

THE STATE OF CALIFORNIA OR ITS OFFICERS OR AGENTS SHALL NOT BE RESPONSIBLE FOR THE ACCURACY OR COMPLETENESS OF ELECTRONIC COPIES OF THIS PLAN SHEET.

Caltrans Metric

5

FOR COMPLETE RIGHT OF WAY AND ACCURATE ACCESS DATA, SEE RIGHT OF WAY RECORD MAPS AT DISTRICT OFFICE.

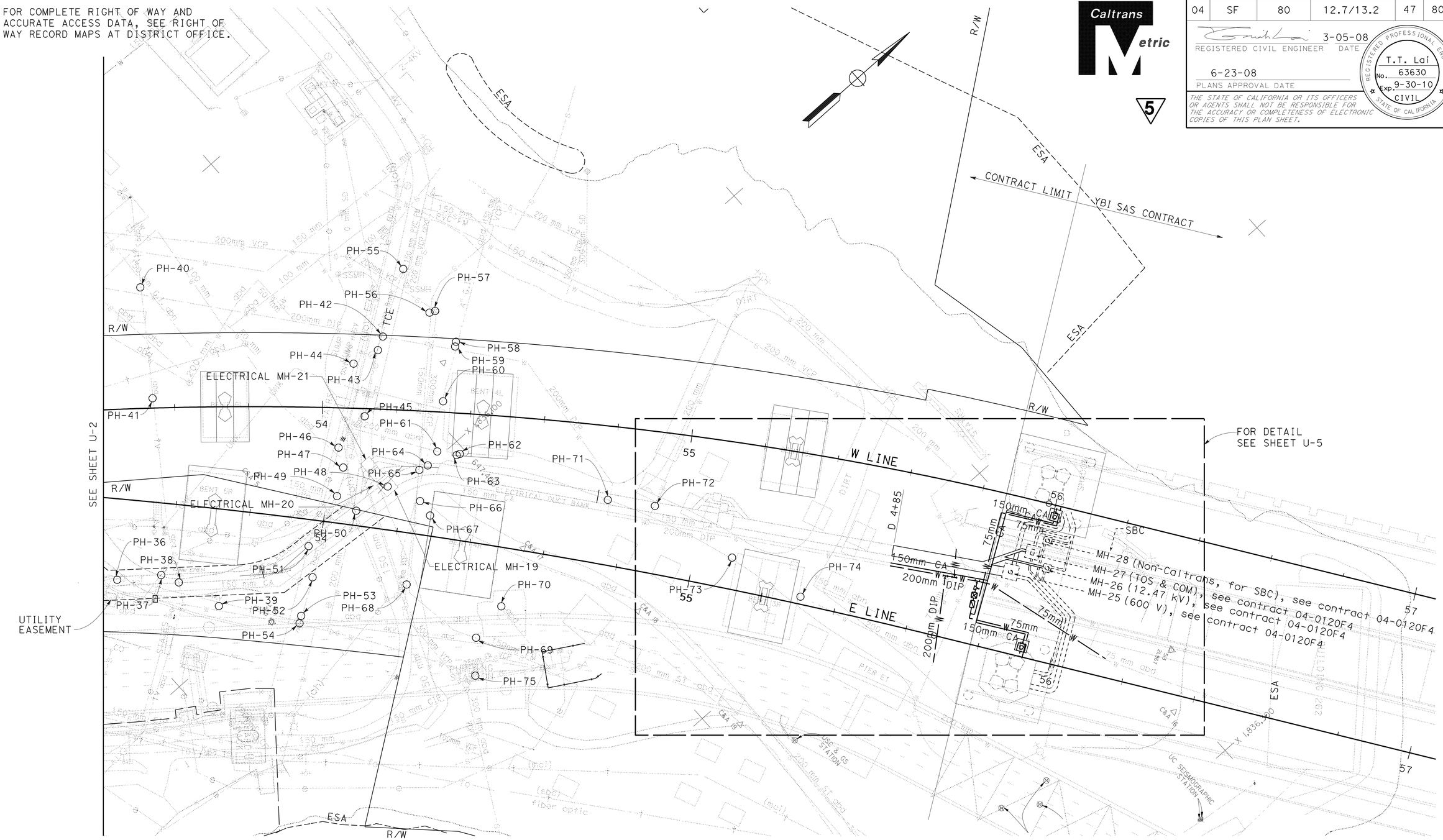

5 **REVISED PER ADDENDUM No. 5 DATED JULY 30, 2009**

ALL DIMENSIONS ARE IN METERS UNLESS OTHERWISE SHOWN

UTILITY PLAN

SCALE: 1:500

THIS PLAN ACCURATE FOR UTILITY WORK ONLY

FOR NOTES, ABBREVIATIONS &/OR LEGEND, SEE SHEET U-1

U-3

CALCULATED-DESIGNED BY	TRINH LAI	REVISED BY	TL
CHECKED BY	BOB ZANDIPOUR	DATE REVISED	10/07
FUNCTIONAL SUPERVISOR	BOB ZANDIPOUR		

STATE OF CALIFORNIA - DEPARTMENT OF TRANSPORTATION

Caltrans **DESIGN**

LAST REVISION 03-17-08 | DATE PLOTTED => 28-JUL-2009 | TIME PLOTTED => 06:15

Dist	COUNTY	ROUTE	KILOMETER POST TOTAL PROJECT	SHEET No.	TOTAL SHEETS
04	SF	80	12.7/13.2	120	806

2/14/08
REGISTERED ELECTRICAL ENGINEER

6-23-08
PLANS APPROVAL DATE

REGISTERED PROFESSIONAL ENGINEER
FADI WALIEDDINE
No. 11465
Exp. 12/31/09
ELECTRICAL
STATE OF CALIFORNIA

THE STATE OF CALIFORNIA OR ITS OFFICERS OR AGENTS SHALL NOT BE RESPONSIBLE FOR THE ACCURACY OR COMPLETENESS OF ELECTRONIC COPIES OF THIS PLAN SHEET.

PB AMERICAS, Inc.
A Parsons Brinckerhoff Company
303 Second St., Suite 700N
San Francisco, CA 94107-1317

Caltrans Metric

DRAWING TITLE	DRAWING No.
ELECTRICAL SHEET INDEX NO. 1	E-1
ELECTRICAL SHEET INDEX NO. 2	E-2
ELECTRICAL SYMBOLS	E-3
ELECTRICAL SYMBOLS AND ABBREVIATIONS	E-4
ELECTRICAL NOTES AND ABBREVIATIONS	E-5
ELECTRICAL KEY MAP	E-6
UNDERGROUND (ELECTRICAL DUCT BANK) (DUCT BANKS AND MANHOLES)	E-7, E-8, E-9, E-10, E-11
DETAILS UNDERGROUND YBI SUBSTATION EQUIPMENT ARRANGEMENT	E-12
DETAILS UNDERGROUND YBI SUBSTATION CONDUIT AND CABLE TRAY	E-13
DETAILS UNDERGROUND (ELECTRICAL DUCT BANK) (MANHOLE PLANS AND SECTIONS)	E-14, E-15, E-16, E-17, E-18, E-19, E-20, E-21, E-22, E-23, E-24, E-25, E-26, E-27, E-28, E-29
DETAILS UNDERGROUND SUBSTATION CONDUIT STUB-UPS	E-30
DETAILS UNDERGROUND (ELECTRICAL DUCT BANK) (DUCT BANK SECTIONS)	E-31, E-32, E-33, E-34
DETAILS UNDERGROUND (ELECTRICAL DUCT BANK) (TYPICAL MANHOLE AND DUCT BANK)	E-35
DETAILS UNDERGROUND (ELECTRICAL DUCT BANK) GROUNDING INTERFACE	E-36
DETAILS UNDERGROUND FOUNDATION GROUNDING	E-37
DETAILS UNDERGROUND (12.47 kV INTERFACE PLAN AND CABLE BLOCK DIAGRAM)	E-38
DETAILS UNDERGROUND 12.47 kV SINGLE LINE DIAGRAM	E-39
DETAILS UNDERGROUND (ELECTRICAL DUCT BANK) (480 V LVCC-A SINGLE LINE DIAGRAM)	E-40, E-41, E-42
DETAILS UNDERGROUND (ELECTRICAL DUCT BANK) (480 V LVCC-B SINGLE LINE DIAGRAM)	E-43, E-44, E-45
DETAILS UNDERGROUND (ELECTRICAL DUCT BANK) (YBI SUBSTATION SECTIONS)	E-46, E-47
YBI TRANSITION STRUCTURES ROADWAY WESTBOUND (LIGHTING AND ELECTRICAL SYSTEMS)	E-48, E-49, E-50, E-51, E-52
DETAILS YBI TRANSITION STRUCTURES ROADWAY WESTBOUND (480 V ROADWAY LIGHTING WIRING DIAGRAM)	E-53, E-54, E-55, E-56, E-57
DETAILS YBI TRANSITION STRUCTURES ROADWAY WESTBOUND (CONDUIT LOCATIONS)	E-58, E-59, E-60, E-61
DETAILS YBI TRANSITION STRUCTURES ROADWAY WESTBOUND (SECTIONS)	E-62, E-63

DRAWING TITLE	DRAWING No.
DETAILS YBI TRANSITION STRUCTURES ROADWAY WESTBOUND (PLATFORM 1W ARRANGEMENT AND PLAN)	E-64
DETAILS YBI TRANSITION STRUCTURES ROADWAY WESTBOUND (PLATFORM 2W ARRANGEMENT AND PLAN)	E-65
DETAILS YBI TRANSITION STRUCTURES ROADWAY WESTBOUND (PLATFORM 3W ARRANGEMENT AND PLAN)	E-66
DETAILS YBI TRANSITION STRUCTURES ROADWAY WESTBOUND (TYPICAL PLATFORM SECTIONS)	E-67
DETAILS YBI TRANSITION STRUCTURES ROADWAY WESTBOUND (LIGHT POLE AND FIXTURE SCHEDULE)	E-68
DETAILS YBI TRANSITION STRUCTURES ROADWAY WESTBOUND (PULL BOX SCHEDULES)	E-69
DETAILS YBI TRANSITION STRUCTURES ROADWAY WESTBOUND (PANEL UP-101 AND UP-102 SCHEDULES)	E-70
DETAILS YBI TRANSITION STRUCTURES ROADWAY WESTBOUND (PANEL UP-103 SCHEDULE)	E-71
DETAILS YBI TRANSITION STRUCTURES ROADWAY WESTBOUND (PANEL UP-109 SCHEDULE)	E-72
YBI TRANSITION STRUCTURES GIRDER WESTBOUND (LIGHTING AND ELECTRICAL SYSTEMS)	E-73, E-74, E-75, E-76
DETAILS YBI TRANSITION STRUCTURES GIRDER WESTBOUND (480 V LIGHT PIPE WIRING DIAGRAM)	E-77
5 DETAILS YBI STRUCTURE GIRDER WESTBOUND 480 V LIGHT PIPE WIRING DIAGRAM	E-77A
DETAILS YBI TRANSITION STRUCTURES GIRDER WESTBOUND (BENT W8L ELEVATION AND SECTIONS)	E-78
DETAILS YBI TRANSITION STRUCTURES GIRDER WESTBOUND (GROUNDING PLAN)	E-79
DETAILS YBI TRANSITION STRUCTURES GIRDER WESTBOUND (TYPICAL GROUNDING INSTALLATION)	E-80
DETAILS YBI TRANSITION STRUCTURES GIRDER WESTBOUND (VAULT SECTIONS AND DETAILS)	E-81, E-82, E-83
DETAILS YBI TRANSITION STRUCTURES GIRDER WESTBOUND (LIGHT PIPE SCHEDULE)	E-84
DETAILS YBI TRANSITION STRUCTURES GIRDER WESTBOUND (HINGE W7LA)	E-85
DETAILS YBI TRANSITION STRUCTURES GIRDER WESTBOUND (CONDUIT SUPPORT AND EMBEDDED CONCRETE INSERT CHANNEL)	E-86, E-87, E-88, E-89
YBI TRANSITION STRUCTURES ROADWAY EASTBOUND (LIGHTING AND ELECTRICAL SYSTEMS)	E-90, E-91, E-92, E-93
DETAILS YBI TRANSITION STRUCTURES ROADWAY EASTBOUND (480 V ROADWAY LIGHTING WIRING DIAGRAM)	E-94, E-95
DETAILS YBI TRANSITION STRUCTURES ROADWAY EASTBOUND (120 V BIKE PATH LIGHTING WIRING DIAGRAM)	E-96, E-97
DETAILS YBI TRANSITION STRUCTURES ROADWAY EASTBOUND (CONDUIT LOCATIONS)	E-98, E-99, E-100, E-101

DRAWING TITLE	DRAWING NO.
DETAILS YBI TRANSITION STRUCTURES ROADWAY EASTBOUND (YBI STRUCTURE SECTIONS)	E-102
DETAILS YBI TRANSITION STRUCTURES ROADWAY EASTBOUND (TYPICAL BIKE PATH PLAN AND ELEVATION)	E-103
5 DETAILS YBI TRANSITION STRUCTURES ROADWAY EASTBOUND (TYPICAL BIKE PATH SECTION DETAILS)	E-103A
DETAILS YBI TRANSITION STRUCTURES ROADWAY EASTBOUND (TYPICAL BIKE PATH PLAN AND SECTIONS)	E-104
DETAILS YBI TRANSITION STRUCTURES ROADWAY EASTBOUND (PLATFORM 1E ARRANGEMENT AND PLAN)	E-105
DETAILS YBI TRANSITION STRUCTURES ROADWAY EASTBOUND (PLATFORM 2E ARRANGEMENT AND PLAN)	E-106
DETAILS YBI TRANSITION STRUCTURES ROADWAY EASTBOUND (PLATFORM 3E ARRANGEMENT AND PLAN)	E-107
DETAILS YBI TRANSITION STRUCTURES ROADWAY EASTBOUND (TYPICAL PLATFORM SECTIONS)	E-108
DETAILS YBI TRANSITION STRUCTURES ROADWAY EASTBOUND (PULL BOX SCHEDULES)	E-109
DETAILS YBI TRANSITION STRUCTURES ROADWAY EASTBOUND (LIGHT POLE AND FIXTURE SCHEDULES)	E-110
DETAILS YBI TRANSITION STRUCTURES ROADWAY EASTBOUND (PANEL UP-201 AND UP-202 SCHEDULES)	E-111
DETAILS YBI TRANSITION STRUCTURES ROADWAY EASTBOUND (PANEL UP-203 SCHEDULE)	E-112
DETAILS YBI TRANSITION STRUCTURES ROADWAY EASTBOUND (PANEL UP-209 SCHEDULE)	E-113
DETAILS YBI TRANSITION STRUCTURES ROADWAY EASTBOUND (PANEL LP-216 SCHEDULE)	E-114
DETAILS YBI TRANSITION STRUCTURES ROADWAY EASTBOUND (PANEL LP-217 SCHEDULE)	E-115
DETAILS YBI TRANSITION STRUCTURES ROADWAY EASTBOUND (PANEL LP-218 SCHEDULE)	E-116
YBI TRANSITION STRUCTURES GIRDER EASTBOUND (LIGHTING AND ELECTRICAL SYSTEMS)	E-117, E-118, E-119, E-120
DETAILS YBI TRANSITION STRUCTURES GIRDER EASTBOUND (CONDUIT SUPPORT AND EMBEDDED CONCRETE INSERT CHANNEL)	E-121, E-122, E-123
DETAILS YBI TRANSITION STRUCTURES GIRDER EASTBOUND (TYPICAL INSTALLATION AND SECTIONS)	E-124

5 REVISED PER ADDENDUM No. 5 DATED JULY 30, 2009

ELECTRICAL SHEET INDEX NO. 1

E-1

STATE OF CALIFORNIA - DEPARTMENT OF TRANSPORTATION
Caltrans

CONSULTANT FUNCTIONAL SUPERVISOR: BEHZAD GOLEMOHAMMADI
CALCULATED-DESIGNED BY: AB
CHECKED BY: IAH
REVISED BY
DATE REVISED

LAST REVISION 00-00-00
DATE PLOTTED => 28-JUL-2009
TIME PLOTTED => 06:15

Dist	COUNTY	ROUTE	KILOMETER POST TOTAL PROJECT	SHEET No.	TOTAL SHEETS
04	SF	80	12.7/13.2	121	806

REGISTERED ELECTRICAL ENGINEER 2/14/08

6-23-08
PLANS APPROVAL DATE

REGISTERED PROFESSIONAL ENGINEER FADI WALIEDDINE No. 11465 Exp. 12/31/09 ELECTRICAL STATE OF CALIFORNIA

THE STATE OF CALIFORNIA OR ITS OFFICERS OR AGENTS SHALL NOT BE RESPONSIBLE FOR THE ACCURACY OR COMPLETENESS OF ELECTRONIC COPIES OF THIS PLAN SHEET.

PB AMERICAS, Inc.
A Parsons Brinckerhoff Company
303 Second St., Suite 700N
San Francisco, CA 94107-1317

Caltrans Metric

5

DRAWING TITLE	DRAWING No.
DETAILS YBI TRANSITION STRUCTURES GIRDER EASTBOUND (480 V LIGHT PIPE WIRING DIAGRAM)	E-125
DETAILS YBI STRUCTURE GIRDER EASTBOUND 480 V LIGHT PIPE WIRING DIAGRAM	E-125A
DETAILS YBI TRANSITION STRUCTURES GIRDER EASTBOUND (HINGE W6RB)	E-126
DETAILS YBI TRANSITON STRUCTURES GIRDER EASTBOUND (BENT W8R ELEVATION AND SECTIONS)	E-127
DETAILS YBI TRANSITION STRUCTURES GIRDER EASTBOUND (GROUNDING PLAN)	E-128
DETAILS YBI TRANSITION STRUCTURES GIRDER EASTBOUND (TYPICAL GROUNDING INSTALLATION)	E-129
DETAILS YBI TRANSITION STRUCTURES GIRDER EASTBOUND (VAULT SECTIONS AND DETAILS)	E-130, E-131, E-132, E-133
YBI TRANSITION STRUCTURES GIRDER EASTBOUND (LIGHT PIPE SCHEDULE)	E-134
DETAILS SCADA REMOTE TERMINAL UNIT SYSTEM (LOCATIONS)	E-135
DETAILS SCADA REMOTE TERMINAL UNIT SYSTEM (SCADA INTERFACE PLAN AND CABLE BLOCK DIAGRAM)	E-136
DETAILS SCADA REMOTE TERMINAL UNIT SYSTEM (TELEPHONE INTERFACE PLAN AND CABLE BLOCK DIAGRAM)	E-137
DETAILS SCADA REMOTE TERMINAL UNIT SYSTEM (SCADA AND TELEPHONE CABLE BLOCK DIAGRAM)	E-138
DETAILS SCADA REMOTE TERMINAL UNIT SYSTEM (RTU-9W AND RTU-9E PANEL LAYOUT)	E-139
DETAILS SCADA REMOTE TERMINAL UNIT SYSTEM (SCADA COMMUNICATION TERMINAL BOX LAYOUT)	E-140
DETAILS SCADA REMOTE TERMINAL UNIT SYSTEM (RTU-9W ELEMENTARY AND CONNECTION DIAGRAM)	E-141
DETAILS SCADA REMOTE TERMINAL UNIT SYSTEM (RTU-9E ELEMENTARY AND CONNECTION DIAGRAM)	E-142
DETAILS SCADA REMOTE TERMINAL UNIT SYSTEM (COM-1W TERMINAL BOX WIRING DIAGRAM)	E-143
DETAILS SCADA REMOTE TERMINAL UNIT SYSTEM (TEL-1W TERMINAL BOX WIRING DIAGRAM)	E-144
DETAILS SCADA REMOTE TERMINAL UNIT SYSTEM (TYPICAL RELAY WIRING DIAGRAM)	E-145
TRAFFIC OPERATIONS SYSTEM (FIELD ELEMENT LOCATIONS)	E-146
DETAILS TRAFFIC OPERATIONS SYSTEM (PREFORMED LOOP DETECTOR STATION INSTALLATION)	E-147
DETAILS TRAFFIC OPERATIONS SYSTEM (CLOSED CIRCUIT TELEVISION CAMERA STATION INSTALLATION)	E-148
DETAILS TRAFFIC OPERATIONS SYSTEM (CLOSED CIRCUIT TELEVISION CAMERA EQUIPMENT AND JUNCTION BOX WIRING DIAGRAM)	E-149

DRAWING TITLE	DRAWING No.
DETAILS TRAFFIC OPERATIONS SYSTEM (CLOSED CIRCUIT TELEVISION CAMERA CONTROLLER CABINET WIRING DIAGRAM)	E-150
DETAILS TRAFFIC OPERATIONS SYSTEM (CHANGEABLE MESSAGE SIGN STATION INSTALLATION)	E-151
DETAILS TRAFFIC OPERATIONS SYSTEM (CONTROLLER CABINET CONFIGURATION)	E-152
DETAILS TRAFFIC OPERATIONS SYSTEM (COMMUNICATION CABLE BLOCK DIAGRAM)	E-153
DETAILS TRAFFIC OPERATIONS SYSTEM (FIBER OPTIC TERMINATIONS WESTBOUND)	E-154
DETAILS TRAFFIC OPERATIONS SYSTEM (FIBER OPTIC TERMINATIONS EASTBOUND)	E-155
DETAILS TRAFFIC OPERATIONS SYSTEM (FIBER OPTIC SPLICE)	E-156, E-157
STRONG MOTION DETECTION SYSTEM (GENERAL PLAN AND ELEVATION)	E-158
STRONG MOTION DETECTION SYSTEM YBI TRANSITION STRUCTURES (BENT W7 CONDUIT AND SENSOR LOCATION)	E-159
STRONG MOTION DETECTION SYSTEM YBI TRANSITION STRUCTURES (BENT W4 CONDUIT AND SENSOR LOCATION)	E-160
STRONG MOTION DETECTION SYSTEM YBI TRANSITION STRUCTURES (WB AND EB HINGE K CONDUIT AND SENSOR LOCATION)	E-161
STRONG MOTION DETECTION SYSTEM YBI-TRANSITION STRUCTURES (BENT W7 CONDUIT AND SENSOR LOCATION)	E-162
DETAILS STRONG MOTION DETECTION SYSTEM (SENSOR AND RECORDER ENCLOSURES)	E-163
STRONG MOTION DETECTION SYSTEM (RECORDER SCHEDULE)	E-164
STRONG MOTION DETECTION SYSTEM (SENSOR SCHEDULE)	E-165
DETAILS STRONG MOTION DETECTION SYSTEM (CABLE BLOCK DIAGRAM)	E-166, E-167
CALL BOX SYSTEM (YBI STRUCTURE ROADWAY WESTBOUND LOCATIONS)	E-168
CALL BOX SYSTEM (YBI STRUCTURE ROADWAY EASTBOUND LOCATIONS)	E-169
CALL BOX SYSTEM (CALL BOX WIRING DIAGRAM)	E-170, E-171
CALL BOX SYSTEM (CALL BOX SCHEDULES)	E-172
MISCELLANEOUS DETAILS AT CALL BOX LOCATIONS	E-172A
DETAILS LIGHT POLE AND FIXTURE	E-173
DETAILS ROADWAY LIGHTING POLE ANCHORAGE	E-174
DETAILS VIADUCT LIGHT POLE FOUNDATIONS	E-174A
DETAILS YBI TRANSITION STRUCTURES ROADWAY EASTBOUND (TYPICAL BIKE PATH LIGHTING)	E-175

DRAWING TITLE	DRAWING No.
DETAILS YBI TRANSITION STRUCTURES GIRDER (TYPICAL LIGHT PIPE INSTALLATION 1)	E-176
DETAILS YBI TRANSITION STRUCTURES GIRDER (TYPICAL LIGHT PIPE INSTALLATION 2)	E-177
DETAILS YBI TRANSITION STRUCTURES GIRDER (TYPICAL LIGHT PIPE INSTALLATION 3)	E-178
LIGHTING (LOCATION 1)	E-179
DETAILS LIGHTING (LOCATION 1)	E-180
DETAILS LIGHTING (LOCATION 1) (CITY OF SAN FRANCISCO TYPICAL STREET LIGHT)	E-181
CONDUIT AND TRAY SCHEDULE UNDERGROUND	E-182 THRU E-244
CONDUIT AND TRAY SCHEDULE UNDERGROUND	E-244A THRU E-244K
CONDUIT AND TRAY SCHEDULE YBI TRANSITION STRUCTURES ROADWAY WB	E-245 THRU E-284
CONDUIT AND TRAY SCHEDULE YBI TRANSITION STRUCTURES ROADWAY WB	E-284A THRU E-284F
CONDUIT AND TRAY SCHEDULE YBI TRANSITION STRUCTURES GIRDER WB	E-285 THRU E-294
CONDUIT AND TRAY SCHEDULE YBI TRANSITION STRUCTURES GIRDER WB	E-294A THRU E-294B
CONDUIT AND TRAY SCHEDULE YBI TRANSITION STRUCTURES ROADWAY EB	E-295 THRU E-328
CONDUIT AND TRAY SCHEDULE YBI TRANSITION STRUCTURES ROADWAY EB	E-328A THRU E-328C
CONDUIT AND TRAY SCHEDULE YBI TRANSITION STRUCTURES GIRDER EB	E-329 THRU E-338
CONDUIT AND TRAY SCHEDULE YBI TRANSITION STRUCTURES GIRDER EB	E-338A THRU E-338B
CONDUIT AND TRAY SCHEDULE STRONG MOTION DETECTION SYSTEM	E-339 THRU E-347
CONDUIT AND TRAY SCHEDULE STRONG MOTION DETECTION SYSTEM	E-347A
CABLE AND CIRCUIT SCHEDULE	E-348 THRU E-397
CABLE AND CIRCUIT SCHEDULE	E-397A THRU E-397J

ELECTRICAL SHEET INDEX NO. 2

5 REVISED PER ADDENDUM No. 5 DATED JULY 30, 2009

E-2

REVISED BY	DATE REVISED
AB	IAH

CALCULATED-DESIGNED BY / CHECKED BY

CONSULTANT FUNCTIONAL SUPERVISOR: BEHZAD GOLEMOHAMMADI

STATE OF CALIFORNIA - DEPARTMENT OF TRANSPORTATION
Caltrans

LAST REVISION 00-00-00 | DATE PLOTTED => 28-JUL-2009 | TIME PLOTTED => 06:16

Dist	COUNTY	ROUTE	KILOMETER POST TOTAL PROJECT	SHEET No.	TOTAL SHEETS
04	SF	80	12.7/13.2	133	806

REGISTERED ELECTRICAL ENGINEER — 2/14/08 DATE

6-23-08
PLANS APPROVAL DATE

REGISTERED PROFESSIONAL ENGINEER — FADI WALIEDDINE No. 11465 Exp. 12/31/09 ELECTRICAL — STATE OF CALIFORNIA

THE STATE OF CALIFORNIA OR ITS OFFICERS OR AGENTS SHALL NOT BE RESPONSIBLE FOR THE ACCURACY OR COMPLETENESS OF ELECTRONIC COPIES OF THIS PLAN SHEET.

PB AMERICAS, Inc.
A Parsons Brinckerhoff Company
303 Second St., Suite 700N
San Francisco, CA 94107-1317

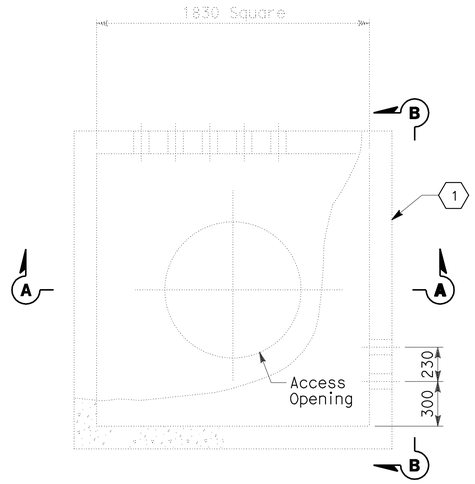

PLAN-MANHOLE-6
SCALE: 1:20 (12.47 kV)

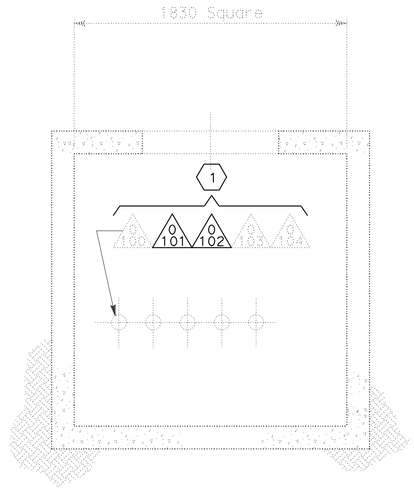

SECTION A-A
SCALE: 1:20

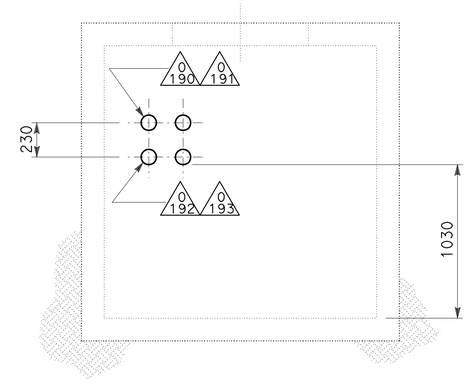

SECTION B-B
SCALE: 1:20

NOTES:

1. References:
   - For duct bank and manhole plan, see sheet E-7.
   - For substation conduit stub-ups, see sheet E-30.
   - For duct bank sections, see sheet E-32.
   - For typical manhole and duct bank details, see sheet E-35.

SHEET NOTES:

(1) Not in contract. Conduits and manholes shown are existing installed on previous contract. It is provided as reference for routing cable/circuits only.

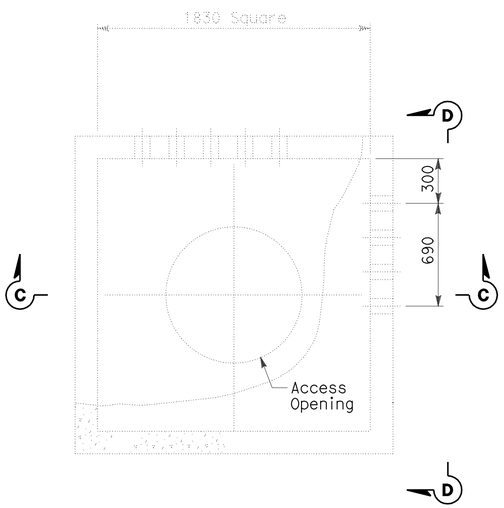

PLAN-MANHOLE-4
SCALE: 1:20 (TOS & COMMUNICATION)

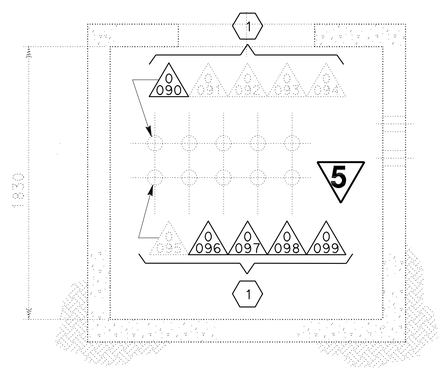

SECTION C-C
SCALE: 1:20

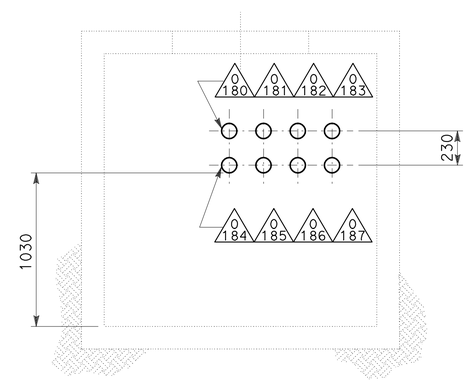

SECTION D-D
SCALE: 1:20

DETAILS
UNDERGROUND (ELECTRICAL DUCT BANK)
(MANHOLE PLANS AND SECTIONS)
SCALE AS NOTED

(5) **REVISED PER ADDENDUM No. 5 DATED JULY 30, 2009**

E-14

THIS PLAN ACCURATE FOR ELECTRICAL WORK ONLY.

ALL DIMENSIONS ARE IN MILLIMETERS UNLESS OTHERWISE SHOWN

REVISED	DATE	REVISED BY	DATE REVISED
AB	FK		

CALCULATED-DESIGNED BY / CHECKED BY

CONSULTANT FUNCTIONAL SUPERVISOR: BEHZAD GOLEMOHAMMADI

STATE OF CALIFORNIA - DEPARTMENT OF TRANSPORTATION

LAST REVISION 00-00-00 | DATE PLOTTED => 28-JUL-2009 | TIME PLOTTED => 06:16

Dist	COUNTY	ROUTE	KILOMETER POST TOTAL PROJECT	SHEET No.	TOTAL SHEETS
04	SF	80	12.7/13.2	143	806

REGISTERED ELECTRICAL ENGINEER 2/14/08 DATE

6-23-08
PLANS APPROVAL DATE

REGISTERED PROFESSIONAL ENGINEER FADI WALIEDDINE No. 11465 Exp. 12/31/09 ELECTRICAL STATE OF CALIFORNIA

THE STATE OF CALIFORNIA OR ITS OFFICERS OR AGENTS SHALL NOT BE RESPONSIBLE FOR THE ACCURACY OR COMPLETENESS OF ELECTRONIC COPIES OF THIS PLAN SHEET.

PB AMERICAS, Inc.
A Parsons Brinckerhoff Company
303 Second St., Suite 700N
San Francisco, CA 94107-1317

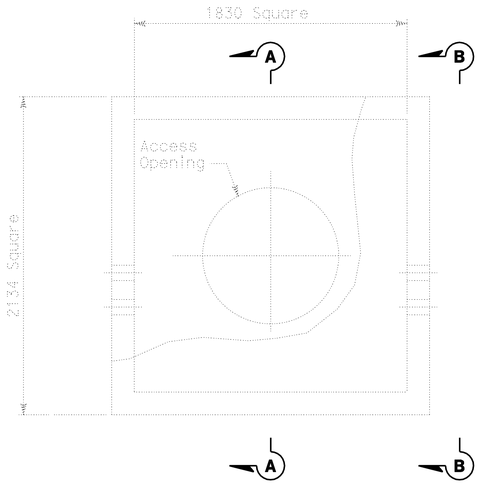

PLAN-MANHOLE-23
SCALE: 1:20 (12.47 kV)

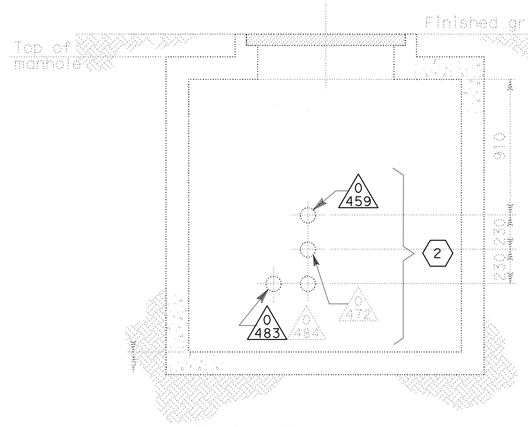

SECTION A-A
SCALE: 1:20

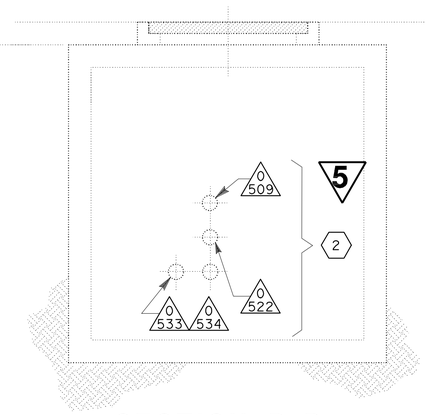

SECTION B-B
SCALE: 1:20

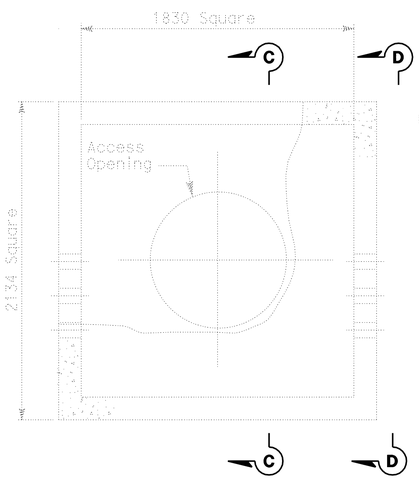

PLAN-MANHOLE-24
SCALE: 1:20 (TOS & COMMUNICATION)

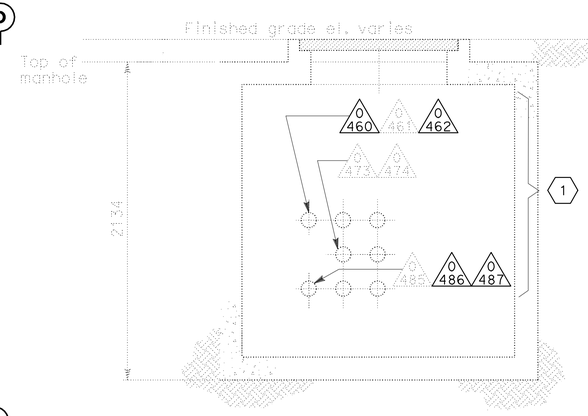

SECTION C-C
SCALE: 1:20

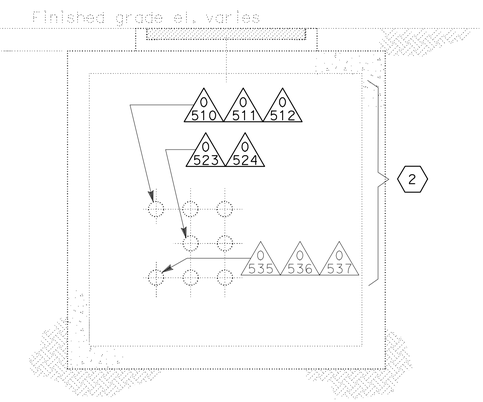

SECTION D-D
SCALE: 1:20

NOTES:

1. References:
   - For duct banks and manholes, see sheet E-10.
   - For duct bank sections, see sheet E-34.
   - For typical manhole and duct bank details, see sheet E-35.

SHEET NOTES:

(1) Not in contract. Conduits shown are existing installed on previous contract. It is provided as reference for routing cable/circuits only.

(2) Not in contract. Conduits shown are existing installed on previous contract. It is provided as reference for routing cable/circuits only. Existing conduit is tag prefixed (*) on conduit and tray schedules.

(5) **REVISED PER ADDENDUM No. 5 DATED JULY 30, 2009**

DETAILS
UNDERGROUND (ELECTRICAL DUCT BANK)
(MANHOLE PLANS AND SECTIONS)
SCALE AS NOTED

E-24

THIS PLAN ACCURATE FOR ELECTRICAL WORK ONLY.

ALL DIMENSIONS ARE IN MILLIMETERS UNLESS OTHERWISE SHOWN

STATE OF CALIFORNIA - DEPARTMENT OF TRANSPORTATION
Caltrans

CONSULTANT FUNCTIONAL SUPERVISOR: BEHZAD GOLEMOHAMMADI
CALCULATED-DESIGNED BY: AB
CHECKED BY: FK
REVISED BY / DATE REVISED

LAST REVISION 00-00-00 | DATE PLOTTED => 28-JUL-2009 | TIME PLOTTED => 06:16

Dist	COUNTY	ROUTE	KILOMETER POST TOTAL PROJECT	SHEET No.	TOTAL SHEETS
04	SF	80	12.7/13.2	147	806

REGISTERED ELECTRICAL ENGINEER 2/14/08 DATE

6-23-08
PLANS APPROVAL DATE

REGISTERED PROFESSIONAL ENGINEER FADI WALIEDDINE No. 11465 Exp. 12/31/09 ELECTRICAL STATE OF CALIFORNIA

THE STATE OF CALIFORNIA OR ITS OFFICERS OR AGENTS SHALL NOT BE RESPONSIBLE FOR THE ACCURACY OR COMPLETENESS OF ELECTRONIC COPIES OF THIS PLAN SHEET.

PB AMERICAS, Inc.
A Parsons Brinckerhoff Company
303 Second St., Suite 700N
San Francisco, CA 94107-1317

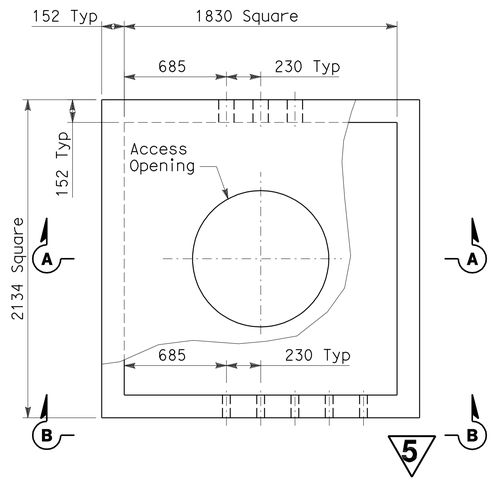

PLAN-MANHOLE-30
SCALE: 1:20 (600 V)

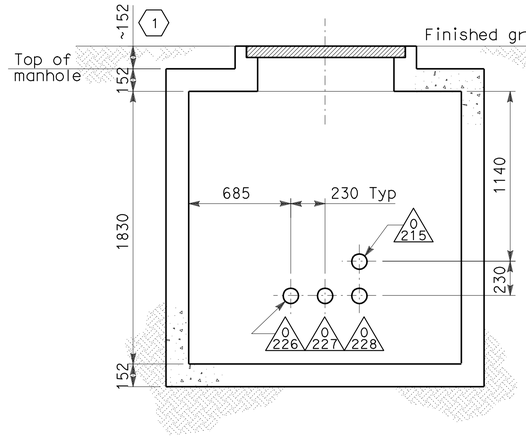

SECTION A-A
SCALE: 1:20

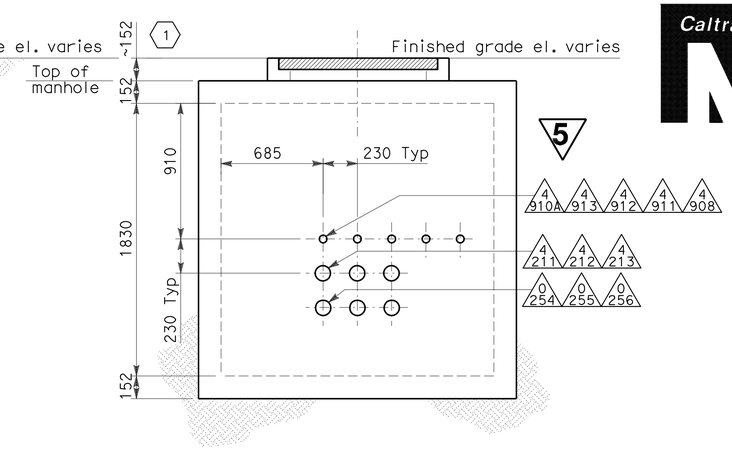

SECTION B-B
SCALE: 1:20

NOTES:

1. References:
   - For duct banks and manhole plan, see sheet E-8.
   - For duct bank sections, see sheets E-32 and E-33.
   - For typical duct bank and manhole details, see sheet E-35.

SHEET NOTES:

(1) Approximate distance of manhole necking or riser is from the finished grade and top of manhole. Maximum length of manhole necking or riser shall be 914 mm.

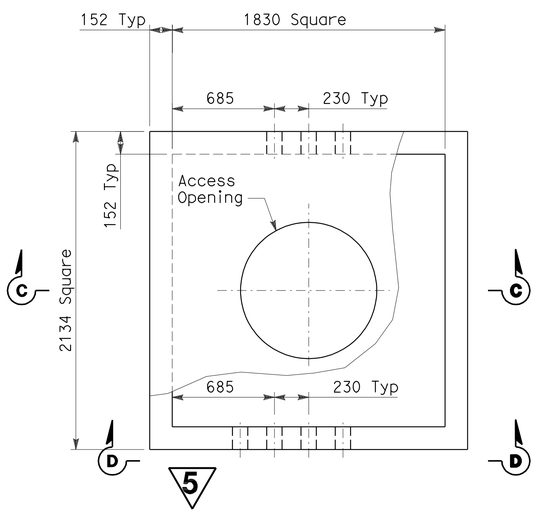

PLAN-MANHOLE-29
SCALE: 1:20 (600 V)

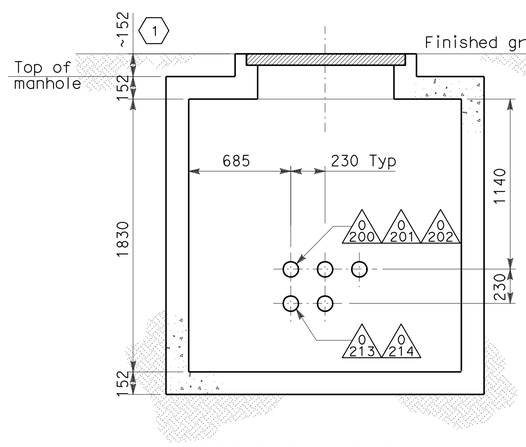

SECTION C-C
SCALE: 1:20

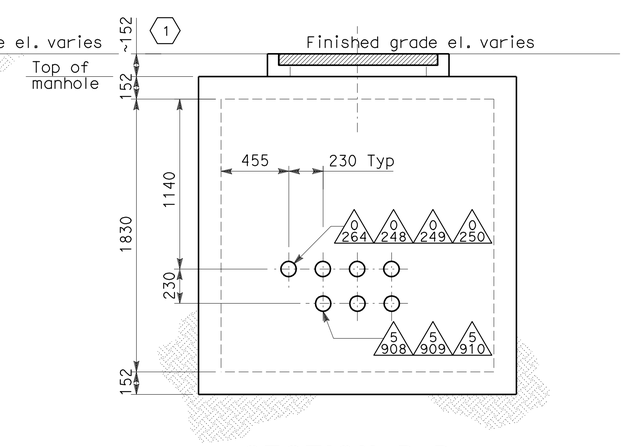

SECTION D-D
SCALE: 1:20

5 REVISED PER ADDENDUM No. 5 DATED JULY 30, 2009

DETAILS
UNDERGROUND (ELECTRICAL DUCT BANK)
(MANHOLE PLANS AND SECTIONS)
SCALE AS NOTED

E-28

THIS PLAN ACCURATE FOR ELECTRICAL WORK ONLY.

ALL DIMENSIONS ARE IN MILLIMETERS UNLESS OTHERWISE SHOWN

STATE OF CALIFORNIA - DEPARTMENT OF TRANSPORTATION
Caltrans

CONSULTANT FUNCTIONAL SUPERVISOR: BEHZAD GOLEMOHAMMADI
CALCULATED-DESIGNED BY: AB
CHECKED BY: FK
REVISED BY / DATE REVISED

LAST REVISION 00-00-00 | DATE PLOTTED => 28-JUL-2009 | TIME PLOTTED => 06:16

Dist	COUNTY	ROUTE	KILOMETER POST TOTAL PROJECT	SHEET No.	TOTAL SHEETS
04	SF	80	12.7/13.2	150	806

REGISTERED ELECTRICAL ENGINEER 2/14/08 DATE

6-23-08
PLANS APPROVAL DATE

REGISTERED PROFESSIONAL ENGINEER FADI WALIEDDINE No. 11465 Exp. 12/31/09 ELECTRICAL STATE OF CALIFORNIA

THE STATE OF CALIFORNIA OR ITS OFFICERS OR AGENTS SHALL NOT BE RESPONSIBLE FOR THE ACCURACY OR COMPLETENESS OF ELECTRONIC COPIES OF THIS PLAN SHEET.

PB AMERICAS, Inc.
A Parsons Brinckerhoff Company
303 Second St., Suite 700N
San Francisco, CA 94107-1317

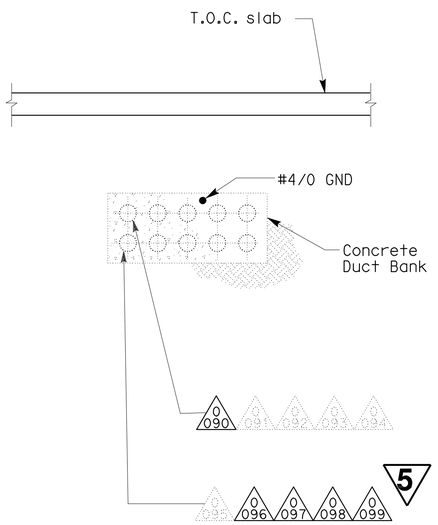

SECTION BB-BB (1)
SCALE: 1:20

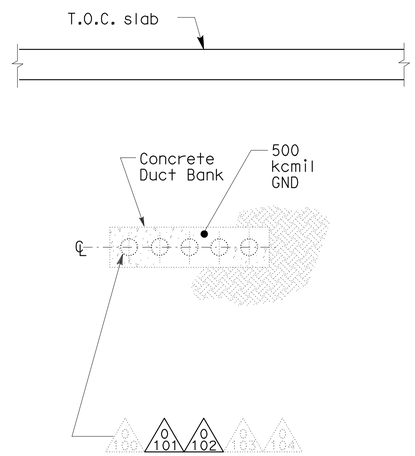

SECTION CC-CC (1)
SCALE: 1:20

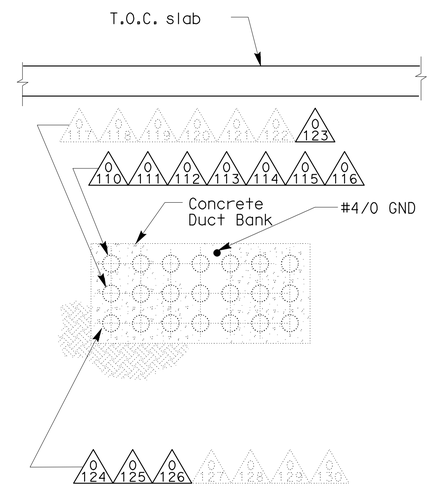

SECTION DD-DD (1)
SCALE: 1:20

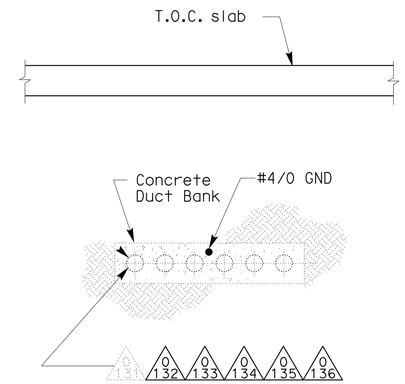

SECTION EE-EE (1)
SCALE: 1:20

NOTES:

1. References:
   - For manhole plans and sections, see sheets E-14 to E-15.
   - For substation conduit stub-ups plan, see sheet E-30.
   - For typical manhole and duct bank details, see sheet E-35.

SHEET NOTES:

(1) Not in contract. Conduits and grounds shown are existing installed on previous contract. It is provided as reference for routing cable/circuits only.

DETAILS
UNDERGROUND (ELECTRICAL DUCT BANK)
(DUCT BANK SECTIONS)

SCALE AS NOTED

E-31

(5) **REVISED PER ADDENDUM No. 5 DATED JULY 30, 2009**

THIS PLAN ACCURATE FOR ELECTRICAL WORK ONLY.

ALL DIMENSIONS ARE IN MILLIMETERS UNLESS OTHERWISE SHOWN

STATE OF CALIFORNIA - DEPARTMENT OF TRANSPORTATION
Caltrans

CONSULTANT FUNCTIONAL SUPERVISOR: BEHZAD GOLEMOHAMMADI
CALCULATED-DESIGNED BY: AB
CHECKED BY: FK
REVISED BY / DATE REVISED

LAST REVISION 00-00-00
DATE PLOTTED => 28-JUL-2009
TIME PLOTTED => 06:17

Dist	COUNTY	ROUTE	KILOMETER POST TOTAL PROJECT	SHEET No.	TOTAL SHEETS
04	SF	80	12.7/13.2	152	806

REGISTERED ELECTRICAL ENGINEER 2/14/08 DATE

6-23-08
PLANS APPROVAL DATE

REGISTERED PROFESSIONAL ENGINEER FADI WALIEDDINE No. 11465 Exp. 12/31/09 ELECTRICAL STATE OF CALIFORNIA

THE STATE OF CALIFORNIA OR ITS OFFICERS OR AGENTS SHALL NOT BE RESPONSIBLE FOR THE ACCURACY OR COMPLETENESS OF ELECTRONIC COPIES OF THIS PLAN SHEET.

PB AMERICAS, Inc.
A Parsons Brinckerhoff Company
303 Second St., Suite 700N
San Francisco, CA 94107-1317

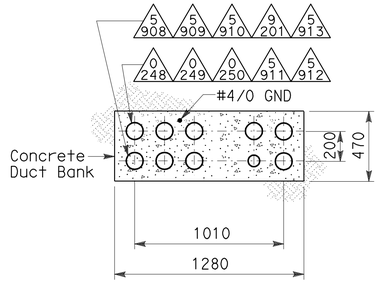

SECTION K-K
SCALE: 1:20

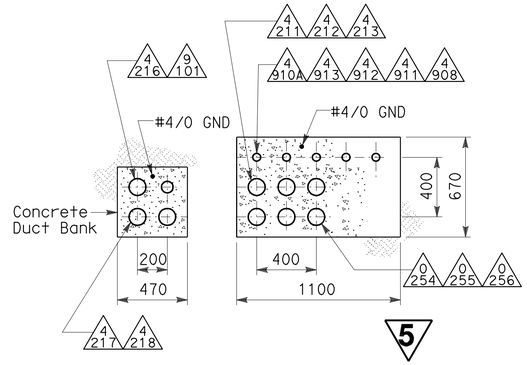

SECTION L-L
SCALE: 1:20

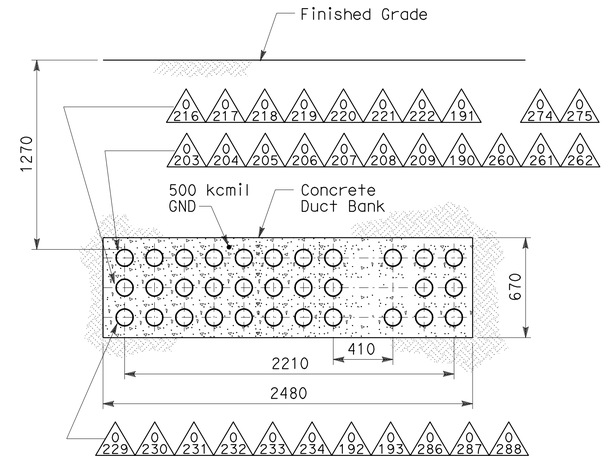

SECTION M-M
SCALE: 1:20

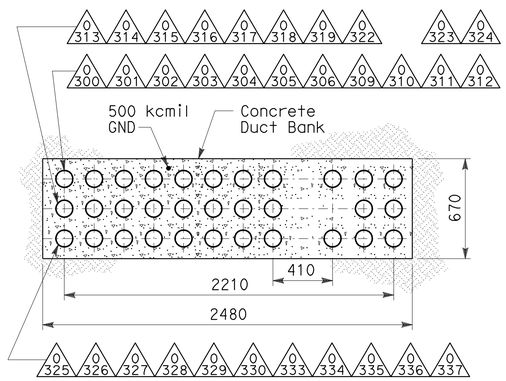

SECTION N-N
SCALE: 1:20

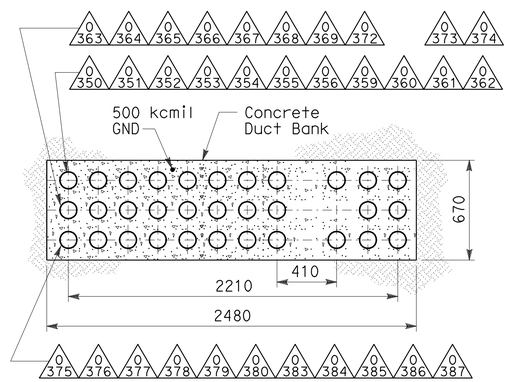

SECTION P-P
SCALE: 1:20

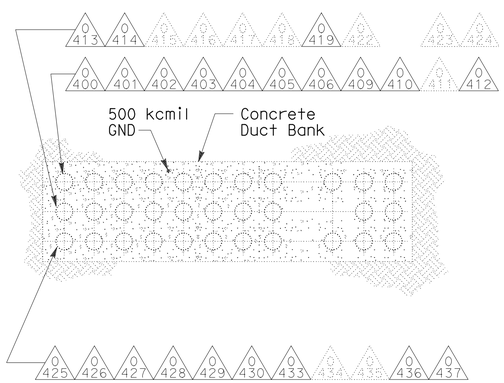

SECTION Q-Q (1)
SCALE: 1:20

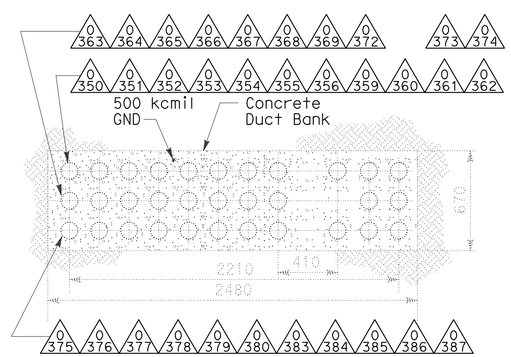

SECTION P1-P1 (2)
SCALE: 1:20

NOTES:

1. References:
   - For duct banks and manholes, see sheets E-8 and E-9.
   - For typical manhole and duct bank details, see sheet E-35.

SHEET NOTES:

(1) Not in contract. Conduits and grounds shown are existing installed on previous contract. It is provided as reference for routing cable/circuits only.

(2) Not in contract. Conduits and grounds shown are existing installed on previous contract. It is provided as reference for routing cable/circuits only. Existing conduit is tag prefixed (*) on conduit and tray schedules.

5 REVISED PER ADDENDUM No. 5 DATED JULY 30, 2009

DETAILS
UNDERGROUND (ELECTRICAL DUCT BANK)
(DUCT BANK SECTIONS)
SCALE AS NOTED

E-33

THIS PLAN ACCURATE FOR ELECTRICAL WORK ONLY.

ALL DIMENSIONS IN MILLIMETERS UNLESS OTHERWISE SHOWN

STATE OF CALIFORNIA - DEPARTMENT OF TRANSPORTATION
Caltrans

CONSULTANT FUNCTIONAL SUPERVISOR: BEHZAD GOLEMOHAMMADI
CALCULATED-DESIGNED BY: AB
CHECKED BY: FK
REVISED BY
DATE REVISED

LAST REVISION 00-00-00
DATE PLOTTED => 28-JUL-2009
TIME PLOTTED => 06:17

Dist	COUNTY	ROUTE	KILOMETER POST TOTAL PROJECT	SHEET No.	TOTAL SHEETS
04	SF	80	12.7/13.2	160	806

REGISTERED ELECTRICAL ENGINEER 2/14/08

6-23-08
PLANS APPROVAL DATE

REGISTERED PROFESSIONAL ENGINEER FADI WALIEDDINE No. 11465 Exp. 12/31/09 ELECTRICAL STATE OF CALIFORNIA

THE STATE OF CALIFORNIA OR ITS OFFICERS OR AGENTS SHALL NOT BE RESPONSIBLE FOR THE ACCURACY OR COMPLETENESS OF ELECTRONIC COPIES OF THIS PLAN SHEET.

PB AMERICAS, Inc.
A Parsons Brinckerhoff Company
303 Second St., Suite 700N
San Francisco, CA 94107-1317

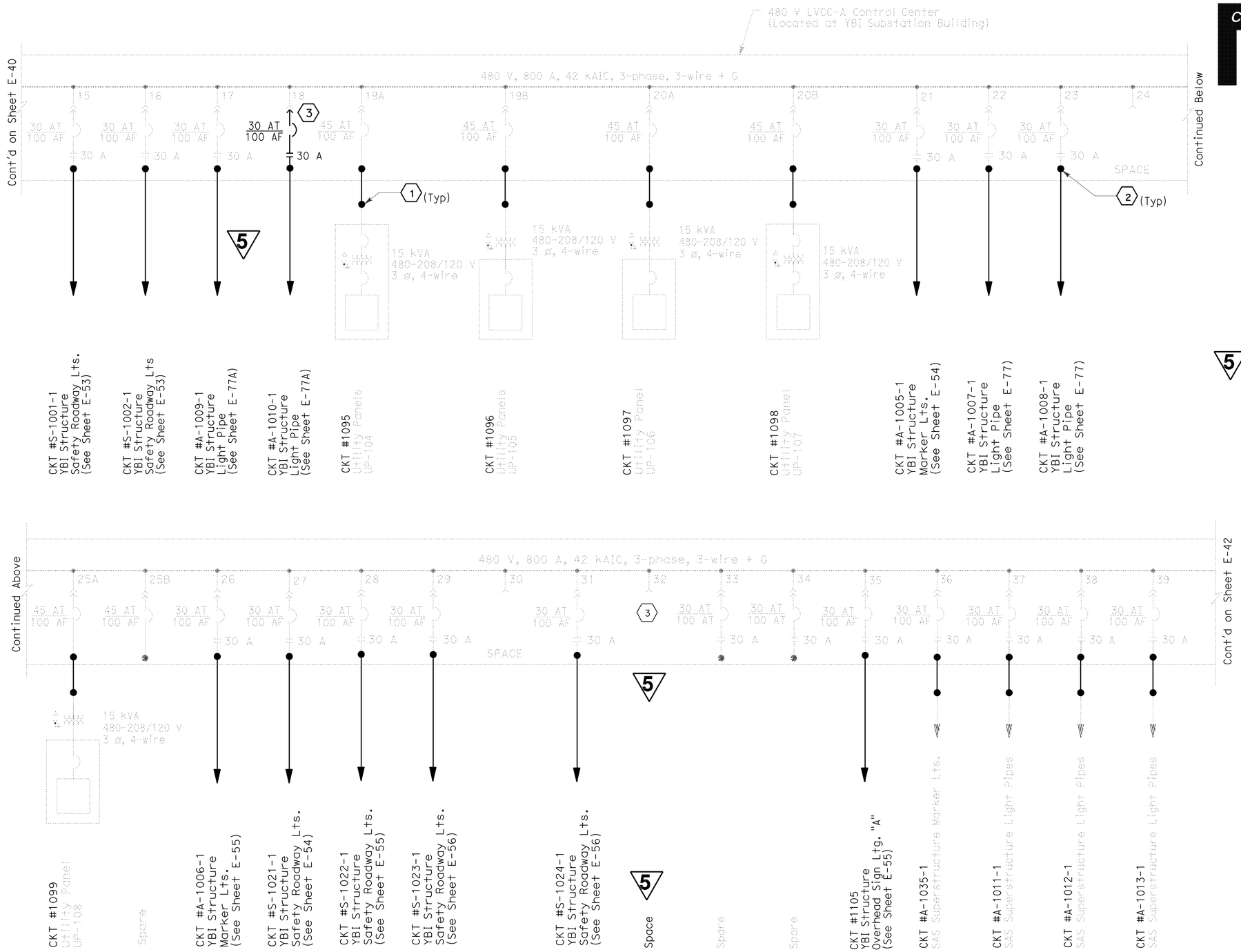

SHEET NOTES:

1. Conductors spliced inside Manhole-25, shall be moisture and water tight.
2. Provide appropriate connections for oversize feeder conductors.
3. The Contractor shall move circuit breaker/contactor from cubicle 32 and install to cubicle 18. Change nameplate as shown.

NOTES:

1. Only heavy lines are part of this contract (04-0120S4).

5 **REVISED PER ADDENDUM No. 5 DATED JULY 30, 2009**

THIS PLAN ACCURATE FOR ELECTRICAL WORK ONLY.

DETAILS
UNDERGROUND (ELECTRICAL DUCT BANK)
(480 V LVCC-A SINGLE LINE DIAGRAM)

NO SCALE

E-41

STATE OF CALIFORNIA - DEPARTMENT OF TRANSPORTATION
Caltrans

CONSULTANT FUNCTIONAL SUPERVISOR: BEHZAD GOLEMOHAMMADI
CALCULATED-DESIGNED BY: AB
CHECKED BY: FK
REVISED BY
DATE REVISED

LAST REVISION 00-00-00
DATE PLOTTED => 28-JUL-2009
TIME PLOTTED => 06:17

Dist	COUNTY	ROUTE	KILOMETER POST TOTAL PROJECT	SHEET No.	TOTAL SHEETS
04	SF	80	12.7/13.2	163	806

2/14/08
REGISTERED ELECTRICAL ENGINEER

6-23-08
PLANS APPROVAL DATE

REGISTERED PROFESSIONAL ENGINEER
FADI WALIEDDINE
No. 11465
Exp. 12/31/09
ELECTRICAL
STATE OF CALIFORNIA

THE STATE OF CALIFORNIA OR ITS OFFICERS OR AGENTS SHALL NOT BE RESPONSIBLE FOR THE ACCURACY OR COMPLETENESS OF ELECTRONIC COPIES OF THIS PLAN SHEET.

PB AMERICAS, Inc.
A Parsons Brinckerhoff Company
303 Second St., Suite 700N
San Francisco, CA 94107-1317

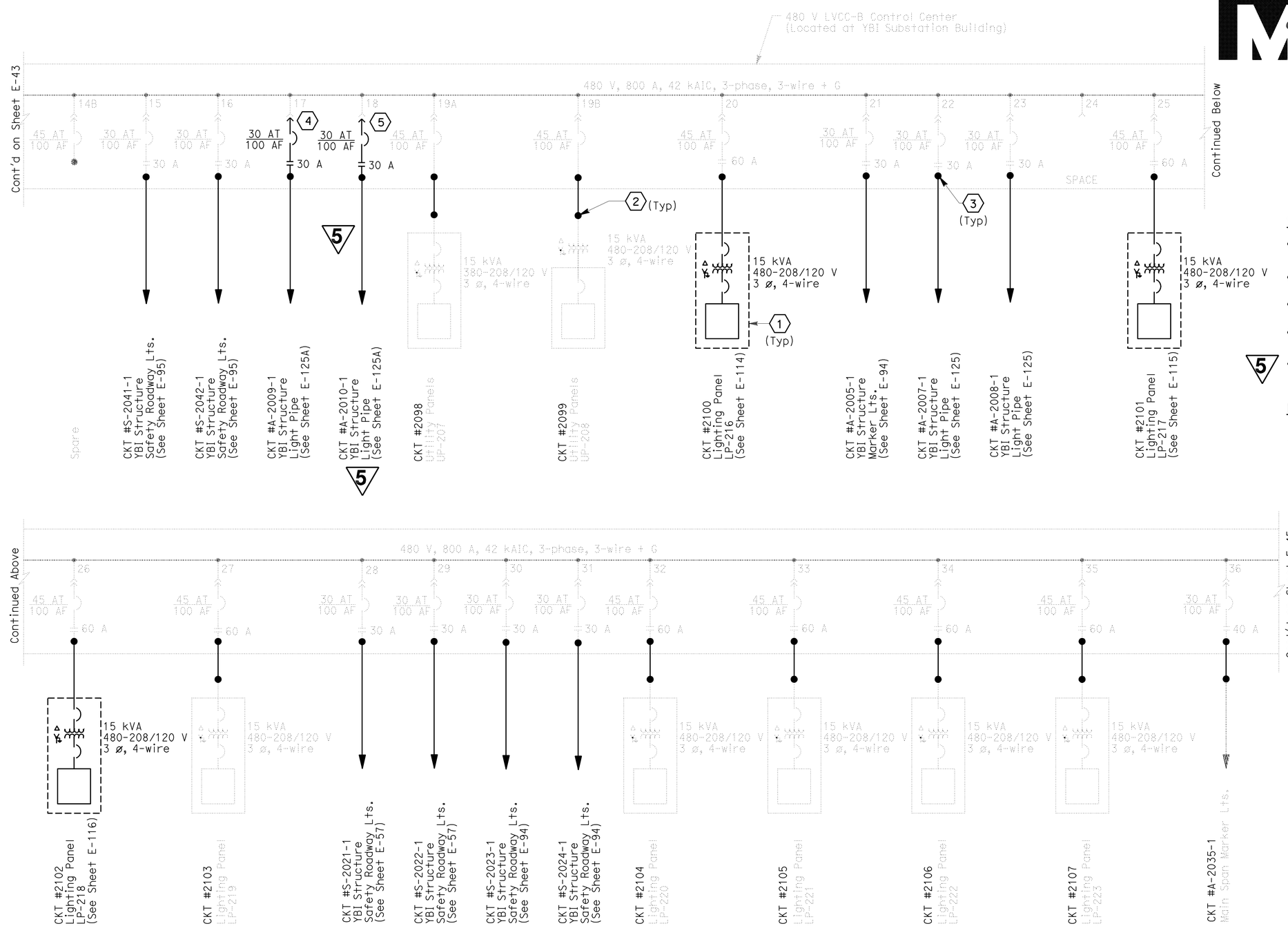

SHEET NOTES:

1. Enclosed in three separate stainless steel enclosures located on the service platform.
2. Conductors spliced inside Manhole-25.
3. Provide appropriate connections for oversize feeder conductors.
4. The Contractor shall install the circuit breaker/ contactor from cubicle 41.
5. The Contractor shall install the circuit breaker/ contactor from cubicle 46. Change nameplate as shown.

NOTES:

1. Only heavy lines are part of this contract (04-0120S4).

5 REVISED PER ADDENDUM No. 5 DATED JULY 30, 2009

DETAILS
UNDERGROUND (ELECTRICAL DUCT BANK)
(480 V LVCC-B SINGLE LINE DIAGRAM)

NO SCALE

THIS PLAN ACCURATE FOR ELECTRICAL WORK ONLY.

E-44

STATE OF CALIFORNIA - DEPARTMENT OF TRANSPORTATION
Caltrans

CONSULTANT FUNCTIONAL SUPERVISOR: BEHZAD GOLEMOHAMMADI
CALCULATED-DESIGNED BY: AB
CHECKED BY: FK
REVISED BY
DATE REVISED

LAST REVISION 00-00-00
DATE PLOTTED => 28-JUL-2009
TIME PLOTTED => 06:18

Dist	COUNTY	ROUTE	KILOMETER POST TOTAL PROJECT	SHEET No.	TOTAL SHEETS
04	SF	80	12.7/13.2	164	806

REGISTERED ELECTRICAL ENGINEER 2/14/08

6-23-08
PLANS APPROVAL DATE

REGISTERED PROFESSIONAL ENGINEER FADI WALIEDDINE No. 11465 Exp. 12/31/09 ELECTRICAL STATE OF CALIFORNIA

THE STATE OF CALIFORNIA OR ITS OFFICERS OR AGENTS SHALL NOT BE RESPONSIBLE FOR THE ACCURACY OR COMPLETENESS OF ELECTRONIC COPIES OF THIS PLAN SHEET.

PB AMERICAS, Inc.
A Parsons Brinckerhoff Company
303 Second St., Suite 700N
San Francisco, CA 94107-1317

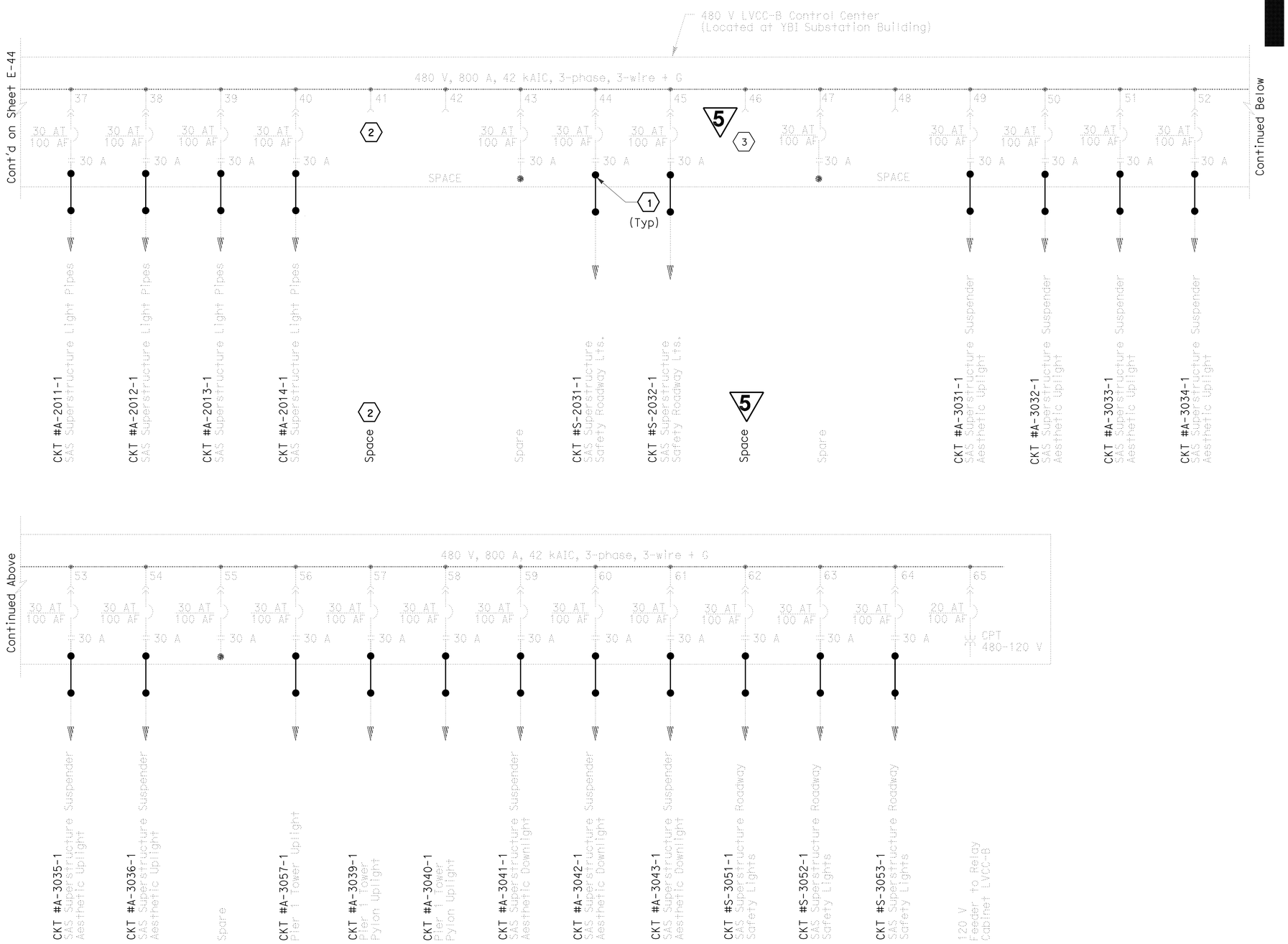

SHEET NOTES:

1. Provide appropriate connections for oversize feeder conductors.
2. The Contractor shall move the circuit breaker/ contactor from cubicle 41 to cubicle 17. Change nameplate to space.
3. (5) The Contractor shall move the circuit breaker/ contactor from cubicle 46. Change nameplate to space.

NOTES:

1. Only heavy lines are part of this contract (04-0120S4).

(5) **REVISED PER ADDENDUM No. 5 DATED JULY 30, 2009**

DETAILS
UNDERGROUND (ELECTRICAL DUCT BANK)
(480 V LVCC-B SINGLE LINE DIAGRAM)

THIS PLAN ACCURATE FOR ELECTRICAL WORK ONLY.

E-45

STATE OF CALIFORNIA - DEPARTMENT OF TRANSPORTATION
Caltrans

CONSULTANT FUNCTIONAL SUPERVISOR: BEHZAD GOLEMOHAMMADI
CALCULATED-DESIGNED BY: AB
CHECKED BY: FK
REVISED BY
DATE REVISED

LAST REVISION 00-00-00
DATE PLOTTED => 28-JUL-2009
TIME PLOTTED => 06:18

Dist	COUNTY	ROUTE	KILOMETER POST TOTAL PROJECT	SHEET No.	TOTAL SHEETS
04	SF	80	12.7/13.2	169	806

REGISTERED ELECTRICAL ENGINEER 2/14/08

6-23-08
PLANS APPROVAL DATE

REGISTERED PROFESSIONAL ENGINEER FADI WALIEDDINE No. 11465 Exp. 12/31/09 ELECTRICAL STATE OF CALIFORNIA

THE STATE OF CALIFORNIA OR ITS OFFICERS OR AGENTS SHALL NOT BE RESPONSIBLE FOR THE ACCURACY OR COMPLETENESS OF ELECTRONIC COPIES OF THIS PLAN SHEET.

PB AMERICAS, Inc.
A Parsons Brinckerhoff Company
303 Second St., Suite 700N
San Francisco, CA 94107-1317

Caltrans Metric

SHEET NOTES:

1. Conduit down into girder, see sheet E-81.
2. Conduit down into girder, see sheet E-74.
3. Conduit down into girder for overhead sign, see sheet E-81.
4. PL-W11 requires dual performed loops in each of six lanes. See sheet E-147 for typical detail.
5. Install 41 mm (F) conduit in the barrier from Platform IW to Bent 48. Future Camera #12 and #13 (By Others).
6. PB-F same as PB-COM, labeling to be determined by the Engineer.

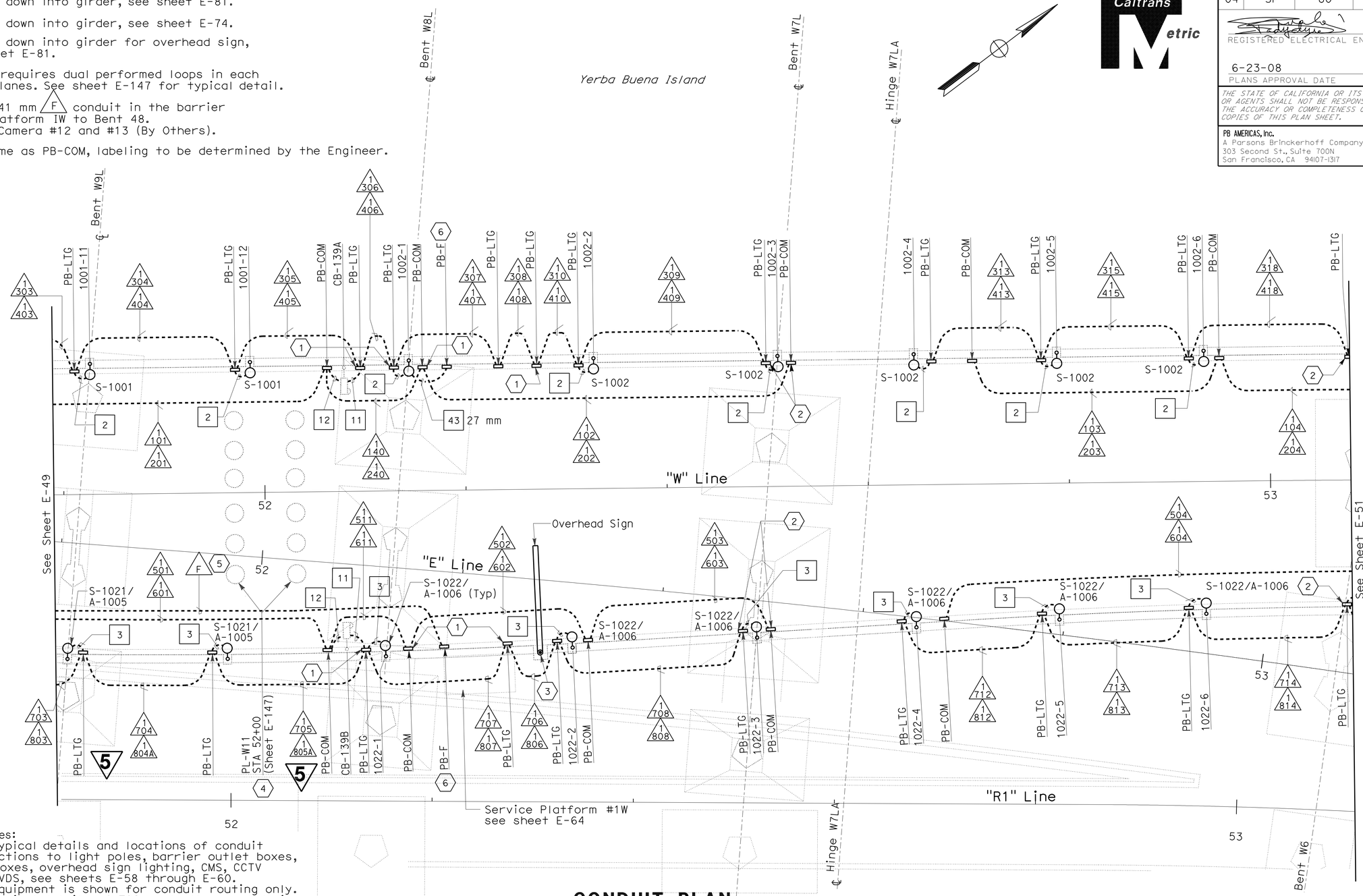

NOTES:

1. References:
   - For typical details and locations of conduit connections to light poles, barrier outlet boxes, call boxes, overhead sign lighting, CMS, CCTV and MVDS, see sheets E-58 through E-60.
   - TOS equipment is shown for conduit routing only. For typical details of TOS controllers and devices, see sheets E-146 through E-157.
   - For pull box schedule, see sheet E-69.
   - For call box mounting details, see sheet E-60.
   - For call box schedule and wiring diagram, see sheets E-170 & E-172.
   - For roadway fixture schdule, see sheet E-68.
   - For 480 V roadway lighting wiring diagram see sheets E-53 through E-57.

THIS PLAN IS ACCURATE FOR ELECTRICAL WORK ONLY.

CONDUIT PLAN

YBI TRANSITION STRUCTURES ROADWAY WESTBOUND
(LIGHTING AND ELECTRICAL SYSTEMS)

SCALE: 1:200

5 REVISED PER ADDENDUM No. 5 DATED JULY 30, 2009

ALL DIMENSIONS ARE IN METERS UNLESS OTHERWISE SHOWN

E-50

STATE OF CALIFORNIA - DEPARTMENT OF TRANSPORTATION
Caltrans

CONSULTANT FUNCTIONAL SUPERVISOR: BEHZAD GOLEMOHAMMADI
CALCULATED-DESIGNED BY: FK
CHECKED BY: AB
REVISED BY / DATE REVISED

LAST REVISION 00-00-00 | DATE PLOTTED => 28-JUL-2009 | TIME PLOTTED => 06:18

Dist	COUNTY	ROUTE	KILOMETER POST TOTAL PROJECT	SHEET No.	TOTAL SHEETS
04	SF	80	12.7/13.2	170	806

REGISTERED ELECTRICAL ENGINEER 2/14/08

6-23-08
PLANS APPROVAL DATE

REGISTERED PROFESSIONAL ENGINEER FADI WALIEDDINE No. 11465 Exp. 12/31/09 ELECTRICAL STATE OF CALIFORNIA

THE STATE OF CALIFORNIA OR ITS OFFICERS OR AGENTS SHALL NOT BE RESPONSIBLE FOR THE ACCURACY OR COMPLETENESS OF ELECTRONIC COPIES OF THIS PLAN SHEET.

PB AMERICAS, Inc.
A Parsons Brinckerhoff Company
303 Second St., Suite 700N
San Francisco, CA 94107-1317

Caltrans Metric

SHEET NOTES:

1. Conduit down into girder, see sheet E-75.
2. 27 mm conduit down into girder for future light pipe, see sheet E-75.
3. PB-F same as PB-COM, labeling to be determined by the Engineer.
4. Install 41 mm (F) conduit in barrier from Platform 2W for future Camera #15 (By others).

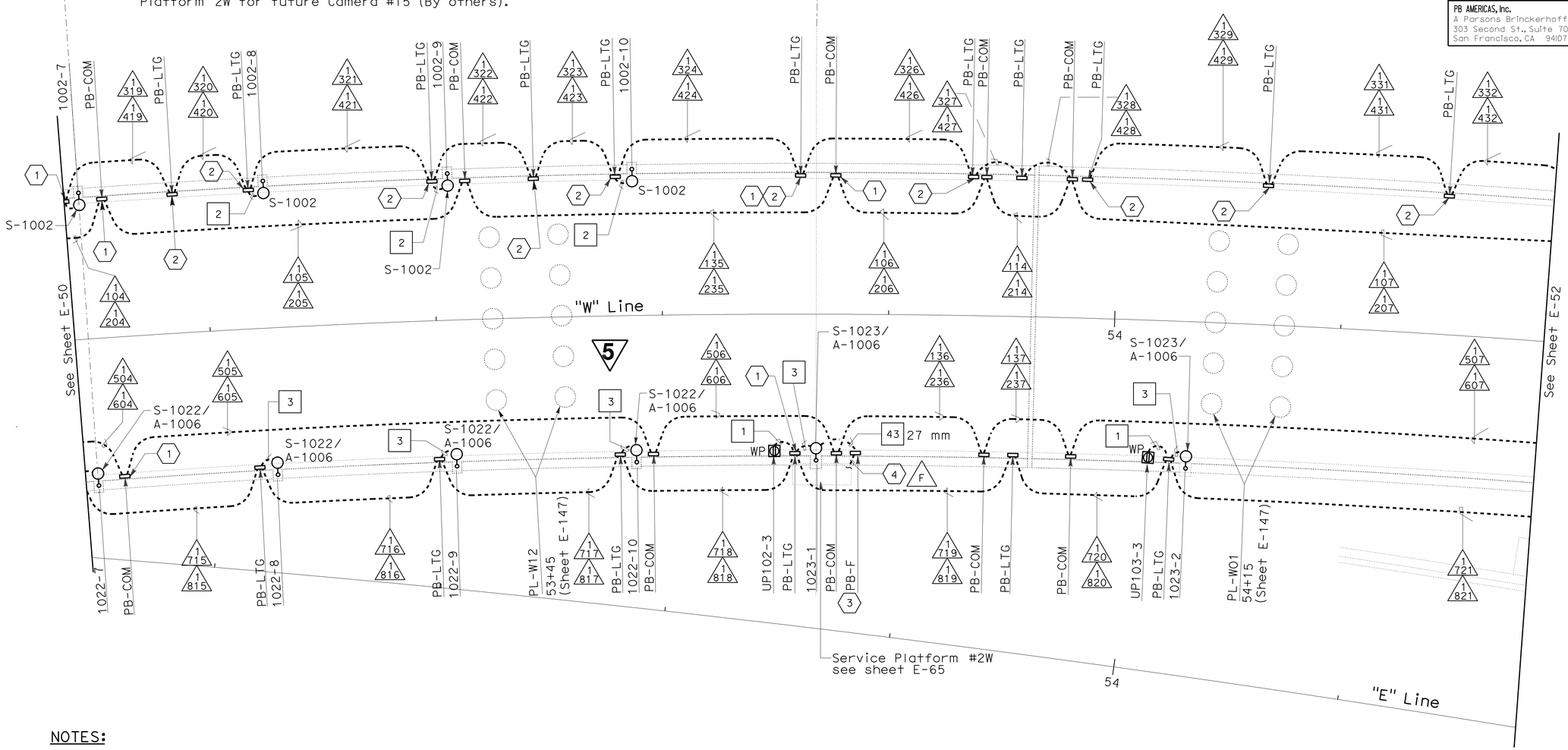

NOTES:

1. References:
   - For typical details and locations of conduit connections to light poles, barrier outlet boxes, call boxes, overhead sign lighting, CMS, CCTV and MVDS, see sheets E-58 through E-60.
   - TOS equipment is shown for conduit routing only. For typical details of TOS controllers and devices, see sheets E-146 through E-157.
   - For pull box schedule, see sheet E-69.
   - For roadway light pole and fixture schedule, see sheet E-68.
   - For call box schedule and wiring diagram, see sheets E-170 & E-172.
   - For 480V roadway lighting wiring diagram see sheets E-53 through E-57.

CONDUIT PLAN

YBI TRANSITION STRUCTURES ROADWAY WESTBOUND (LIGHTING AND ELECTRICAL SYSTEMS)

SCALE: 1:200

5 REVISED PER ADDENDUM No. 5 DATED JULY 30, 2009

THIS PLAN IS ACCURATE FOR ELECTRICAL WORK ONLY.

ALL DIMENSIONS ARE IN METERS UNLESS OTHERWISE SHOWN

E-51

REVISED BY	DATE REVISED
FK	AB

CALCULATED-DESIGNED BY / CHECKED BY

CONSULTANT FUNCTIONAL SUPERVISOR: BEHZAD GOLEMOHAMMADI

STATE OF CALIFORNIA - DEPARTMENT OF TRANSPORTATION

Caltrans

LAST REVISION 00-00-00 | DATE PLOTTED => 28-JUL-2009 | TIME PLOTTED => 06:18

Dist	COUNTY	ROUTE	KILOMETER POST TOTAL PROJECT	SHEET No.	TOTAL SHEETS
04	SF	80	12.7/13.2	174	806

REGISTERED ELECTRICAL ENGINEER 2/14/08 DATE

6-23-08
PLANS APPROVAL DATE

REGISTERED PROFESSIONAL ENGINEER FADI WALIEDDINE No. 11465 Exp. 12/31/09 ELECTRICAL STATE OF CALIFORNIA

THE STATE OF CALIFORNIA OR ITS OFFICERS OR AGENTS SHALL NOT BE RESPONSIBLE FOR THE ACCURACY OR COMPLETENESS OF ELECTRONIC COPIES OF THIS PLAN SHEET.

PB AMERICAS, Inc.
A Parsons Brinckerhoff Company
303 Second St., Suite 700N
San Francisco, CA 94107-1317

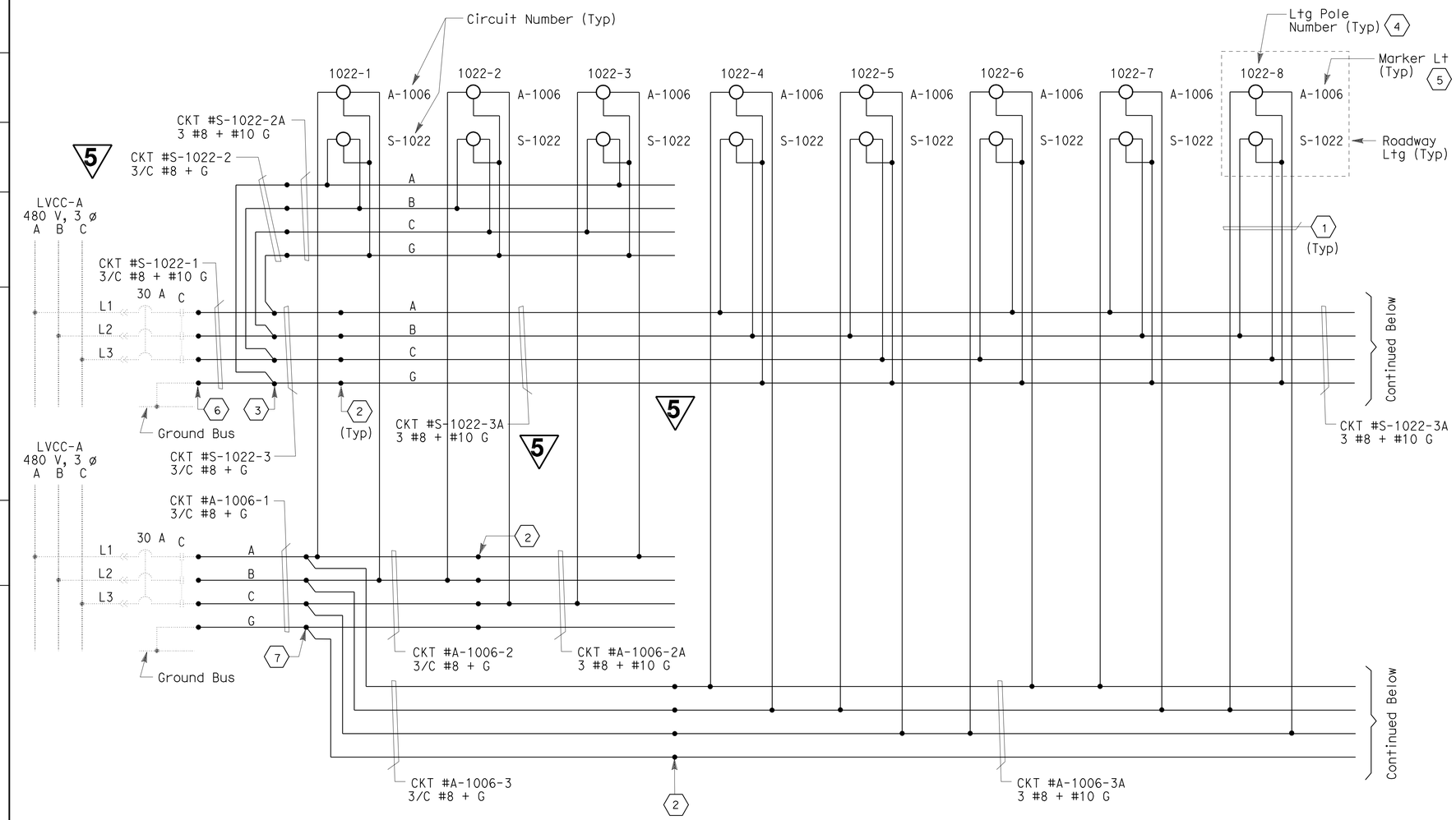

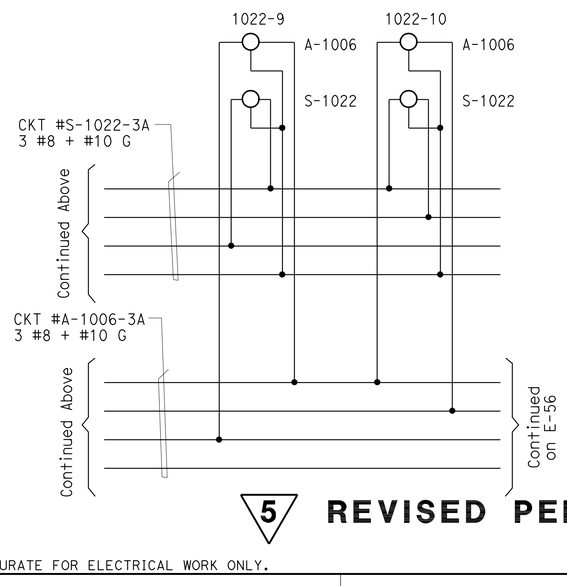

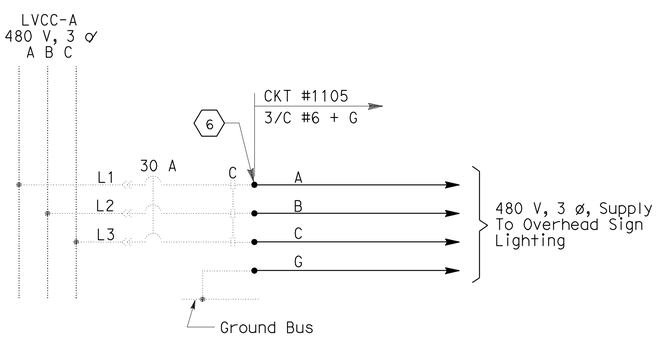

480 V OVERHEAD SIGN

SHEET NOTES:

1. #10 AWG single conductors, see Detail 1.
2. Conductors spliced inside pull box PB-LTG.
3. Conductors spliced inside PB-2J (located inside 600 V vault 1W).
4. For number of light fixtures on each light pole, see sheet E-68.
5. Low voltage marker light assembly provided with 480 V, 1 phase, power converter.
6. Terminate conductor in existing LVCC-A.
7. Conductors spliced inside PB-2J (located inside 600 V vault 2W).
8. For type and size of in line fusing see Caltrans standard plans. Locate inside terminal box at the base of each roadway lighting pole.

NOTES:

1. References:
   - For LVCC-A single line diagram, see sheet E-41.
   - For pull box schedule, see sheet E-69.

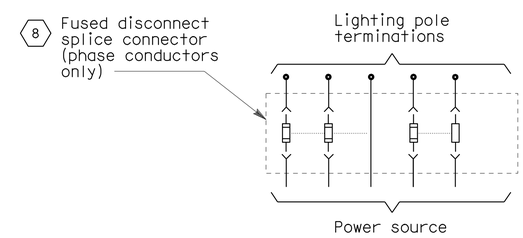

DETAIL-1
(TYP FOR EACH LTG POLE)

DETAILS
YBI TRANSITION STRUCTURES ROADWAY WESTBOUND (480 V ROADWAY LIGHTING WIRING DIAGRAM)
NO SCALE

5 REVISED PER ADDENDUM No. 5 DATED JULY 30, 2009

E-55

THIS PLAN ACCURATE FOR ELECTRICAL WORK ONLY.

ALL DIMENSIONS ARE IN MILLIMETERS UNLESS OTHERWISE SHOWN

STATE OF CALIFORNIA - DEPARTMENT OF TRANSPORTATION
Caltrans

CONSULTANT FUNCTIONAL SUPERVISOR: BEHZAD ZADI
CALCULATED-DESIGNED BY: FK
CHECKED BY: AB
REVISED BY / DATE REVISED

LAST REVISION 00-00-00
DATE PLOTTED => 28-JUL-2009
TIME PLOTTED => 06:19

Dist	COUNTY	ROUTE	KILOMETER POST TOTAL PROJECT	SHEET No.	TOTAL SHEETS
04	SF	80	12.7/13.2	179	806

REGISTERED ELECTRICAL ENGINEER 2/14/08

6-23-08
PLANS APPROVAL DATE

REGISTERED PROFESSIONAL ENGINEER FADI WALIEDDINE No. 11465 Exp. 12/31/09 ELECTRICAL STATE OF CALIFORNIA

THE STATE OF CALIFORNIA OR ITS OFFICERS OR AGENTS SHALL NOT BE RESPONSIBLE FOR THE ACCURACY OR COMPLETENESS OF ELECTRONIC COPIES OF THIS PLAN SHEET.

PB AMERICAS, Inc.
A Parsons Brinckerhoff Company
303 Second St., Suite 700N
San Francisco, CA 94107-1317

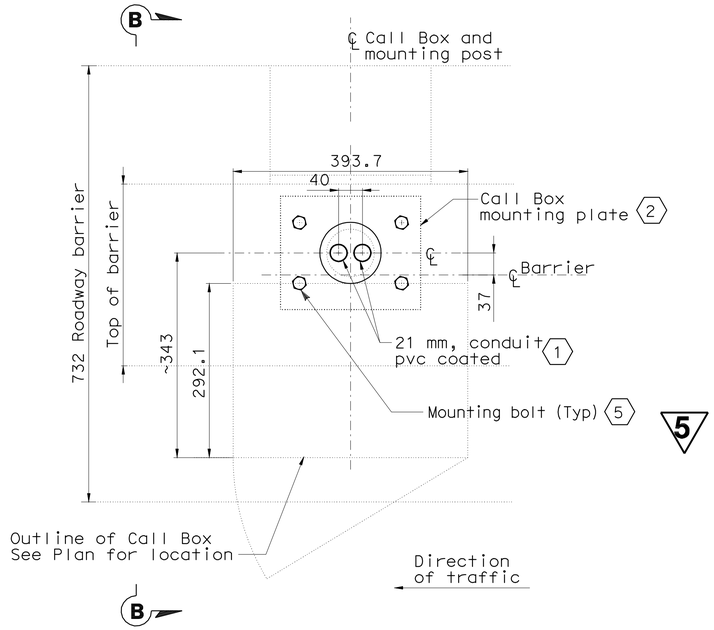

PLAN

CONDUIT STUB AND MOUNTING OF CALL BOX AT BARRIER
SCALE 1:4

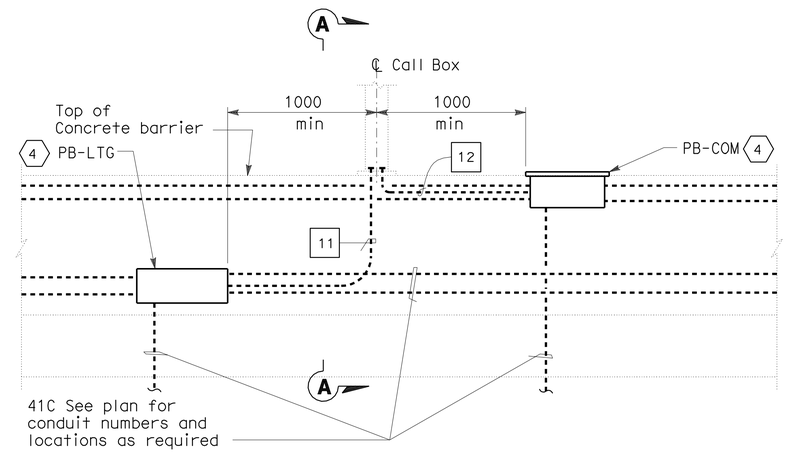

LONGITUDINAL SECTION

TYPICAL CONDUIT ROUTING INSIDE CONCRETE BARRIER
NO SCALE

SHEET NOTES:

1. Bond grounding bushing to ground lug Call Box with #6 bare copper wire.
2. The Engineer will provide information for base plate sizes, hex nuts and flat washer as required.
3. For mounting details of call box, see Structural Details and AS Sheets.
4. Location of devices inside concrete barrier shall be installed by direction of the Engineer.
5. (4) 19.05 Dia. HSB (ASTM A325) 180 mm concrete embedment and 130 mm bolt projection from top of concrete.

5

NOTES:

1. References:
   - For call box schedule and locations, see sheet E-172.
   - For pull box schedule, see sheet E-69.
2. For call box mounting, see structural dwgs.
3. For pull box installation, see Std Plans ES-9C and ES-9D. Unless noted otherwise U.N.O.

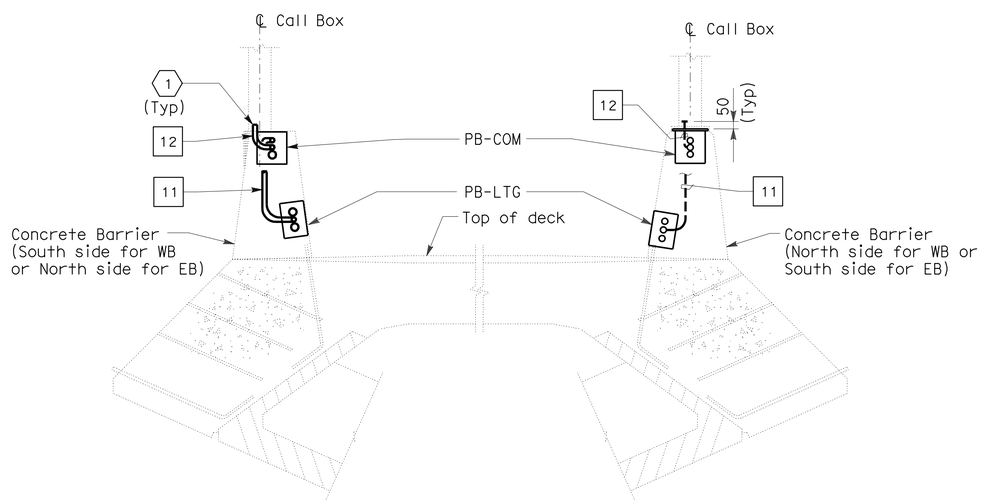

SECTION A-A

NO SCALE

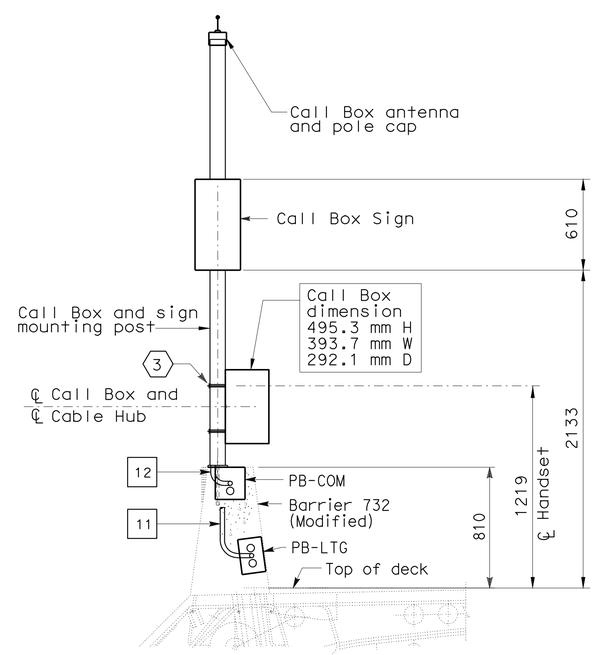

SECTION B-B

SCALE 1:20

DETAILS

YBI TRANSITION STRUCTURES ROADWAY WESTBOUND (CONDUIT LOCATIONS)

SCALE AS NOTED

E-60

5 **REVISED PER ADDENDUM No. 5 DATED JULY 30, 2009**

THIS PLAN ACCURATE FOR ELECTRICAL WORK ONLY.

ALL DIMENSIONS ARE IN MILLIMETERS UNLESS OTHERWISE SHOWN

STATE OF CALIFORNIA - DEPARTMENT OF TRANSPORTATION
Caltrans

CONSULTANT FUNCTIONAL SUPERVISOR: BEHZAD GOLEMOHAMMADI
CALCULATED-DESIGNED BY: AB
CHECKED BY: FK
REVISED BY
DATE REVISED

LAST REVISION 00-00-00
DATE PLOTTED => 28-JUL-2009
TIME PLOTTED => 06:19

Dist	COUNTY	ROUTE	KILOMETER POST TOTAL PROJECT	SHEET No.	TOTAL SHEETS
04	SF	80	12.7/13.2	183	806

REGISTERED ELECTRICAL ENGINEER 2/14/08

6-23-08
PLANS APPROVAL DATE

REGISTERED PROFESSIONAL ENGINEER FADI WALIEDDINE No. 11465 Exp. 12/31/09 ELECTRICAL STATE OF CALIFORNIA

THE STATE OF CALIFORNIA OR ITS OFFICERS OR AGENTS SHALL NOT BE RESPONSIBLE FOR THE ACCURACY OR COMPLETENESS OF ELECTRONIC COPIES OF THIS PLAN SHEET.

PB AMERICAS, Inc.
A Parsons Brinckerhoff Company
303 Second St., Suite 700N
San Francisco, CA 94107-1317

Caltrans Metric

NOTES:

1. For pull box schedule, refer to sheet E-69.
2. Conduit openings and locations through diaphragm, refer to structures sheets.
3. For details of embedd steel plates, refer to AS sheets.
4. Ground conductor routed outside or exposed shall be green insulated.
5. Conduits terminating inside vaults shall be provided with ground insulated bushing connected to ground bar.

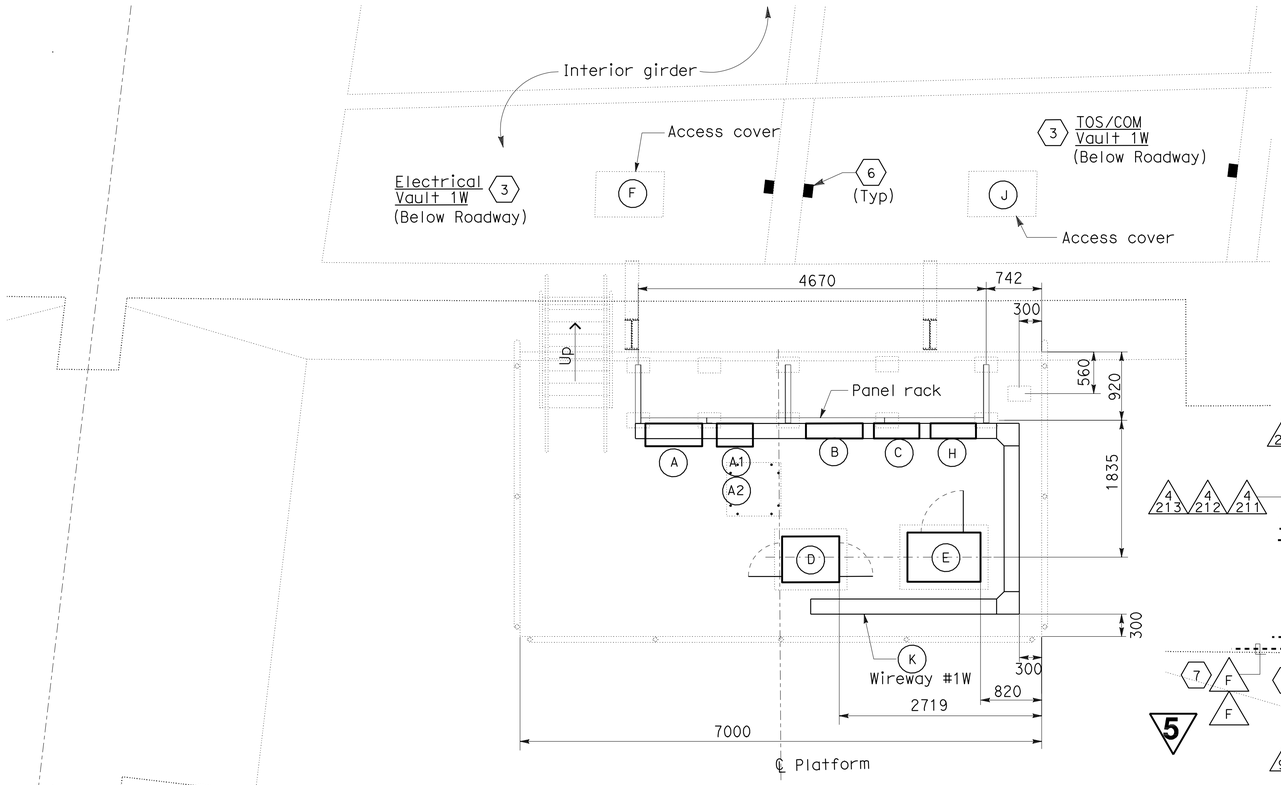

SERVICE PLATFORM #1W EQUIPMENT ARRANGEMENT PLAN (2)

SCALE: 1:40

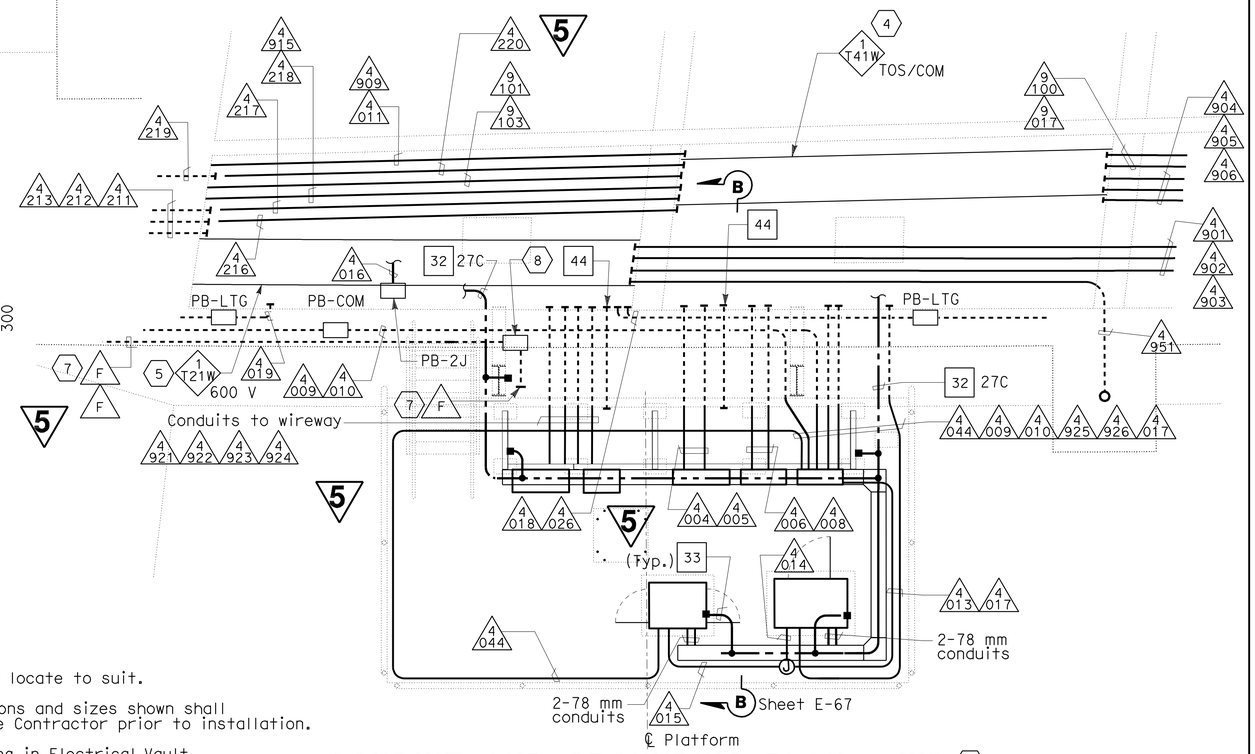

CONDUIT AND GROUNDING PLAN - WB (3)

SCALE: 1:40

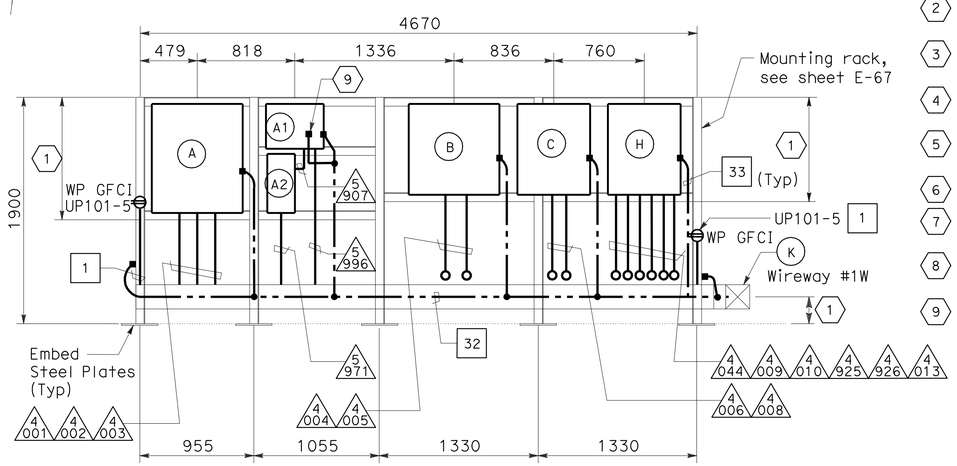

PANEL RACK-ELEVATION

SCALE: 1:25

SHEET NOTES:

(1) The Contractor to locate to suit.

(2) Equipment dimensions and sizes shown shall be verified by the Contractor prior to installation.

(3) For conduit routing in Electrical Vault and TOS/COM Vaults, see sheet E-81.

(4) Install 610 mm solid bottom tray with cover for routing TOS/COM cables.

(5) Install 610 mm ladder type tray for routing 600 V rated cable.

(6) Install pull irons in all vaults, cast in each end wall.

(7) Install 41 mm (F) conduit from Platform 1W, in the barrier.

(8) PB-F same as PB-COM, label to be determined by the Engineer.

(9) Connect to transformer neutral. See panel schedule.

EQUIPMENT SCHEDULE: (2)

(A) Utility Panel UP-101, 100 A 208/120 V, 3 Phase, 4 Wires (PB-8A).

(A1) 15 kVA Transformer, 3 Phase, 4 Wires 480 V-208/120 V, 60 HZ. (Nema 4X) Size: 375 H x 485 W x 311 D.

(A2) Enclosed molded case circuit breaker Size: 495 H x 232 W x 124 D.

(B) Scada Communication Terminal Box #COM-01W (PB-7B).

(C) Telephone Terminal Box #TEL-01W (PB-7C).

(D) Controller Cabinet #TOS-01WA Size: 1625 H x 615 W x 768 D.

(E) TOS Splice Cabinet TOS-01WS Size: 1400 H x 980 W x 660 D.

(H) PB-2B, mounted on panel rack.

(K) 600 V Wireway #1W, (Nema 4X) 203 H x 203 W

MISCELLANEOUS:

(F) Deck utility opening and cover. Engraving "ELECTRICAL VAULT 1W". Refer to Structures plan sheet, miscellaneous superstructure details No. 2.

(J) Deck utility opening and cover. Engraving "TOS/COM 1W". Refer to Structures plan sheet, miscellaneous superstructure details No. 2.

DETAILS

YBI TRANSITION STRUCTURES ROADWAY WESTBOUND (PLATFORM 1W ARRANGEMENT AND PLAN)

(5) **REVISED PER ADDENDUM No. 5 DATED JULY 30, 2009**

THIS PLAN IS ACCURATE FOR ELECTRICAL WORK ONLY.

ALL DIMENSIONS ARE IN MILLIMETERS UNLESS OTHERWISE SHOWN

SCALE AS NOTED

E-64

REVISED BY	DATE REVISED
FK	AB

CALCULATED-DESIGNED BY FK
CHECKED BY AB
CONSULTANT FUNCTIONAL SUPERVISOR BEHZAD GOLEMOHAMMADI

STATE OF CALIFORNIA - DEPARTMENT OF TRANSPORTATION
Caltrans

LAST REVISION 00-00-00
DATE PLOTTED => 28-JUL-2009
TIME PLOTTED => 06:19

Dist	COUNTY	ROUTE	KILOMETER POST TOTAL PROJECT	SHEET No.	TOTAL SHEETS
04	SF	80	12.7/13.2	184	806

REGISTERED ELECTRICAL ENGINEER 2/14/08

6-23-08
PLANS APPROVAL DATE

REGISTERED PROFESSIONAL ENGINEER FADI WALIEDDINE No. 11465 Exp. 12/31/09 ELECTRICAL STATE OF CALIFORNIA

THE STATE OF CALIFORNIA OR ITS OFFICERS OR AGENTS SHALL NOT BE RESPONSIBLE FOR THE ACCURACY OR COMPLETENESS OF ELECTRONIC COPIES OF THIS PLAN SHEET.

PB AMERICAS, Inc.
A Parsons Brinckerhoff Company
303 Second St., Suite 700N
San Francisco, CA 94107-1317

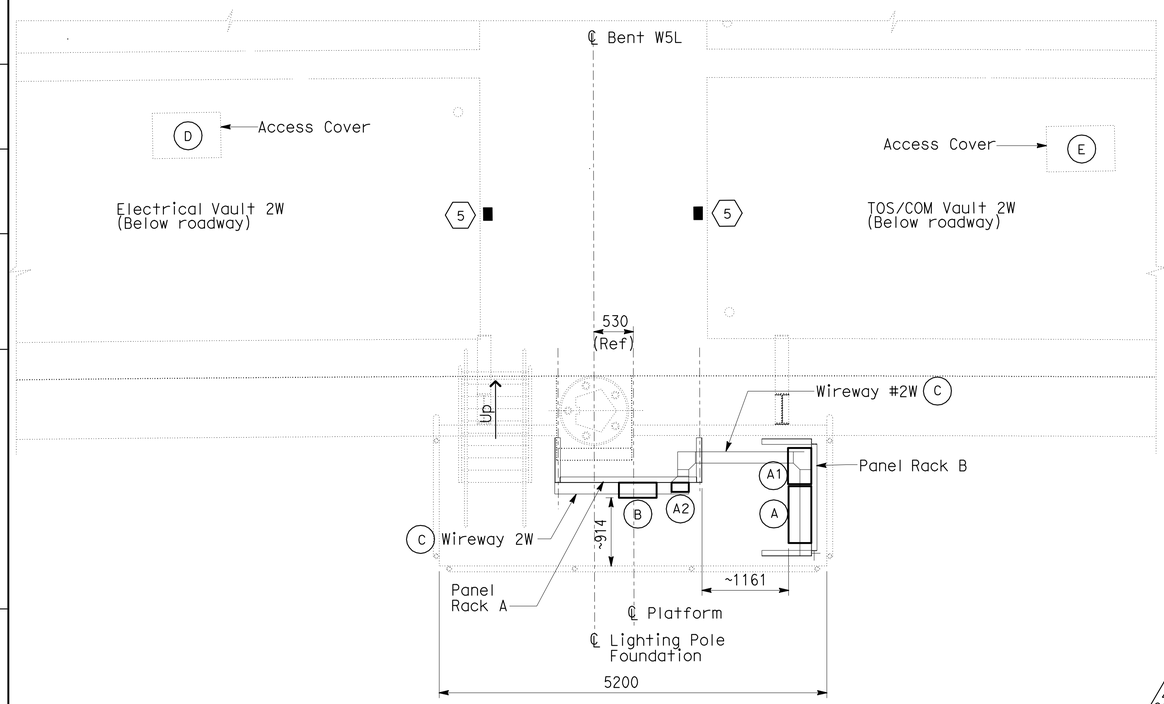

SERVICE PLATFORM #2W EQUIPMENT ARRANGEMENT PLAN (2)

SCALE: 1:40

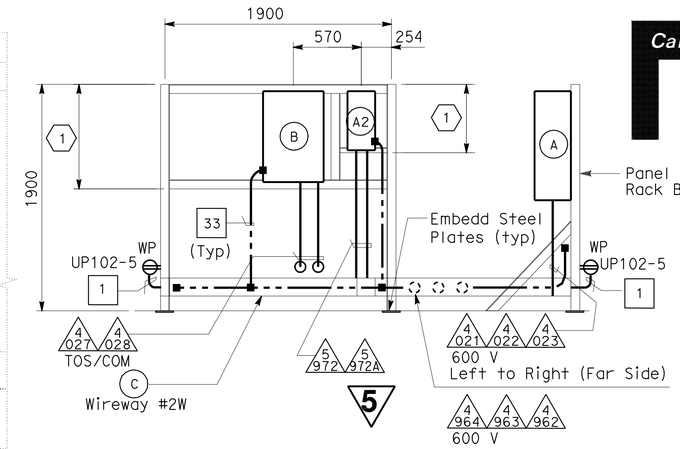

PANEL RACK A

SCALE: 1:25

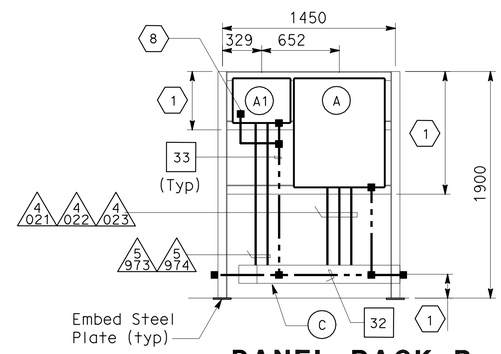

PANEL RACK B

SCALE: 1:25

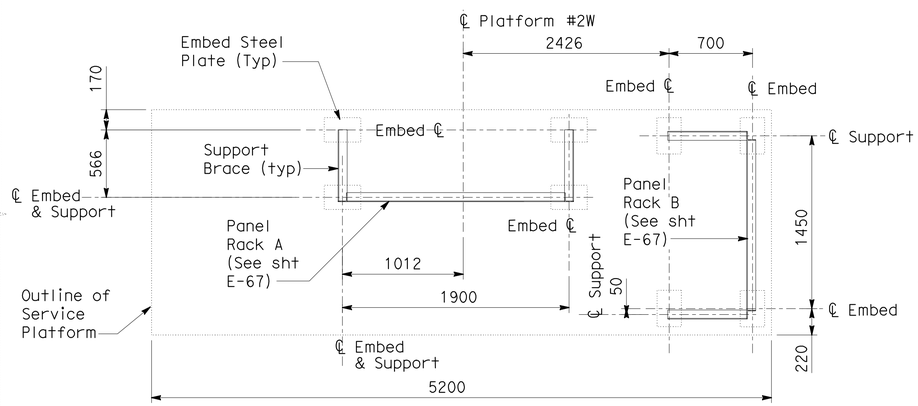

SUPPORT LOCATION - PLAN

SCALE: 1:25

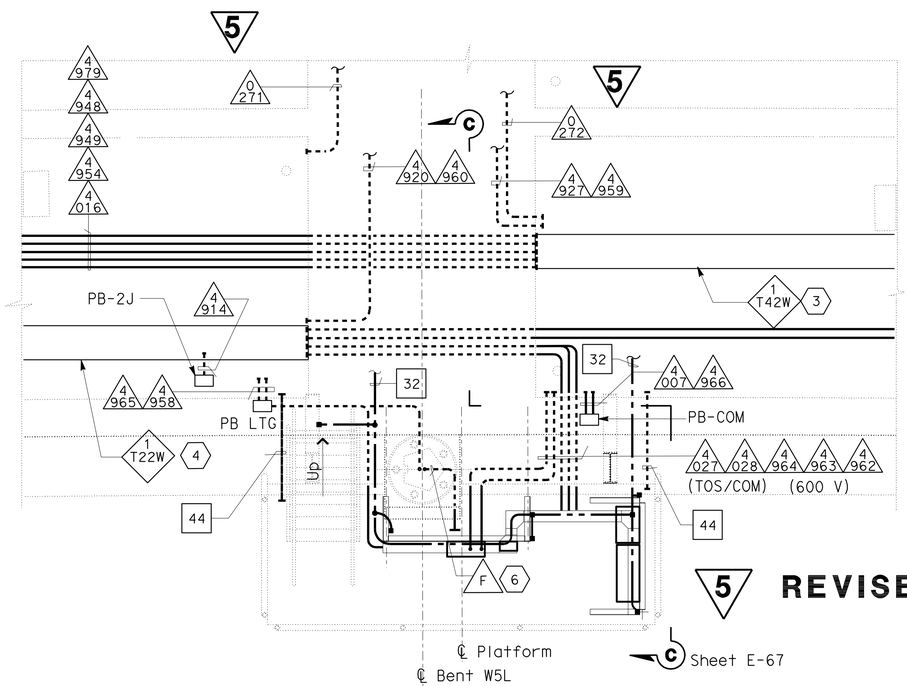

(7) CONDUIT AND GROUNDING PLAN - WB

SCALE: 1:40

SHEET NOTES:

(1) The Contractor to locate to suit site conditions.

(2) Equipment dimensions and sizes shown shall be verified by the Contractor prior to installation.

(3) Install 610 mm solid bottom tray with cover for routing TOS/COM cables.

(4) Install 610 mm ladder type tray for routing 600 V rated cable.

(5) Install pull irons in all vaults, cast in each end wall.

(6) Install 41 mm (F) conduit from Platform 2W to pole 1023-1. For future CCTV (C#15).

(7) For conduit routing in electrical vault and TOS/COM vault, see sheet E-82.

(8) Connect to transformer neutral. See panel schedule.

NOTES:

1. For pull box schedule, refer to sheet E-69.
2. Conduit openings and locations through diaphragm, refer to structures sheets.
3. For details of embedd steel plates, refer to AS sheets.
4. Ground conductor routed outside or exposed shall be green insulated.
5. Conduits terminating inside vaults shall be provided with ground insulated bushing connected to ground bar.

EQUIPMENT SCHEDULE: (2)

(A) Utility Panel UP-102
208/120 V, 3 Phase, 4 Wires (PB-8A).

(A1) 15 kVA Transformer, 3 Phase, 4 Wires
480 V-208/120 V, 60 Hz. (Nema 4X)
Size: 375 H x 485 W x 311 D.

(A2) Enclosed molded case circuit breaker
(for UP-102) Size: 495 H x 485 W x 311 D.

(B) Telephone Terminal Box #TEL-02W (PB-7C).

(C) 600 V Wireway #1W, (Nema 4X) 152 H x 152 W.

MISCELLANEOUS

(D) Deck utility access opening and cover.
Engraving "ELECTRICAL VAULT 2W".
Refer to Structures plan sheets,
miscellaneous supersructure details
No. 2.

(E) Deck utility access opening and cover.
Engraving "TOS/COM 2W". Refer to
Structures plan sheet, miscellaneous
superstructure details No. 2.

(5) **REVISED PER ADDENDUM No. 5 DATED JULY 30, 2009**

DETAILS

YBI TRANSITION STRUCTURES ROADWAY WESTBOUND (PLATFORM 2W ARRANGEMENT AND PLAN)

SCALE AS NOTED

E-65

THIS PLAN IS ACCURATE FOR ELECTRICAL WORK ONLY.

ALL DIMENSIONS ARE IN MILLIMETERS UNLESS OTHERWISE SHOWN

STATE OF CALIFORNIA - DEPARTMENT OF TRANSPORTATION
Caltrans

CONSULTANT FUNCTIONAL SUPERVISOR: BEHZAD GOLEMOHAMMADI
CALCULATED-DESIGNED BY: FK
CHECKED BY: AB
REVISED BY
DATE REVISED

LAST REVISION 00-00-00
DATE PLOTTED => 28-JUL-2009
TIME PLOTTED => 06:19

Dist	COUNTY	ROUTE	KILOMETER POST TOTAL PROJECT	SHEET No.	TOTAL SHEETS
04	SF	80	12.7/13.2	185	806

REGISTERED ELECTRICAL ENGINEER 2/14/08

6-23-08
PLANS APPROVAL DATE

REGISTERED PROFESSIONAL ENGINEER FADI WALIEDDINE No. 11465 Exp. 12/31/09 ELECTRICAL STATE OF CALIFORNIA

THE STATE OF CALIFORNIA OR ITS OFFICERS OR AGENTS SHALL NOT BE RESPONSIBLE FOR THE ACCURACY OR COMPLETENESS OF ELECTRONIC COPIES OF THIS PLAN SHEET.

PB AMERICAS, Inc.
A Parsons Brinckerhoff Company
303 Second St., Suite 700N
San Francisco, CA 94107-1317

Caltrans Metric

SHEET NOTES:

1. The Contractor to locate to suit site conditions.
2. Equipment dimensions and sizes shown shall be verified by the Contractor prior to installation.
3. For conduit routing in electrical vault and TOS/COM vault see Sheet E-83.
4. Install 610 mm solid bottom tray with cover for routing TOS/COM cables.
5. Install 610 mm ladder type tray for routing 600 V rated cables.
6. Install pull irons in all vaults, cast in each end wall.
7. Install 41 mm (F) conduit from Platform 3W to Pole 1023-3 for future CCTV (C#16).
8. Connect to transformer neutral. See panel schedule.

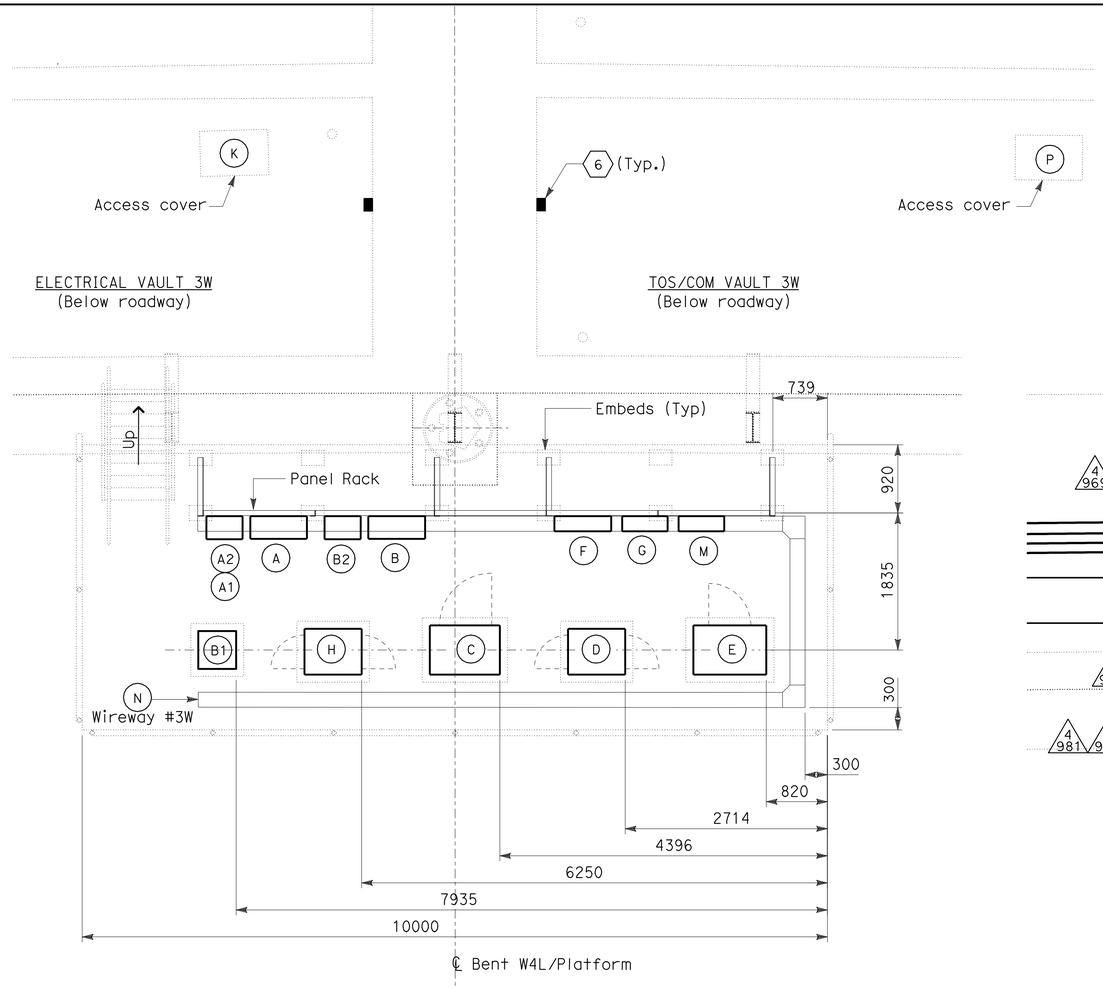

SERVICE PLATFORM #3W EQUIPMENT ARRANGEMENT PLAN (2)

SCALE: 1:40

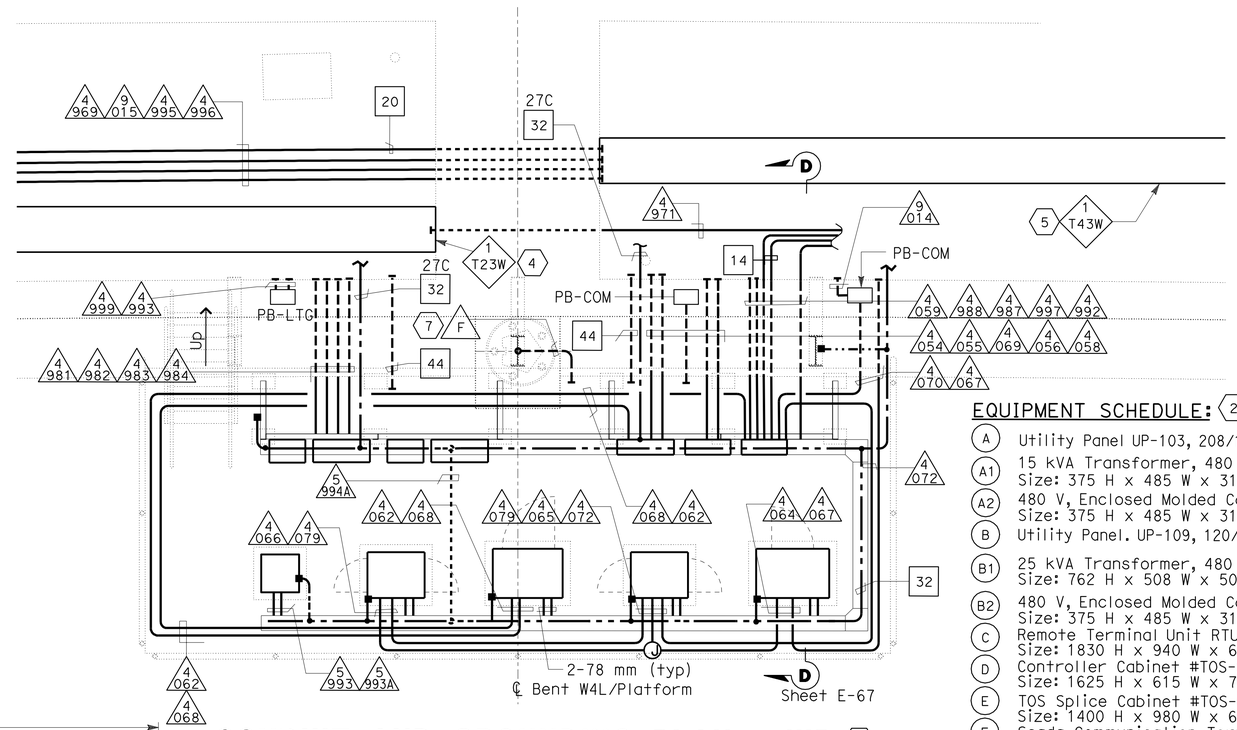

CONDUIT AND GROUNDING PLAN - WB (3)

SCALE: 1:40

EQUIPMENT SCHEDULE: (2)

- (A) Utility Panel UP-103, 208/120 V, (PB-8A).
- (A1) 15 kVA Transformer, 480 V (Nema 4X) Size: 375 H x 485 W x 311 D.
- (A2) 480 V, Enclosed Molded Case Ckt. Bkr. Size: 375 H x 485 W x 311 D.
- (B) Utility Panel. UP-109, 120/240 V (PB-8A).
- (B1) 25 kVA Transformer, 480 V (Nema 4X) Size: 762 H x 508 W x 508 D.
- (B2) 480 V, Enclosed Molded Case Ckt. Bkr. Size: 375 H x 485 W x 311 D.
- (C) Remote Terminal Unit RTU #09W Size: 1830 H x 940 W x 610 D.
- (D) Controller Cabinet #TOS-03WA Size: 1625 H x 615 W x 768 D.
- (E) TOS Splice Cabinet #TOS-03WS Size: 1400 H x 980 W x 660 D.
- (F) Scada Communication Terminal Box #COM-03W (PB-7B).
- (G) Telephone Terminal Box #TEL-03W (PB-7C).
- (H) Controller Cabinet #TOS-03WB Size: 1625 H x 615 W x 768 D.
- (M) PB-2B Mounted on panel rack.
- (N) 600 V, Wireway #3W (Nema 4X) 203 H x 203 W.

MISCELLANEOUS

- (K) Deck Utility access opening and cover. Engraving "ELECTRICAL VAULT 3W". Refer to structures plan sheets, miscellaneous superstructure details No. 2.
- (P) Deck Utility access opening and cover. Engraving "TOS/COM VAULT 3W". Refer to structures plan sheets, miscellaneous superstructure details No. 2.

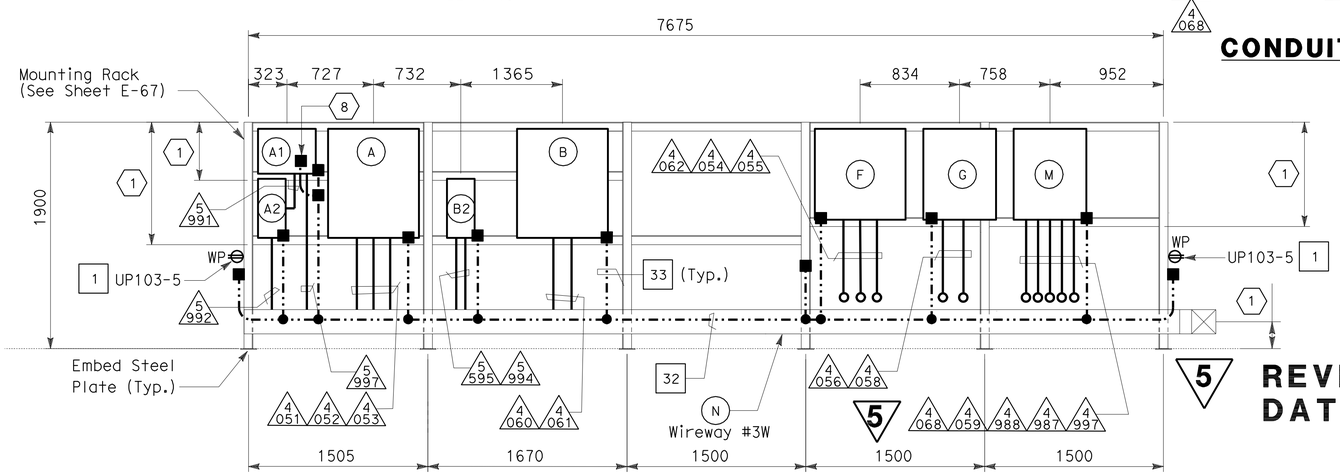

PANEL RACK - ELEVATION

SCALE: 1:25

NOTES:

1. For pull box schedule, refer to sheet E-69.
2. Conduit openings and locations through diaphragm, refer to structures sheets.
3. For details of embedd steel plates, refer to AS sheets.
4. Ground conductor routed outside or exposed shall be green insulated.
5. Conduits terminating inside vaults shall be provided with ground insulated bushing connected to ground bar.

5 **REVISED PER ADDENDUM No. 5 DATED JULY 30, 2009**

DETAILS

YBI TRANSITION STRUCTURES ROADWAY WESTBOUND (PLATFORM 3W ARRANGEMENT AND PLAN)

SCALE AS NOTED

E-66

THIS PLAN IS ACCURATE FOR ELECTRICAL WORK ONLY.

ALL DIMENSIONS ARE IN MILLIMETERS UNLESS OTHERWISE SHOWN

STATE OF CALIFORNIA - DEPARTMENT OF TRANSPORTATION
Caltrans

CONSULTANT FUNCTIONAL SUPERVISOR: BEHZAD GOLEMOHAMMADI
CALCULATED-DESIGNED BY
CHECKED BY
REVISED BY: FK
DATE REVISED: AB

LAST REVISION 00-00-00
DATE PLOTTED => 28-JUL-2009
TIME PLOTTED => 06:20

Dist	COUNTY	ROUTE	KILOMETER POST TOTAL PROJECT	SHEET No.	TOTAL SHEETS
04	SF	80	12.7/13.2	187	806

REGISTERED ELECTRICAL ENGINEER 2/14/08

6-23-08
PLANS APPROVAL DATE

REGISTERED PROFESSIONAL ENGINEER FADI WALIEDDINE No. 11465 Exp. 12/31/09 ELECTRICAL STATE OF CALIFORNIA

THE STATE OF CALIFORNIA OR ITS OFFICERS OR AGENTS SHALL NOT BE RESPONSIBLE FOR THE ACCURACY OR COMPLETENESS OF ELECTRONIC COPIES OF THIS PLAN SHEET.

PB AMERICAS, Inc.
A Parsons Brinckerhoff Company
303 Second St., Suite 700N
San Francisco, CA 94107-1317

Caltrans Metric

ROADWAY LIGHT POLE AND FIXTURE SCHEDULE (2)

Circuit Number	Pole Number	Location: Station	Location: Roadway side	Mounting Height (m)	LTG Fixture Type	Number/ Wattage	Remarks (Mounting Provisions)
S-1001	1001-1	Bent W41	North	7	HID Metal Halide	1-175 W	Pole mounted
S-1001	1001-2	50+59.0	North	7	HID Metal Halide	1-175 W	Pole mounted (1)
S-1001	1001-3	50+74.1	North	7	HID Metal Halide	1-175 W	Pole mounted
S-1001	1001-4	50+89.1	North	7	HID Metal Halide	1-175 W	Pole mounted
S-1001	1001-5	51+4.1	North	7	HID Metal Halide	1-175 W	Pole mounted
S-1001	1001-6	51+19.1	North	7	HID Metal Halide	1-175 W	Pole mounted
S-1001	1001-7	Bent W10AL	North	7	YSR-3A-P	1-250 W	Pole mounted
S-1001	1001-8	51+44.6	North	7	YSR-3A-P	1-250 W	Pole mounted
S-1001	1001-9	Bent W10L	North	7	YSR-3A-P	1-250 W	Pole mounted
S-1001	1001-10	51+69.3	North	7	YSR-3A-P	1-250 W	Pole mounted
S-1001	1001-11	Bent W9L	North	7	YSR-3A-P	1-250 W	Pole mounted
S-1001	1001-12	51+98.6	North	7	YSR-3A-P	1-250 W	Pole mounted
S-1001	1001-13	Bent W39	North	7	HID Metal Halide	1-175 W	Pole mounted
S-1001	1001-14	50+05	North	7	HID Metal Halide	1-175 W	Pole mounted
S-1001	1001-15	Bent W34	North	7	HID Metal Halide	1-175 W	Pole mounted
S-1001	1001-16	Bent W32	North	7	HID Metal Halide	1-175 W	Pole mounted
S-1002	1002-1	Bent W8L	North	7	YSR-3A-P	1-250 W	Pole mounted
S-1002	1002-2	52+32.8	North	7	YSR-3A-P	1-250 W	Pole mounted
S-1002	1002-3	Bent W7L	North	7	YSR-3A-P	1-250 W	Pole mounted
S-1002	1002-4	52+64.6	North	7	YSR-3A-P	1-250 W	Pole mounted
S-1002	1002-5	52+78.9	North	7	YSR-3A-P	1-250 W	Pole mounted
S-1002	1002-6	52+93.5	North	7	YSR-3A-P	1-250 W	Pole mounted
S-1002	1002-7	Bent W6L	North	7	YSR-3A-P	1-250 W	Pole mounted
S-1002	1002-8	53+25.3	North	7	YSR-3A-P	1-250 W	Pole mounted
S-1002	1002-9	53+41.4	North	7	YSR-3A-P	1-250 W	Pole mounted
S-1002	1002-10	53+57.5	North	7	YSR-3A-P	1-250 W	Pole mounted
S-1021	1021-7	Bent W10AL	South	7	YSR-3A-P	1-250 W	Pole mounted
A-1005					YAM	160 W	
S-1021	1021-8	51+42.9	South	7	YSR-3A-P	1-250 W	Pole mounted
A-1005					YAM	160 W	
S-1021	1021-9	Bent W10L	South	7	YSR-3A-P	1-250 W	Pole mounted
A-1005					YAM	160 W	
S-1021	1021-10	51+67	South	7	YSR-3A-P	1-250 W	Pole mounted
A-1005					YAM	160 W	
S-1021	1021-11	Bent W9L	South	7	YSR-3A-P	1-250 W	Pole mounted
A-1005					YAM	160 W	
S-1021	1021-12	51+96.1	South	7	YSR-3A-P	1-250 W	Pole mounted
A-1005					YAM	160 W	
S-1022	1022-1	Bent W8L	South	7	YSR-3A-P	1-250 W	Pole mounted
A-1005					YAM	160 W	
S-1022	1022-2	52+30.3	South	7	YSR-3A-P	1-250 W	Pole mounted
A-1005					YAM	160 W	
S-1022	1022-3	Bent W7L	South	7	YSR-3A-P	1-250 W	Pole mounted
A-1005					YAM	160 W	
S-1022	1022-4	52+64.6	South	7	YSR-3A-P	1-250 W	Pole mounted
A-1005					YAM	160 W	
S-1022	1022-5	52+78.8	South	7	YSR-3A-P	1-250 W	Pole mounted
A-1005					YAM	160 W	
S-1022	1022-6	52+93.5	South	7	YSR-3A-P	1-250 W	Pole mounted
A-1005					YAM	160 W	
S-1022	1022-7	Bent W6L	South	7	YSR-3A-P	1-250 W	Pole mounted
A-1005					YAM	160 W	
S-1022	1022-8	53+25.3	South	7	YSR-3A-P	1-250 W	Pole mounted
A-1005					YAM	160 W	
S-1022	1022-9	53+41.4	South	7	YSR-3A-P	1-250 W	Pole mounted
A-1005					YAM	160 W	
S-1022	1022-10	53+57.5	South	7	YSR-3A-P	1-250 W	Pole mounted
A-1005					YAM	160 W	

Continuation

Circuit Number	Pole Number	Location: Station	Location: Roadway side	Mounting Height (M)	LTG Fixture Type	Number/ Wattage	Remarks (Mounting Provisions)
S-1023	1023-1	Bent W5L	South	12	YSR-2B-L	2-400 W	Pole mounted
					YSR-3-L	1-250 W	
A-1005					YAM	160 W	
S-1023	1023-2	54+06.7	South	12	YSR-2B-L	2-400 W	Pole mounted
					YSR-3-L	1-250 W	
A-1005					YAM	160 W	
S-1023	1023-3	Bent W4L	South	15	YSR-2B-L	2-400 W	Pole mounted
					YSR-3-L	1-250 W	
A-1005					YAM	160 W	
S-1024	1024-1	54+85.6	South	15	YSR-2B-L	2-400 W	Pole mounted
					YSR-3-L	1-250 W	
A-1005					YAM	160 W	
S-1024	1024-2	Bent W3L	South	17.5	YSR-2B-L	2-400 W	Pole mounted
					YSR-3-L	1-250 W	
A-1005					YAM	160 W	
S-1024	1024-3	55+67.2	South	17.5	YSR-2B-L	2-400 W	Pole mounted
					YSR-3-L	1-250 W	
A-1005					YAM	160 W	

NOTES:

1. References:
   - For roadway lighting circuit numbers, see Single Line Diagram E-41.
   - For Roadway Level Plans, see sheets E-48 through E-52.
2. Pole mounted lighting fixtures 12 meters and higher are provided with a lowering device.
3. Marker light type YAM is a low voltage lighting assembly. Wattage indicated is for 12 LED strips. Each LED strip is rated at 13.4 watts for a fixture total of 160.8 watts.

SHEET NOTES:

(1) Remove existing poles and fixtures and replace with new.

(2) The Roadway Lighting Pole assembly is State-furnished.

(5) **REVISED PER ADDENDUM No. 5 DATED JULY 30, 2009**

THIS PLAN ACCURATE FOR ELECTRICAL WORK ONLY.

DETAILS
YBI TRANSITION STRUCTURES ROADWAY WESTBOUND (LIGHT POLE AND FIXTURE SCHEDULE)
NO SCALE

E-68

REVISED BY | DATE REVISED: FK | AB

CALCULATED-DESIGNED BY | CHECKED BY

CONSULTANT FUNCTIONAL SUPERVISOR: BEHZAD GOLEMOHAMADI

STATE OF CALIFORNIA - DEPARTMENT OF TRANSPORTATION
Caltrans

LAST REVISION 00-00-00 | DATE PLOTTED => 28-JUL-2009 | TIME PLOTTED => 06:20

Dist	COUNTY	ROUTE	KILOMETER POST TOTAL PROJECT	SHEET No.	TOTAL SHEETS
04	SF	80	12.7/13.2	189	806

REGISTERED ELECTRICAL ENGINEER 2/14/08

6-23-08
PLANS APPROVAL DATE

REGISTERED PROFESSIONAL ENGINEER FADI WALIEDDINE No. 11465 Exp. 12/31/09 ELECTRICAL STATE OF CALIFORNIA

THE STATE OF CALIFORNIA OR ITS OFFICERS OR AGENTS SHALL NOT BE RESPONSIBLE FOR THE ACCURACY OR COMPLETENESS OF ELECTRONIC COPIES OF THIS PLAN SHEET.

PB AMERICAS, Inc.
A Parsons Brinckerhoff Company
303 Second St., Suite 700N
San Francisco, CA 94107-1317

UTILITY PANEL UP-101 (CKT #1091)

Location: TRANSITION STRUCTURE SERVICE PLATFORM #1W

LOAD DESCRIPTION	LTG	REC	OTH.	CB		CB	LTG	REC	OTH.	LOAD DESCRIPTION
O.H. Sign Control			500	20/1	1 A 2	20/1			50	CB-139A, CB-139B CB-138A, CB-138B
Spare				20/1	3 B 4	20/1				Spare
Recept (2) Service Platform #1W		360		20/1	5 C 6	20/1				
Spare				20/1	7 A 8	20/1				
				20/1	9 B 10	30/1			2000	Controller Cabinet #TOS-01WA
				20/1	11 C 12	20/1				Spare
TOTAL VA	-	360	500				-	-	2050	TOTAL VA

LOAD SUMMARY IN VA (INCLUDES .90 PF)

Lighting (At 100%):
Gen Use (1st 10 kVA at 100% Plus 50% of remainder): 3800

TOTAL kVA: 2.91 kVA

BALANCE (kVA)

Phase A - 0.550
Phase B - 2.000
Phase C - 0.360

VOLTAGE: 208/120 V
PHASE/WIRES: 3-Phase, 4-Wire
BUS RATING: 100 A
MAIN: 60 A
MOUNTING: Surface
K.A.I.C.: 10

UTILITY PANEL UP-102 (CKT #1092)

Location: TRANSITION STRUCTURE SERVICE PLATFORM #2W

LOAD DESCRIPTION	LTG	REC	OTH.	CB		CB	LTG	REC	OTH.	LOAD DESCRIPTION
Spare				20/1	1 A 2	20/1				
Recept (1) Westbound South Barrier		360		20/1	3 B 4	20/1				Spare
Recept (2) Service Platform #2W		360		20/1	5 C 6	20/1				
Spare				20/1	7 A 8	20/1				
				20/1	9 B 10	20/1				
				20/1	11 C 12	20/1				Spare
TOTAL VA	-	720	-				-	-		TOTAL VA

LOAD SUMMARY IN VA (INCLUDES .90 PF)

Lighting (At 100%):
Gen Use (1st 10 kVA at 100% Plus 50% of remainder): 3260

TOTAL kVA: 0.720 kVA

BALANCE (kVA)

Phase A - 0.0
Phase B - 0.360
Phase C - 0.360

VOLTAGE: 208/120 V
PHASE/WIRES: 3-Phase, 4-Wire
BUS RATING: 100 A
MAIN: 60 A
MOUNTING: Surface
K.A.I.C.: 10

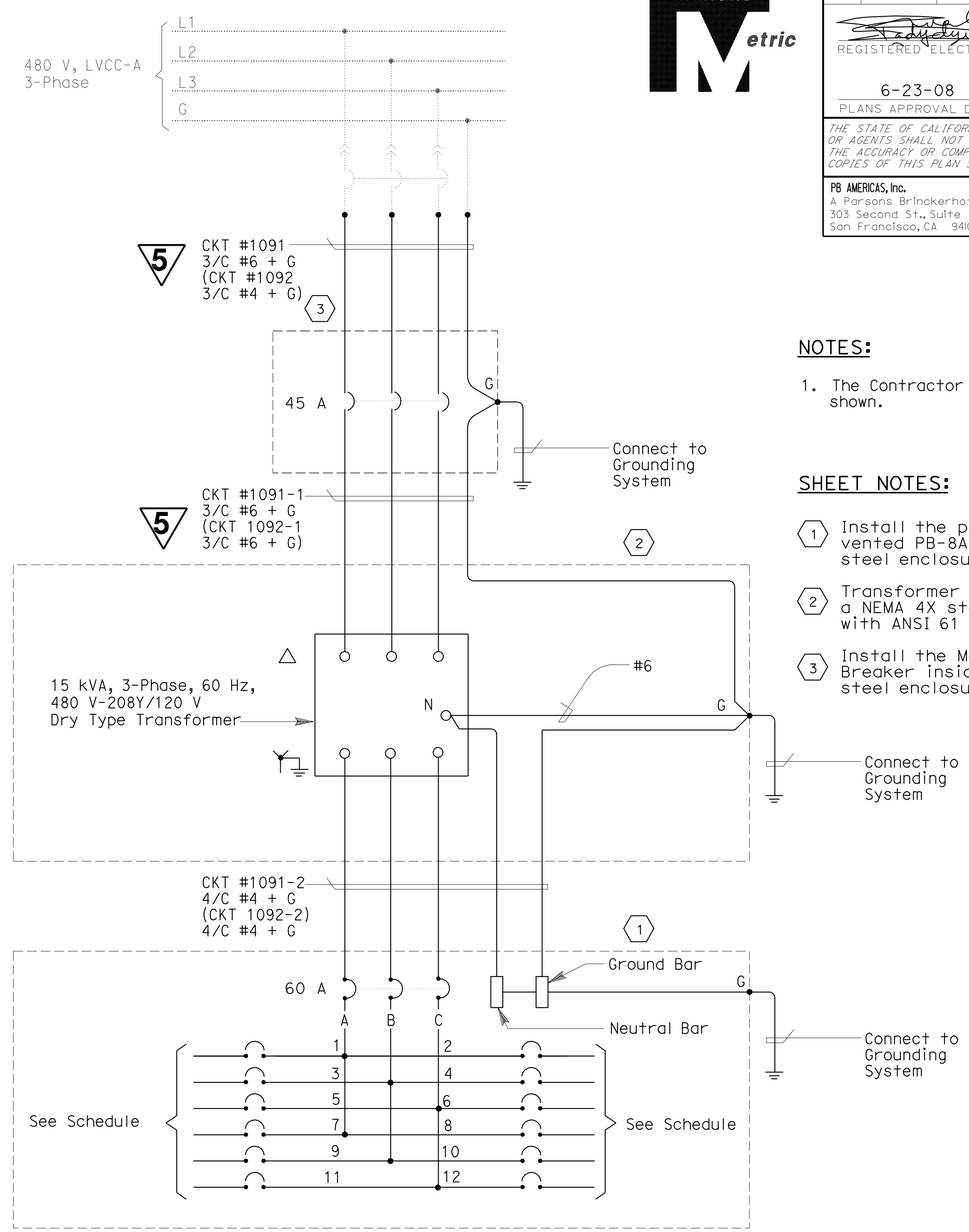

NOTES:

1. The Contractor shall provide nameplates as shown.

SHEET NOTES:

1. Install the panel board inside a vented PB-8A NEMA 4X stainless steel enclosure.
2. Transformer to be furnished with a NEMA 4X stainless steel enclosure with ANSI 61 Power Coat.
3. Install the Molded Case Circuit Breaker inside a NEMA 4X stainless steel enclosure.

DETAILS
YBI TRANSITION STRUCTURES ROADWAY WESTBOUND (PANEL UP-101 AND UP-102 SCHEDULES)

NO SCALE

5 REVISED PER ADDENDUM No. 5 DATED JULY 30, 2009

THIS PLAN ACCURATE FOR ELECTRICAL WORK ONLY.

E-70

STATE OF CALIFORNIA - DEPARTMENT OF TRANSPORTATION
Caltrans

CONSULTANT FUNCTIONAL SUPERVISOR: BEHZAD GOLEMOHAMMADI
CALCULATED-DESIGNED BY: FK
CHECKED BY: AB
REVISED BY / DATE REVISED

LAST REVISION 00-00-00 DATE PLOTTED => 28-JUL-2009 TIME PLOTTED => 06:20

Dist	COUNTY	ROUTE	KILOMETER POST TOTAL PROJECT	SHEET No.	TOTAL SHEETS
04	SF	80	12.7/13.2	190	806

REGISTERED ELECTRICAL ENGINEER 2/14/08

6-23-08
PLANS APPROVAL DATE

REGISTERED PROFESSIONAL ENGINEER FADI WALIEDDINE No. 11465 Exp. 12/31/09 ELECTRICAL STATE OF CALIFORNIA

THE STATE OF CALIFORNIA OR ITS OFFICERS OR AGENTS SHALL NOT BE RESPONSIBLE FOR THE ACCURACY OR COMPLETENESS OF ELECTRONIC COPIES OF THIS PLAN SHEET.

PB AMERICAS, Inc.
A Parsons Brinckerhoff Company
303 Second St., Suite 700N
San Francisco, CA 94107-1317

UTILITY PANEL UP-103 (CKT #1093)

Location: TRANSITION STRUCTURE SERVICE PLATFORM #3W

LOAD DESCRIPTION	LTG	REC	OTH.	CB		CB	LTG	REC	OTH.	LOAD DESCRIPTION
Spare				20/1	1 A 2	20/1			50	CB-140A CB-140B
Recept (5) Westbound South Barrier		720		20/1	3 B 4	20/1				
Recept (2) Service Platform #3W		360		20/1	5 C 6	20/1				Spare
Spare				20/1	7 A 8	20/1				Spare
RTU #9W (PLC Power Supply)			100	20/1	9 B 10	30/1			2000	Controller Cabinet TOS-3WA
RTU #9W (Lighting & Receptacle)	105	180	150	20/1	11 C 12	30/1			2000	Controller Cabinet TOS-3WB
TOTAL VA	105	1260	250						4050	TOTAL VA

LOAD SUMMARY (INCLUDES .90PF) (VA)

Lighting (At 100%): 105
Gen Use (1st 10kVA At 100% Plus 50% OF Remainder): 2150

TOTAL kVA: 5.665

BALANCE (kVA)

Phase A - 0.050
Phase B - 2.820
Phase C - 2.795

VOLTAGE: 208/120 V
PHASE/WIRES: 3-Phase, 4-Wire
BUS RATING: 100 A
MAIN: 60 A
MOUNTING: Surface
K.A.I.C.: 10

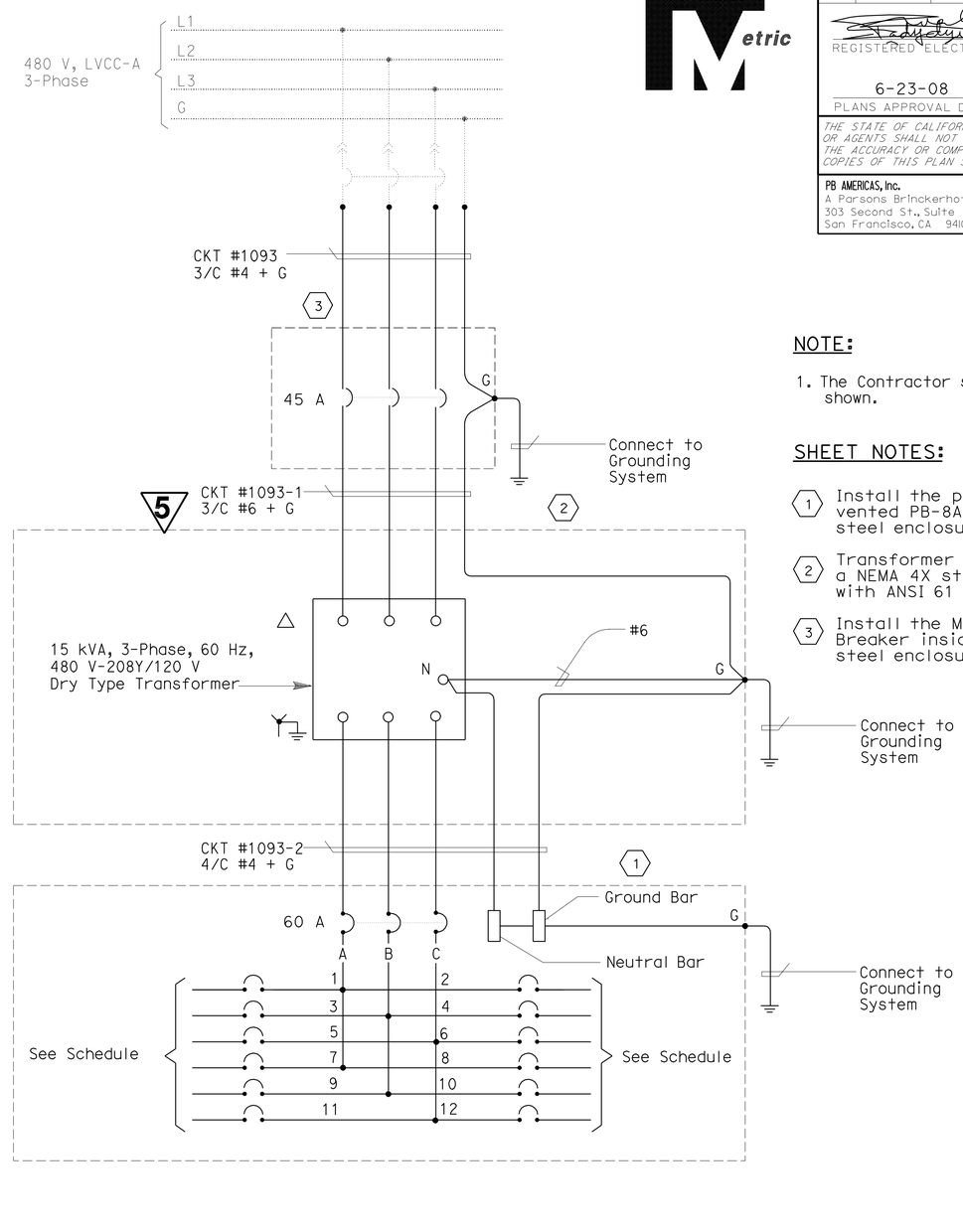

NOTE:

1. The Contractor shall provide nameplates as shown.

SHEET NOTES:

1. Install the panel board inside a vented PB-8A NEMA 4X stainless steel enclosure.
2. Transformer to be furnished with a NEMA 4X stainless steel enclosure with ANSI 61 Power Coat.
3. Install the Molded Case Circuit Breaker inside a NEMA 4X stainless steel enclosure.

DETAILS
YBI TRANSITION STRUCTURES ROADWAY WESTBOUND (PANEL UP-103 SCHEDULE)

5 REVISED PER ADDENDUM No. 5 DATED JULY 30, 2009

THIS PLAN ACCURATE FOR ELECTRICAL WORK ONLY.

E-71

REVISED BY | DATE REVISED
FK | AB
CALCULATED-DESIGNED BY | CHECKED BY
CONSULTANT FUNCTIONAL SUPERVISOR
BEHZAD GOLEMOHAMMADI
STATE OF CALIFORNIA - DEPARTMENT OF TRANSPORTATION
Caltrans

LAST REVISION 00-00-00 | DATE PLOTTED => 28-JUL-2009 | TIME PLOTTED => 06:21

Dist	COUNTY	ROUTE	KILOMETER POST TOTAL PROJECT	SHEET No.	TOTAL SHEETS
04	SF	80	12.7/13.2	192	806

REGISTERED ELECTRICAL ENGINEER 2/14/08

6-23-08
PLANS APPROVAL DATE

REGISTERED PROFESSIONAL ENGINEER FADI WALIEDDINE No. 11465 Exp. 12/31/09 ELECTRICAL STATE OF CALIFORNIA

THE STATE OF CALIFORNIA OR ITS OFFICERS OR AGENTS SHALL NOT BE RESPONSIBLE FOR THE ACCURACY OR COMPLETENESS OF ELECTRONIC COPIES OF THIS PLAN SHEET.

PB AMERICAS, Inc.
A Parsons Brinckerhoff Company
303 Second St., Suite 700N
San Francisco, CA 94107-1317

Caltrans Metric

NOTES:

1. References:
   - For pull box mounting details, see sheet E-86.
   - For pull box schedules, see sheet E-69.
   - TOS equipment it shown for conduit routing only. For typical details of TOS controllers and devices, see sheets E-146 through E-157.
   - For lighting circuit and wiring diagram, see sheet E-57.
   - For light pipe schedule, see sheet E-84.
   - For 480 V light pipe wiring diagram, see sheet E-77A.
2. For fixture schedules, see sheet E-110.
3. For other related work not shown, see Electrical Special Provisions.

SHEET NOTES:

1. Conduit up to PB-LTG located in barrier.
2. Conduit up to PB-COM located in barrier.
3. Support and install lighting conduit flush on girder floor.
4. For soffit light fixture and No. 7 ceiling pull box mounting, see Caltrans Standard ES-9E, Detail F.
5. Conduit up to barrier PB-LTG for future light pipe. Provide cap at bottom end of conduit, see Section C-C sheet E-63.
6. Provide cap at bottom end of conduit, see Section C-C, sheet E-63.

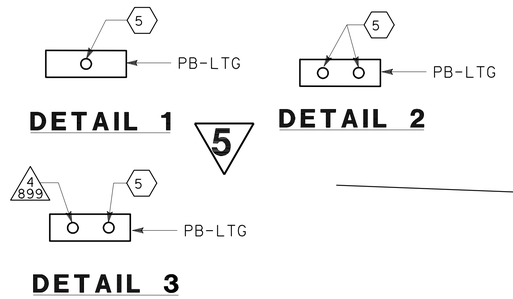

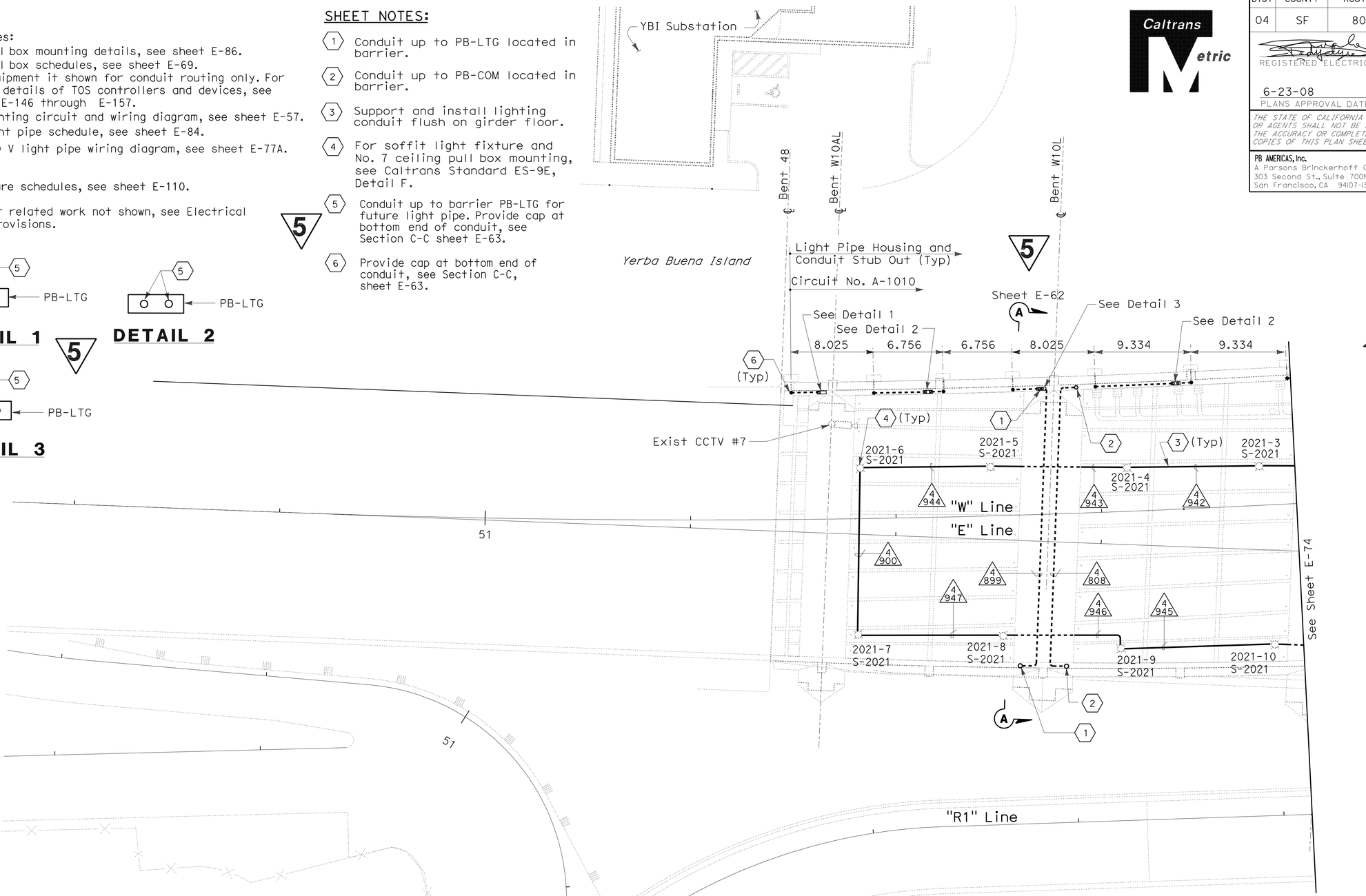

5 **REVISED PER ADDENDUM No. 5 DATED JULY 30, 2009**

YBI TRANSITION STRUCTURES GIRDER WESTBOUND
(LIGHTING AND ELECTRICAL SYSTEMS)

SCALE: 1:200

CONDUIT PLAN

THIS PLAN IS ACCURATE FOR ELECTRICAL WORK ONLY.

ALL DIMENSIONS ARE IN METERS UNLESS OTHERWISE SHOWN

E-73

REVISED BY	DATE REVISED
FK	AB

CALCULATED-DESIGNED BY
CHECKED BY

CONSULTANT FUNCTIONAL SUPERVISOR
BEHZAD GOLEMOHAMMADI

STATE OF CALIFORNIA - DEPARTMENT OF TRANSPORTATION
Caltrans

LAST REVISION 00-00-00
DATE PLOTTED => 28-JUL-2009
TIME PLOTTED => 06:21

Dist	COUNTY	ROUTE	KILOMETER POST TOTAL PROJECT	SHEET No.	TOTAL SHEETS
04	SF	80	12.7/13.2	193	806

REGISTERED ELECTRICAL ENGINEER 2/14/08

6-23-08
PLANS APPROVAL DATE

REGISTERED PROFESSIONAL ENGINEER FADI WALIEDDINE No. 11465 Exp. 12/31/09 ELECTRICAL STATE OF CALIFORNIA

THE STATE OF CALIFORNIA OR ITS OFFICERS OR AGENTS SHALL NOT BE RESPONSIBLE FOR THE ACCURACY OR COMPLETENESS OF ELECTRONIC COPIES OF THIS PLAN SHEET.

PB AMERICAS, Inc.
A Parsons Brinckerhoff Company
303 Second St., Suite 700N
San Francisco, CA 94107-1317

Caltrans Metric

5

NOTES:

1. References:
   - For pull box mounting details, see sheet E-86.
   - For conduit support locations, see sheets E-87 through E-89.
   - For pull box schedules, see sheet E-69.
   - TOS equipment it shown for conduit routing only. For typical details of TOS controllers and devices, see sheets E-146 through E-157.
   - For lighting circuit and wiring diagram, see sheet E-57.
   - For light pipe schedule, see sheet E-84.
   - For 480 V light pipe wiring diagram, see sheet E-77 & E-77A.
2. For fixture schedule, see sheet E-110.
3. For other related work not shown, see Electrical Special Provisions.

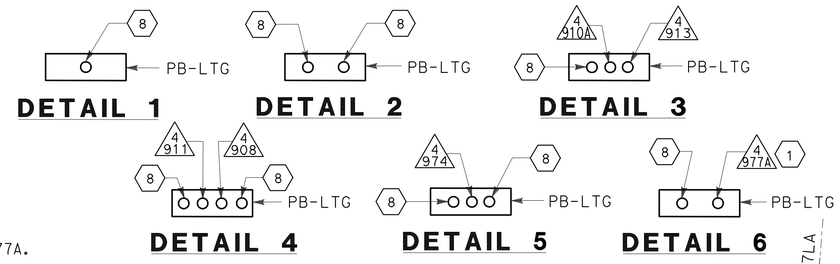

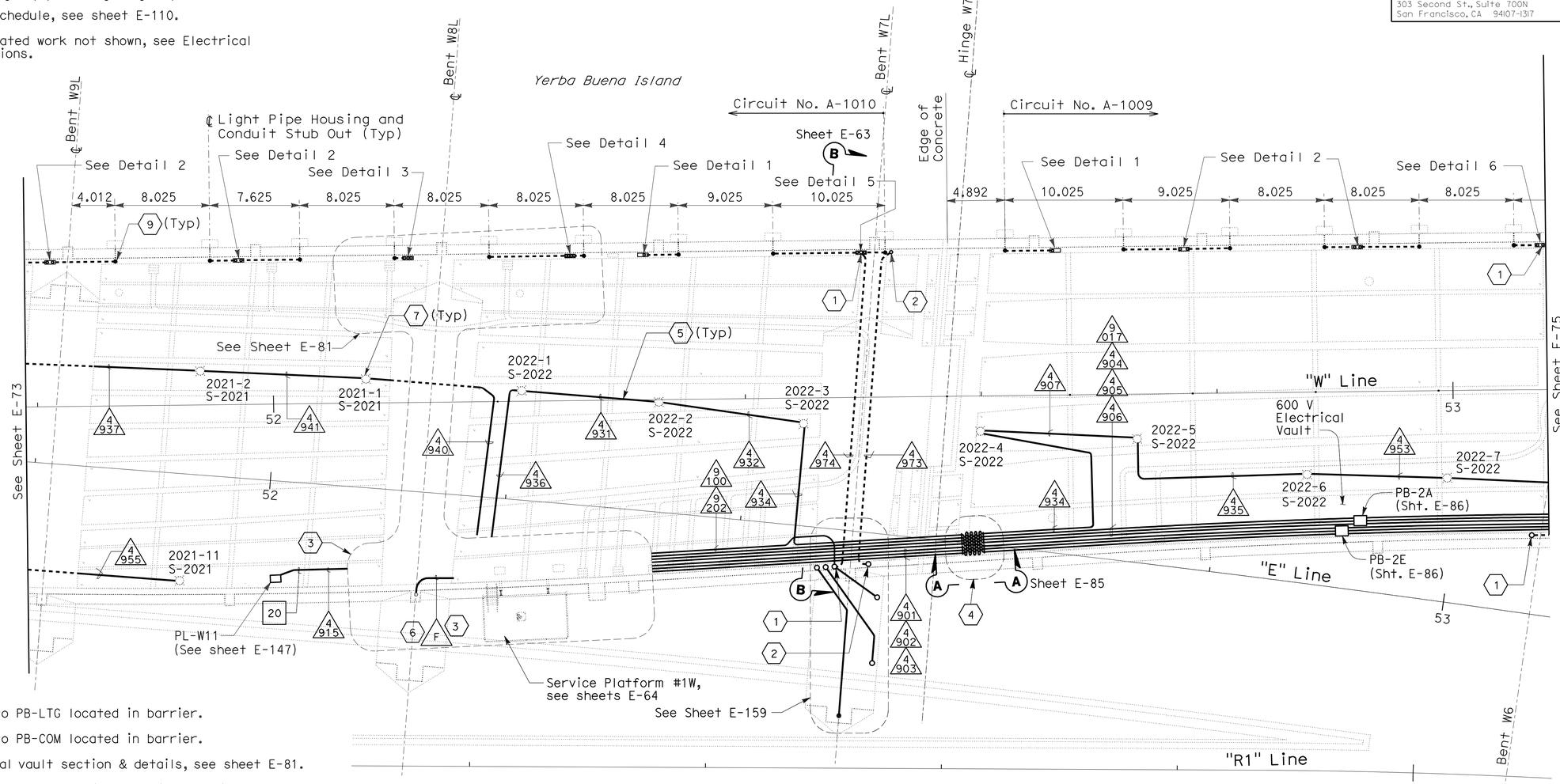

CONDUIT PLAN

SHEET NOTES:

1. Conduit up to PB-LTG located in barrier.
2. Conduit up to PB-COM located in barrier.
3. For electrical vault section & details, see sheet E-81.
4. Deck access manhole required for installation of cable.
5. Support and install lighting conduit flush on girder floor.
6. Install 41 mm (F) conduit from 600 V vault in IW to Pole 1022-1. Required for future camera #14 (By others).
7. For soffit light fixture and No. 7 ceiling pull box mounting, see Caltrans Standard ES-9E, Detail F.
8. Conduit up to barrier PB-LTG for future light pipe. Provide cap at bottom end of conduit. See Section C-C sheet E-63.
9. Provide cap at bottom end of conduit. See Section C-C sheet E-63.

5 REVISED PER ADDENDUM No. 5 DATED JULY 30, 2009

YBI TRANSITION STRUCTURES GIRDER WESTBOUND
(LIGHTING AND ELECTRICAL SYSTEMS)

SCALE: 1:200

THIS PLAN IS ACCURATE FOR ELECTRICAL WORK ONLY.

ALL DIMENSIONS ARE IN METERS UNLESS OTHERWISE SHOWN

E-74

REVISED BY	DATE REVISED	CALCULATED-DESIGNED BY	CHECKED BY	CONSULTANT FUNCTIONAL SUPERVISOR
FK	AB			BEHZAD GOLEMOHAMMADI

STATE OF CALIFORNIA - DEPARTMENT OF TRANSPORTATION

Caltrans

LAST REVISION 00-00-00 | DATE PLOTTED => 28-JUL-2009 | TIME PLOTTED => 06:21

Dist	COUNTY	ROUTE	KILOMETER POST TOTAL PROJECT	SHEET No.	TOTAL SHEETS
04	SF	80	12.7/13.2	194	806

REGISTERED ELECTRICAL ENGINEER 2/14/08

6-23-08
PLANS APPROVAL DATE

REGISTERED PROFESSIONAL ENGINEER FADI WALIEDDINE No. 11465 Exp. 12/31/09 ELECTRICAL STATE OF CALIFORNIA

THE STATE OF CALIFORNIA OR ITS OFFICERS OR AGENTS SHALL NOT BE RESPONSIBLE FOR THE ACCURACY OR COMPLETENESS OF ELECTRONIC COPIES OF THIS PLAN SHEET.

PB AMERICAS, Inc.
A Parsons Brinckerhoff Company
303 Second St., Suite 700N
San Francisco, CA 94107-1317

Caltrans Metric

5

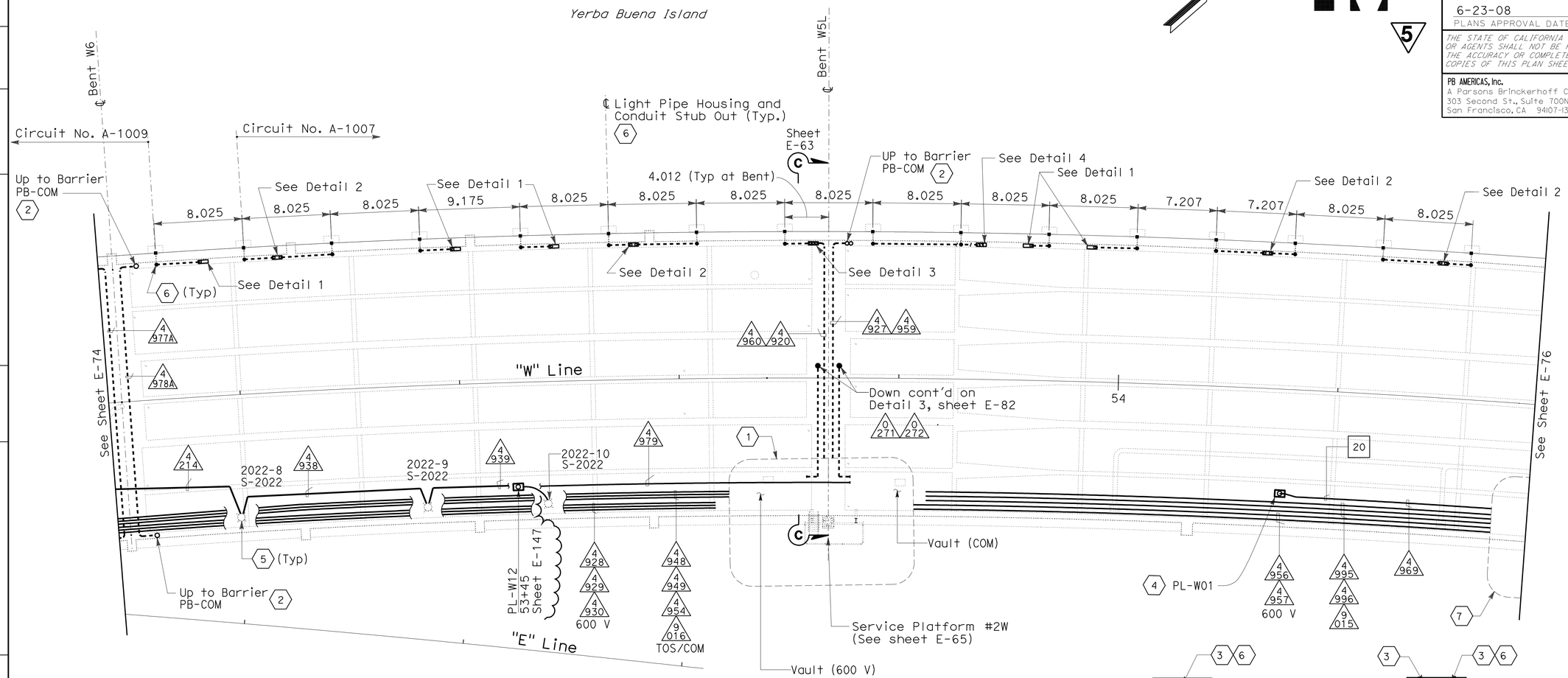

CONDUIT PLAN

SHEET NOTES:

1. For vault section & details, see sheet E-82.
2. Conduit up Barrier PB-LTG and PB-COM.
3. Conduit up to barrier PB-LTG for future light pipe. Provide cap at bottom end of conduit, see Section C-C sheet E-63.
4. For traffic operations system preformed loop detector station installation, see sheet E-147.
5. For soffit light fixture and No. 7 ceiling pull box mounting, see Caltrans Standard ES-9E, Detail F.
6. Provide cap at bottom end of conduit, see Section C-C, sheet E-63.
7. For electrical vault section & details see sheet E-83.

THIS PLAN IS ACCURATE FOR ELECTRICAL WORK ONLY.

NOTES:

1. References:
   - For lighting poles, call boxes, outlet boxes and pull boxes schedules, see sheet E-69.
   - Lighting fixture mounted under westbound deck. Conduits routed inside girder box.
   - For service platform plan and details, see sheet E-65.
   - For future light pipe schedule, see sheet E-84.
   - For 480 light pipe wiring diagram, see sheet E-77.
   - For typical detail of conduit & pull box support, see sheet E-86.
2. For fixture schedule, see sheet E-110.

YBI TRANSITION STRUCTURES GIRDER WESTBOUND
(LIGHTING AND ELECTRICAL SYSTEMS)

SCALE: 1:200

5 **REVISED PER ADDENDUM No. 5 DATED JULY 30, 2009**

ALL DIMENSIONS ARE IN METERS UNLESS OTHERWISE SHOWN

E-75

REVISED BY | DATE REVISED
FK | AB
CALCULATED-DESIGNED BY | CHECKED BY
CONSULTANT FUNCTIONAL SUPERVISOR: BEHZAD GOLEMOHAMMADI

STATE OF CALIFORNIA - DEPARTMENT OF TRANSPORTATION
Caltrans

LAST REVISION 00-00-00 | DATE PLOTTED => 28-JUL-2009 | TIME PLOTTED => 06:2

Dist	COUNTY	ROUTE	KILOMETER POST TOTAL PROJECT	SHEET No.	TOTAL SHEETS
04	SF	80	12.7/13.2	195	806

REGISTERED ELECTRICAL ENGINEER 2/14/08

6-23-08
PLANS APPROVAL DATE

REGISTERED PROFESSIONAL ENGINEER FADI WALIEDDINE No. 11465 Exp. 12/31/09 ELECTRICAL STATE OF CALIFORNIA

THE STATE OF CALIFORNIA OR ITS OFFICERS OR AGENTS SHALL NOT BE RESPONSIBLE FOR THE ACCURACY OR COMPLETENESS OF ELECTRONIC COPIES OF THIS PLAN SHEET.

PB AMERICAS, Inc.
A Parsons Brinckerhoff Company
303 Second St., Suite 700N
San Francisco, CA 94107-1317

Caltrans Metric 5

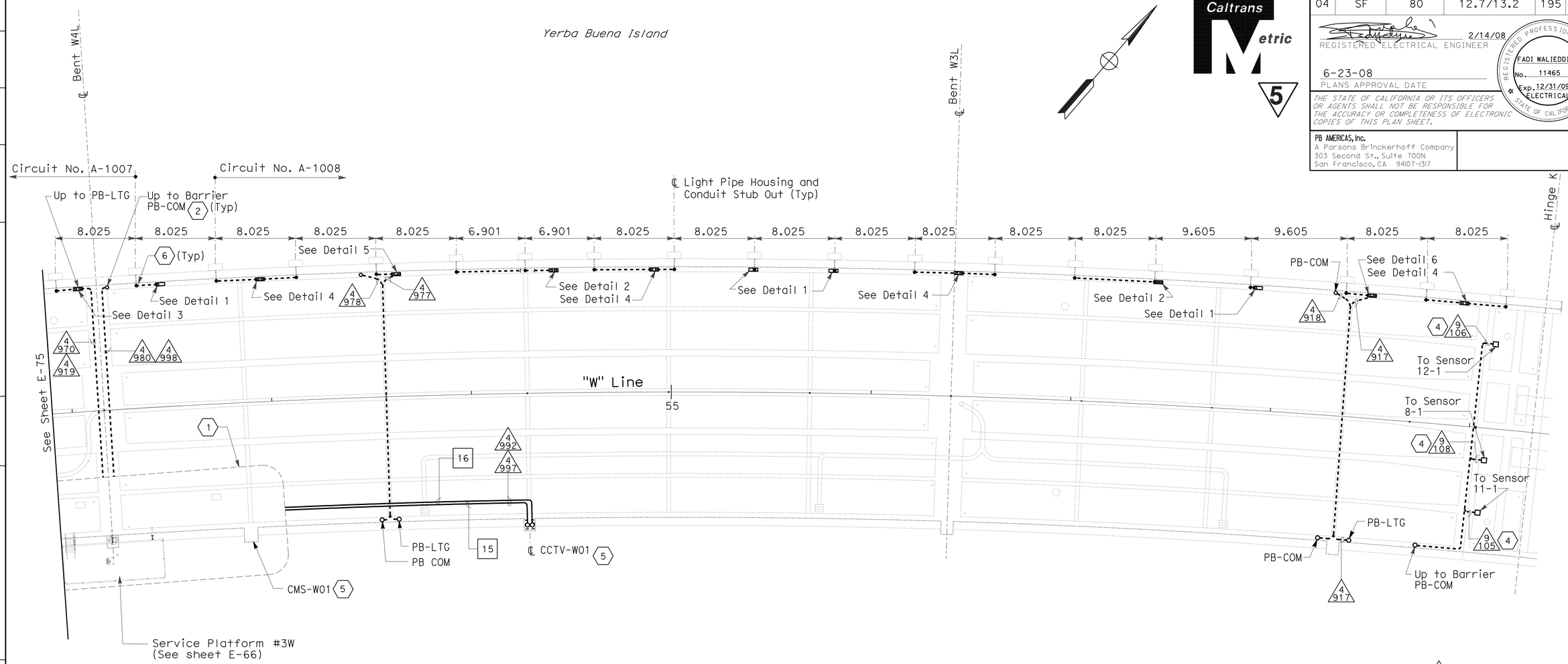

CONDUIT PLAN

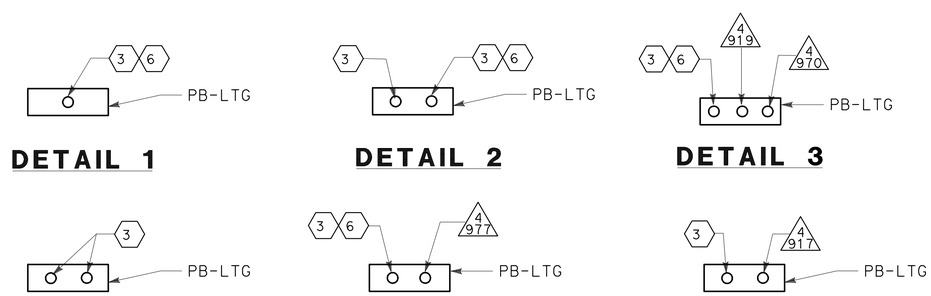

SHEET NOTES:

(1) For electrical vault section & details see sheet E-83.

(2) For conduit up to barrier PB-LTG and PB-COM.

(3) Conduit up to barrier PB-LTG for future light pipe.

(4) Conduits to be installed in this contract but are reserved for SMD.

(5) Conduits up, see Sheet E-59.

(6) Provide cap at bottom end of conduit. See Section C-C, sheet E-63.

NOTES:

1. References:
   - For lighting poles, call boxes, outlet boxes and pull boxes schedules, see sheet E-69.
   - Lighting fixture mounted under westbound deck. Conduits routed inside girder box.
   - For service platform plan and details, see sheet E-66.
   - For future light pipe schedule, see sheet E-84.
   - For 480 light pipe wiring diagram, see sheet E-77.

YBI TRANSITION STRUCTURES GIRDER WESTBOUND
(LIGHTING AND ELECTRICAL SYSTEMS)

SCALE: 1:200

5 **REVISED PER ADDENDUM No. 5 DATED JULY 30, 2009**

THIS PLAN IS ACCURATE FOR ELECTRICAL WORK ONLY.

ALL DIMENSIONS ARE IN METERS UNLESS OTHERWISE SHOWN

E-76

REVISED BY | DATE REVISED
FK | AB
CALCULATED-DESIGNED BY | CHECKED BY
CONSULTANT FUNCTIONAL SUPERVISOR
BEHZAD GOLEMOHAMMADI

STATE OF CALIFORNIA - DEPARTMENT OF TRANSPORTATION
Caltrans

LAST REVISION 00-00-00 | DATE PLOTTED => 28-JUL-2009 | TIME PLOTTED => 06:22

Dist	COUNTY	ROUTE	KILOMETER POST TOTAL PROJECT	SHEET No.	TOTAL SHEETS
04	SF	80	12.7/13.2	196A	806

2/14/08
REGISTERED ELECTRICAL ENGINEER

6-23-08
PLANS APPROVAL DATE

REGISTERED PROFESSIONAL ENGINEER
FADI WALIEDDINE
No. 11465
Exp. 12/31/09
ELECTRICAL
STATE OF CALIFORNIA

THE STATE OF CALIFORNIA OR ITS OFFICERS OR AGENTS SHALL NOT BE RESPONSIBLE FOR THE ACCURACY OR COMPLETENESS OF ELECTRONIC COPIES OF THIS PLAN SHEET.

PB AMERICAS, Inc.
A Parsons Brinckerhoff Company
303 Second St., Suite 700N
San Francisco, CA 94107-1317

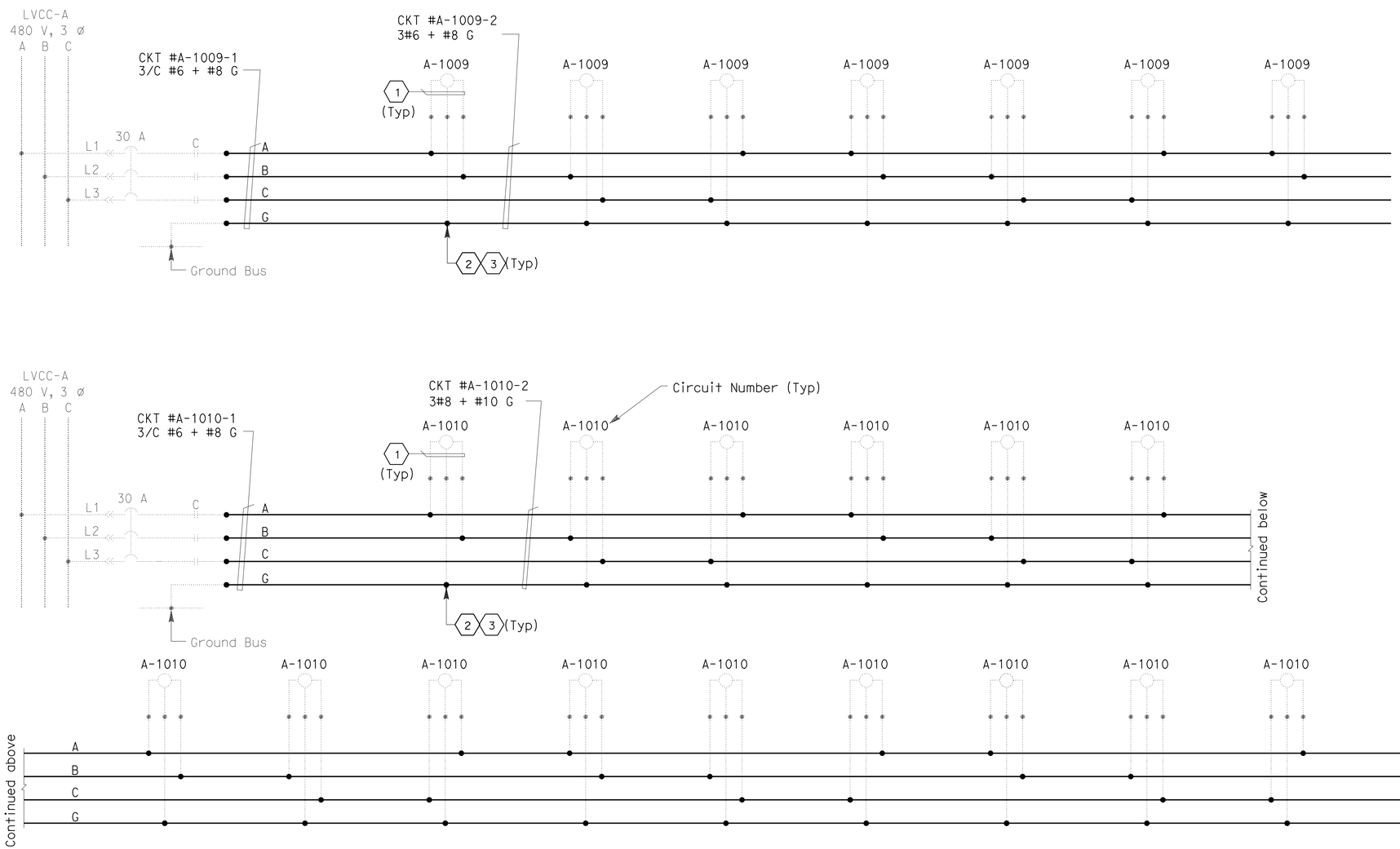

SHEET NOTES:

1. 3#10 AWG single conductors.
2. Conductors spliced in pull box PB-LTG.
3. Future light pipe connections. Coil and tape end of conductors in pull box PB-LTG.

NOTES:

1. References:
   - For LVCC-A single line diagrams, see sheet E-41.
   - For light pipe schedules, see sheet E-84.
   - For typical pull box schedules, see sheet E-69.
   - For locations of future light pipe housing and conduit stub out, see sheets E-75 and E-76.

5 **ADDED PER ADDENDUM No. 5 DATED JULY 30, 2009**

YBI TRANSITION STRUCTURE - WB
480 V LIGHT PIPE WIRING DIAGRAM

DETAILS
YBI STRUCTURE GIRDER WESTBOUND
480 V LIGHT PIPE WIRING DIAGRAM
NO SCALE

E-77A

THIS PLAN ACCURATE FOR ELECTRICAL WORK ONLY.

STATE OF CALIFORNIA - DEPARTMENT OF TRANSPORTATION
Caltrans

CONSULTANT FUNCTIONAL SUPERVISOR: BEHZAD GOLEMOHAMMADI
CALCULATED-DESIGNED BY: FK
CHECKED BY: AB
REVISED BY
DATE REVISED

LAST REVISION 00-00-00
DATE PLOTTED => 28-JUL-2009
TIME PLOTTED => 06:22

Dist	COUNTY	ROUTE	KILOMETER POST TOTAL PROJECT	SHEET No.	TOTAL SHEETS
04	SF	80	12.7/13.2	196	806

REGISTERED ELECTRICAL ENGINEER 2/14/08

6-23-08
PLANS APPROVAL DATE

REGISTERED PROFESSIONAL ENGINEER FADI WALIEDDINE No. 11465 Exp. 12/31/09 ELECTRICAL STATE OF CALIFORNIA

THE STATE OF CALIFORNIA OR ITS OFFICERS OR AGENTS SHALL NOT BE RESPONSIBLE FOR THE ACCURACY OR COMPLETENESS OF ELECTRONIC COPIES OF THIS PLAN SHEET.

PB AMERICAS, Inc.
A Parsons Brinckerhoff Company
303 Second St., Suite 700N
San Francisco, CA 94107-1317

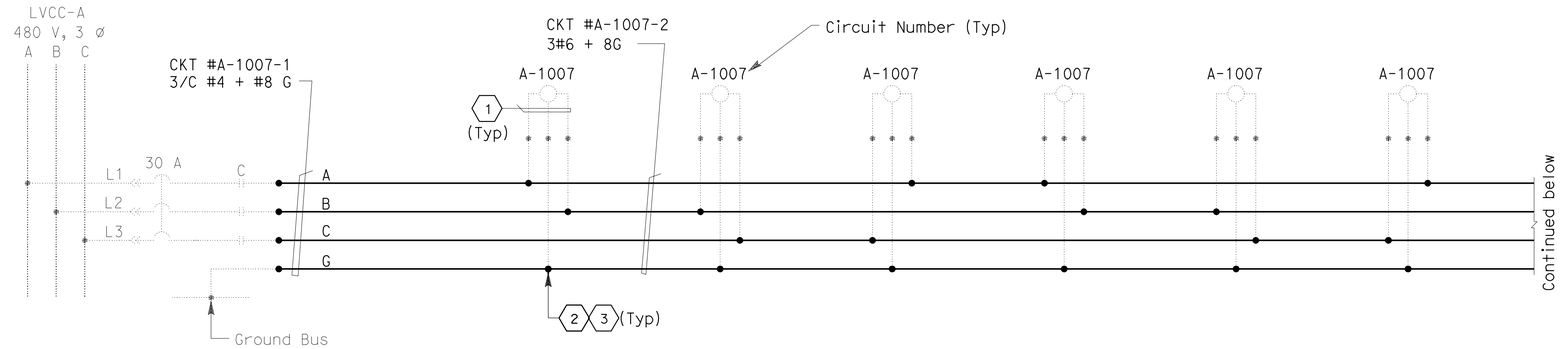

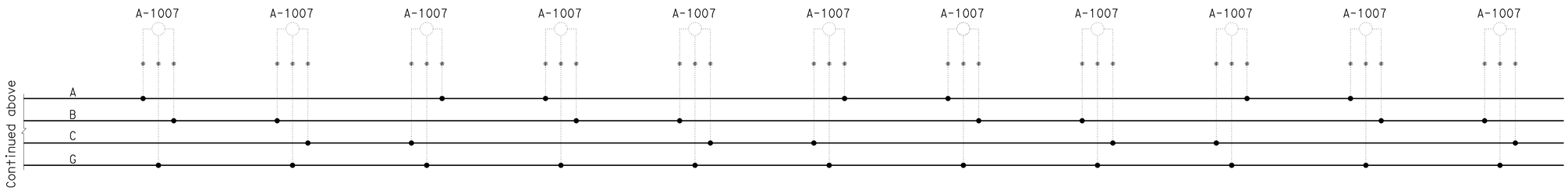

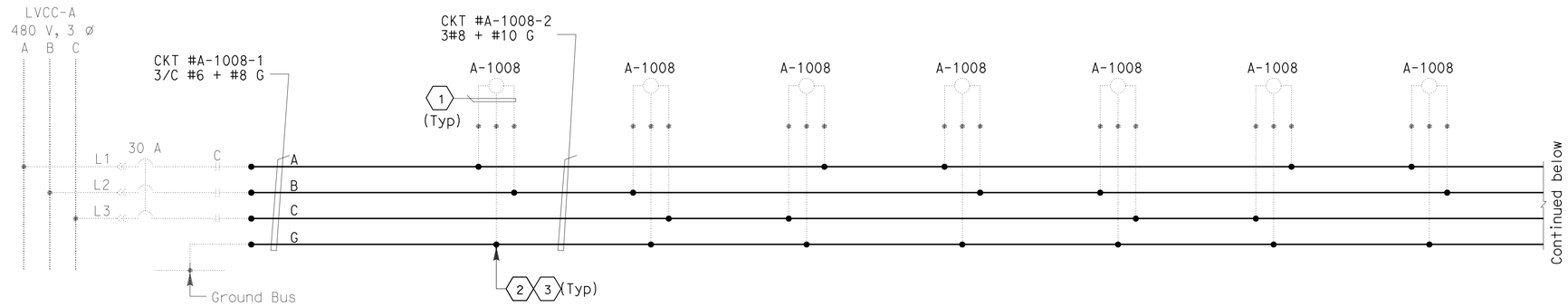

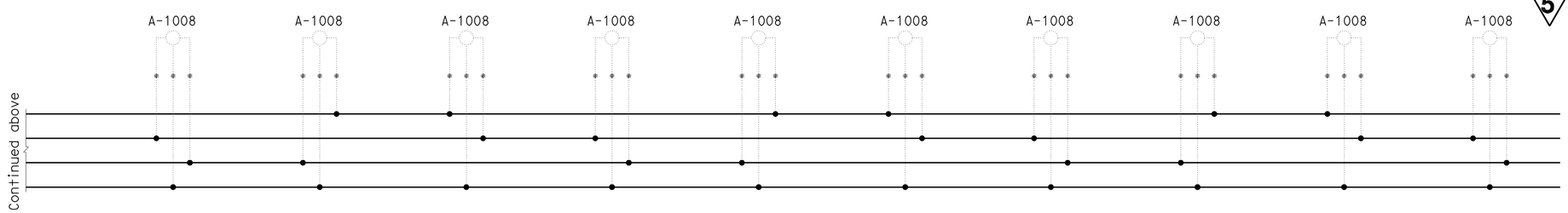

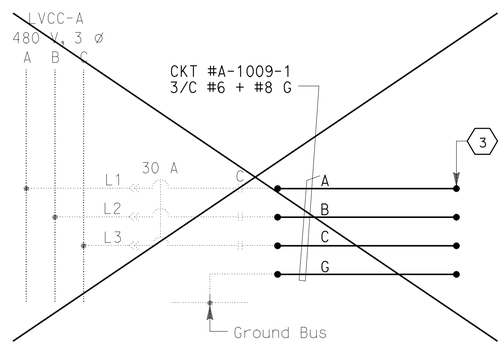

5

SHEET NOTES:

1. 3#10 AWG single conductors.
2. Conductors spliced in pull box PB-LTG.
3. Future light pipe connections. Coil and tape end of conductors in pull box PB-LTG.

NOTES:

1. References:
   - For LVCC-A single line diagrams, see sheet E-41.
   - For light pipe schedules, see sheet E-84.
   - For typical pull box schedules, see sheet E-69.
   - For locations of future light pipe housing and conduit stub out, see sheets E-75 and E-76.

5

5 **REVISED PER ADDENDUM No. 5 DATED JULY 30, 2009**

YBI TRANSITION STRUCTURE - WB
480 V LIGHT PIPE WIRING DIAGRAM

DETAILS
YBI TRANSITION STRUCTURES GIRDER WESTBOUND (480 V LIGHT PIPE WIRING DIAGRAM)
NO SCALE

THIS PLAN ACCURATE FOR ELECTRICAL WORK ONLY.

E-77

STATE OF CALIFORNIA - DEPARTMENT OF TRANSPORTATION
Caltrans

CONSULTANT FUNCTIONAL SUPERVISOR: BEHZAD GOLEMOHAMMADI
CALCULATED-DESIGNED BY: FK
CHECKED BY: AB
REVISED BY
DATE REVISED

LAST REVISION 00-00-00
DATE PLOTTED => 28-JUL-2009
TIME PLOTTED => 06:22

Dist	COUNTY	ROUTE	KILOMETER POST TOTAL PROJECT	SHEET No.	TOTAL SHEETS
04	SF	80	12.7/13.2	197	806

REGISTERED ELECTRICAL ENGINEER — 2/14/08 DATE

6-23-08
PLANS APPROVAL DATE

REGISTERED PROFESSIONAL ENGINEER — FADI WALIEDDINE No. 11465 Exp. 12/31/09 ELECTRICAL — STATE OF CALIFORNIA

THE STATE OF CALIFORNIA OR ITS OFFICERS OR AGENTS SHALL NOT BE RESPONSIBLE FOR THE ACCURACY OR COMPLETENESS OF ELECTRONIC COPIES OF THIS PLAN SHEET.

PB AMERICAS, Inc.
A Parsons Brinckerhoff Company
303 Second St., Suite 700N
San Francisco, CA 94107-1317

Caltrans Metric

5

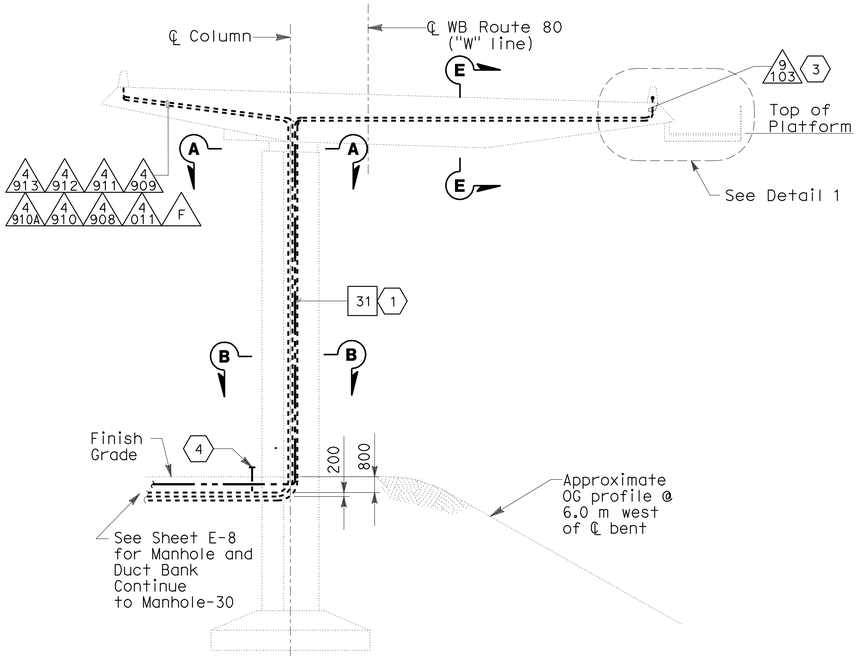

BENT W8L ELEVATION
SCALE: 1:150

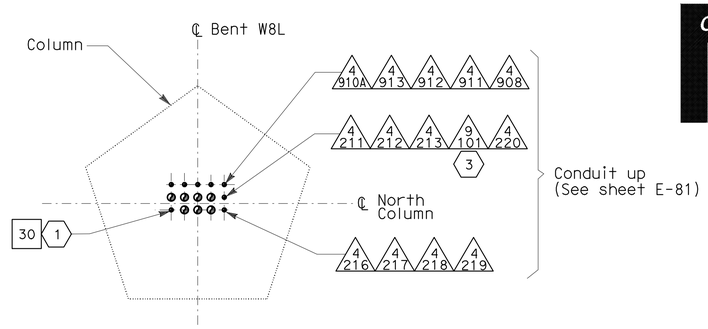

SECTION A-A
SCALE: 1:40

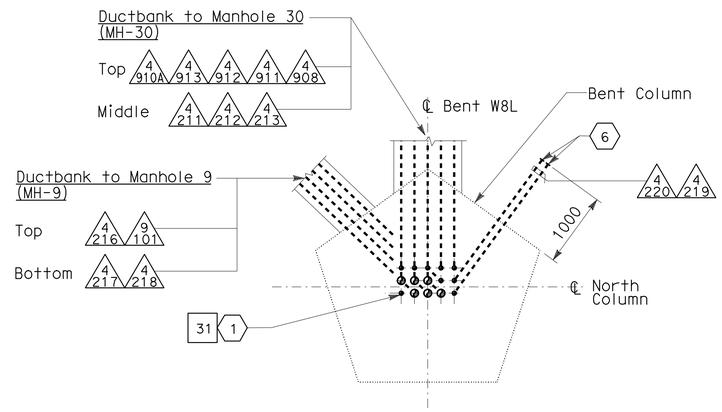

SECTION B-B
SCALE: 1:40

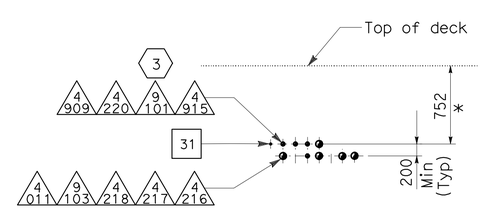

SECTION D-D
NO SCALE

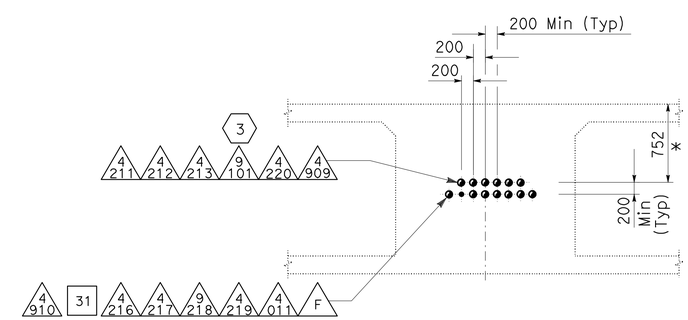

SECTION E-E
NO SCALE

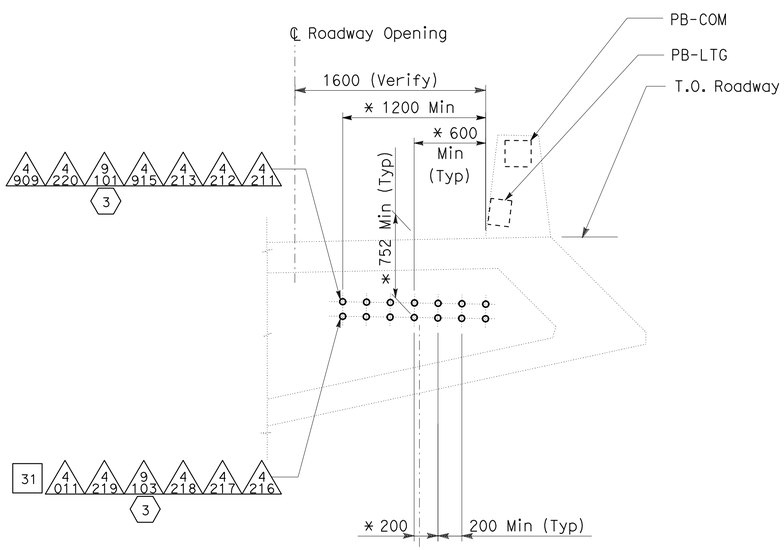

DETAIL 1 - BENT W8L 5
NO SCALE

NOTES:

1. References:
   - For service platform, details refer to sheets E-64 thru E-66.
   - (*) Dimension to be provided by Structural.

SHEET NOTES:

1. Ground conductor for 250 kcmil bare copper wire. Routed inside underground duct banks in column Bent W8, connected and tapped from ground bar for service platform grounding system. Refer to sheets E-34 and E-79.
2. For typical conduit support, see sheet E-86.
3. Conduits to be installed in this contract but are reserved for future SMD.
4. Stub-out and cap conduits 0254, 0255 and 0256, outside the duct bank.
5. Detail 1 and section E-E shown is from Bent W8L, see sheet E-81.
6. Stub out and cap conduits for future use.

5 **REVISED PER ADDENDUM No. 5 DATED JULY 30, 2009**

STRUCTURE DETAILS OF CONDUIT RISER TO W8

DETAILS
YBI TRANSITION STRUCTURES GIRDER WESTBOUND (BENT W8L ELEVATION AND SECTIONS)
SCALE AS NOTED

THIS PLAN ACCURATE FOR ELECTRICAL WORK ONLY.

ALL DIMENSIONS ARE IN MILLIMETERS UNLESS OTHERWISE SHOWN

E-78

STATE OF CALIFORNIA - DEPARTMENT OF TRANSPORTATION — Caltrans

CONSULTANT FUNCTIONAL SUPERVISOR: BEHZAD GOLEMOHAMMADI

CALCULATED-DESIGNED BY: AB — CHECKED BY: FK — REVISED BY — DATE REVISED

LAST REVISION 00-00-00 — DATE PLOTTED => 28-JUL-2009 — TIME PLOTTED => 06:22

Dist	COUNTY	ROUTE	KILOMETER POST TOTAL PROJECT	SHEET No.	TOTAL SHEETS
04	SF	80	12.7/13.2	200	806

REGISTERED ELECTRICAL ENGINEER 2/14/08

6-23-08
PLANS APPROVAL DATE

REGISTERED PROFESSIONAL ENGINEER FADI WALIEDDINE No. 11465 Exp. 12/31/09 ELECTRICAL STATE OF CALIFORNIA

THE STATE OF CALIFORNIA OR ITS OFFICERS OR AGENTS SHALL NOT BE RESPONSIBLE FOR THE ACCURACY OR COMPLETENESS OF ELECTRONIC COPIES OF THIS PLAN SHEET.

PB AMERICAS, Inc.
A Parsons Brinckerhoff Company
303 Second St., Suite 700N
San Francisco, CA 94107-1317

Caltrans Metric

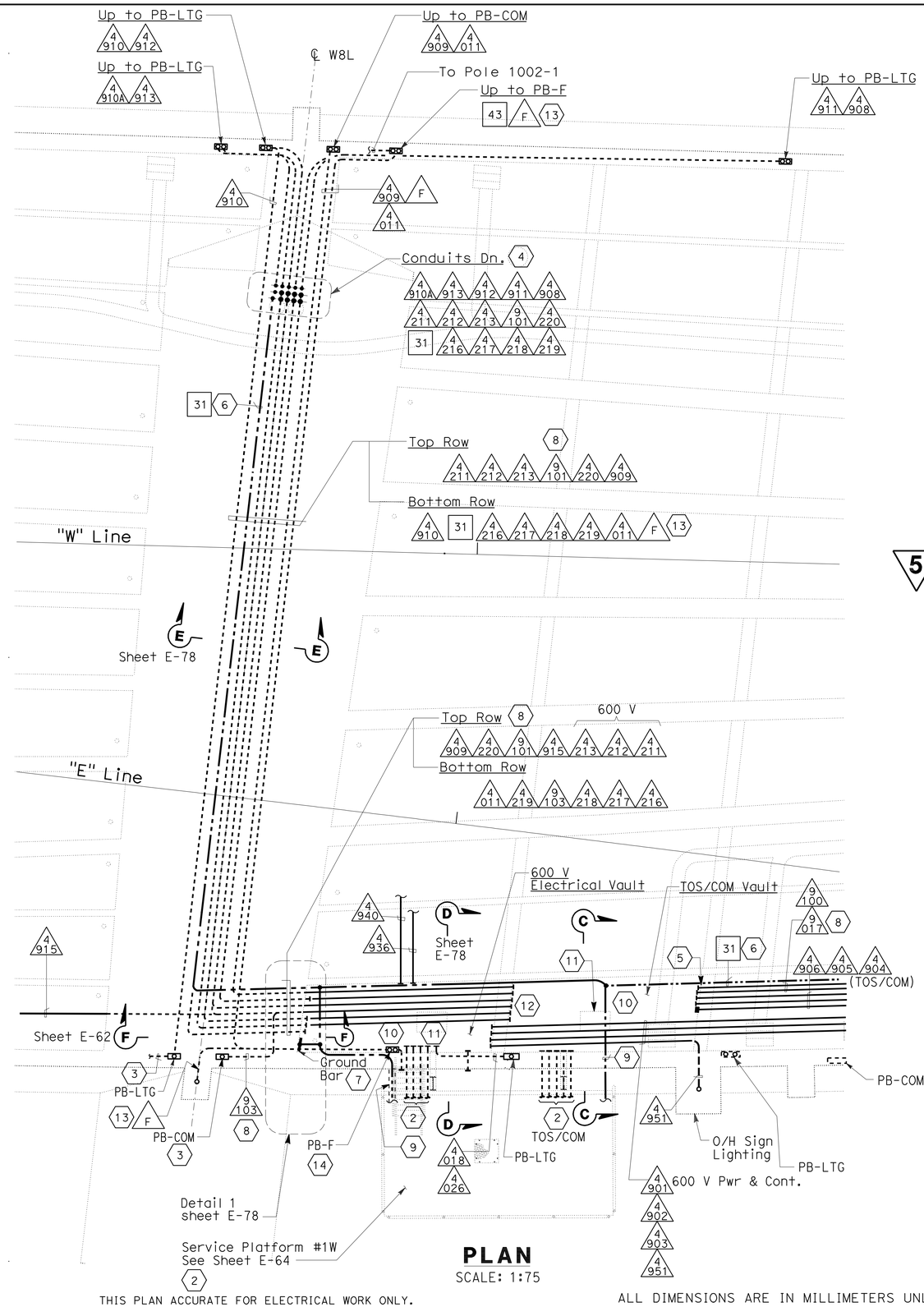

PLAN
SCALE: 1:75

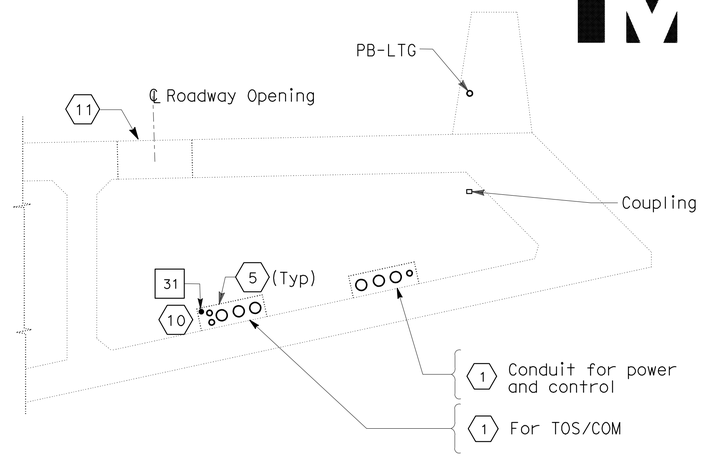

SECTION C-C
NO SCALE

5 REVISED PER ADDENDUM No. 5 DATED JULY 30, 2009

SHEET NOTES:

1. For conduit No. refer to plan layout as shown, U.N.O. see sheet E-50.
2. For Service Platform #1W equipment, conduit and grounding plan, see sheet E-64.
3. For conduit routing up to PB-LTG or PB-COM, see sheets E-50.
4. For embedded conduits in column. See sheet E-78.
5. For utility opening, see Structures Sheets.
6. For ground conductor 250 kcmil Bare copper, route inside underground duct bank and connect to main 500 kcmil system ground conductor. Refer to sheet E-79.
7. For grounding details see sheet E-80.
8. Conduits to be installed in this contract but are reserved for future SMD.
9. For service platform grounding use #4/0 AWG bare copper ground cable, tapped from ground bar, see sheet E-64 for continuation.
10. For tray installation, see E-86 detail 1 and E-64.
11. For roadway deck access opening, see structures sheets. Access cover engraving "ELECTRICAL" and "TOS/COM".
12. Install cable pull irons in all vaults, cast in each endwall.
13. Install 41 mm (F) conduit from 600 V Vault IW to Poles 1022-1 and 1002-1. Required for future camera #14 and #13 (By others).
14. PB-F same as PB-COM, label to be determined by the Engineer.

NOTES:

1. References:
   - Minimum conduit radius of 103 mm conduits shall be 610 mm.
   - For conduit support location, refer to sheets E-87 through E-89 and AS drawings for conduit support details.
2. For overall grounding system. Refer to sheet E-34.
3. For conduit support, see sheet E-87.
4. For overall plan of this area, see sheet E-74.

THIS PLAN ACCURATE FOR ELECTRICAL WORK ONLY.

ALL DIMENSIONS ARE IN MILLIMETERS UNLESS OTHERWISE SHOWN

DETAILS
YBI TRANSITION STRUCTURES GIRDER WESTBOUND (VAULT SECTIONS AND DETAILS)

SCALE AS NOTED

E-81

REVISED BY	DATE REVISED
FK	AB

CALCULATED-DESIGNED BY / CHECKED BY

CONSULTANT FUNCTIONAL SUPERVISOR: BEHZAD GOLEMOHAMMADI

STATE OF CALIFORNIA - DEPARTMENT OF TRANSPORTATION
Caltrans

LAST REVISION 00-00-00 DATE PLOTTED => 28-JUL-2009 TIME PLOTTED => 06:23

Dist	COUNTY	ROUTE	KILOMETER POST TOTAL PROJECT	SHEET No.	TOTAL SHEETS
04	SF	80	12.7/13.2	201	806

REGISTERED ELECTRICAL ENGINEER 2/14/08

6-23-08
PLANS APPROVAL DATE

REGISTERED PROFESSIONAL ENGINEER FADI WALIEDDINE No. 11465 Exp. 12/31/09 ELECTRICAL STATE OF CALIFORNIA

THE STATE OF CALIFORNIA OR ITS OFFICERS OR AGENTS SHALL NOT BE RESPONSIBLE FOR THE ACCURACY OR COMPLETENESS OF ELECTRONIC COPIES OF THIS PLAN SHEET.

PB AMERICAS, Inc.
A Parsons Brinckerhoff Company
303 Second St., Suite 700N
San Francisco, CA 94107-1317

Caltrans Metric

5

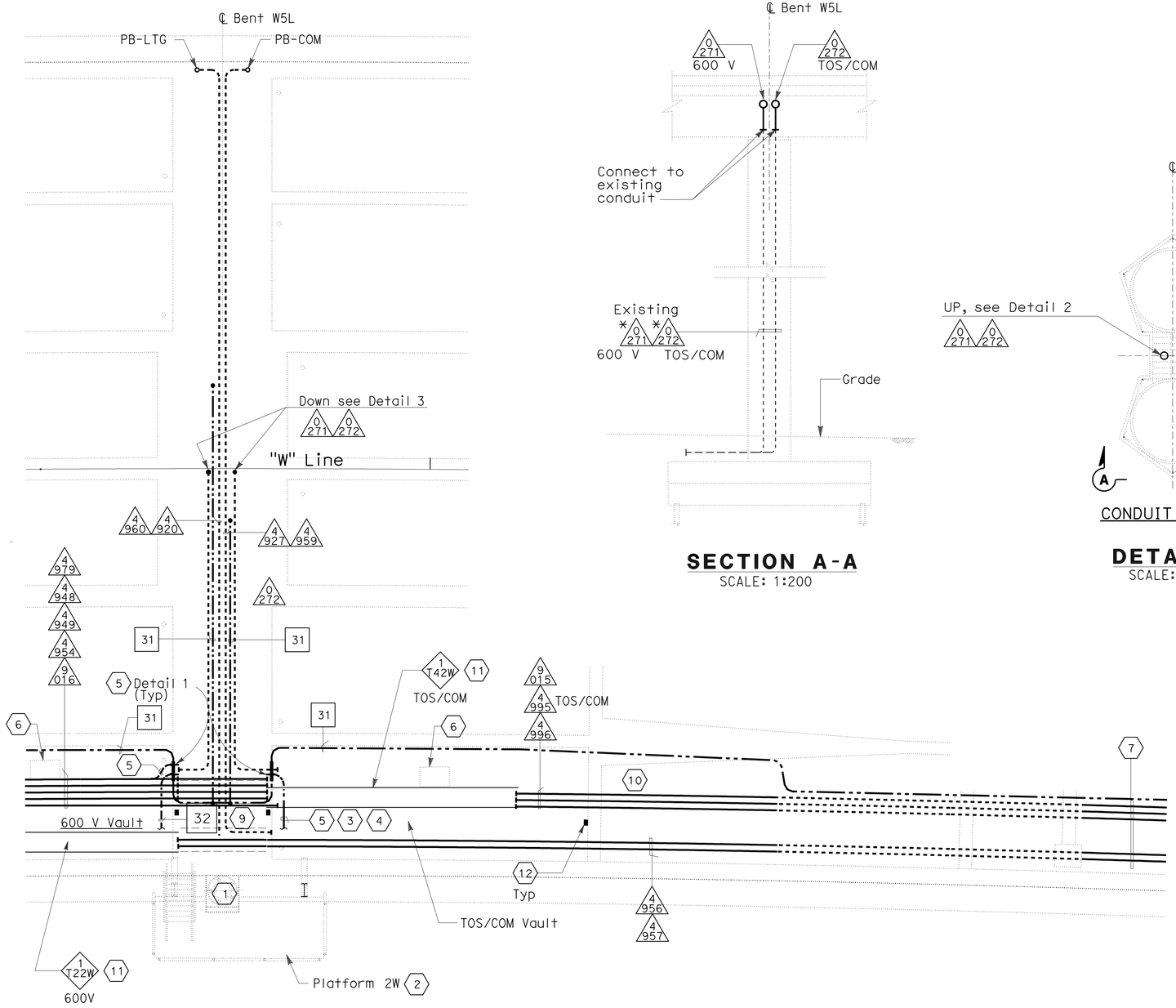

DETAIL 2
GIRDER CONDUIT PLAN
SCALE: 1:75

SECTION A-A
SCALE: 1:200

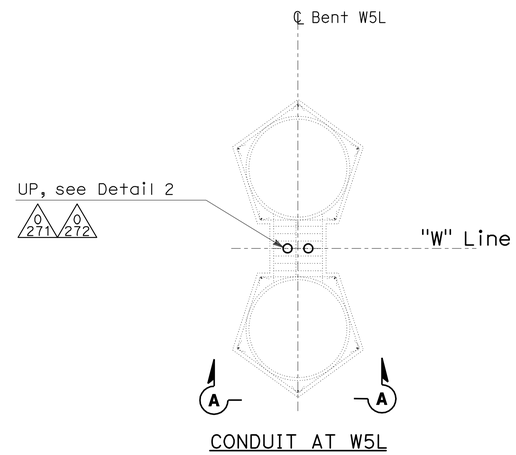

CONDUIT AT W5L

DETAIL 3
SCALE: 1:80

SHEET NOTES:

1. For conduit stub-up inside lighting pole on a concrete base. See sheet E-58 and E-59.
2. For service platform plans & section, see sheet E-65.
3. For continuation, see sheet E-65.
4. For service platform grounding, use #4/0 AWG bare copper ground cables tapped from ground bars, passed thru 27C-PVC conduits and bolted inside wireway. See sheet E-65 for continuation.
5. System ground conductor #4/0 bare copper wire, use a continuous bare cable to bond all rigid steel galv. (RGS) conduits and pull boxes. Refer to sheet E-80.
6. For roadway deck access opening, see structures sheets. Access cover engraving "ELECTRICAL" and "TOS/COM".
7. For conduit routing in barrier, see sheets E-75 and E-83.
8. Not used.
9. For conduit routing, see E-65.
10. For utility openings, see Structures Sheets.
11. For tray installation, see E-86 and E-65.
12. Install cable pull irons on all vaults, cast in each endwall.

NOTES:

1. References:
   - Minimum conduit radius of 103 mm conduits shall be 610 mm.
   - For conduit support location, refer to sheets E-87 through E-89 and AS drawings for conduit support details.
2. For overall grounding system. Refer to sheet E-34.
3. For conduit support, see sheets E-86.

5 REVISED PER ADDENDUM No. 5 DATED JULY 30, 2009

DETAILS
YBI TRANSITION STRUCTURES GIRDER WESTBOUND (VAULT SECTIONS AND DETAILS)
SCALE AS NOTED

E-82

THIS PLAN ACCURATE FOR ELECTRICAL WORK ONLY.

ALL DIMENSIONS ARE IN METERS UNLESS OTHERWISE SHOWN

STATE OF CALIFORNIA - DEPARTMENT OF TRANSPORTATION
Caltrans

CONSULTANT FUNCTIONAL SUPERVISOR: BEHZAD GOLEMOHAMMADI
CALCULATED-DESIGNED BY: FK
CHECKED BY: AB
REVISED BY
DATE REVISED

LAST REVISION 00-00-00
DATE PLOTTED => 28-JUL-2009
TIME PLOTTED => 06:23

Dist	COUNTY	ROUTE	KILOMETER POST TOTAL PROJECT	SHEET No.	TOTAL SHEETS
04	SF	80	12.7/13.2	203	806

2/14/08
REGISTERED ELECTRICAL ENGINEER

6-23-08
PLANS APPROVAL DATE

REGISTERED PROFESSIONAL ENGINEER
FADI WALIEDDINE
No. 11465
Exp. 12/31/09
ELECTRICAL
STATE OF CALIFORNIA

THE STATE OF CALIFORNIA OR ITS OFFICERS OR AGENTS SHALL NOT BE RESPONSIBLE FOR THE ACCURACY OR COMPLETENESS OF ELECTRONIC COPIES OF THIS PLAN SHEET.

PB AMERICAS, Inc.
A Parsons Brinckerhoff Company
303 Second St., Suite 700N
San Francisco, CA 94107-1317

5

LIGHT PIPE SCHEDULE

Circuit Number	Location: Reference (1)	Location: Roadway side	Mounting	LTG. Fixture Type	Number/ Wattage	Remarks
A-1007	E-75	North	Bracket mounted	YAL	1-400 W	with Remote Ballast
A-1007	E-75	North	Bracket mounted	YAL	1-400 W	with Remote Ballast
A-1007	E-75	North	Bracket mounted	YAL	1-400 W	with Remote Ballast
A-1007	E-75	North	Bracket mounted	YAL	1-400 W	with Remote Ballast
A-1007	E-75	North	Bracket mounted	YAL	1-400 W	with Remote Ballast
A-1007	E-75	North	Bracket mounted	YAL	1-400 W	with Remote Ballast
A-1007	E-75	North	Bracket mounted	YAL	1-400 W	with Remote Ballast
A-1007	E-75	North	Bracket mounted	YAL	1-400 W	with Remote Ballast
A-1007	E-75	North	Bracket mounted	YAL	1-400 W	with Remote Ballast
A-1007	E-75	North	Bracket mounted	YAL	1-400 W	with Remote Ballast
A-1007	E-75	North	Bracket mounted	YAL	1-400 W	with Remote Ballast
A-1007	E-75	North	Bracket mounted	YAL	1-400 W	with Remote Ballast
A-1007	E-75	North	Bracket mounted	YAL	1-400 W	with Remote Ballast
A-1007	E-75	North	Bracket mounted	YAL	1-400 W	with Remote Ballast
A-1007	E-75, E-76	North	Bracket mounted	YAL	1-400 W	with Remote Ballast
A-1007	E-75, E-76	North	Bracket mounted	YAL	1-400 W	with Remote Ballast
A-1008	E-76	North	Bracket mounted	YAL	1-400 W	with Remote Ballast
A-1008	E-76	North	Bracket mounted	YAL	1-400 W	with Remote Ballast
A-1008	E-76	North	Bracket mounted	YAL	1-400 W	with Remote Ballast
A-1008	E-76	North	Bracket mounted	YAL	1-400 W	with Remote Ballast
A-1008	E-76	North	Bracket mounted	YAL	1-400 W	with Remote Ballast
A-1008	E-76	North	Bracket mounted	YAL	1-400 W	with Remote Ballast
A-1008	E-76	North	Bracket mounted	YAL	1-400 W	with Remote Ballast
A-1008	E-76	North	Bracket mounted	YAL	1-400 W	with Remote Ballast
A-1008	E-76	North	Bracket mounted	YAL	1-400 W	with Remote Ballast
A-1008	E-76	North	Bracket mounted	YAL	1-400 W	with Remote Ballast
A-1008	E-76	North	Bracket mounted	YAL	1-400 W	with Remote Ballast
A-1008	E-76	North	Bracket mounted	YAL	1-400 W	with Remote Ballast
A-1008	E-76	North	Bracket mounted	YAL	1-400 W	with Remote Ballast
A-1008	E-76	North	Bracket mounted	YAL	1-400 W	with Remote Ballast
A-1008	E-76	North	Bracket mounted	YAL	1-400 W	with Remote Ballast
A-1008	E-76	North	Bracket mounted	YAL	1-400 W	with Remote Ballast
A-1008	E-76	North	Bracket mounted	YAL	1-400 W	with Remote Ballast
A-1008	E-76	North	Bracket mounted	YAL	1-400 W	with Remote Ballast
A-1008	E-76	North	Bracket mounted	YAL	1-400 W	with Remote Ballast
A-1008	E-76	North	Bracket mounted	YAL	1-400 W	with Remote Ballast
A-1008	E-76	North	Bracket mounted	YAL	1-400 W	with Remote Ballast
A-1008	E-76	North	Bracket mounted	YAL	1-400 W	with Remote Ballast

5

LIGHT PIPE SCHEDULE

Circuit Number	Location: Reference (1)	Location: Roadway side	Mounting	LTG. Fixture Type	Number/ Wattage	Remarks
A-1009	E-74, E-75	North	Bracket mounted	YAL	1-400 W	with Remote Ballast
A-1009	E-74, E-75	North	Bracket mounted	YAL	1-400 W	with Remote Ballast
A-1009	E-74, E-75	North	Bracket mounted	YAL	1-400 W	with Remote Ballast
A-1009	E-74, E-75	North	Bracket mounted	YAL	1-400 W	with Remote Ballast
A-1009	E-74, E-75	North	Bracket mounted	YAL	1-400 W	with Remote Ballast
A-1009	E-74, E-75	North	Bracket mounted	YAL	1-400 W	with Remote Ballast
A-1009	E-74, E-75	North	Bracket mounted	YAL	1-400 W	with Remote Ballast
A-1010	E-73, E-74	North	Bracket mounted	YAL	1-400 W	with Remote Ballast
A-1010	E-73, E-74	North	Bracket mounted	YAL	1-400 W	with Remote Ballast
A-1010	E-73, E-74	North	Bracket mounted	YAL	1-400 W	with Remote Ballast
A-1010	E-73, E-74	North	Bracket mounted	YAL	1-400 W	with Remote Ballast
A-1010	E-73, E-74	North	Bracket mounted	YAL	1-400 W	with Remote Ballast
A-1010	E-73, E-74	North	Bracket mounted	YAL	1-400 W	with Remote Ballast
A-1010	E-73, E-74	North	Bracket mounted	YAL	1-400 W	with Remote Ballast
A-1010	E-73, E-74	North	Bracket mounted	YAL	1-400 W	with Remote Ballast
A-1010	E-73, E-74	North	Bracket mounted	YAL	1-400 W	with Remote Ballast
A-1010	E-73, E-74	North	Bracket mounted	YAL	1-400 W	with Remote Ballast
A-1010	E-73, E-74	North	Bracket mounted	YAL	1-400 W	with Remote Ballast
A-1010	E-73, E-74	North	Bracket mounted	YAL	1-400 W	with Remote Ballast
A-1010	E-73, E-74	North	Bracket mounted	YAL	1-400 W	with Remote Ballast
A-1010	E-73, E-74	North	Bracket mounted	YAL	1-400 W	with Remote Ballast
A-1010	E-73, E-74	North	Bracket mounted	YAL	1-400 W	with Remote Ballast
A-1010	E-73, E-74	North	Bracket mounted	YAL	1-400 W	with Remote Ballast
A-1010	E-73, E-74	North	Bracket mounted	YAL	1-400 W	with Remote Ballast
A-1010	E-73, E-74	North	Bracket mounted	YAL	1-400 W	with Remote Ballast
A-1010	E-73, E-74	North	Bracket mounted	YAL	1-400 W	with Remote Ballast
A-1010	E-73, E-74	North	Bracket mounted	YAL	1-400 W	with Remote Ballast
A-1010	E-73, E-74	North	Bracket mounted	YAL	1-400 W	with Remote Ballast
A-1010	E-73, E-74	North	Bracket mounted	YAL	1-400 W	with Remote Ballast
A-1010	E-73, E-74	North	Bracket mounted	YAL	1-400 W	with Remote Ballast
A-1010	E-73, E-74	North	Bracket mounted	YAL	1-400 W	with Remote Ballast
A-1010	E-73, E-74	North	Bracket mounted	YAL	1-400 W	with Remote Ballast
A-1010	E-73, E-74	North	Bracket mounted	YAL	1-400 W	with Remote Ballast
A-1010	E-73, E-74	North	Bracket mounted	YAL	1-400 W	with Remote Ballast
A-1010	E-73, E-74	North	Bracket mounted	YAL	1-400 W	with Remote Ballast
A-1010	E-73, E-74	North	Bracket mounted	YAL	1-400 W	with Remote Ballast
A-1010	E-73, E-74	North	Bracket mounted	YAL	1-400 W	with Remote Ballast
A-1010	E-73, E-74	North	Bracket mounted	YAL	1-400 W	with Remote Ballast
A-1010	E-73, E-74	North	Bracket mounted	YAL	1-400 W	with Remote Ballast
A-1010	E-73, E-74	North	Bracket mounted	YAL	1-400 W	with Remote Ballast
A-1010	E-73, E-74	North	Bracket mounted	YAL	1-400 W	with Remote Ballast
A-1010	E-73, E-74	North	Bracket mounted	YAL	1-400 W	with Remote Ballast

SHEET NOTES:

(1) Approximate location of light pipe housing.

NOTES:

1. References:
   - For circuit numbers, see single line diagrams, sheets E-77 and E-77A.
2. Light pipe lighting fixture type YAL are not supplied under this contract.
3. For fixture descriptions and specifications, see Electrical Special Provisions.

5

5 **REVISED PER ADDENDUM No. 5 DATED JULY 30, 2009**

THIS PLAN ACCURATE FOR ELECTRICAL WORK ONLY.

DETAILS
YBI TRANSITION STRUCTURES GIRDER WESTBOUND (LIGHT PIPE SCHEDULE)
NO SCALE

E-84

REVISED BY | DATE REVISED
FK | AB
CALCULATED-DESIGNED BY | CHECKED BY
CONSULTANT FUNCTIONAL SUPERVISOR
BEHZAD GOLEMOHAMMADI

STATE OF CALIFORNIA - DEPARTMENT OF TRANSPORTATION
Caltrans

LAST REVISION 00-00-00
DATE PLOTTED => 28-JUL-2009
TIME PLOTTED => 06:23

Dist	COUNTY	ROUTE	KILOMETER POST TOTAL PROJECT	SHEET No.	TOTAL SHEETS
04	SF	80	12.7/13.2	211	806

REGISTERED ELECTRICAL ENGINEER 2/14/08

6-23-08
PLANS APPROVAL DATE

REGISTERED PROFESSIONAL ENGINEER FADI WALIEDDINE No. 11465 Exp. 12/31/09 ELECTRICAL STATE OF CALIFORNIA

THE STATE OF CALIFORNIA OR ITS OFFICERS OR AGENTS SHALL NOT BE RESPONSIBLE FOR THE ACCURACY OR COMPLETENESS OF ELECTRONIC COPIES OF THIS PLAN SHEET.

PB AMERICAS, Inc.
A Parsons Brinckerhoff Company
303 Second St., Suite 700N
San Francisco, CA 94107-1317

Caltrans Metric

SHEET NOTES:

1. For call box locations and schedule, see sheets E-168 & E-172.
2. For routing of conduit in girder and crossing of roadway, see sheets E-119.
3. For conduit routing inside barriers and pole bases, see sheets E-98 thru E-100.
4. For 480 V roadway lighting wiring diagrams, see sheets E-94 and E-95.
5. For 120 V bike path lighting wiring diagrams, see sheets E-96 and E-97.
6. For railing post location, refer to YBI EB on-ramp structural drawings.
7. For typical bike path lighting location, refer to YBI EB on-ramp structural drawings.
8. For typical bike path lighting and railing, see sheets E-103 & E-104.
9. Between hinge W6RB and station 54+40 stub-out conduits from all PB-LTG for future installation of light pipe, see sheets E-103 & E-104. Coil 2 m of circuit leads in PB-LTG.
10. Stub-out conduits from PB-LTG for future installation of bike path lighting. Coil conductors in PB-LTG.
11. Install 41C RGS conduit from PB-LTG to PB-1C for circuit LP218-1, 3, 5.
12. Location for conduit stub out for Bike Path lighting has to coincide with location of Bike Path railing divider posts. The contractor shall coordinate and ensure proper alignment. See typical Bike Path Details on sheets E-103 and E-104.

5

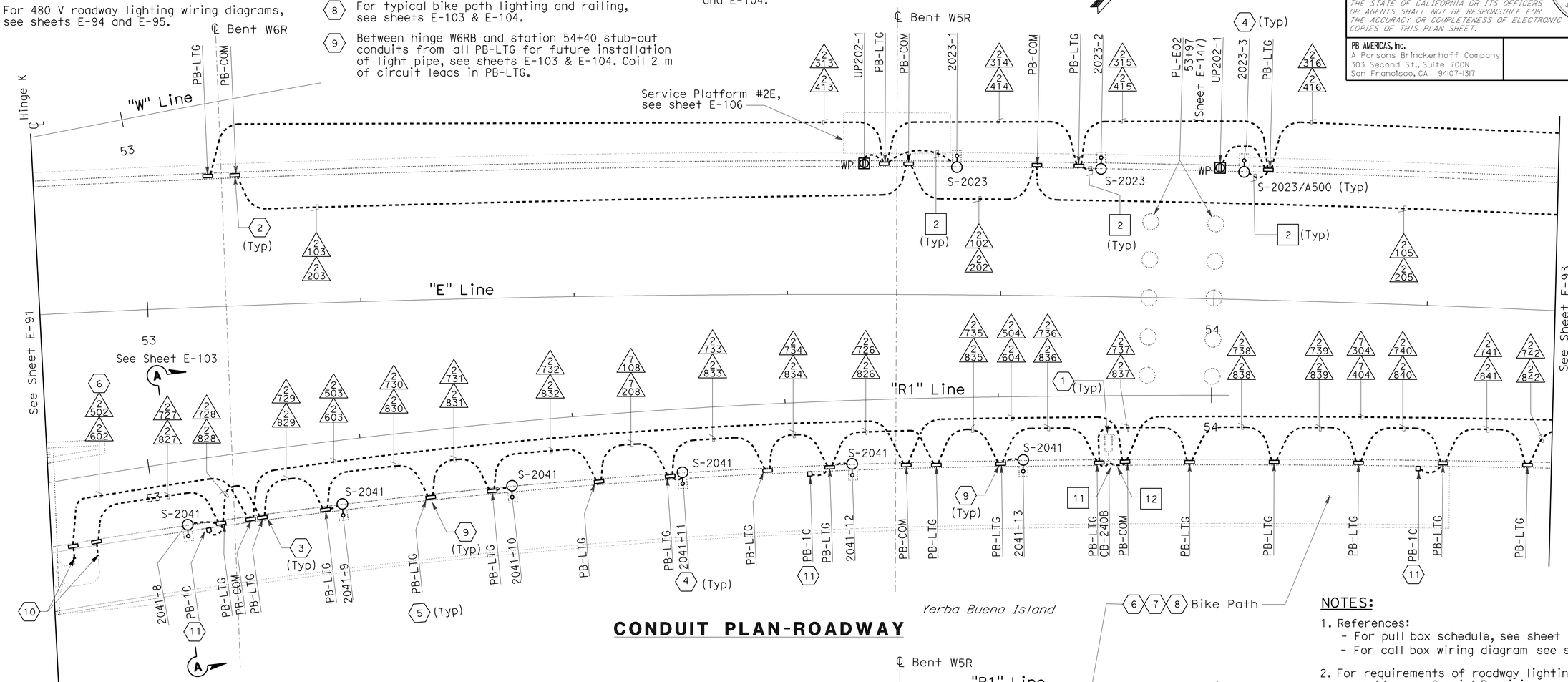

CONDUIT PLAN-ROADWAY

NOTES:

1. References:
   - For pull box schedule, see sheet E-109.
   - For call box wiring diagram see sheet E-171.
2. For requirements of roadway lighting pole assembly, see Special Provisions.

5 **REVISED PER ADDENDUM No. 5 DATED JULY 30, 2009**

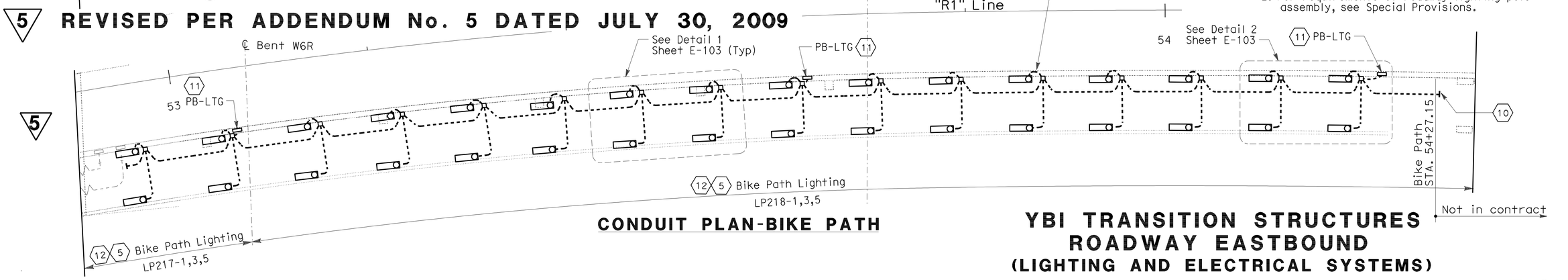

CONDUIT PLAN-BIKE PATH

YBI TRANSITION STRUCTURES ROADWAY EASTBOUND (LIGHTING AND ELECTRICAL SYSTEMS)

SCALE: 1:200

E-92

THIS PLAN ACCURATE FOR ELECTRICAL WORK ONLY.

ALL DIMENSIONS ARE IN METERS UNLESS OTHERWISE SHOWN

STATE OF CALIFORNIA - DEPARTMENT OF TRANSPORTATION
Caltrans

CONSULTANT FUNCTIONAL SUPERVISOR: BEHZAD GOLEMOHAMMADI
CALCULATED-DESIGNED BY
CHECKED BY
REVISED BY: FK
DATE REVISED: AB

LAST REVISION 00-00-00
DATE PLOTTED => 28-JUL-2009
TIME PLOTTED => 06:24

Dist	COUNTY	ROUTE	KILOMETER POST TOTAL PROJECT	SHEET No.	TOTAL SHEETS
04	SF	80	12.7/13.2	216	806

REGISTERED ELECTRICAL ENGINEER — 2/14/08 DATE

6-23-08
PLANS APPROVAL DATE

REGISTERED PROFESSIONAL ENGINEER — FADI WALIEDDINE No. 11465 Exp. 12/31/09 ELECTRICAL — STATE OF CALIFORNIA

THE STATE OF CALIFORNIA OR ITS OFFICERS OR AGENTS SHALL NOT BE RESPONSIBLE FOR THE ACCURACY OR COMPLETENESS OF ELECTRONIC COPIES OF THIS PLAN SHEET.

PB AMERICAS, Inc.
A Parsons Brinckerhoff Company
303 Second St., Suite 700N
San Francisco, CA 94107-1317

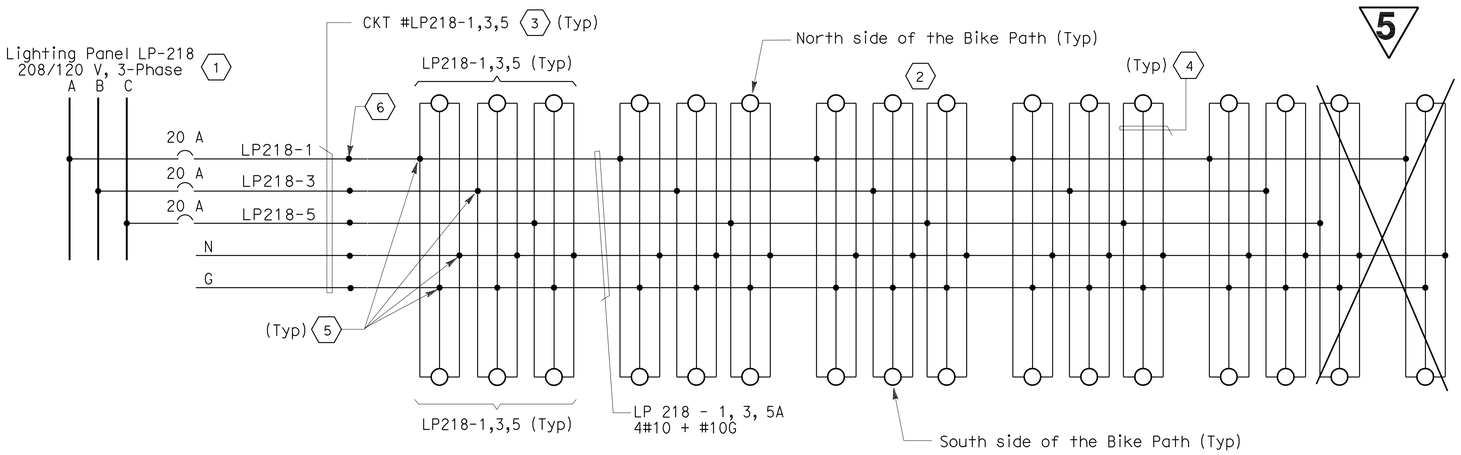

SHEET NOTES:

1. For LP-218 schedule, see E-116.
2. For lighting fixtures locations. See per plan lighting layout. Refer to sheets E-90 thru E-93.
3. Lighting feeder cable 4/C+ #8 + G.
4. #10 AWG single conductors.
5. Conductors spliced inside PB-1C located next to bike path.
6. Conductors spliced in PB-LTG.
7. For type and size of in line fusing, see Caltrans Standard plans. Locate inside bike path lighting housing.

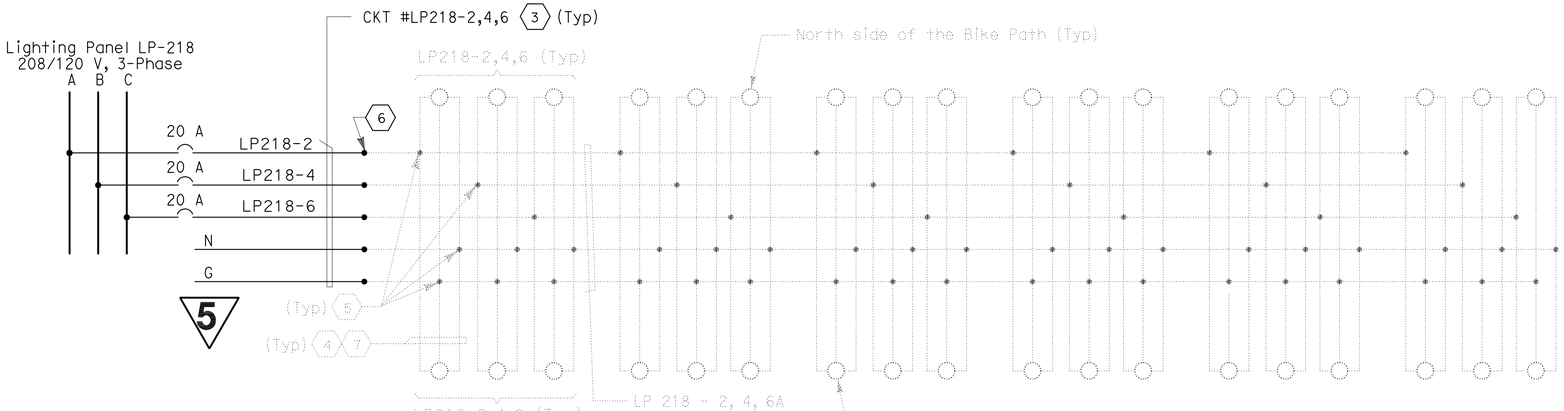

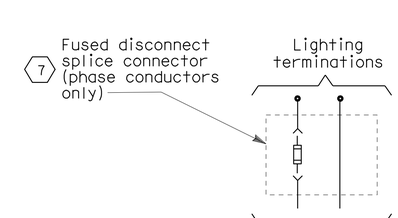

DETAIL-1
(TYP. FOR EACH BIKE PATH LIGHTING)

5 **REVISED PER ADDENDUM No. 5 DATED JULY 30, 2009**

DETAILS
YBI TRANSITION STRUCTURES
ROADWAY EASTBOUND
(120 V BIKE PATH LIGHTING WIRING DIAGRAM)

NO SCALE

E-97

THIS PLAN ACCURATE FOR ELECTRICAL WORK ONLY.

STATE OF CALIFORNIA - DEPARTMENT OF TRANSPORTATION
Caltrans

CONSULTANT FUNCTIONAL SUPERVISOR: BEHZAD GOLEMOHAMMADI
CALCULATED-DESIGNED BY: FK
CHECKED BY: AB
REVISED BY / DATE REVISED

LAST REVISION 00-00-00 | DATE PLOTTED => 28-JUL-2009 | TIME PLOTTED => 06:24

Dist	COUNTY	ROUTE	KILOMETER POST TOTAL PROJECT	SHEET No.	TOTAL SHEETS
04	SF	80	12.7/13.2	219	806

REGISTERED ELECTRICAL ENGINEER — 2/14/08 DATE

6-23-08
PLANS APPROVAL DATE

REGISTERED PROFESSIONAL ENGINEER — FADI WALIEDDINE No. 11465 Exp. 12/31/09 ELECTRICAL — STATE OF CALIFORNIA

THE STATE OF CALIFORNIA OR ITS OFFICERS OR AGENTS SHALL NOT BE RESPONSIBLE FOR THE ACCURACY OR COMPLETENESS OF ELECTRONIC COPIES OF THIS PLAN SHEET.

PB AMERICAS, Inc.
A Parsons Brinckerhoff Company
303 Second St., Suite 700N
San Francisco, CA 94107-1317

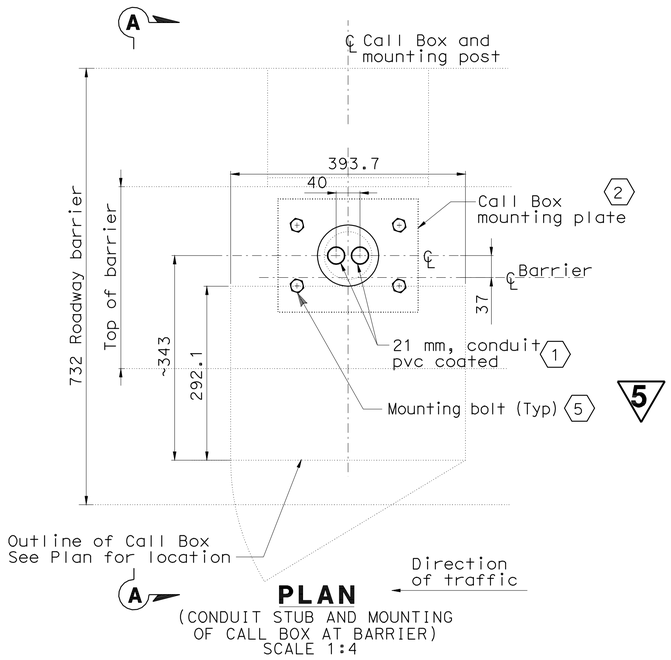

PLAN
(CONDUIT STUB AND MOUNTING OF CALL BOX AT BARRIER)
SCALE 1:4

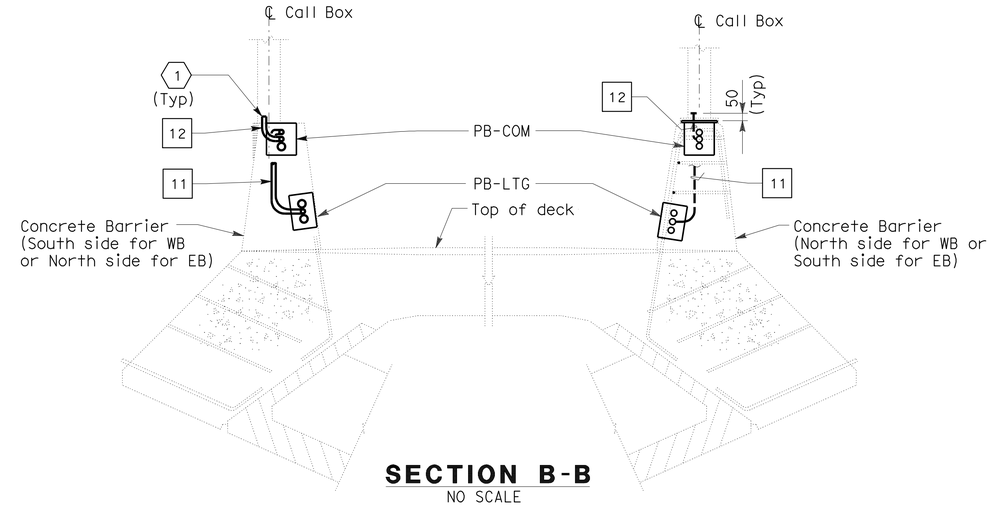

SECTION B-B
NO SCALE

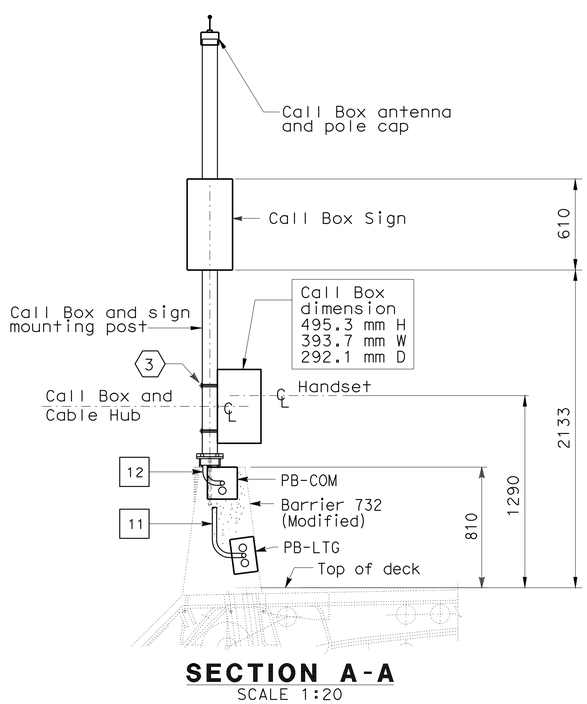

SECTION A-A
SCALE 1:20

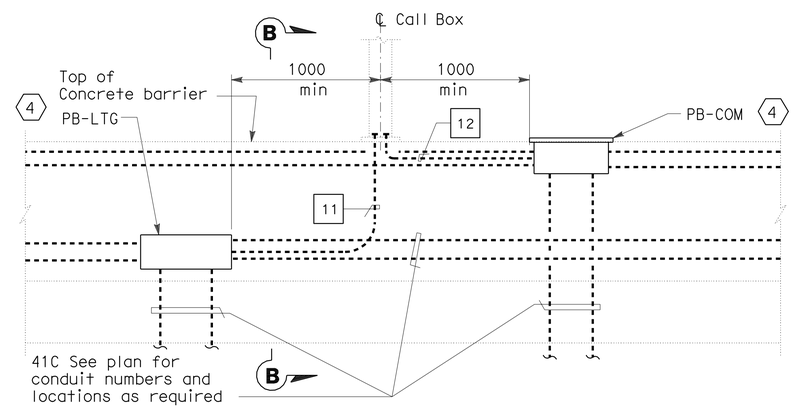

LONGITUDINAL SECTION
(TYPICAL CONDUIT ROUTING INSIDE CONCRETE BARRIER)
NO SCALE

SHEET NOTES:

1. Bond grounding to call box ground lug with #6 bare copper wire.
2. The Engineer will provide information for base plate sizes, hex nuts and flat washer as required.
3. For mounting details of call box, see Structural Details and AS Sheets.
4. Location for devices inside concrete barrier shall be installed by direction of the Engineer.
5. (4) 19.05 Dia. HSB (ASTM A325) 180 mm concrete embedment and 130 mm bolt projection from top of concrete.

NOTES:

1. References:
   - For pull box and call box schedule, see sheet E-109, E-172.
2. For call box mounting, see structural dwgs.
3. For pull box installation, see Std Plans ES-9C and ES-9D. Unless noted otherwise U.N.O.

5 REVISED PER ADDENDUM No. 5 DATED JULY 30, 2009

DETAILS
YBI TRANSITION STRUCTURES ROADWAY EASTBOUND (CONDUIT LOCATIONS)
SCALE AS NOTED

E-100

THIS PLAN ACCURATE FOR ELECTRICAL WORK ONLY.

ALL DIMENSIONS ARE IN MILLIMETERS UNLESS OTHERWISE SHOWN

STATE OF CALIFORNIA - DEPARTMENT OF TRANSPORTATION
Caltrans

CONSULTANT FUNCTIONAL SUPERVISOR: BEHZAD GOLEMOHAMMADI
CALCULATED-DESIGNED BY: FK
CHECKED BY: AB
REVISED BY
DATE REVISED

LAST REVISION 00-00-00
DATE PLOTTED => 28-JUL-2009
TIME PLOTTED => 06:24

Dist	COUNTY	ROUTE	KILOMETER POST TOTAL PROJECT	SHEET No.	TOTAL SHEETS
04	SF	80	12.7/13.2	223	806

REGISTERED ELECTRICAL ENGINEER 2/14/08

6-23-08
PLANS APPROVAL DATE

REGISTERED PROFESSIONAL ENGINEER FADI WALIEDDINE No. 11465 Exp. 12/31/09 ELECTRICAL STATE OF CALIFORNIA

THE STATE OF CALIFORNIA OR ITS OFFICERS OR AGENTS SHALL NOT BE RESPONSIBLE FOR THE ACCURACY OR COMPLETENESS OF ELECTRONIC COPIES OF THIS PLAN SHEET.

PB AMERICAS, Inc.
A Parsons Brinckerhoff Company
303 Second St., Suite 700N
San Francisco, CA 94107-1317

5 Caltrans Metric

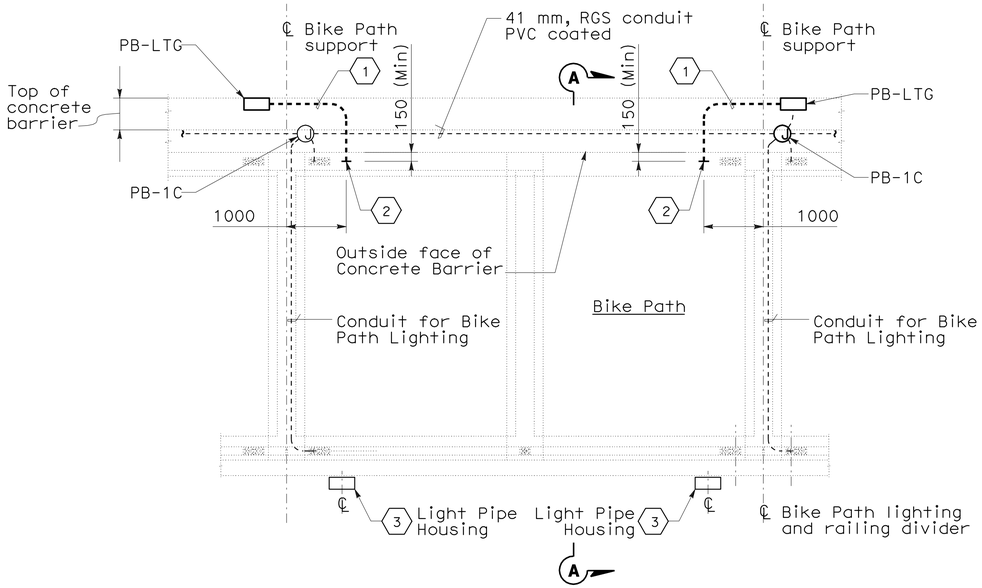

TYPICAL LIGHT PIPE PLAN
NO SCALE

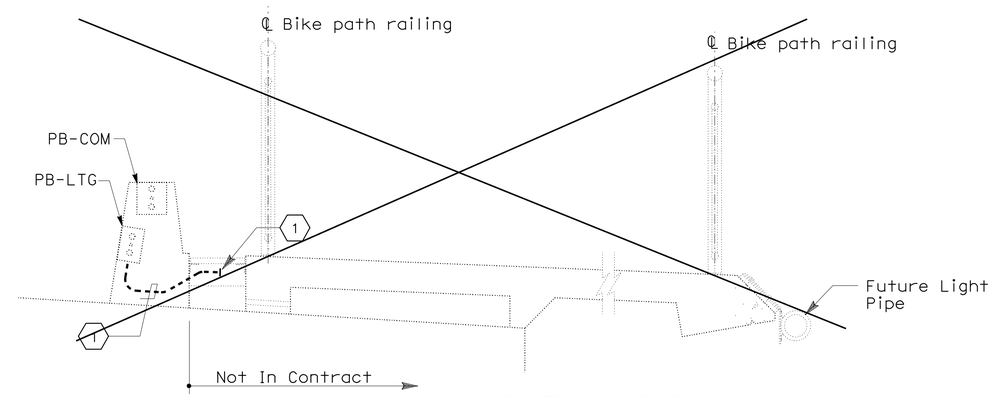

SECTION B-B
(SEE SHEET E-120)
SCALE 1:20

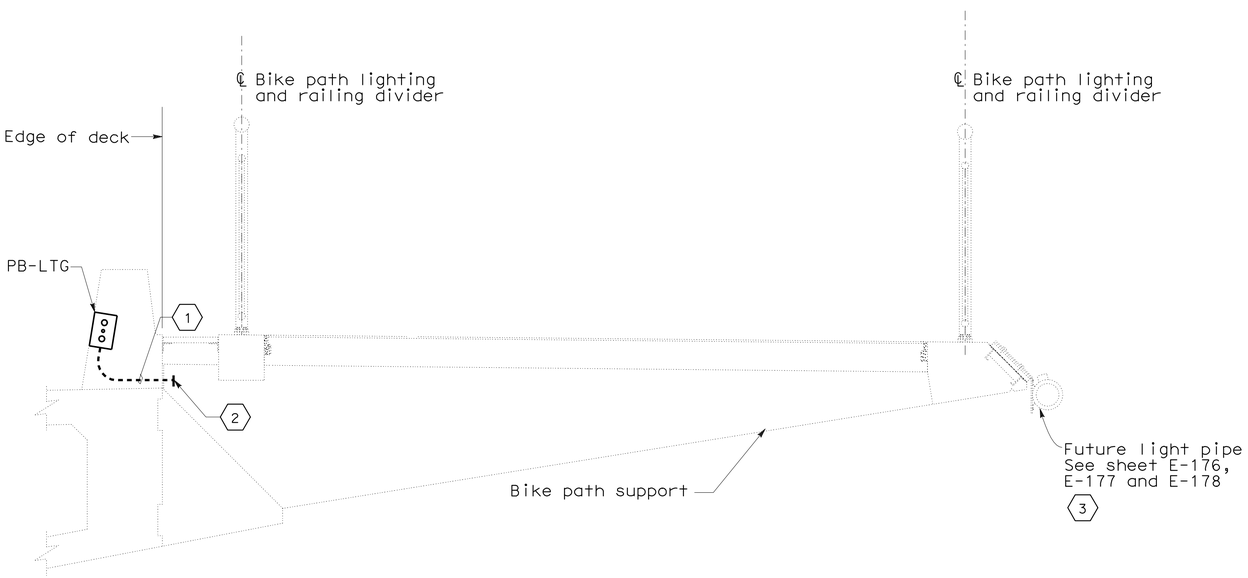

SECTION A-A
SCALE 1:20

SHEET NOTES:

1. Install 21C, RGS conduit from PB-LTG box to outside face of concrete barrier. Cap end of conduit for future use.
2. For actual location of the future light pipe housing, see sheet E-119 and E-120.

NOTES:

1. All exposed conduits and fittings installed between the Roadway and the Bike Path shall be PVC coated galvanized steel.
2. For locations of PB-LTG and PB-COM at the Roadway concrete, see sheets E-90 thru E-93.
3. References:
   - For call box shedule, see sheet E-172.
   - For pull box schedule, see sheet E-109.
   - For railing details refer to Bikeway Railing Detail.
4. ~~(*) for dimension to be provided by structural.~~

5 **REVISED PER ADDENDUM No. 5 DATED JULY 30, 2009**

DETAILS
YBI TRANSITION STRUCTURES ROADWAY EASTBOUND (TYPICAL BIKE PATH PLAN SECTIONS)
SCALE AS NOTED

E-104

THIS PLAN ACCURATE FOR ELECTRICAL WORK ONLY.

ALL DIMENSIONS ARE IN MILLIMETERS UNLESS OTHERWISE SHOWN

STATE OF CALIFORNIA - DEPARTMENT OF TRANSPORTATION
Caltrans

CONSULTANT FUNCTIONAL SUPERVISOR: BEHZAD GOLEMOHAMMADI
CALCULATED-DESIGNED BY: KG
CHECKED BY: PF
REVISED BY
DATE REVISED

LAST REVISION 00-00-00
DATE PLOTTED => 28-JUL-2009
TIME PLOTTED => 06:24

Dist	COUNTY	ROUTE	KILOMETER POST TOTAL PROJECT	SHEET No.	TOTAL SHEETS
04	SF	80	12.7/13.2	224	806

2/14/08
REGISTERED ELECTRICAL ENGINEER

6-23-08
PLANS APPROVAL DATE

REGISTERED PROFESSIONAL ENGINEER FADI WALIEDDINE No. 11465 Exp. 12/31/09 ELECTRICAL STATE OF CALIFORNIA

THE STATE OF CALIFORNIA OR ITS OFFICERS OR AGENTS SHALL NOT BE RESPONSIBLE FOR THE ACCURACY OR COMPLETENESS OF ELECTRONIC COPIES OF THIS PLAN SHEET.

PB AMERICAS, Inc.
A Parsons Brinckerhoff Company
303 Second St., Suite 700N
San Francisco, CA 94107-1317

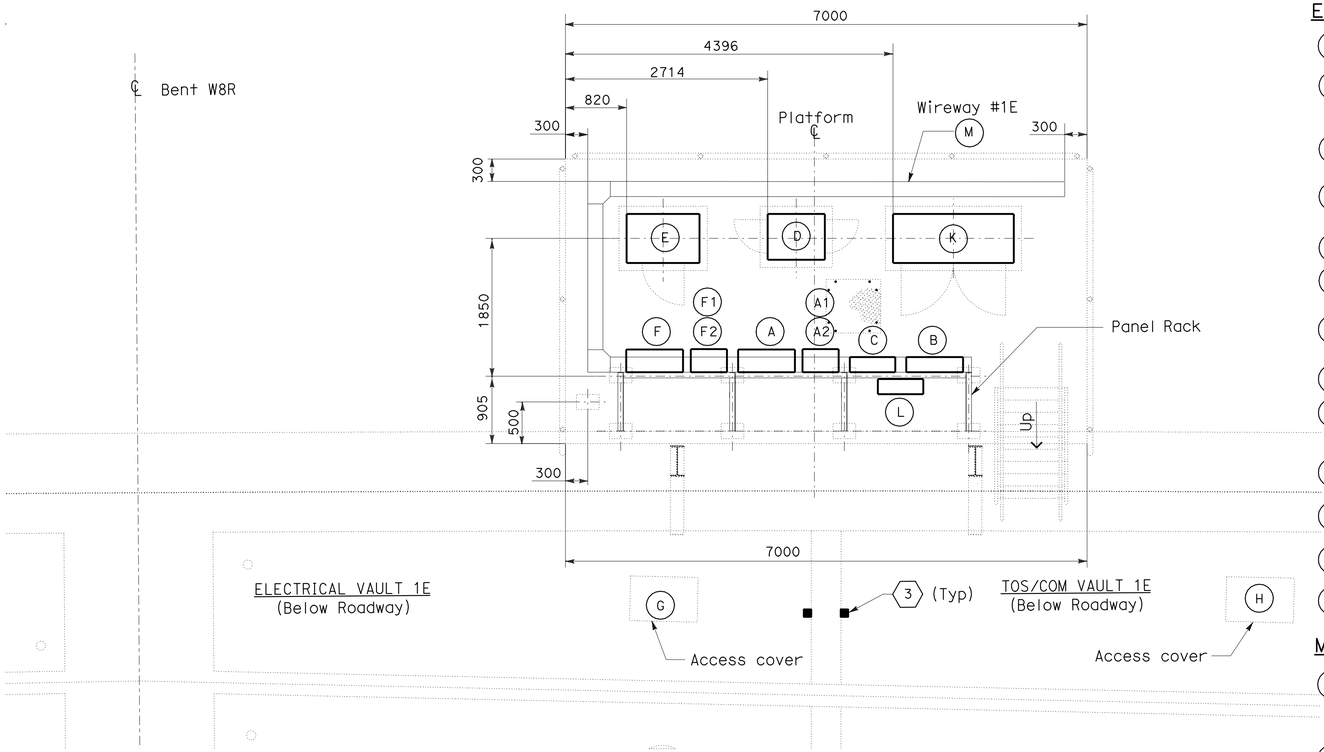

SERVICE PLATFORM #1E EQUIPMENT ARRANGEMENT PLAN (2)

SCALE 1:40

5 REVISED PER ADDENDUM No. 5 DATED JULY 30, 2009

EQUIPMENT SCHEDULE: (2)

- (A) Utility Panel UP-201, 100 A 208/120 V, 3 Phase, 4 Wires (PB-8A).
- (A1) 15 kVA Transformer, 3 Phase, 4 Wires 480 V-208/120 V, 60 HZ. (Nema 4x) Size: 375 H x 232 W x 311 D.
- (A2) Enclosed molded case circuit braker Size: 495 H x 232 W x 124 D.
- (B) Scada Communication Terminal Box #COM-01E (PB-7B).
- (C) Telephone Terminal Box #TEL-01E (PB-7C).
- (D) Controller Cabinet #TOS-01EA Size: 1625 H x 615 W x 768 D.
- (E) TOS Splice Cabinet TOS-01EW Size: 1400 H x 980 W x 660 D.
- (F) Lighting Panel LP-216, 100 A 208/120 V, 3 Phase, 4 Wires (PB-8A).
- (F1) 15 kVA Transformer, 3 Phase, 4 Wires 480 V-208/120 V, 60 HZ. (Nema 4x) Size: 375 H x 485 W x 311 D.
- (F2) Enclosed molded case circuit breaker Size: 495 H x 232 W x 124 D.
- (K) Strong Motion Recorder #1 Size: 1900 H x 1620 W x 660 D.
- (L) PB-2B mounted on panel rack.
- (M) 600 V Wireway #1E, (Nema 4X) 203 H x 203 W.

MISCELLANEOUS:

- (G) Deck utility access opening and cover. Engraving "Electrical Vault 1E". Refer to Structures plan sheets, misc. superstructure Details No. 2".
- (H) Deck utility access opening and cover. Engraving "TOS/COM 1E". Refer to Structures plan sheets, misc. superstructure Details No. 2".

SHEET NOTES:

1. The Contractor to locate to suit site conditions.
2. Equipment dimensions and sizes shown shall be verified by the Contractor prior to installation.
3. Install pull irons in all vaults, cast in each wall.
4. For conduit routing in electrical vault and TOS/COM vault, see sheet E-130.
5. Connect to transformer neutral. See panel schedule.

NOTES:

1. For pull box schedule, refer to sheet E-109.
2. Conduit openings and locations through diaphragm, refer to structures sheets.
3. For details of embedd steel plates, refer to AS sheets.
4. Ground conductor routed outside or exposed shall be green insulated.
5. Conduits terminating inside vaults shall be provided with ground insulated bushing connected to ground bar.

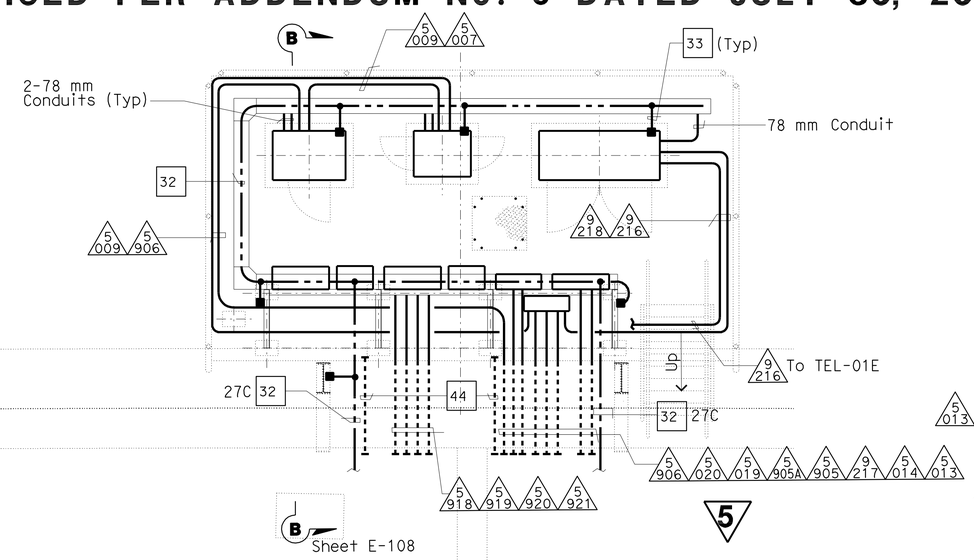

CONDUIT AND GROUNDING PLAN - EB (4)

SCALE 1:40

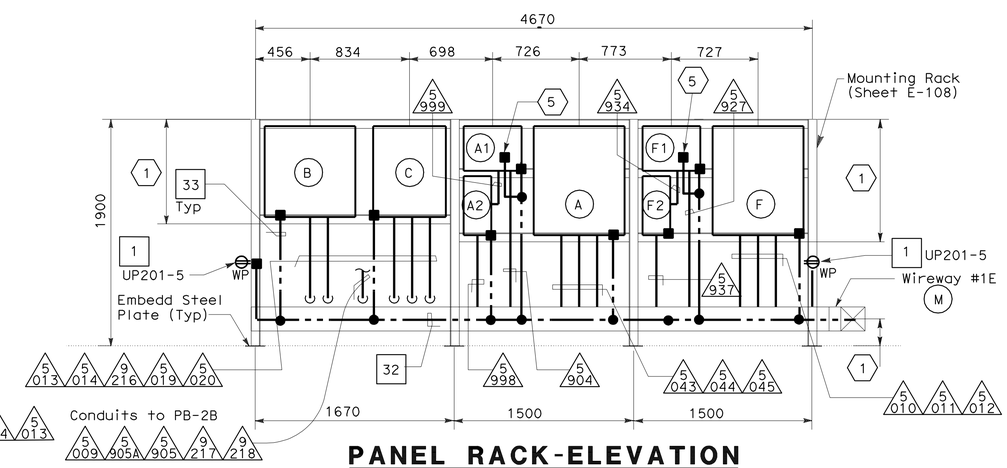

PANEL RACK-ELEVATION

SCALE 1:25

DETAILS

YBI TRANSITION STRUCTURES ROADWAY EASTBOUND (PLATFORM 1E ARRANGEMENT AND PLAN)

SCALE AS NOTED

E-105

THIS PLAN IS ACCURATE FOR ELECTRICAL WORK ONLY.

ALL DIMENSIONS ARE IN MILLIMETERS UNLESS OTHERWISE SHOWN

REVISED BY	DATE REVISED
FK	AB

CALCULATED-DESIGNED BY / CHECKED BY

CONSULTANT FUNCTIONAL SUPERVISOR: BEHZAD GOLEMOHAMMADI

STATE OF CALIFORNIA - DEPARTMENT OF TRANSPORTATION

Caltrans

LAST REVISION 00-00-00 | DATE PLOTTED => 28-JUL-2009 | TIME PLOTTED => 06:25

Dist	COUNTY	ROUTE	KILOMETER POST TOTAL PROJECT	SHEET No.	TOTAL SHEETS
04	SF	80	12.7/13.2	225	806

2/14/08
REGISTERED ELECTRICAL ENGINEER

6-32-08
PLANS APPROVAL DATE

REGISTERED PROFESSIONAL ENGINEER FADI WALIEDDINE No. 11465 Exp. 12/31/09 ELECTRICAL STATE OF CALIFORNIA

THE STATE OF CALIFORNIA OR ITS OFFICERS OR AGENTS SHALL NOT BE RESPONSIBLE FOR THE ACCURACY OR COMPLETENESS OF ELECTRONIC COPIES OF THIS PLAN SHEET.

PB AMERICAS, Inc.
A Parsons Brinckerhoff Company
303 Second St., Suite 700N
San Francisco, CA 94107-1317

Caltrans Metric

SHEET NOTES:

1. The Contractor to locate to suit site condition.
2. Equipment dimensions and sizes shown shall be verified by the Contractor prior to installation.
3. For conduit routing in electrical vault and TOS/COM, see sheet E-131.
4. Install 610 mm solid bottom tray with cover for routing to TOS/COM cables.
5. Install 610 mm ladder type for routing 600 V rated cable.
6. Install pull irons in all vaults, cast in each end wall.
7. Connect to transformer neutral. See panel schedule.

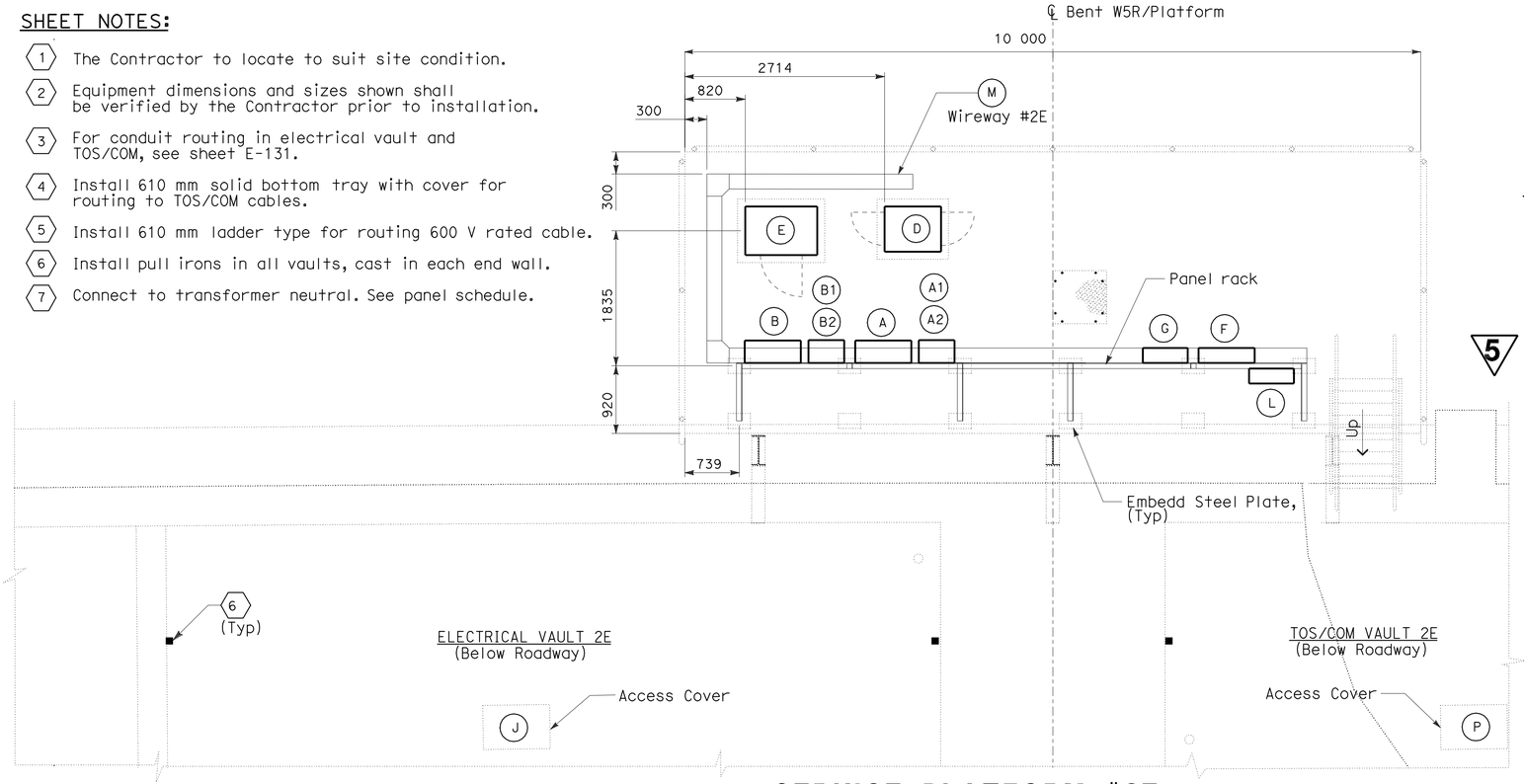

SERVICE PLATFORM #2E EQUIPMENT ARRANGEMENT PLAN

SCALE: 1:40

EQUIPMENT SCHEDULE: (2)

- (A) Utility Panel UP-202, 100 A 208/120 V, 3 Phase, 4 Wires (PB-8A).
- (A1) 15 kVA Transformer, 3 Phase, 4 Wires 480 V-208/120 V, 60 Hz. (Nema 4x) Size: 375 H x 485 W x 311 D.
- (A2) Enclosed molded case circuit breaker Size: 495 H x 232 W x 124 D.
- (B) Lighting Panel LP-217, 100 A, 208/120 V, 3 Phase, 4 Wires (PB-8A).
- (B1) 15 kVA Transformer, 3 Phase, 4 Wires 480 V-208/120 V, 60 Hz. (Nema 4x) Size: 375 H x 485 W x 311 D.
- (B2) Enclosed molded case circuit breaker Size: 495 H x 232 W x 124 D.
- (D) Controller Cabinet #TOS-02EA Size: 1625 H x 615 W x 768 D.
- (E) TOS Splice Cabinet TOS-02ES Size: 1400 H x 980 W x 660 D.
- (F) Scada Communication Terminal Box #COM-02E (PB-7B).
- (G) Telephone Terminal Box #TEL=02E (PB-7C).
- (L) PB-2B, mounted on panel rack.
- (M) 600 V, Wireway #2E, (Nema 4X) 203 H x 203 W.

MISCELLENEOUS:

- (J) Deck utility access opening and cover. Engraving "ELECTRICAL VAULT 2E". Refer to Structures plan sheets. miscellaneous suoerstructure details No. 2.
- (P) Deck utility access opening and cover. Engraving "TOS/COM VAULT 2E". Refer to Structures plan sheets. miscellaneous suoerstructure details No. 2.

NOTES:

1. For pull box schedule, refer to sheet E-109.
2. Conduit openings and locations through diaphragm, refer to structures sheets.
3. For details of embedd steel plates, refer to AS sheets.
4. Ground conductor routed outside or exposed shall be green insulated.
5. Conduits terminating inside vaults shall be provided with ground insulated bushing connected to ground bar.

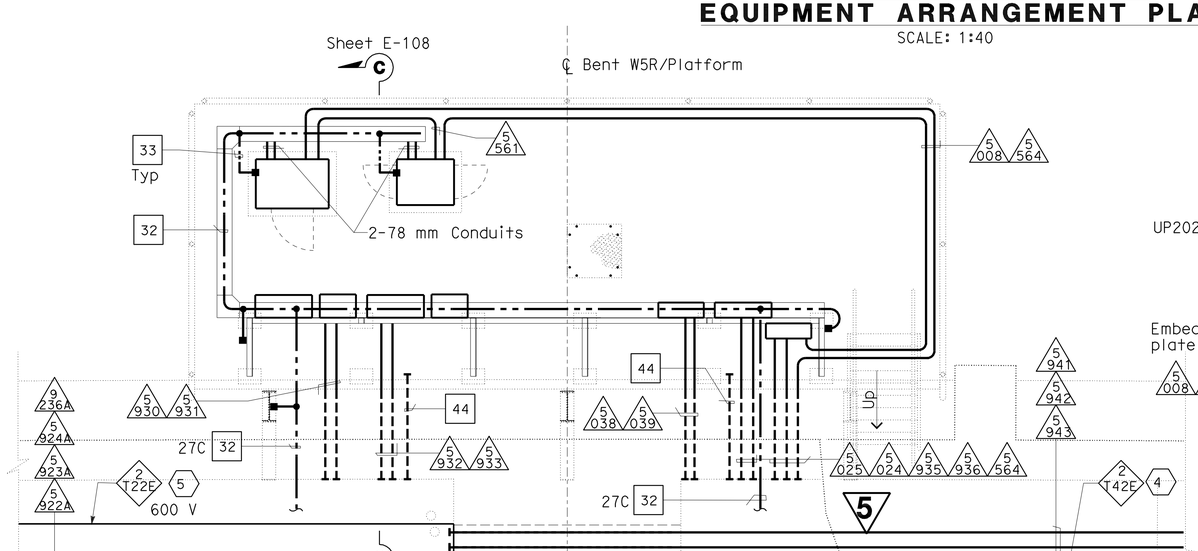

CONDUIT AND GROUNDING PLAN - EB (3)

SCALE: 1:40

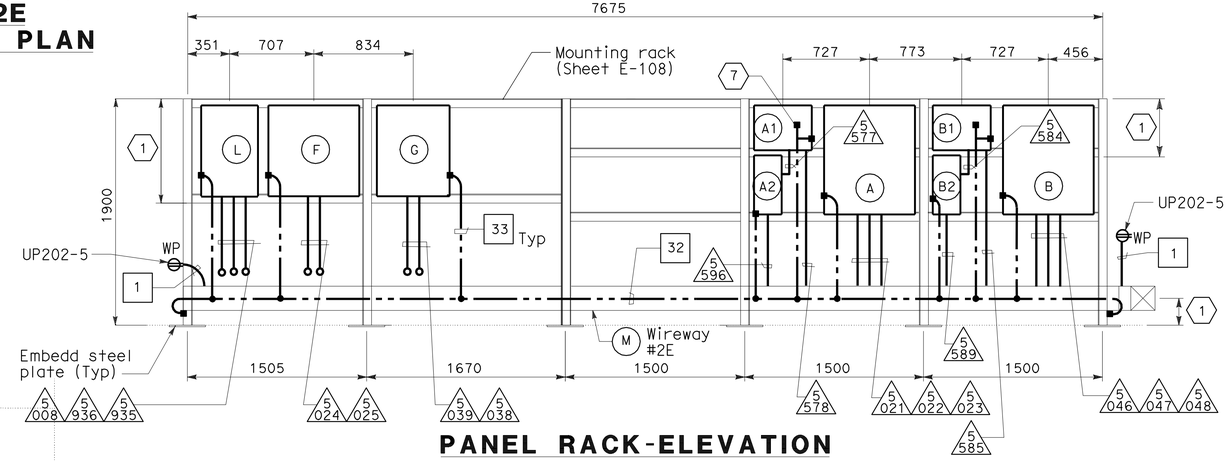

PANEL RACK-ELEVATION

SCALE: 1:25

DETAILS
YBI TRANSITION STRUCTURES ROADWAY EASTBOUND (PLATFORM 2E ARRANGEMENT AND PLAN)

SCALE AS NOTED

THIS PLAN IS ACCURATE FOR ELECTRICAL WORK ONLY.

ALL DIMENSIONS ARE IN MILLIMETERS UNLESS OTHERWISE SHOWN

5 REVISED PER ADDENDUM No. 5 DATED JULY 30, 2009

E-106

REVISED BY	DATE REVISED
FK	AB

CALCULATED-DESIGNED BY FK
CHECKED BY AB
CONSULTANT FUNCTIONAL SUPERVISOR BEHZAD GOLEMOHAMMADI

STATE OF CALIFORNIA - DEPARTMENT OF TRANSPORTATION
Caltrans

LAST REVISION 00-00-00
DATE PLOTTED => 28-JUL-2009
TIME PLOTTED => 06:25

Dist	COUNTY	ROUTE	KILOMETER POST TOTAL PROJECT	SHEET No.	TOTAL SHEETS
04	SF	80	12.7/13.2	235	806

REGISTERED ELECTRICAL ENGINEER — 2/14/08 DATE

6-23-08
PLANS APPROVAL DATE

REGISTERED PROFESSIONAL ENGINEER — FADI WALIEDDINE No. 11465 Exp. 12/31/09 ELECTRICAL — STATE OF CALIFORNIA

THE STATE OF CALIFORNIA OR ITS OFFICERS OR AGENTS SHALL NOT BE RESPONSIBLE FOR THE ACCURACY OR COMPLETENESS OF ELECTRONIC COPIES OF THIS PLAN SHEET.

PB AMERICAS, Inc.
A Parsons Brinckerhoff Company
303 Second St., Suite 700N
San Francisco, CA 94107-1317

Caltrans Metric

LIGHTING PANEL LP-218 (CKT.#2102)

LOCATION: TRANSITION STRUCTURE SERVICE PLATFORM #3E

LOAD DESCRIPTION	LTG	CB		CB	LTG	LOAD DESCRIPTION
Bike Path Lighting (10)	590	20/1	1 A 2	20/1	708	Bike Path Lighting (12)
Bike Path Lighting (10) 5	590	20/1	3 B 4	20/1	708	Bike Path Lighting (12)
Bike Path Lighting (8)	472	20/1	5 C 6	20/1	708	Bike Path Lighting (12)
Spare		20/1	7 A 8	20/1		Spare
↓		20/1	9 B 10	20/1		↓
↓		20/1	11 C 12	20/1		↓
TOTAL VA	1652	5			2124	TOTAL VA

LOAD SUMMARY (INCLUDES .90PF) (VA)
Lighting (At 100%): 3776
5
TOTAL kVA: 3.776

BALANCE (KVA)
Phase A - 1.298
Phase B - 1.298
Phase C - 1.180
5

VOLTAGE: 208/120 V
PHASE/WIRES: 3-Phase, 4-Wire
BUS RATING: 100 A
MAIN: 60 A
MOUNTING: SURFACE
K.A.I.C.: 10

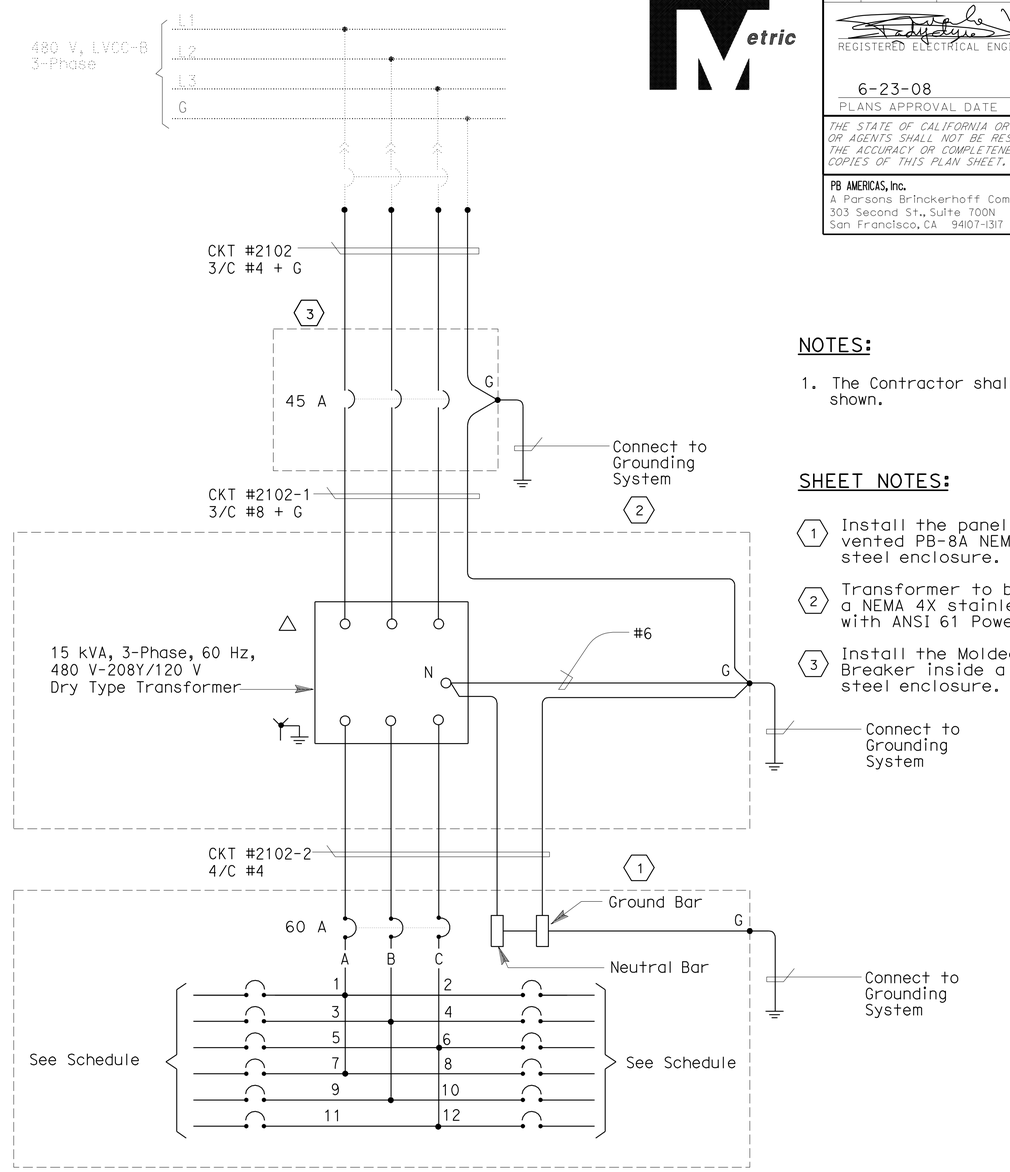

NOTES:

1. The Contractor shall provide nameplates as shown.

SHEET NOTES:

1. Install the panel board inside a vented PB-8A NEMA 4X stainless steel enclosure.
2. Transformer to be furnished with a NEMA 4X stainless steel enclosure with ANSI 61 Power Coat.
3. Install the Molded Case Circuit Breaker inside a NEMA 4X stainless steel enclosure.

5 **REVISED PER ADDENDUM No. 5 DATED JULY 30, 2009**

DETAILS
YBI TRANSITION STRUCTURES ROADWAY EASTBOUND (PANEL LP-218 SCHEDULE)
NO SCALE

E-116

THIS PLAN ACCURATE FOR ELECTRICAL WORK ONLY.

REVISED BY | DATE REVISED
FK | AB
CALCULATED-DESIGNED BY | CHECKED BY
CONSULTANT FUNCTIONAL SUPERVISOR
BEHZAD GOLEMOHAMMADI
STATE OF CALIFORNIA - DEPARTMENT OF TRANSPORTATION
Caltrans

LAST REVISION 00-00-00 | DATE PLOTTED => 28-JUL-2009 | TIME PLOTTED => 06:25

Dist	COUNTY	ROUTE	KILOMETER POST TOTAL PROJECT	SHEET No.	TOTAL SHEETS
04	SF	80	12.7/13.2	238	806

2/14/08
REGISTERED ELECTRICAL ENGINEER

6-23-08
PLANS APPROVAL DATE

REGISTERED PROFESSIONAL ENGINEER
FADI WALIEDDINE
No. 11465
Exp. 12/31/09
ELECTRICAL
STATE OF CALIFORNIA

THE STATE OF CALIFORNIA OR ITS OFFICERS OR AGENTS SHALL NOT BE RESPONSIBLE FOR THE ACCURACY OR COMPLETENESS OF ELECTRONIC COPIES OF THIS PLAN SHEET.

PB AMERICAS, Inc.
A Parsons Brinckerhoff Company
303 Second St., Suite 700N
San Francisco, CA 94107-1317

Caltrans Metric

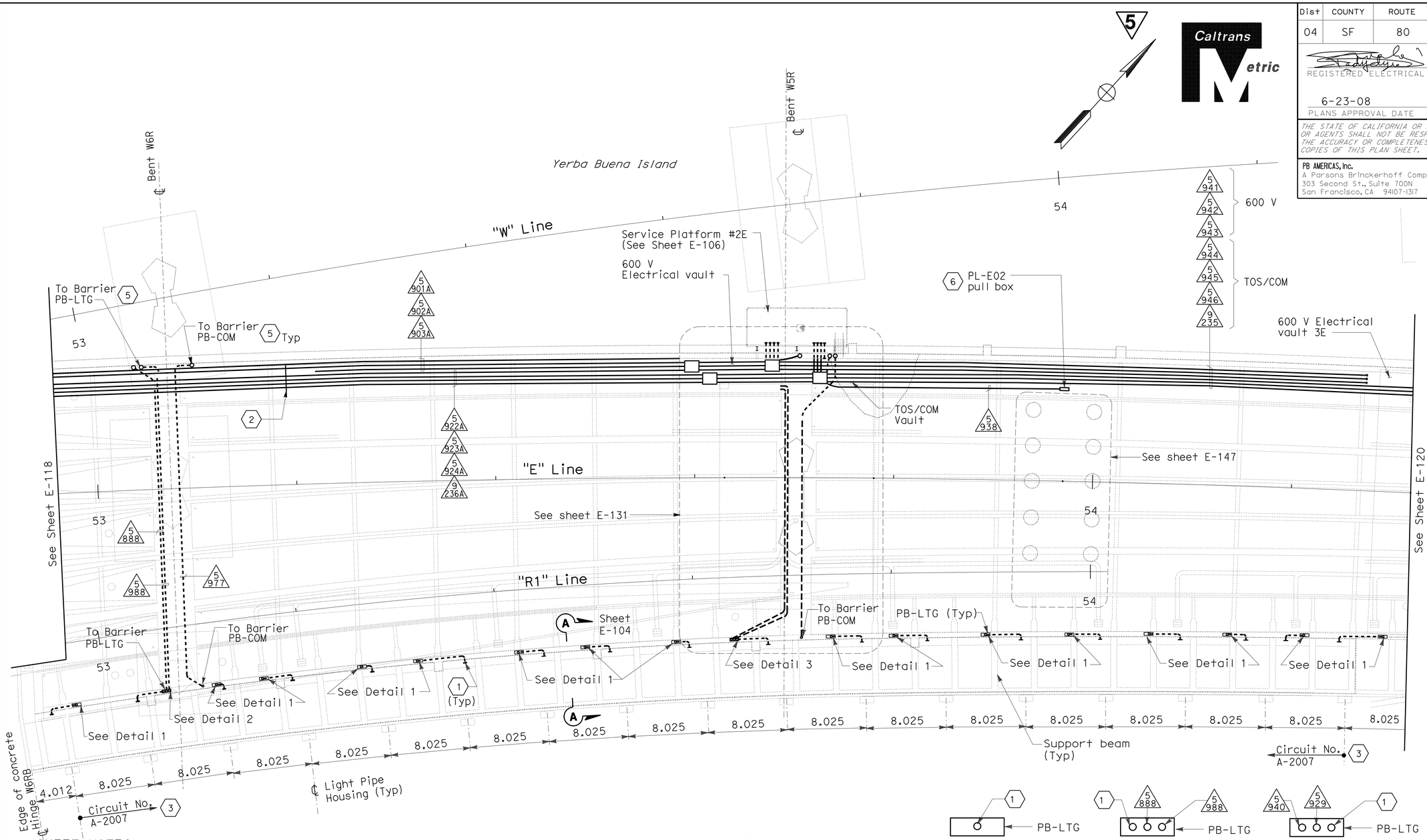

CONDUIT PLAN

DETAIL 1 **DETAIL 2** **DETAIL 3**

SHEET NOTES:

1. Provide cap at end of conduit, see Section A-A sheet E-104.
2. For typical details of conduit & pull box support, see sheet E-124.
3. For 480 V light pipe wiring diagram, see sheet E-125.
4. ~~Embedded conduit stub-down for future light pipe connection. See sheet E-104.~~
5. For conduit up to PB-LTG and PB-COM located in barrier, see sheet E-92.
6. For details, see sheet E-147.

YBI TRANSITION STRUCTURES GIRDER EASTBOUND
(LIGHTING AND ELECTRICAL SYSTEMS)

SCALE: 1:200

5 **REVISED PER ADDENDUM No. 5 DATED JULY 30, 2009**

E-119

THIS PLAN IS ACCURATE FOR ELECTRICAL WORK ONLY.

ALL DIMENSIONS ARE IN METERS UNLESS OTHERWISE SHOWN

STATE OF CALIFORNIA - DEPARTMENT OF TRANSPORTATION
Caltrans

CONSULTANT FUNCTIONAL SUPERVISOR: BEHZAD GOLEMOHAMMADI
CALCULATED-DESIGNED BY: FK
CHECKED BY: AB
REVISED BY
DATE REVISED

LAST REVISION 00-00-00
DATE PLOTTED => 28-JUL-2009
TIME PLOTTED => 06:25

Dist	COUNTY	ROUTE	KILOMETER POST TOTAL PROJECT	SHEET No.	TOTAL SHEETS
04	SF	80	12.7/13.2	239	806

2/14/08
REGISTERED ELECTRICAL ENGINEER

6-23-08
PLANS APPROVAL DATE

REGISTERED PROFESSIONAL ENGINEER
FADI WALIEDDINE
No. 11465
Exp. 12/31/09
ELECTRICAL
STATE OF CALIFORNIA

THE STATE OF CALIFORNIA OR ITS OFFICERS OR AGENTS SHALL NOT BE RESPONSIBLE FOR THE ACCURACY OR COMPLETENESS OF ELECTRONIC COPIES OF THIS PLAN SHEET.

PB AMERICAS, Inc.
A Parsons Brinckerhoff Company
303 Second St., Suite 700N
San Francisco, CA 94107-1317

Caltrans Metric

5

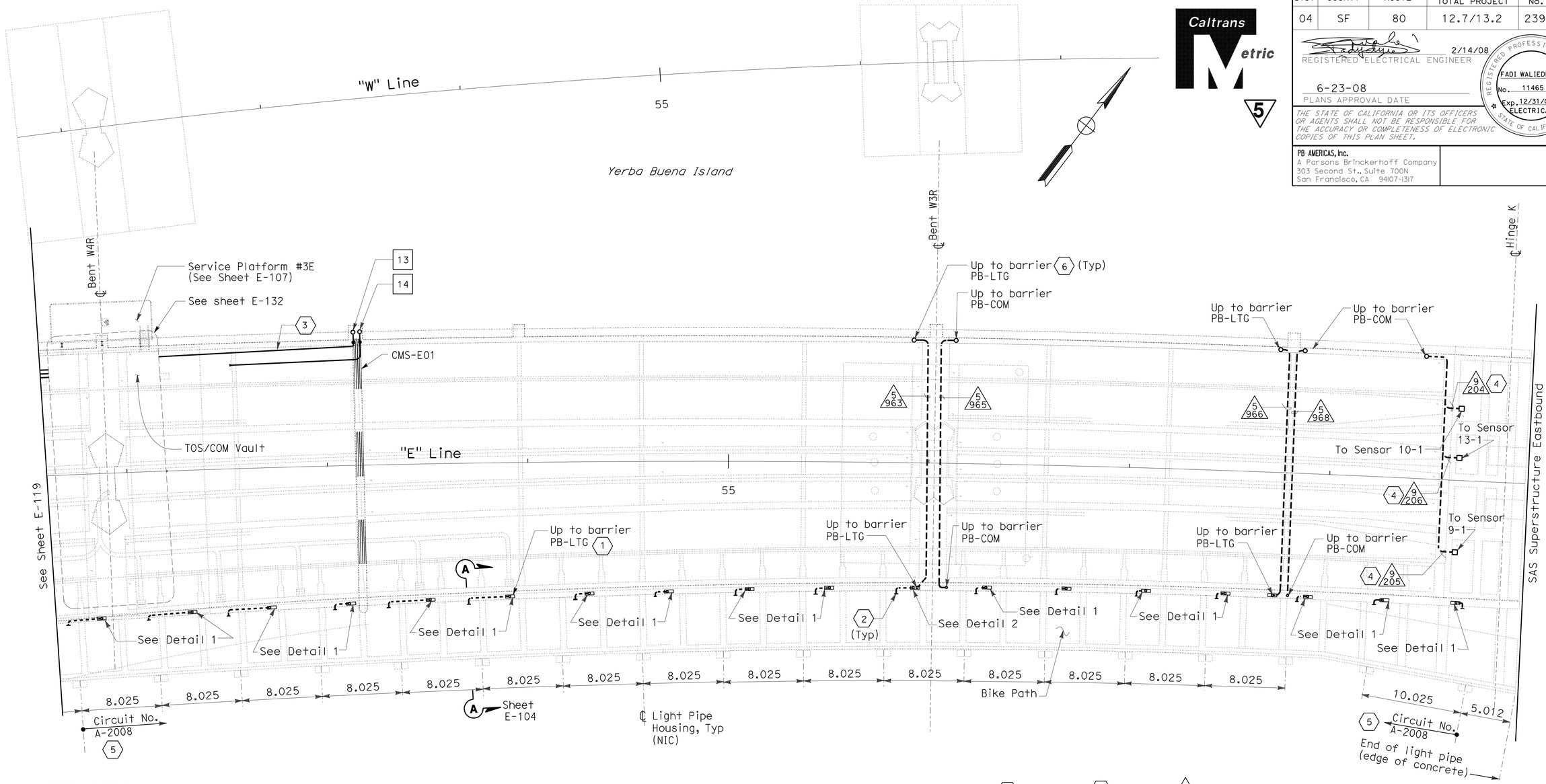

SHEET NOTES:

1. For conduit up to barrier PB-LTG for light pipe.
2. Provide cap at end of conduit, see Section A-A sheet E-104.
3. For typical details of conduit & pull box support, see sheet E-124.
4. Conduits to be installed in this contract but are reserved for SMD.
5. For 480 V light pipe wiring diagram, see sheet E-125.
6. For conduit up to PB-LTG and PB-COM located in barrier, see sheet E-93.

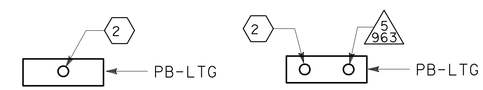

DETAIL 1 **DETAIL 2**

CONDUIT PLAN

YBI TRANSITION STRUCTURES GIRDER EASTBOUND
(LIGHTING AND ELECTRICAL SYSTEMS)

SCALE: 1:200

5 **REVISED PER ADDENDUM No. 5 DATED JULY 30, 2009**

E-120

THIS PLAN IS ACCURATE FOR ELECTRICAL WORK ONLY.

ALL DIMENSIONS ARE IN METERS UNLESS OTHERWISE SHOWN

STATE OF CALIFORNIA - DEPARTMENT OF TRANSPORTATION
Caltrans

CONSULTANT FUNCTIONAL SUPERVISOR: BEHZAD GOLEMOHAMMADI
CALCULATED-DESIGNED BY: FK
CHECKED BY: AB
REVISED BY
DATE REVISED

LAST REVISION 00-00-00
DATE PLOTTED => 28-JUL-2009
TIME PLOTTED => 06:26

Dist	COUNTY	ROUTE	KILOMETER POST TOTAL PROJECT	SHEET No.	TOTAL SHEETS
04	SF	80	12.7/13.2	244A	806

REGISTERED ELECTRICAL ENGINEER 2/14/08

6-23-08
PLANS APPROVAL DATE

REGISTERED PROFESSIONAL ENGINEER FADI WALIEDDINE No. 11465 Exp. 12/31/09 ELECTRICAL STATE OF CALIFORNIA

THE STATE OF CALIFORNIA OR ITS OFFICERS OR AGENTS SHALL NOT BE RESPONSIBLE FOR THE ACCURACY OR COMPLETENESS OF ELECTRONIC COPIES OF THIS PLAN SHEET.

PB AMERICAS, Inc.
A Parsons Brinckerhoff Company
303 Second St., Suite 700N
San Francisco, CA 94107-1317

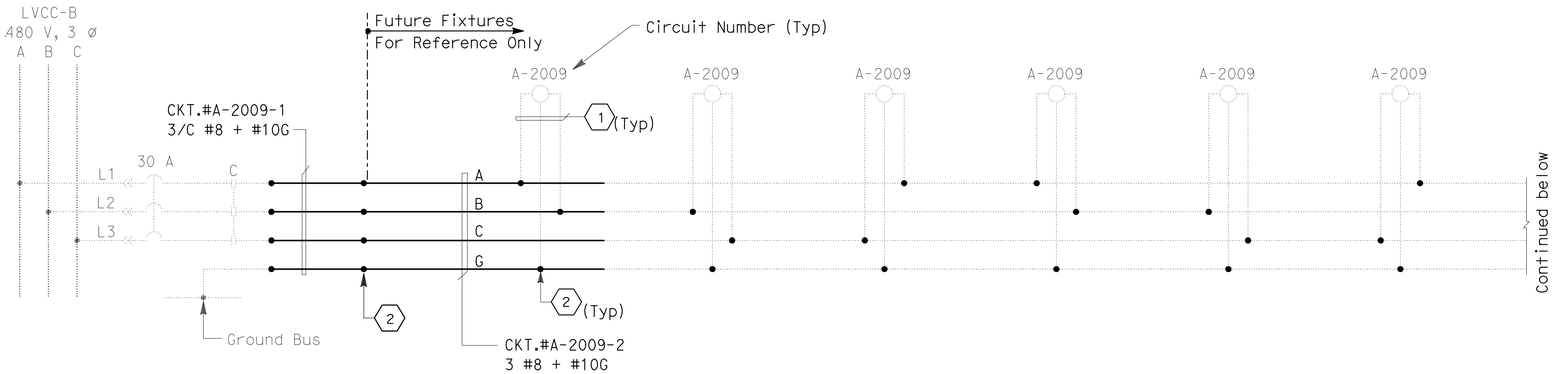

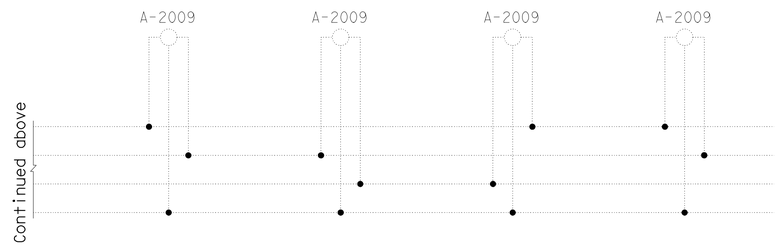

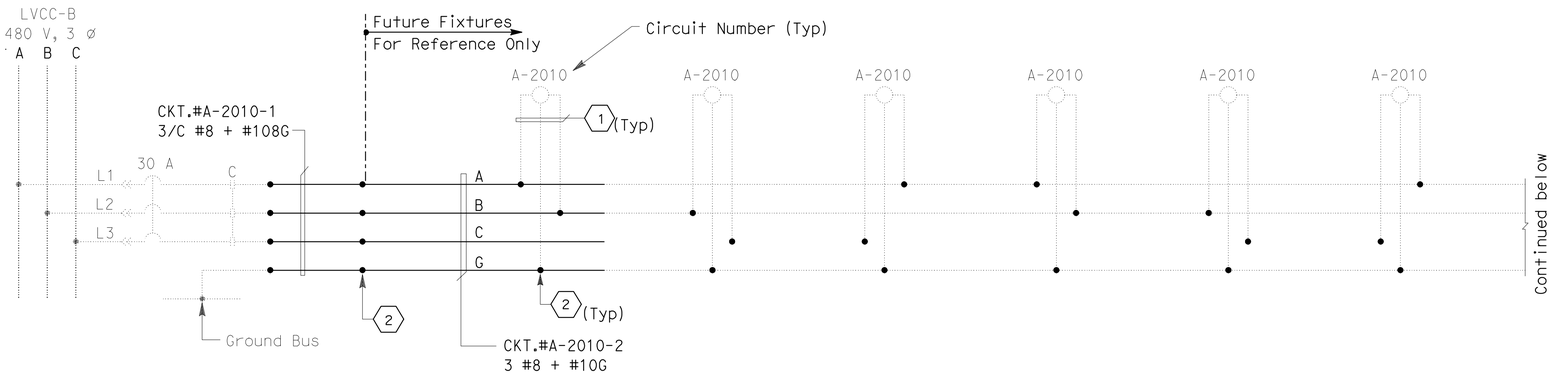

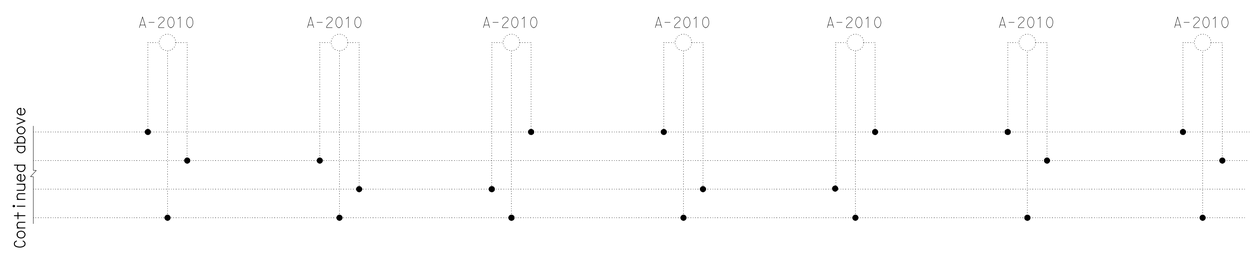

SHEET NOTES:

1. 3 #10 AWG single conductors.
2. Conductors spliced inside PB-LTG.

NOTES:

1. References:
   - For LVCC-B single line diagram, see sheet E-44.
   - For pull box schedule, see sheet E-109.
   - For light pipe schedules, see sheet E-134.

DETAILS
YBI STRUCTURE GIRDER EASTBOUND
480 V LIGHT PIPE WIRING DIAGRAM
NO SCALE

5 ADDED PER ADDENDUM No. 5 DATED JULY 30, 2009

THIS PLAN ACCURATE FOR ELECTRICAL WORK ONLY.

E-125A

REVISED BY	DATE REVISED

CALCULATED-DESIGNED BY	CHECKED BY
FK	AB

CONSULTANT FUNCTIONAL SUPERVISOR: BEHZAD GOLEMOHAMMADI

STATE OF CALIFORNIA - DEPARTMENT OF TRANSPORTATION

Caltrans

LAST REVISION 00-00-00 | DATE PLOTTED => 28-JUL-2009 | TIME PLOTTED => 06:26

Dist	COUNTY	ROUTE	KILOMETER POST TOTAL PROJECT	SHEET No.	TOTAL SHEETS
04	SF	80	12.7/13.2	244	806

REGISTERED ELECTRICAL ENGINEER 2/14/08

6-23-08
PLANS APPROVAL DATE

REGISTERED PROFESSIONAL ENGINEER FADI WALIEDDINE No. 11465 Exp. 12/31/09 ELECTRICAL STATE OF CALIFORNIA

THE STATE OF CALIFORNIA OR ITS OFFICERS OR AGENTS SHALL NOT BE RESPONSIBLE FOR THE ACCURACY OR COMPLETENESS OF ELECTRONIC COPIES OF THIS PLAN SHEET.

PB AMERICAS, Inc.
A Parsons Brinckerhoff Company
303 Second St., Suite 700N
San Francisco, CA 94107-1317

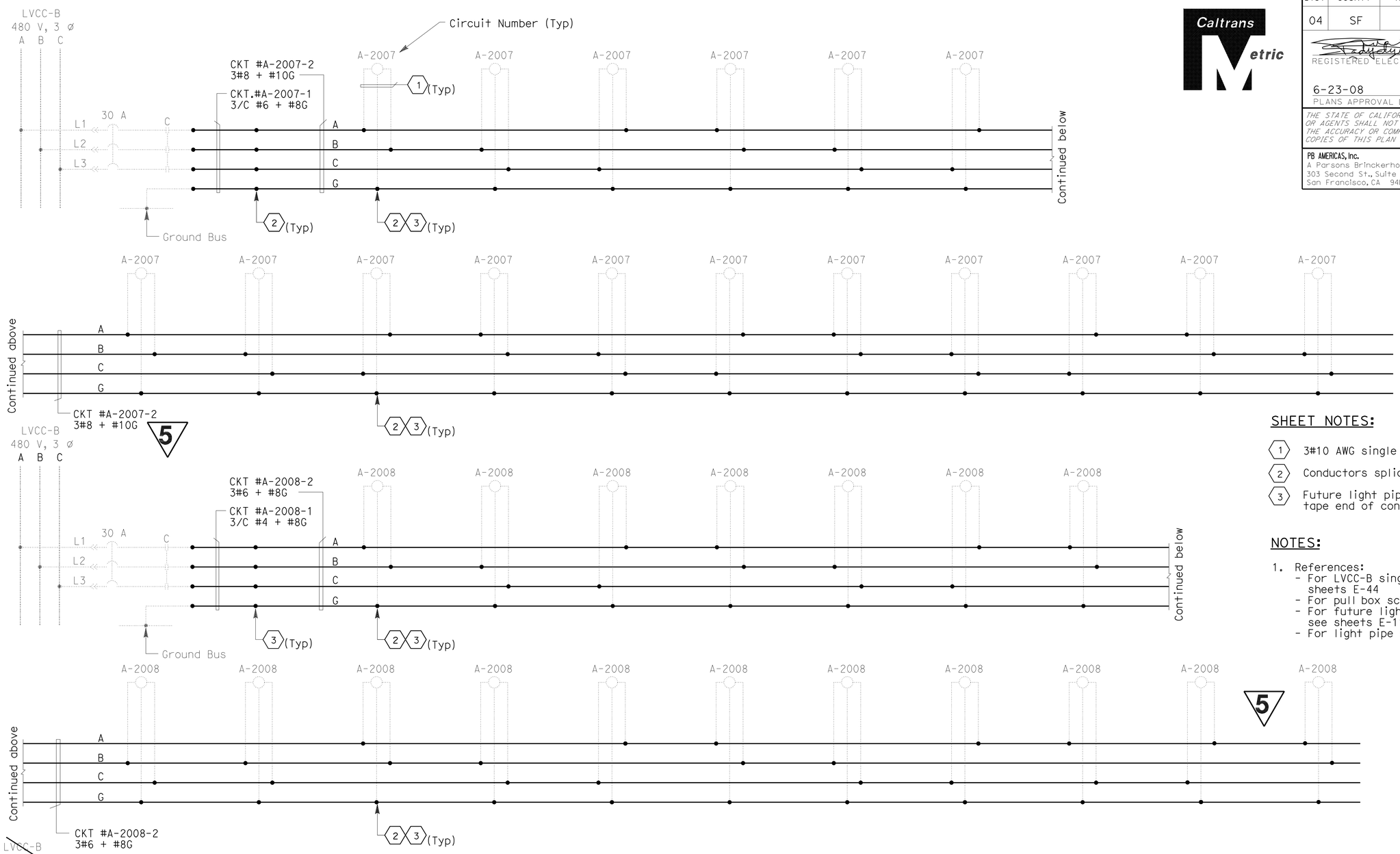

SHEET NOTES:

(1) 3#10 AWG single conductors

(2) Conductors spliced inside PB-LTG.

(3) Future light pipe connections. Coil and tape end of conductors in pull box PB-LTG.

NOTES:

1. References:
   - For LVCC-B single line diagram, see sheets E-44
   - For pull box schedule, see sheet E-109.
   - For future light pipe plan, see sheets E-119 and E-120.
   - For light pipe schedules, see sheet E-134.

DETAILS
YBI TRANSITION STRUCTURES GIRDER EASTBOUND (480 V LIGHT PIPE WIRING DIAGRAM)

NO SCALE

5 REVISED PER ADDENDUM No. 5 DATED JULY 30, 2009

THIS PLAN ACCURATE FOR ELECTRICAL WORK ONLY.

E-125

REVISED BY	DATE REVISED
FK	AB

CALCULATED-DESIGNED BY	CHECKED BY

CONSULTANT FUNCTIONAL SUPERVISOR: BEHZAD GOLEMOHAMMADI

STATE OF CALIFORNIA - DEPARTMENT OF TRANSPORTATION

Caltrans

LAST REVISION 00-00-00 DATE PLOTTED => 28-JUL-2009 TIME PLOTTED => 06:26

Dist	COUNTY	ROUTE	KILOMETER POST TOTAL PROJECT	SHEET No.	TOTAL SHEETS
04	SF	80	12.7/13.2	249	806

REGISTERED ELECTRICAL ENGINEER 2/14/08

6-23-08
PLANS APPROVAL DATE

REGISTERED PROFESSIONAL ENGINEER FADI WALIEDDINE No. 11465 Exp. 12/31/09 ELECTRICAL STATE OF CALIFORNIA

THE STATE OF CALIFORNIA OR ITS OFFICERS OR AGENTS SHALL NOT BE RESPONSIBLE FOR THE ACCURACY OR COMPLETENESS OF ELECTRONIC COPIES OF THIS PLAN SHEET.

PB AMERICAS, Inc.
A Parsons Brinckerhoff Company
303 Second St., Suite 700N
San Francisco, CA 94107-1317

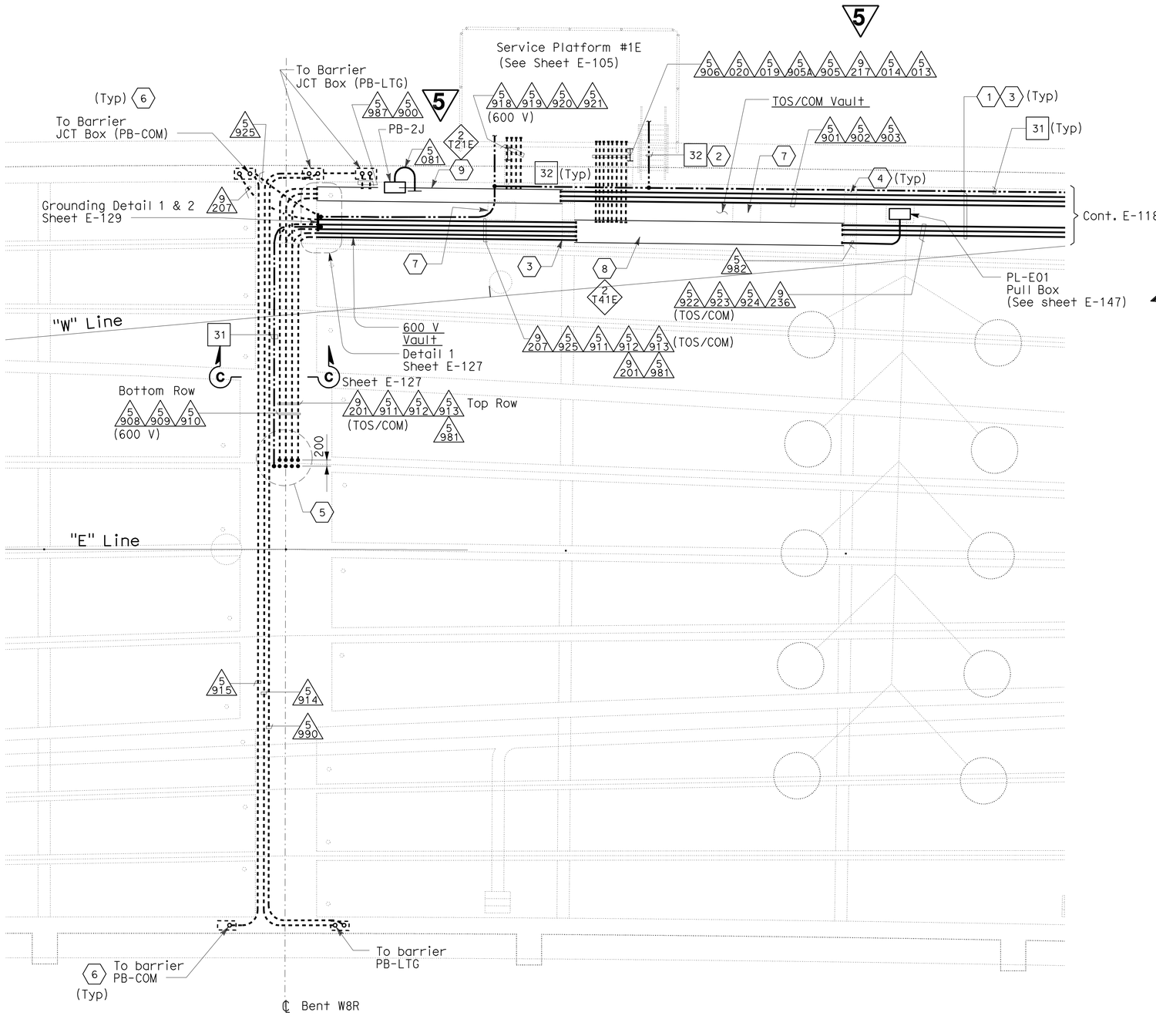

SHEET NOTES:

1. For conduit routing in girder see sheet E-118.
2. For Typical Grounding Installation, see sheet E-129.
3. For conduit support, see sheet E-124.
4. Opening for conduits, refer to Structures sheets.
5. For embedded conduits in column, see sheet E-127.
6. For conduit up to PB-LTG & PB-COM, see sheet E-91.
7. Roadway deck access (vault) opening required. See structures sheets. Access cover engraving "ELECTRICAL" and "TOS/COM".
8. Install 610 mm solid bottom tray with cover for routing TOS/COM cables, see E-124, Detail 1.
9. Install 610 mm ladder type tray for routing 600 V rated cable, see E-124, Detail 1.

NOTES:

1. References:
   - For embedded conduit layout, see sheets E-121 thru E-123.

DETAILS
YBI TRANSITION STRUCTURES GIRDER EASTBOUND (VAULT SECTIONS AND DETAILS)
SCALE: 1:75

5 REVISED PER ADDENDUM No. 5 DATED JULY 30, 2009

THIS PLAN ACCURATE FOR ELECTRICAL WORK ONLY.

ALL DIMENSIONS ARE IN MILLIMETERS UNLESS OTHERWISE SHOWN

E-130

REVISED BY	DATE REVISED
FK	AB

CALCULATED-DESIGNED BY / CHECKED BY

CONSULTANT FUNCTIONAL SUPERVISOR: BEHZAD GOLEMOHAMMADI

STATE OF CALIFORNIA - DEPARTMENT OF TRANSPORTATION

Caltrans

LAST REVISION 00-00-00 | DATE PLOTTED => 28-JUL-2009 | TIME PLOTTED => 06:26

Dist	COUNTY	ROUTE	KILOMETER POST TOTAL PROJECT	SHEET No.	TOTAL SHEETS
04	SF	80	12.7/13.2	253	806

2/14/08
REGISTERED ELECTRICAL ENGINEER

6-23-08
PLANS APPROVAL DATE

REGISTERED PROFESSIONAL ENGINEER
FADI WALIEDDINE
No. 11465
Exp. 12/31/09
ELECTRICAL
STATE OF CALIFORNIA

THE STATE OF CALIFORNIA OR ITS OFFICERS OR AGENTS SHALL NOT BE RESPONSIBLE FOR THE ACCURACY OR COMPLETENESS OF ELECTRONIC COPIES OF THIS PLAN SHEET.

PB AMERICAS, Inc.
A Parsons Brinckerhoff Company
303 Second St., Suite 700N
San Francisco, CA 94107-1317

LIGHT PIPE SCHEDULE (2)

Circuit Number	Location: Reference (1)	Location: Bikepath side	Mounting	Ltg. Fixture Type	Number/ Wattage	Remarks
A-2007	E-119	South	Bracket Mtd.	YAL	1-400 W	with Remote Ballast
A-2007	E-119	South	Bracket Mtd.	YAL	1-400 W	with Remote Ballast
A-2007	E-119	South	Bracket Mtd.	YAL	1-400 W	with Remote Ballast
A-2007	E-119	South	Bracket Mtd.	YAL	1-400 W	with Remote Ballast
A-2007	E-119	South	Bracket Mtd.	YAL	1-400 W	with Remote Ballast
A-2007	E-119	South	Bracket Mtd.	YAL	1-400 W	with Remote Ballast
A-2007	E-119	South	Bracket Mtd.	YAL	1-400 W	with Remote Ballast
A-2007	E-119	South	Bracket Mtd.	YAL	1-400 W	with Remote Ballast
A-2007	E-119	South	Bracket Mtd.	YAL	1-400 W	with Remote Ballast
A-2007	E-119	South	Bracket Mtd.	YAL	1-400 W	with Remote Ballast
A-2007	E-119	South	Bracket Mtd.	YAL	1-400 W	with Remote Ballast
A-2007	E-119	South	Bracket Mtd.	YAL	1-400 W	with Remote Ballast
A-2007	E-119	South	Bracket Mtd.	YAL	1-400 W	with Remote Ballast
A-2007	E-119	South	Bracket Mtd.	YAL	1-400 W	with Remote Ballast
A-2007	E-119	South	Bracket Mtd.	YAL	1-400 W	with Remote Ballast
A-2007	E-119	South	Bracket Mtd.	YAL	1-400 W	with Remote Ballast
A-2008	E-120	South	Bracket Mtd.	YAL	1-400 W	with Remote Ballast
A-2008	E-120	South	Bracket Mtd.	YAL	1-400 W	with Remote Ballast
A-2008	E-120	South	Bracket Mtd.	YAL	1-400 W	with Remote Ballast
A-2008	E-120	South	Bracket Mtd.	YAL	1-400 W	with Remote Ballast
A-2008	E-120	South	Bracket Mtd.	YAL	1-400 W	with Remote Ballast
A-2008	E-120	South	Bracket Mtd.	YAL	1-400 W	with Remote Ballast
A-2008	E-120	South	Bracket Mtd.	YAL	1-400 W	with Remote Ballast
A-2008	E-120	South	Bracket Mtd.	YAL	1-400 W	with Remote Ballast
A-2008	E-120	South	Bracket Mtd.	YAL	1-400 W	with Remote Ballast
A-2008	E-120	South	Bracket Mtd.	YAL	1-400 W	with Remote Ballast
A-2008	E-120	South	Bracket Mtd.	YAL	1-400 W	with Remote Ballast
A-2008	E-120	South	Bracket Mtd.	YAL	1-400 W	with Remote Ballast
A-2008	E-120	South	Bracket Mtd.	YAL	1-400 W	with Remote Ballast
A-2008	E-120	South	Bracket Mtd.	YAL	1-400 W	with Remote Ballast
A-2008	E-120	South	Bracket Mtd.	YAL	1-400 W	with Remote Ballast
A-2008	E-120	South	Bracket Mtd.	YAL	1-400 W	with Remote Ballast
A-2008	E-120	South	Bracket Mtd.	YAL	1-400 W	with Remote Ballast
A-2008	E-120	South	Bracket Mtd.	YAL	1-400 W	with Remote Ballast

(2)

LIGHT PIPE SCHEDULE (2)

Circuit Number	Location: Reference	Location: Bikepath side	Mounting	Ltg. Fixture Type	Number/ Wattage	Remarks
A-2009		South	Bracket Mtd.	YAL	1-400 W	with Remote Ballast
A-2009		South	Bracket Mtd.	YAL	1-400 W	with Remote Ballast
A-2009		South	Bracket Mtd.	YAL	1-400 W	with Remote Ballast
A-2009		South	Bracket Mtd.	YAL	1-400 W	with Remote Ballast
A-2009		South	Bracket Mtd.	YAL	1-400 W	with Remote Ballast
A-2009		South	Bracket Mtd.	YAL	1-400 W	with Remote Ballast
A-2009		South	Bracket Mtd.	YAL	1-400 W	with Remote Ballast
A-2009		South	Bracket Mtd.	YAL	1-400 W	with Remote Ballast
A-2009		South	Bracket Mtd.	YAL	1-400 W	with Remote Ballast
A-2009		South	Bracket Mtd.	YAL	1-400 W	with Remote Ballast
A-2010		South	Bracket Mtd.	YAL	1-400 W	with Remote Ballast
A-2010		South	Bracket Mtd.	YAL	1-400 W	with Remote Ballast
A-2010		South	Bracket Mtd.	YAL	1-400 W	with Remote Ballast
A-2010		South	Bracket Mtd.	YAL	1-400 W	with Remote Ballast
A-2010		South	Bracket Mtd.	YAL	1-400 W	with Remote Ballast
A-2010		South	Bracket Mtd.	YAL	1-400 W	with Remote Ballast
A-2010		South	Bracket Mtd.	YAL	1-400 W	with Remote Ballast
A-2010		South	Bracket Mtd.	YAL	1-400 W	with Remote Ballast
A-2010		South	Bracket Mtd.	YAL	1-400 W	with Remote Ballast
A-2010		South	Bracket Mtd.	YAL	1-400 W	with Remote Ballast

(2)

SHEET NOTES:

(1) Approximate location of light pipe lamp housing.

(2) Light pipe shown for reference only. Provisions for circuit for future use, see wiring diagram sheet E-125A.

NOTES:

1. References:
   - For circuit numbers, see single line diagram E-125 and 125A.
2. Light pipe lighting fixture type YAL are not supplied under this contract.
3. For fixture descriptions and specifications, see Electrical Special Provisions.

(5) **REVISED PER ADDENDUM No. 5 DATED JULY 30, 2009**

YBI TRANSITION STRUCTURES GIRDER EASTBOUND (LIGHT PIPE SCHEDULE)

NO SCALE

E-134

THIS PLAN ACCURATE FOR ELECTRICAL WORK ONLY.

REVISED BY | DATE REVISED
FK | AB
CALCULATED-DESIGNED BY | CHECKED BY
CONSULTANT FUNCTIONAL SUPERVISOR
BEHZAD GOLEMOHAMMADI
STATE OF CALIFORNIA - DEPARTMENT OF TRANSPORTATION
Caltrans

LAST REVISION 00-00-00 | DATE PLOTTED => 28-JUL-2009 | TIME PLOTTED => 06:27

Dist	COUNTY	ROUTE	KILOMETER POST TOTAL PROJECT	SHEET No.	TOTAL SHEETS
04	SF	80	12.7/13.2	260	806

REGISTERED ELECTRICAL ENGINEER 2/14/08

6-23-08
PLANS APPROVAL DATE

REGISTERED PROFESSIONAL ENGINEER FADI WALIEDDINE No. 11465 Exp. 12/31/09 ELECTRICAL STATE OF CALIFORNIA

THE STATE OF CALIFORNIA OR ITS OFFICERS OR AGENTS SHALL NOT BE RESPONSIBLE FOR THE ACCURACY OR COMPLETENESS OF ELECTRONIC COPIES OF THIS PLAN SHEET.

PB AMERICAS, Inc.
A Parsons Brinckerhoff Company
303 Second St., Suite 700N
San Francisco, CA 94107-1317

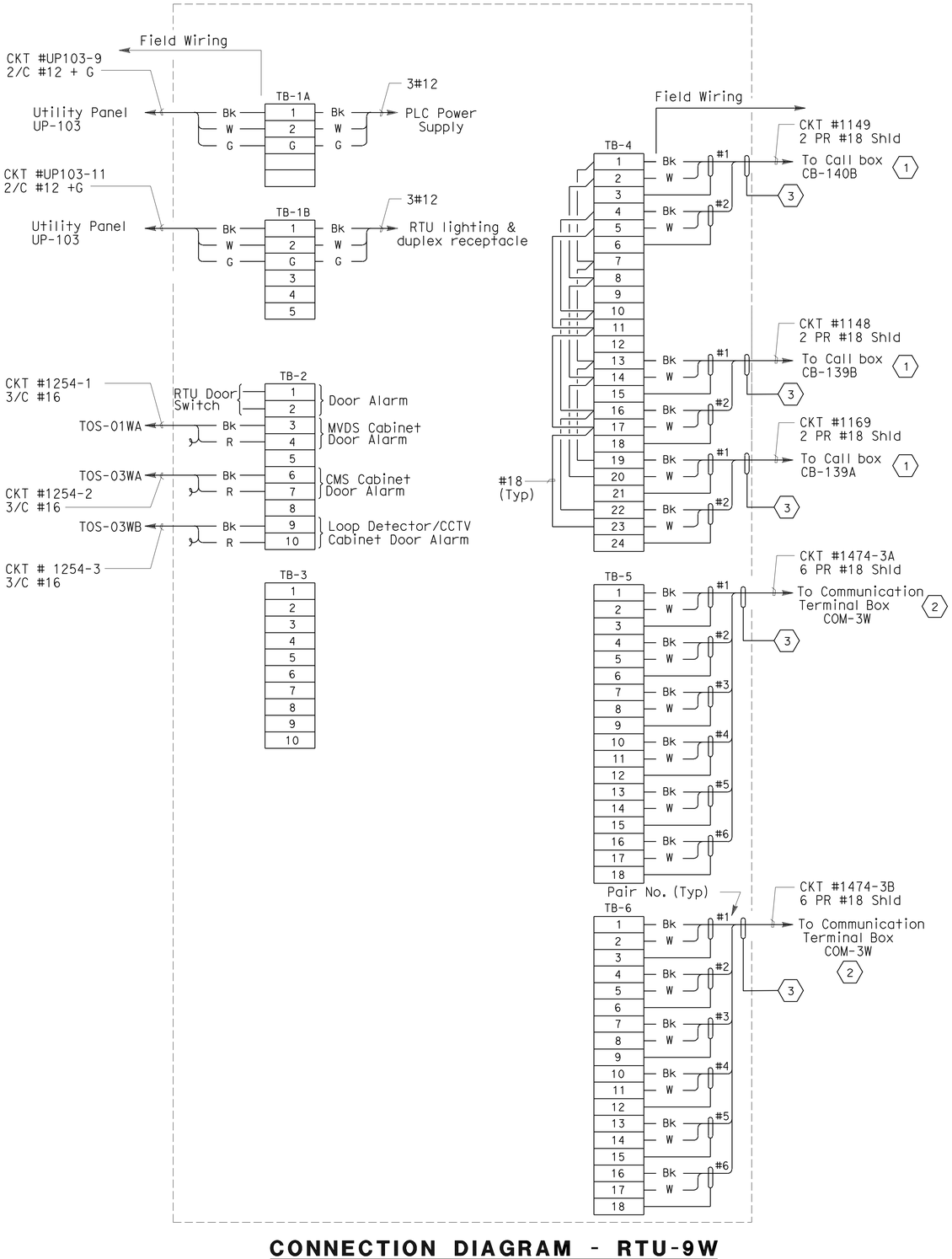

CONNECTION DIAGRAM - RTU-9W

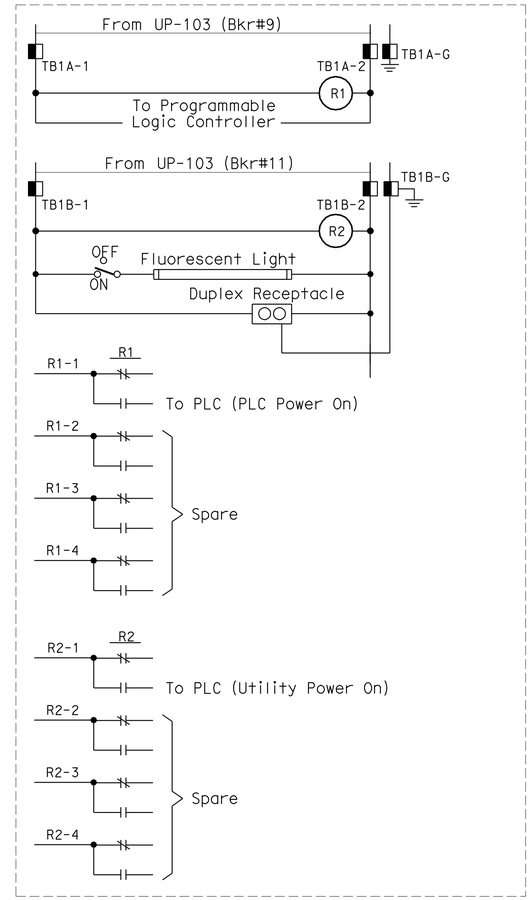

ELEMENTARY DIAGRAM - RTU-9W

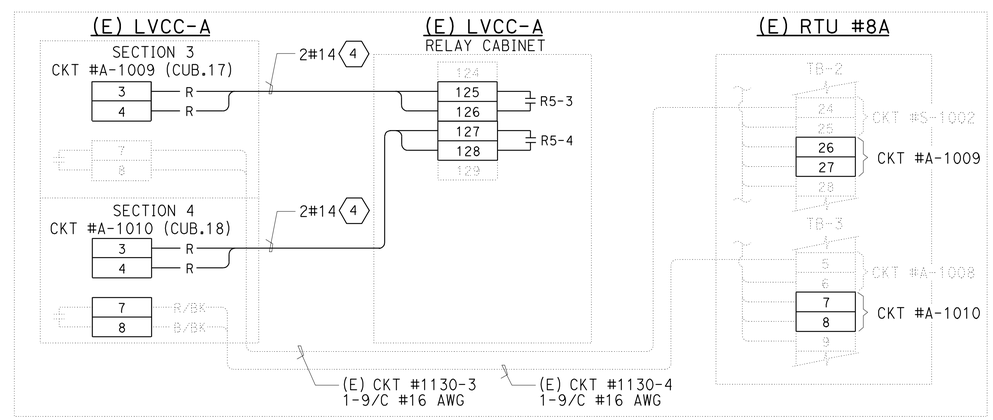

CONNECTION DIAGRAM

INSIDE EXISTING YBI SUBSTATION

SHEET NOTES:

1. For connection to call boxes, see sheet E-170.
2. For connection diagram to scada system, see sheet E-143.
3. Field to tape cable overall shield wire.
4. Add wiring inside LVCC-A line up.

NOTES:

1. All spare conductors shall be coiled and taped at conductor ends unless terminated.
2. Terminate cable shields to low level ground bus.
3. References:
   - For UP-103 panel schedule, see sheet E-71.
   - For RTU-9W panel layout, see sheet E-139.

DETAILS

SCADA REMOTE TERMINAL UNIT SYSTEM (RTU-9W ELEMENTARY AND CONNECTION DIAGRAM)

NO SCALE

5 REVISED PER ADDENDUM No. 5 DATED JULY 30, 2009

THIS PLAN ACCURATE FOR ELECTRICAL WORK ONLY.

E-141

STATE OF CALIFORNIA - DEPARTMENT OF TRANSPORTATION
Caltrans

CONSULTANT FUNCTIONAL SUPERVISOR: BEHZAD GOLEMOHAMMADI
CALCULATED-DESIGNED BY: EDC
CHECKED BY: CYF
REVISED BY
DATE REVISED

LAST REVISION 00-00-00
DATE PLOTTED => 28-JUL-2009
TIME PLOTTED => 06:27

Dist	COUNTY	ROUTE	KILOMETER POST TOTAL PROJECT	SHEET No.	TOTAL SHEETS
04	SF	80	12.7/13.2	261	806

REGISTERED ELECTRICAL ENGINEER 2/14/08

6-23-08
PLANS APPROVAL DATE

REGISTERED PROFESSIONAL ENGINEER FADI WALIEDDINE No. 11465 Exp. 12/31/09 ELECTRICAL STATE OF CALIFORNIA

THE STATE OF CALIFORNIA OR ITS OFFICERS OR AGENTS SHALL NOT BE RESPONSIBLE FOR THE ACCURACY OR COMPLETENESS OF ELECTRONIC COPIES OF THIS PLAN SHEET.

PB AMERICAS, Inc.
A Parsons Brinckerhoff Company
303 Second St., Suite 700N
San Francisco, CA 94107-1317

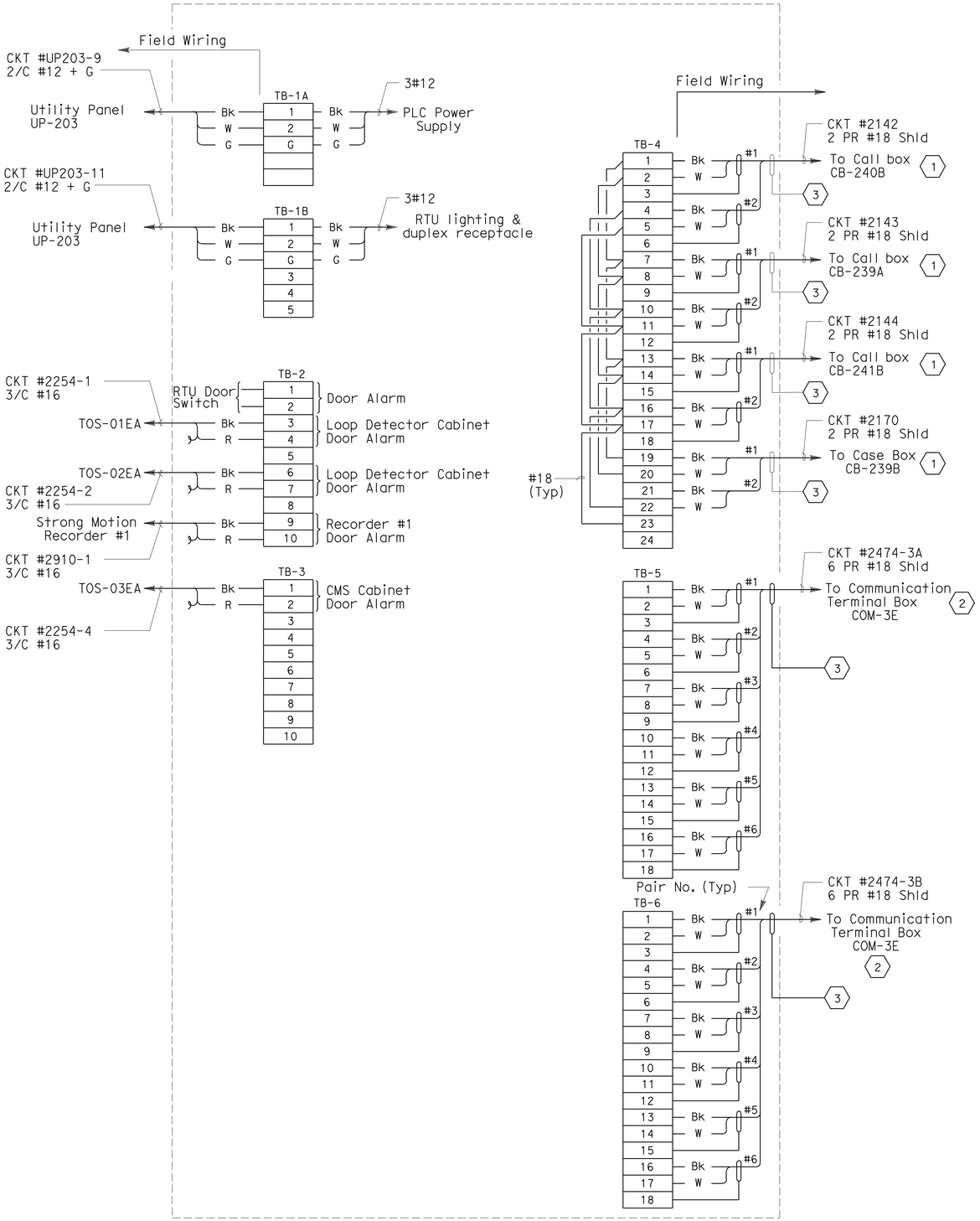

CONNECTION DIAGRAM - RTU-9E

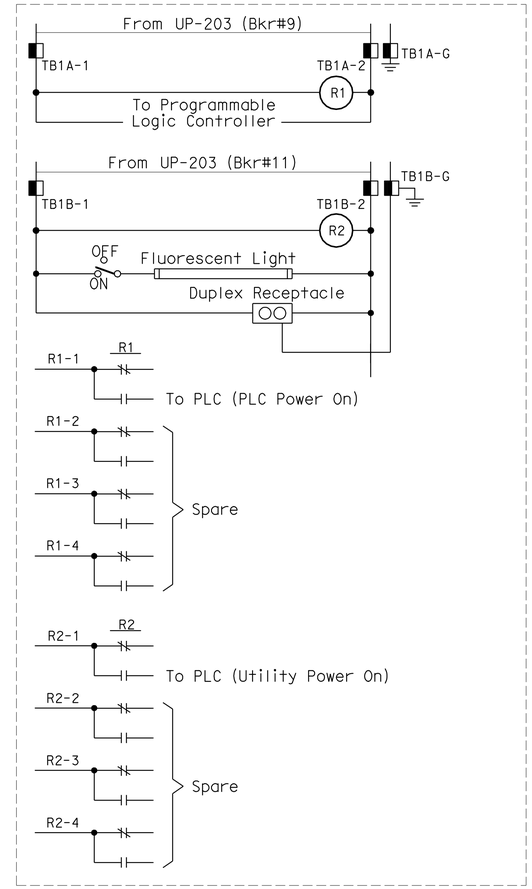

ELEMENTARY DIAGRAM - RTU-9E

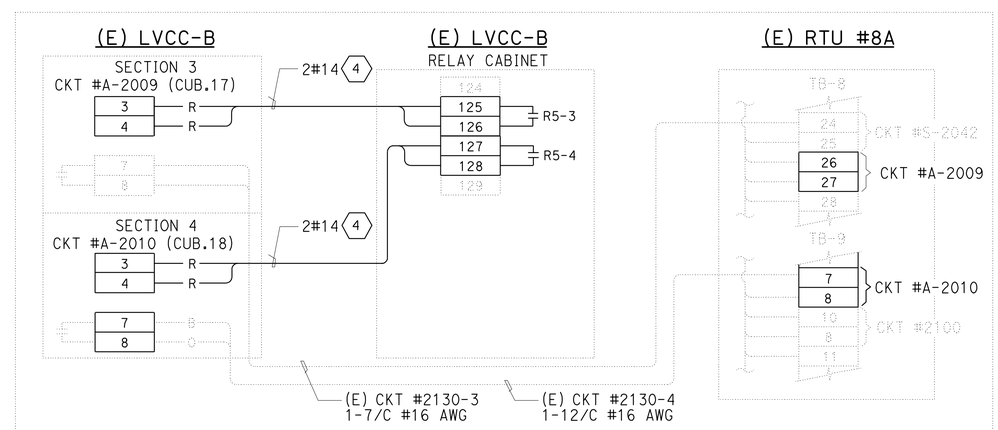

CONNECTION DIAGRAM

INSIDE EXISTING YBI SUBSTATION

SHEET NOTES:

1. For connection diagram to call boxes, see sheet E-171.
2. For connection to scada communication terminal box, see sheet E-143.
3. Field to tape cable overall shield wire.
4. Add wiring inside LVCC-B line up.

NOTES:

1. All spare conductors shall be coiled and taped at conductor ends unless terminated.
2. Terminate cable shields to low level ground bus.
3. References:
   - For UP-203 panel schedule, see sheet E-112.
   - For RTU #9E panel layout, see sheet E-139.

DETAILS

SCADA REMOTE TERMINAL UNIT SYSTEM (RTU-9E ELEMENTARY AND CONNECTION DIAGRAM)

NO SCALE

5 REVISED PER ADDENDUM No. 5 DATED JULY 30, 2009

THIS PLAN ACCURATE FOR ELECTRICAL WORK ONLY.

E-142

STATE OF CALIFORNIA - DEPARTMENT OF TRANSPORTATION
Caltrans

CONSULTANT FUNCTIONAL SUPERVISOR: BEHZAD GOLEMOHAMMADI
CALCULATED-DESIGNED BY: EDC
CHECKED BY: CYF
REVISED BY
DATE REVISED

LAST REVISION 00-00-00
DATE PLOTTED => 28-JUL-2009
TIME PLOTTED => 06:27

Dist	COUNTY	ROUTE	KILOMETER POST TOTAL PROJECT	SHEET No.	TOTAL SHEETS
04	SF	80	12.7/13.2	262	806

REGISTERED ELECTRICAL ENGINEER — 2/14/08 DATE

6-23-08
PLANS APPROVAL DATE

REGISTERED PROFESSIONAL ENGINEER — FADI WALIEDDINE No. 11465 Exp. 12/31/09 ELECTRICAL — STATE OF CALIFORNIA

THE STATE OF CALIFORNIA OR ITS OFFICERS OR AGENTS SHALL NOT BE RESPONSIBLE FOR THE ACCURACY OR COMPLETENESS OF ELECTRONIC COPIES OF THIS PLAN SHEET.

PB AMERICAS, Inc.
A Parsons Brinckerhoff Company
303 Second St., Suite 700N
San Francisco, CA 94107-1317

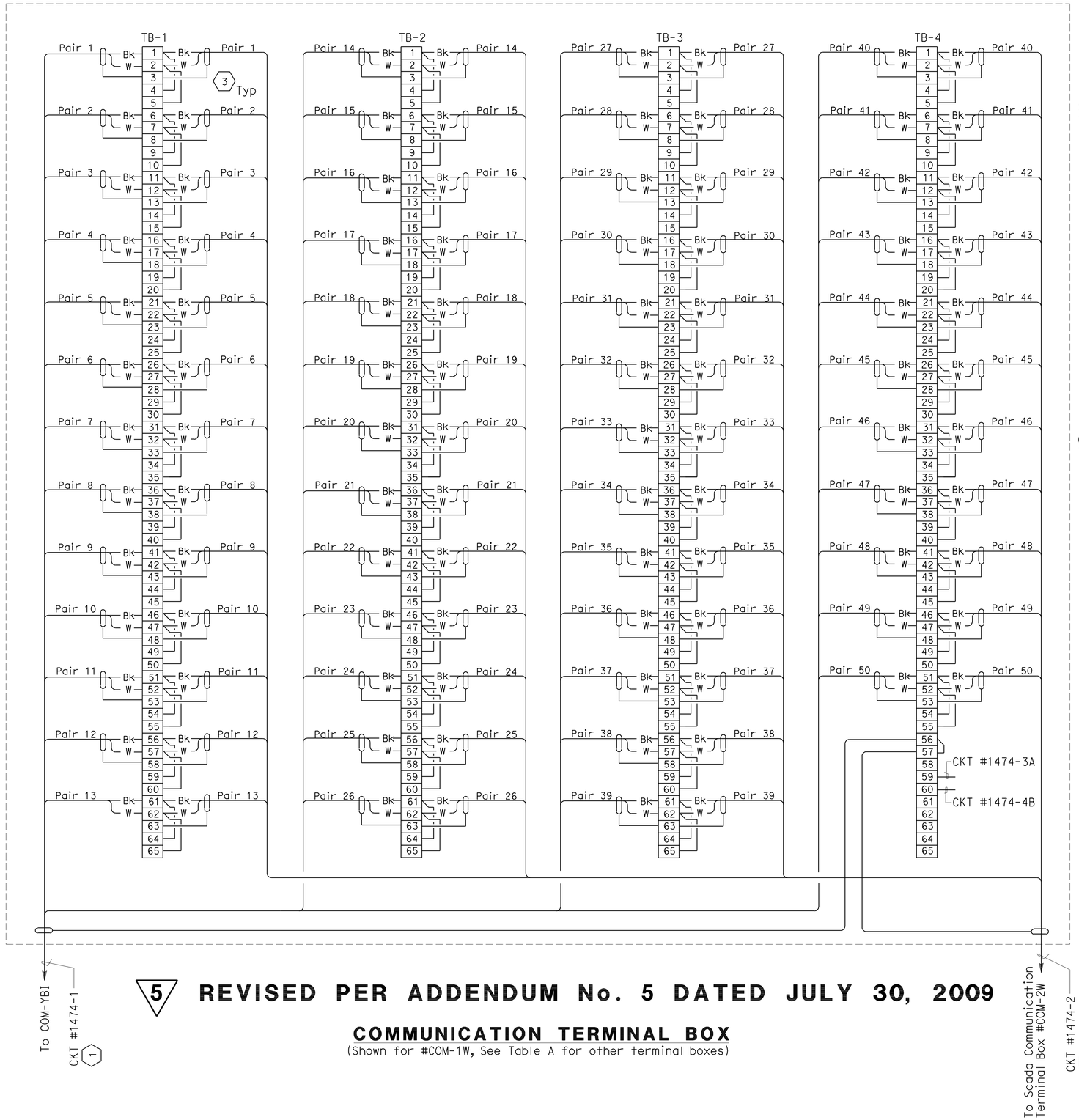

5 **REVISED PER ADDENDUM No. 5 DATED JULY 30, 2009**

COMMUNICATION TERMINAL BOX

(Shown for #COM-1W, See Table A for other terminal boxes)

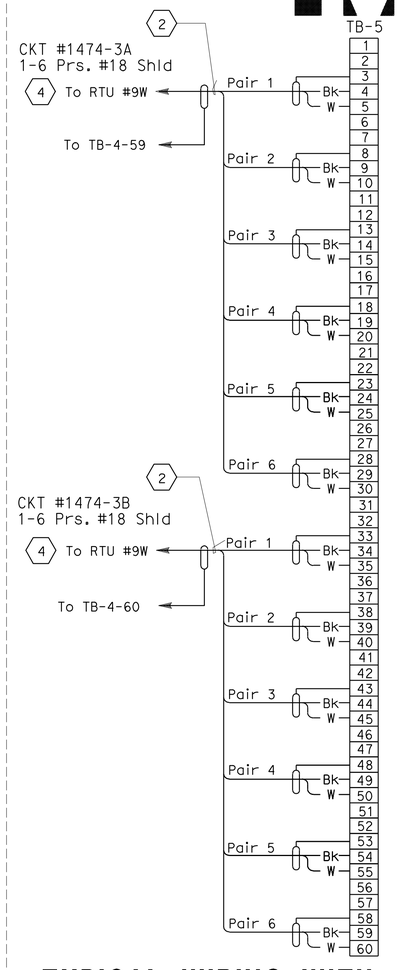

TYPICAL WIRING WITH CONNECTION TO SCADA RTU CABINET

SHOWN FOR RTU #9W

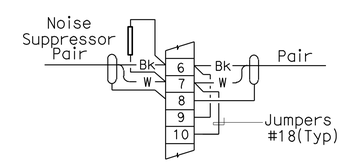

TYPICAL WIRING - EACH PAIR

SHEET NOTES:

1. Scada communication cable 50 pairs #18, shielded pairs and overall shield.
2. RTU communication cable 1-6 pairs shielded and overall shield.
3. Individual and overall shields shall be grounded at the interface cabinet only.
4. For RTU #9W connection diagram, see sheet E-141.

NOTES:

1. References:
   - For SCADA and telephone cable block diagram, see sheet E-138.
   - For RTU #9W and 9E panel layout, see sheet E-139.
   - For SCADA communication terminal box layout, see sheet E-140.

TABLE A

Terminal Box No.	Circuit No.	Termination To
Westbound		
COM-1W	1474-1	COM-YBI
	1474-2	COM-3W
~~COM-2W~~	~~1474-2~~	~~COM-1W~~
	~~1474-3~~	~~COM-3W~~
COM-3W (5)	1474-2	COM-1W
	1474-3A	RTU #9W
	1474-3B	RTU #9W
Eastbound		
Terminal Box No.	Circuit No.	Termination To
COM-1E	2474-1	COM-YBI
	2474-2	COM-2E
COM-2E	2474-2	COM-1E
	2474-3	COM-3E
COM-3E	2474-3	COM-2E
	2474-3A	RTU #9E
	2474-3B	RTU #9E

DETAILS
SCADA REMOTE TERMINAL UNIT SYSTEM (COM-1W TERMINAL BOX WIRING DIAGRAM)

NO SCALE

E-143

STATE OF CALIFORNIA - DEPARTMENT OF TRANSPORTATION
Caltrans

CONSULTANT FUNCTIONAL SUPERVISOR: BEHZAD GOLEMOHAMMADI
CALCULATED-DESIGNED BY
CHECKED BY
REVISED BY
DATE REVISED

THIS PLAN ACCURATE FOR ELECTRICAL WORK ONLY.

LAST REVISION 00-00-00 DATE PLOTTED => 28-JUL-2009 TIME PLOTTED => 06:27

Dist	COUNTY	ROUTE	KILOMETER POST TOTAL PROJECT	SHEET No.	TOTAL SHEETS
04	SF	80	12.7/13.2	265	806

Sean Coughlin 3-26-08
REGISTERED ELECTRICAL ENGINEER DATE

6-23-08
PLANS APPROVAL DATE

REGISTERED PROFESSIONAL ENGINEER S.F. Coughlin No. 12227 Exp. 9-30-10 ELECTRICAL STATE OF CALIFORNIA

THE STATE OF CALIFORNIA OR ITS OFFICERS OR AGENTS SHALL NOT BE RESPONSIBLE FOR THE ACCURACY OR COMPLETENESS OF ELECTRONIC COPIES OF THIS PLAN SHEET.

Caltrans Metric

NOTES:

1. Except for the ramp meter system TOS installation shall include all elements shown in Schedule A on this sheet. Installation details for each element are referenced in Schedule A.
2. TOS installation includes cable installation from each TOS element to corresponding controller cabinet and all communications cable terminations inside controller cabinets, as detailed on sheets E-149 to E-156. For controller cabinet locations for corresponding TOS elements, refer to detail sheets listed in Schedule A.
3. TOS installation also includes all communication cables and equipment as shown on Sheets E-147 thru E-157.
4. Element locations are identified with stationing. MVDS locations also note the light pole identification number. For light pole schedule information, refer to E-68.

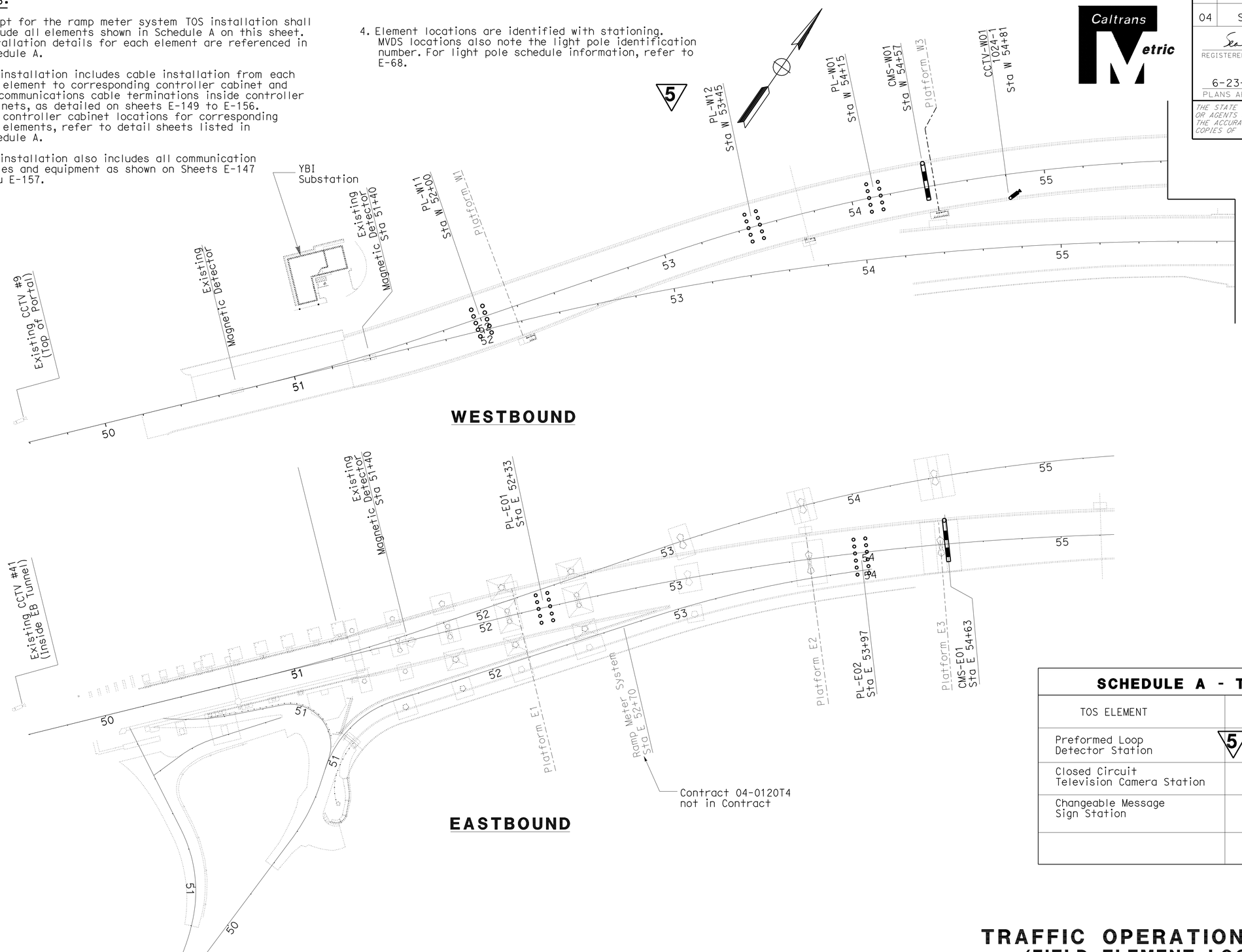

SCHEDULE A - TOS ELEMENTS

TOS ELEMENT	NO. OF ELEMENTS	DETAILS SHEET
Preformed Loop Detector Station	5	E-147
Closed Circuit Television Camera Station	1	E-148 thru E-150
Changeable Message Sign Station	2	E-151 S-17 thru S-18

5 REVISED PER ADDENDUM No. 5 DATED JULY 30, 2009

TRAFFIC OPERATIONS SYSTEM
(FIELD ELEMENT LOCATIONS)

SCALE: 1:1000

THIS PLAN IS ACCURATE FOR ELECTRICAL WORK ONLY

ALL DIMENSIONS IN METERS UNLESS OTHERWISE SHOWN

E-146

STATE OF CALIFORNIA - DEPARTMENT OF TRANSPORTATION
Caltrans ELECTRICAL

FUNCTIONAL SUPERVISOR: SEAN COUGHLIN
CALCULATED-DESIGNED BY: SEAN COUGHLIN
CHECKED BY: PARVIS BOOZARPOUR
REVISED BY: SC
DATE REVISED: 10/07

LAST REVISION 03-26-08
DATE PLOTTED => 28-JUL-2009
TIME PLOTTED => 06:28

Dist	COUNTY	ROUTE	KILOMETER POST TOTAL PROJECT	SHEET No.	TOTAL SHEETS
04	SF	80	12.7/13.2	266	806

Caltrans Metric

REGISTERED ELECTRICAL ENGINEER — DATE: 3-26-08

PLANS APPROVAL DATE: 6-23-08

REGISTERED PROFESSIONAL ENGINEER — S.F. Coughlin No. 12227 Exp. 9-30-10 ELECTRICAL — STATE OF CALIFORNIA

THE STATE OF CALIFORNIA OR ITS OFFICERS OR AGENTS SHALL NOT BE RESPONSIBLE FOR THE ACCURACY OR COMPLETENESS OF ELECTRONIC COPIES OF THIS PLAN SHEET.

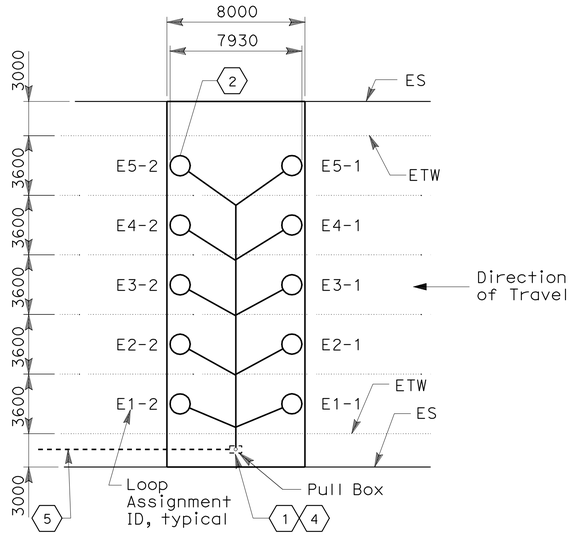

TYPICAL PREFORMED LOOP DETECTOR STATION CONFIGURATION

NO SCALE

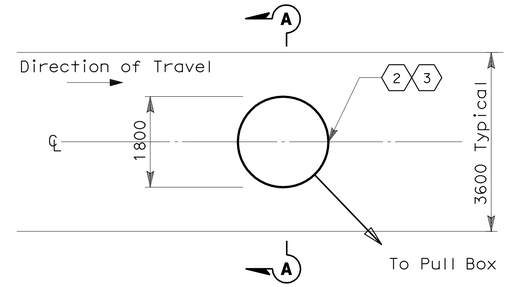

TYPICAL TYPE E LOOP DETECTOR PER LANE DETAIL

SEE SHEET ES-5B FOR ADDITIONAL DETAILS

NO SCALE

SHEET NOTES:

1. Use splice Type "S", RSP ES-13A. Splicing allowed only in the pull box between DLC and home run DLC using approved splicing kit.
2. Type E Preformed Loops.
3. Loops shall be centered in each lane.
4. DLC will be labeled with loop assignment ID in the pull box.
5. For conduit routing to service platform refer to Service Platform Reference Sheet listed in the Preformed Loop Schedule. Home run DLC cable shall be routed through this conduit to the appropriate cabinet identified in the Preformed Loop Schedule.
6. Six Lanes.
7. DLC cable for this station shall be installed by others. Control cabinet TOS-RM01 and conduit run from PB-RM01 shall be by others.

LOOP ASSIGNMENT ID

E 4-1

- First row of loops
- Lane number
- Direction
  - E-Eastbound
  - W- Westbound

1 - Leading Detector

2 - Trailing Detector

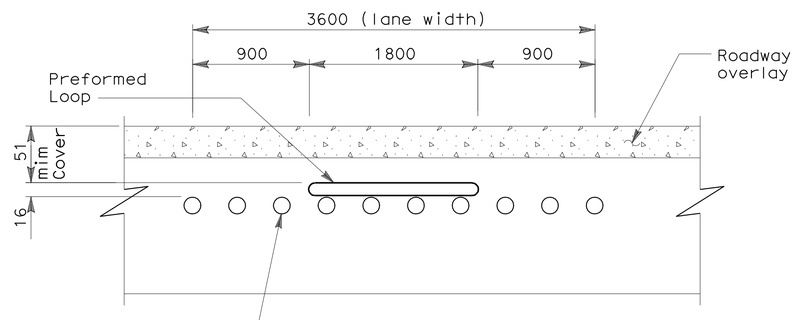

SECTION A-A

NO SCALE

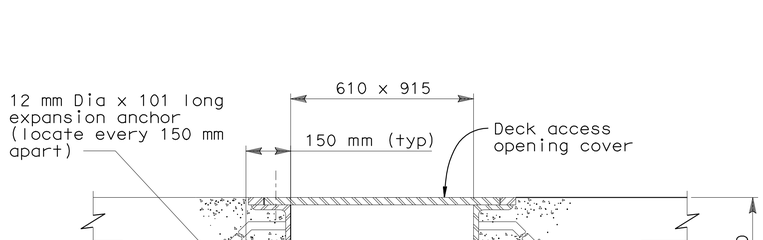

PULL BOX FOR PREFORMED LOOP 5

NO SCALE

PREFORMED LOOP SCHEDULE

ID #	STATION	CABINET ID #	SERVICE PLATFORM REFERENCE SHEET
PL-E01	E 52+33	TOS-RM01	E-105
PL-E02	E 53+97	TOS-02EA	E-106
PL-W01	W 54+15	TOS-03WB	E-66
PL-W11	W 52+00	TOS-01WA	E-64
PL-W12	W 53+45	-	-

7 → PL-E01

6 → PL-W11

5

DETAILS

TRAFFIC OPERATIONS SYSTEM (PREFORMED LOOP DETECTOR STATION INSTALLATION)

SCALE AS NOTED

5 REVISED PER ADDENDUM No. 5 DATED JULY 30, 2009

THIS PLAN IS ACCURATE FOR ELECTRICAL WORK ONLY

ALL DIMENSIONS IN MILLIMETERS UNLESS OTHERWISE SHOWN

E-147

STATE OF CALIFORNIA - DEPARTMENT OF TRANSPORTATION — Caltrans — ELECTRICAL

FUNCTIONAL SUPERVISOR: SEAN COUGHLIN

CALCULATED-DESIGNED BY: SEAN COUGHLIN — CHECKED BY: PARVIS BOOZARPOUR

REVISED BY: SC — DATE REVISED: 10/07

LAST REVISION 03-26-08 — DATE PLOTTED => 28-JUL-2009 — TIME PLOTTED => 06:28

Dist	COUNTY	ROUTE	KILOMETER POST TOTAL PROJECT	SHEET No.	TOTAL SHEETS
04	SF	80	12.7/13.2	289	806

REGISTERED ELECTRICAL ENGINEER — 2/14/08 DATE

6-23-08
PLANS APPROVAL DATE

REGISTERED PROFESSIONAL ENGINEER — FADI WALIEDDINE No. 11465 Exp. 12/31/09 ELECTRICAL — STATE OF CALIFORNIA

THE STATE OF CALIFORNIA OR ITS OFFICERS OR AGENTS SHALL NOT BE RESPONSIBLE FOR THE ACCURACY OR COMPLETENESS OF ELECTRONIC COPIES OF THIS PLAN SHEET.

PB AMERICAS, Inc.
A Parsons Brinckerhoff Company
303 Second St., Suite 700N
San Francisco, CA 94107-1317

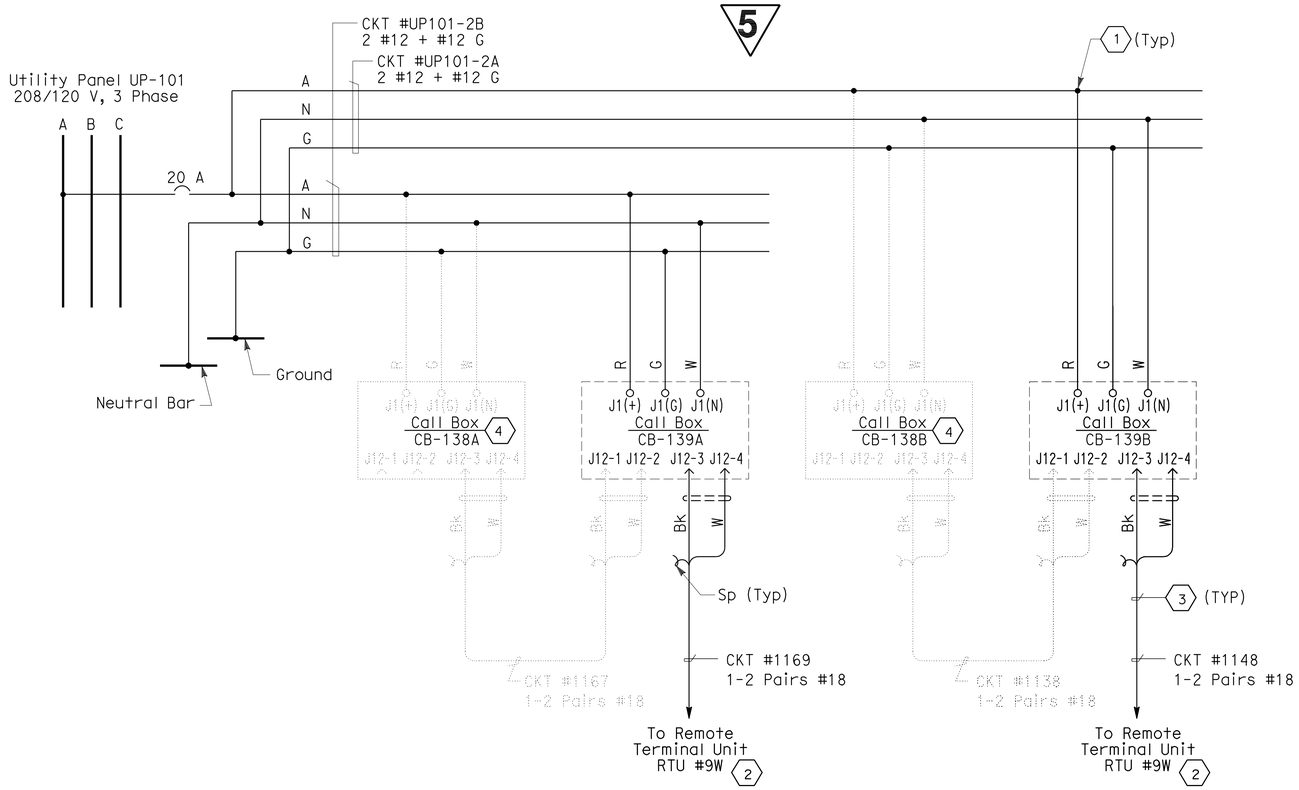

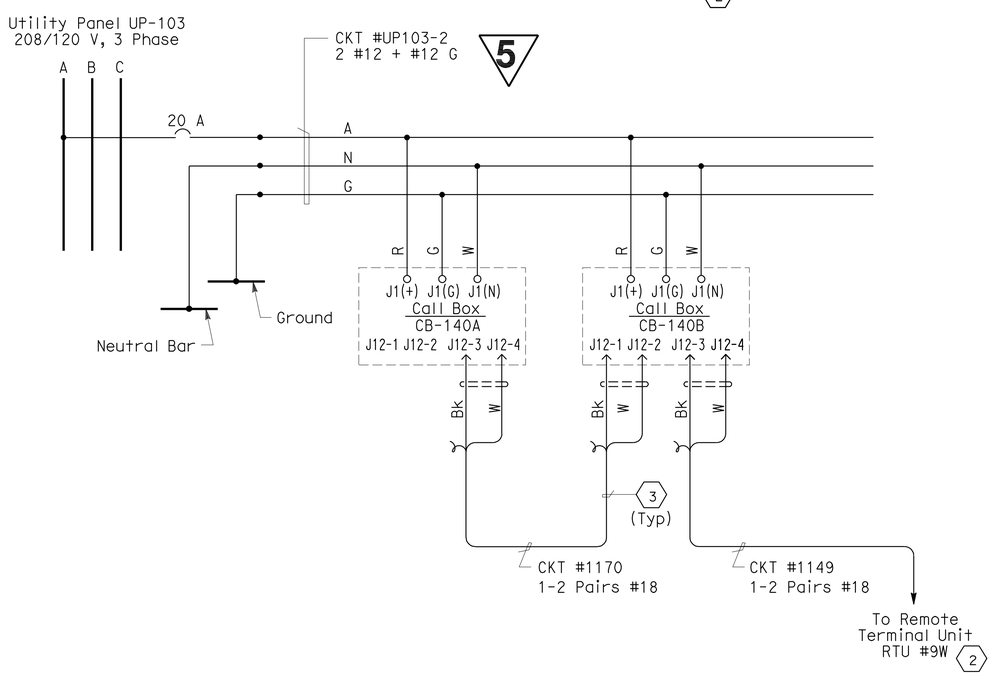

WESTBOUND YBI TRANSITION STRUCTURES

SHEET NOTES:

1. Conductors spliced inside PB-Ltg.
2. For continuation, see RTU #9W connection diagram sheet E-141.
3. Data cable 1-2 pairs #18 shielded with overall shield. Coil and tape end of pair #2.
4. Call Box (NIC).

NOTE:

1. References:
   - For panel UP-101, UP-103 schedules, see sheets E-70 and E-71.
   - For call box westbound schedule, see sheet E-172.

5 **REVISED PER ADDENDUM No. 5 DATED JULY 30, 2009**

CALL BOX SYSTEM
(CALL BOX WIRING DIAGRAM)
NO SCALE

E-170

THIS PLAN ACCURATE FOR ELECTRICAL WORK ONLY.

REVISED BY | DATE REVISED
EDC | CYF
CALCULATED-DESIGNED BY | CHECKED BY
CONSULTANT FUNCTIONAL SUPERVISOR: BEHZAD GOLEMOHAMMADI
STATE OF CALIFORNIA - DEPARTMENT OF TRANSPORTATION

LAST REVISION 00-00-00 | DATE PLOTTED => 28-JUL-2009 | TIME PLOTTED => 06:28

DIST	COUNTY	ROUTE	KILOMETER POST TOTAL PROJECT	SHEET NO.	TOTAL SHEETS
04	SF	80	12.7/13.2	291A	806

REGISTERED ENGINEER-CIVIL

PLANS APPROVAL DATE

REGISTERED PROFESSIONAL ENGINEER A. L. ELY No. 18880 Exp. 9-30-09 CIVIL STATE OF CALIFORNIA

The State of California or its officers or agents shall not be responsible for the accuracy or completeness of electronic copies of this plan sheet.

T.Y. LIN / MOFFATT & NICHOL
825 BATTERY STREET
SAN FRANCISCO, CA 94111

Caltrans Metric

5

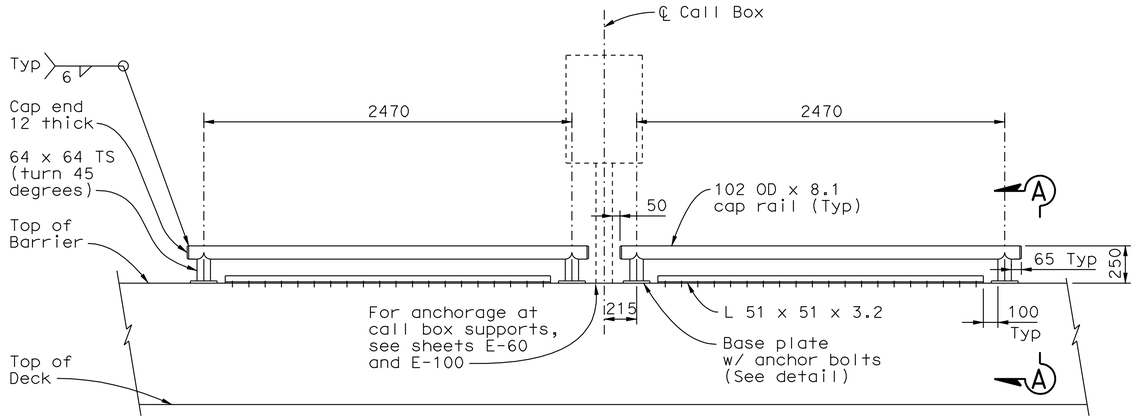

ELEVATION
1:20

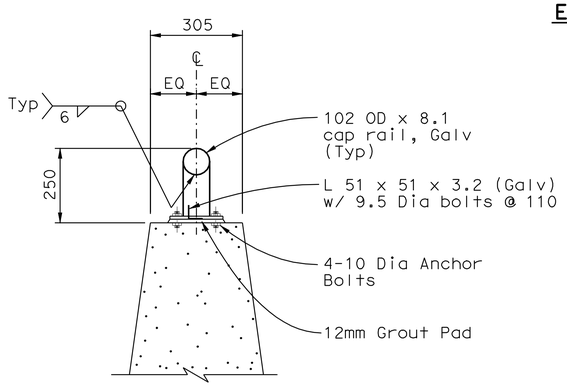

SECTION A-A
1:10

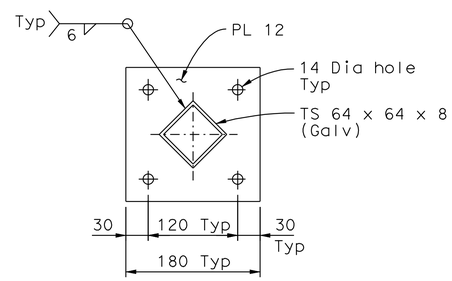

BASE PLATE DETAIL
1:4

RAILING AT CALL BOX LOCATIONS
(Required at all barrier mounted call boxes located on bridge structures, for locations see sheets E-168 and E-172)

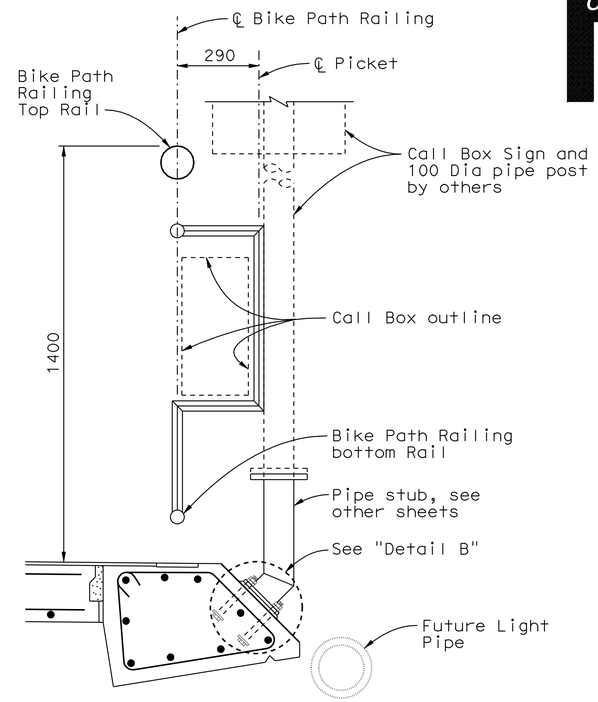

ELEVATION
1:10

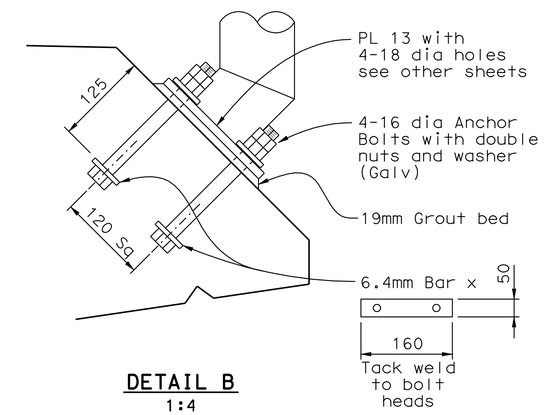

DETAIL B
1:4

CALL BOX SIGN MOUNTING AT BIKE PATH

5 ADDED PER ADDENDUM No. 5 DATED JULY 30, 2009

ALL DIMENSIONS ARE IN MILLIMETERS UNLESS OTHERWISE SHOWN.

MISCELLANEOUS DETAILS AT CALL BOX LOCATIONS

SCALE AS NOTED

E-172A

DATE	REVISED BY	DATE REVISED

CALCULATED/DESIGNED BY: JNB — CHECKED BY: FS

DESIGN OVERSIGHT: BOB ZANDIPOUR

STATE OF CALIFORNIA - DEPARTMENT OF TRANSPORTATION

Caltrans

LAST REVISION 04-19-00 — DATE PLOTTED => 28-JUL-2009 TIME PLOTTED => 06:29

FOR REDUCED PLANS ORIGINAL SCALE IN MILLIMETERS 0 20 40 60 80

FILE => 40120sua172A.add
USERNAME => trmikesl

CU 04251 | EA 0120S1

Dist	COUNTY	ROUTE	KILOMETER POST TOTAL PROJECT	SHEET No.	TOTAL SHEETS
04	SF	80	12.7/13.2	294	806

REGISTERED ELECTRICAL ENGINEER 5/19/08 DATE

6-23-08
PLANS APPROVAL DATE

REGISTERED PROFESSIONAL ENGINEER T. W. SPARKS No. E16039 Exp. 9-30-09 ELECTRICAL STATE OF CALIFORNIA

THE STATE OF CALIFORNIA OR ITS OFFICERS OR AGENTS SHALL NOT BE RESPONSIBLE FOR THE ACCURACY OR COMPLETENESS OF ELECTRONIC COPIES OF THIS PLAN SHEET.

T.Y. LIN / MOFFATT & NICHOL
TWO HARRISON STREET, SUITE 500
SAN FRANCISCO, CA 94105

5 Caltrans Metric

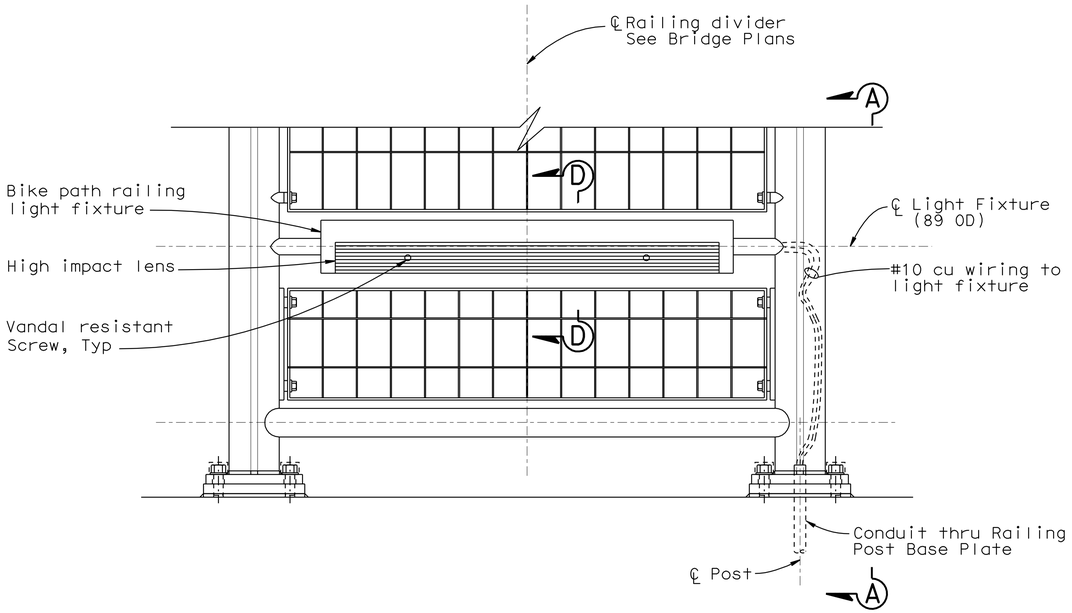

ELEVATION
1:5

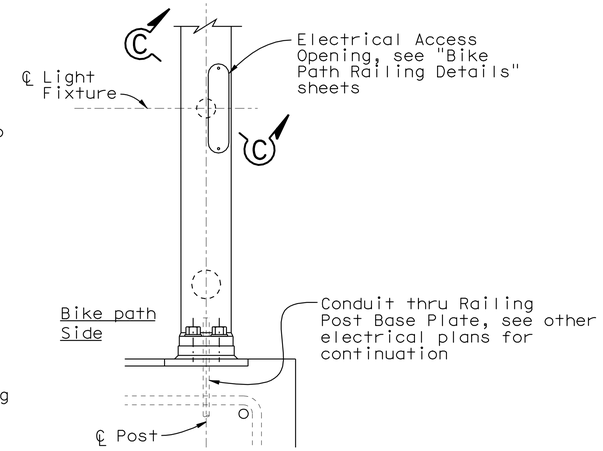

SECTION A-A
1:5

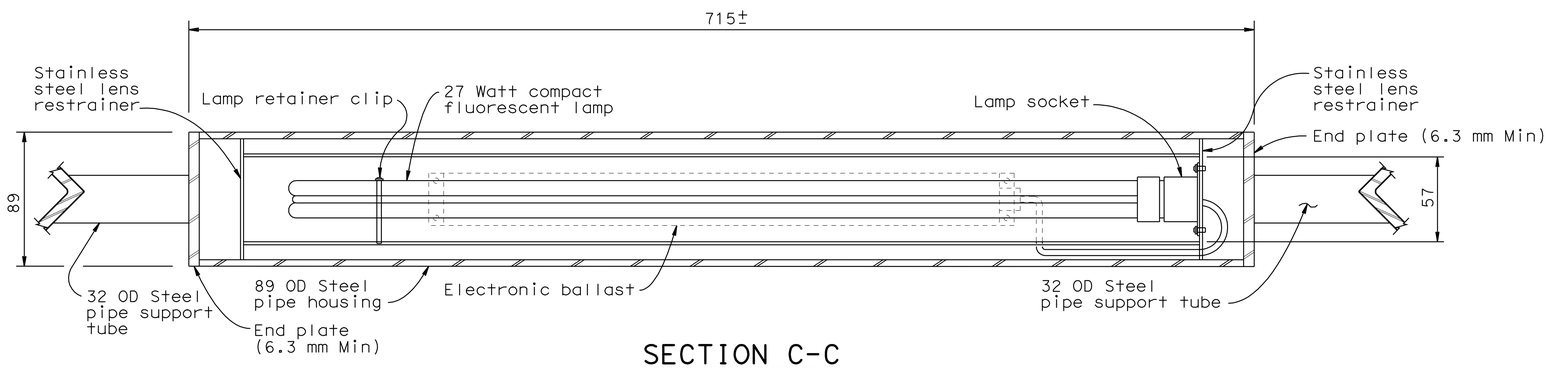

SECTION C-C
1:2

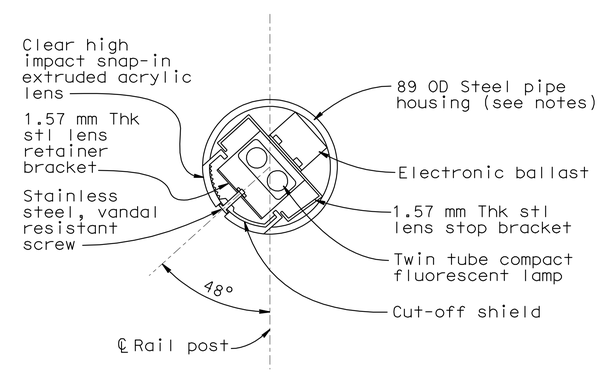

SECTION D-D
1:2

NOTES:

1. All metal (except stainless steel) parts of railing light assembly shall be coated.
2. Refer to structural plans for railing details.
3. Light fixtures shall be parallel to top of bike path.
4. Light fixture support tube shall be welded to vertical posts.
5. All exposed welds shall be ground smooth.

5 **REVISED PER ADDENDUM No. 5 DATED JULY 30, 2009**

ALL DIMENSIONS ARE IN MILLIMETERS UNLESS OTHERWISE SHOWN.

DETAILS
TRANSITION STRUCTURE ROADWAY EASTBOUND
(TYPICAL BIKE PATH LIGHTING)

SCALE AS NOTED

E-175

REVISED BY	DATE REVISED
JNB	5/16/08
JNB	1/31/08

GAM TYL

CALCULATED-DESIGNED BY / CHECKED BY

CONSULTANT FUNCTIONAL SUPERVISOR BOB ZANDIPOUR

STATE OF CALIFORNIA - DEPARTMENT OF TRANSPORTATION Caltrans

YBI STRUCTURES April 29, 2009

LAST REVISION 05-19-08 DATE PLOTTED => 28-JUL-2009 TIME PLOTTED => 06:29

Dist	COUNTY	ROUTE	KILOMETER POST TOTAL PROJECT	SHEET No.	TOTAL SHEETS
04	SF	80	12.7/13.2	302	806

Caltrans Metric

2/14/08
REGISTERED ELECTRICAL ENGINEER

6-23-08
PLANS APPROVAL DATE

REGISTERED PROFESSIONAL ENGINEER
FADI WALIEDDINE
No. 11465
Exp. 12/31/09
ELECTRICAL
STATE OF CALIFORNIA

THE STATE OF CALIFORNIA OR ITS OFFICERS OR AGENTS SHALL NOT BE RESPONSIBLE FOR THE ACCURACY OR COMPLETENESS OF ELECTRONIC COPIES OF THIS PLAN SHEET.

PB AMERICAS, Inc.
A Parsons Brinckerhoff Company
303 Second St., Suite 700N
San Francisco, CA 94107-1317

Conduit/Tray No: *0078 | Reference: E-30, E-32, E-16
Size: 103 | Type: RGS conduit
From: (E) 600 V Pull Box | To: 0078
Total Fill (mm2): 2518.76 | Remarks: Existing conduit, add new cable (s) and pull rope thru the entire length of the connected conduits as listed below.
Allowable Fill (mm2): 3324.51
Description of Changes:

Included Cable No.	Conductor Type	Area (mm2)
A-3031-1	1-3/C + Gnd, #4, 600 V, EPR insulation	366.10
A-3032-1	1-3/C + Gnd, #4, 600 V, EPR insulation	366.10
A-3033-1	1-3/C + Gnd, #2, 600 V, EPR insulation	527.18
A-3034-1	1-3/C + Gnd, #2, 600 V, EPR insulation	527.18
A-3035-1	1-3/C + Gnd, #4, 600 V, EPR insulation	366.10
A-3036-1	1-3/C + Gnd, #4, 600 V, EPR insulation	366.10
Pull Rope	Soft-Fiber Polyester	0.00

Conduit/Tray No: *0079 | Reference: E-30, E-32, E-16
Size: 103 | Type: RGS conduit
From: (E) 600 V Pull Box | To: 0079
Total Fill (mm2): 3163.08 | Remarks: Existing conduit, add new cable (s) and pull rope thru the entire length of the connected conduits as listed below.
Allowable Fill (mm2): 3324.51
Description of Changes:

Included Cable No.	Conductor Type	Area (mm2)
A-3039-1	1-3/C + Gnd, #2, 600 V, EPR insulation	527.18
A-3040-1	1-3/C + Gnd, #2, 600 V, EPR insulation	527.18
A-3041-1	1-3/C + Gnd, #2, 600 V, EPR insulation	527.18
A-3042-1	1-3/C + Gnd, #2, 600 V, EPR insulation	527.18
A-3043-1	1-3/C + Gnd, #2, 600 V, EPR insulation	527.18
A-3057-1	1-3/C + Gnd, #2, 600 V, EPR insulation	527.18
Pull Rope	Soft-Fiber Polyester	0.00

~~Conduit/Tray No: *0080 | Reference: E-30, E-32, E-16~~
~~Size: 103 | Type: RGS conduit~~
~~From: (E) 600 V Pull Box | To: 0080~~
~~Total Fill (mm2): 2152.66 | Remarks: Existing conduit, add new cable (s) and pull rope thru the entire length of the connected conduits as listed below.~~
~~Allowable Fill (mm2): 3324.51~~
~~Description of Changes:~~

Included Cable No.	Conductor Type	Area (mm2)
Pull Rope	Soft-Fiber Polyester	0.00
S-2031-1	1-3/C + Gnd, #2, 600 V, EPR insulation	527.18
S-2032-1	1-3/C + Gnd, #4, 600 V, EPR insulation	366.10
S-3051-1	1-3/C + Gnd, #4, 600 V, EPR insulation	366.10
S-3052-1	1-3/C + Gnd, #2, 600 V, EPR insulation	527.18
S-3053-1	1-3/C + Gnd, #4, 600 V, EPR insulation	366.10

5

Conduit/Tray No: *0081 | Reference: E-30, E-32, E-16
Size: 103 | Type: RGS conduit
From: (E) 600 V Pull Box | To: 0081
Total Fill (mm2): 2433.01 | Remarks: Existing conduit, add new cable (s) and pull rope thru the entire length of the connected conduits as listed below.
Allowable Fill (mm2): 3324.51
Description of Changes:

Included Cable No.	Conductor Type	Area (mm2)
A-2011-1	1-3/C + Gnd, #2, 600 V, EPR insulation	527.18
A-2012-1	1-3/C + Gnd, #2, 600 V, EPR insulation	527.18
A-2013-1	1-3/C + Gnd, #2, 600 V, EPR insulation	527.18
A-2014-1	1-3/C + Gnd, #2, 600 V, EPR insulation	527.18
A-2035-1	1-3/C + Gnd, #6, 600 V, EPR insulation	324.29
Pull Rope	Soft-Fiber Polyester	0.00

Conduit/Tray No: *0082 | Reference: E-30, E-32, E-16
Size: 103 | Type: RGS conduit
From: (E) 600 V Pull Box | To: 0082
Total Fill (mm2): 2635.90 | Remarks: Existing conduit, add new cable (s) and pull rope thru the entire length of the connected conduits as listed below.
Allowable Fill (mm2): 3324.51
Description of Changes:

Included Cable No.	Conductor Type	Area (mm2)
2095	1-3/C + Gnd, #2, 600 V, EPR insulation	527.18
2096	1-3/C + Gnd, #2, 600 V, EPR insulation	527.18
2097	1-3/C + Gnd, #2, 600 V, EPR insulation	527.18
2098	1-3/C + Gnd, #2, 600 V, EPR insulation	527.18
2099	1-3/C + Gnd, #2, 600 V, EPR insulation	527.18
Pull Rope	Soft-Fiber Polyester	0.00

5 **REVISED PER ADDENDUM No. 5 DATED JULY 30, 2009**

CONDUIT AND TRAY SCHEDULE
UNDERGROUND

E-183

STATE OF CALIFORNIA - DEPARTMENT OF TRANSPORTATION
Caltrans

CONSULTANT FUNCTIONAL SUPERVISOR: BEHZAD GOLEMOHAMMADI
CALCULATED-DESIGNED BY: CARMELO RIVERA
CHECKED BY: ELLERY LUCAS
REVISED BY | DATE REVISED

LAST REVISION | DATE PLOTTED => 28-JUL-2009 | TIME PLOTTED => 06:29
00-00-00

Dist	COUNTY	ROUTE	KILOMETER POST TOTAL PROJECT	SHEET No.	TOTAL SHEETS
04	SF	80	12.7/13.2	303	806

Caltrans Metric

2/14/08
REGISTERED ELECTRICAL ENGINEER

6-23-08
PLANS APPROVAL DATE

REGISTERED PROFESSIONAL ENGINEER
FADI WALIEDDINE
No. 11465
Exp. 12/31/09
ELECTRICAL
STATE OF CALIFORNIA

THE STATE OF CALIFORNIA OR ITS OFFICERS OR AGENTS SHALL NOT BE RESPONSIBLE FOR THE ACCURACY OR COMPLETENESS OF ELECTRONIC COPIES OF THIS PLAN SHEET.

PB AMERICAS, Inc.
A Parsons Brinckerhoff Company
303 Second St., Suite 700N
San Francisco, CA 94107-1317

Conduit/Tray No:	*0350
Reference:	E-20, E-33
Size:	103
Type:	RGS conduit
From:	Sta 1 + 63
To:	(E) Manhole-16
Total Fill (mm2):	1277.47
Remarks:	Existing conduit, add new cable (s) and pull rope thru the entire length of the connected conduits as listed below.
Allowable Fill (mm2):	3324.51
Description of Changes:	

Included Cable No.	Conductor Type	Area (mm2)
2119-A	3 + 1 Gnd, 250 kcmil, #1/0, 600 V, RHH/RHW insulation	1277.47
Pull Rope	Soft-Fiber Polyester	0.00

Conduit/Tray No:	*0351
Reference:	E-20, E-33
Size:	103
Type:	RGS conduit
From:	Sta 1 + 63
To:	(E) Manhole-16
Total Fill (mm2):	2518.76
Remarks:	Existing conduit, add new cable (s) and pull rope thru the entire length of the connected conduits as listed below.
Allowable Fill (mm2):	3324.51
Description of Changes:	

Included Cable No.	Conductor Type	Area (mm2)
A-3001-1	1-3/C + Gnd, #4, 600 V, EPR insulation	366.10
A-3002-1	1-3/C + Gnd, #4, 600 V, EPR insulation	366.10
A-3003-1	1-3/C + Gnd, #4, 600 V, EPR insulation	366.10
A-3004-1	1-3/C + Gnd, #2, 600 V, EPR insulation	527.18
A-3005-1	1-3/C + Gnd, #2, 600 V, EPR insulation	527.18
A-3006-1	1-3/C + Gnd, #4, 600 V, EPR insulation	366.10
Pull Rope	Soft-Fiber Polyester	0.00

Conduit/Tray No:	*0352
Reference:	E-20, E-33
Size:	103
Type:	RGS conduit
From:	Sta 1 + 63
To:	(E) Manhole-16
Total Fill (mm2):	2635.90
Remarks:	Existing conduit, add new cable (s) and pull rope thru the entire length of the connected conduits as listed below.
Allowable Fill (mm2):	3324.51
Description of Changes:	

Included Cable No.	Conductor Type	Area (mm2)
1095	1-3/C + Gnd, #2, 600 V, EPR insulation	527.18
1096	1-3/C + Gnd, #2, 600 V, EPR insulation	527.18
1097	1-3/C + Gnd, #2, 600 V, EPR insulation	527.18
1098	1-3/C + Gnd, #2, 600 V, EPR insulation	527.18
1099	1-3/C + Gnd, #2, 600 V, EPR insulation	527.18
Pull Rope	Soft-Fiber Polyester	0.00

Conduit/Tray No:	*0353
Reference:	E-20, E-33
Size:	103
Type:	RGS conduit
From:	Sta 1 + 63
To:	(E) Manhole-16
Total Fill (mm2):	2519.96
Remarks:	Existing conduit, add new cable (s) and pull rope thru the entire length of the connected conduits as listed below.
Allowable Fill (mm2):	3324.51
Description of Changes:	

Included Cable No.	Conductor Type	Area (mm2)
1115	1-3/C + Gnd, #1/0, 600 V, EPR insulation	754.18
1117	1-3/C + Gnd, #2/0, 600 V, EPR insulation	882.89
1118	1-3/C + Gnd, #2/0, 600 V, EPR insulation	882.89
Pull Rope	Soft-Fiber Polyester	0.00

Conduit/Tray No:	*0354
Reference:	E-20, E-33
Size:	103
Type:	RGS conduit
From:	Sta 1 + 63
To:	(E) Manhole-16
Total Fill (mm2):	2380.12
Remarks:	Existing conduit, add new cable (s) and pull rope thru the entire length of the connected conduits as listed below.
Allowable Fill (mm2):	3324.51
Description of Changes:	

Included Cable No.	Conductor Type	Area (mm2)
A-3008-1	1-2/C + Gnd, #8, 600 V, EPR insulation	227.46
A-3009-1	1-3/C + Gnd, #2, 600 V, EPR insulation	527.18
A-3010-1	1-3/C + Gnd, #2, 600 V, EPR insulation	527.18
Pull Rope	Soft-Fiber Polyester	0.00
S-3021-1	1-3/C + Gnd, #4, 600 V, EPR insulation	366.10
S-3022-1	1-3/C + Gnd, #4, 600 V, EPR insulation	366.10
S-3023-1	1-3/C + Gnd, #4, 600 V, EPR insulation	366.10

5

5 REVISED PER ADDENDUM No. 5 DATED JULY 30, 2009

CONDUIT AND TRAY SCHEDULE
UNDERGROUND

E-184

REVISED BY | DATE REVISED
CARMELO RIVERA | ELLERY LUCAS
CALCULATED-DESIGNED BY | CHECKED BY
CONSULTANT FUNCTIONAL SUPERVISOR
BEHZAD GOLEMOHAMMADI

STATE OF CALIFORNIA - DEPARTMENT OF TRANSPORTATION
Caltrans

LAST REVISION 00-00-00 | DATE PLOTTED => 28-JUL-2009 | TIME PLOTTED => 06:29

Dist	COUNTY	ROUTE	KILOMETER POST TOTAL PROJECT	SHEET No.	TOTAL SHEETS
04	SF	80	12.7/13.2	304	806

Caltrans Metric

2/14/08
REGISTERED ELECTRICAL ENGINEER

6-23-08
PLANS APPROVAL DATE

REGISTERED PROFESSIONAL ENGINEER FADI WALIEDDINE No. 11465 Exp. 12/31/09 ELECTRICAL STATE OF CALIFORNIA

THE STATE OF CALIFORNIA OR ITS OFFICERS OR AGENTS SHALL NOT BE RESPONSIBLE FOR THE ACCURACY OR COMPLETENESS OF ELECTRONIC COPIES OF THIS PLAN SHEET.

PB AMERICAS, Inc.
A Parsons Brinckerhoff Company
303 Second St., Suite 700N
San Francisco, CA 94107-1317

Conduit/Tray No:	*0355
Reference:	E-20, E-33
Size:	103
Type:	RGS conduit
From:	Sta 1 + 63
To:	(E) Manhole-16
Total Fill (mm2):	3002.00
Remarks:	Existing conduit, add new cable (s) and pull rope thru the entire length of the connected conduits as listed below.
Allowable Fill (mm2):	3324.51
Description of Changes:	

Included Cable No.	Conductor Type	Area (mm2)
A-1011-1	1-3/C + Gnd, #2, 600 V, EPR insulation	527.18
A-1012-1	1-3/C + Gnd, #2, 600 V, EPR insulation	527.18
A-1013-1	1-3/C + Gnd, #2, 600 V, EPR insulation	527.18
A-1014-1	1-3/C + Gnd, #2, 600 V, EPR insulation	527.18
Pull Rope	Soft-Fiber Polyester	0.00
S-1031-1	1-3/C + Gnd, #2, 600 V, EPR insulation	527.18
S-1032-1	1-3/C + Gnd, #4, 600 V, EPR insulation	366.10

5

Conduit/Tray No:	*0356
Reference:	E-20, E-33
Size:	103
Type:	RGS conduit
From:	Sta 1 + 63
To:	(E) Manhole-16
Total Fill (mm2):	2230.12
Remarks:	Existing conduit, add new cable (s) and pull rope thru the entire length of the connected conduits as listed below.
Allowable Fill (mm2):	3324.51
Description of Changes:	

Included Cable No.	Conductor Type	Area (mm2)
1106	1-3/C + Gnd, #6, 600 V, EPR insulation	324.29
A-1035-1	1-3/C + Gnd, #6, 600 V, EPR insulation	324.29
A-3011-1	1-3/C + Gnd, #2, 600 V, EPR insulation	527.18
A-3012-1	1-3/C + Gnd, #2, 600 V, EPR insulation	527.18
A-3013-1	1-3/C + Gnd, #2, 600 V, EPR insulation	527.18
Pull Rope	Soft-Fiber Polyester	0.00

Conduit/Tray No:	*0359
Reference:	E-21, E-33
Size:	103
Type:	RGS conduit
From:	Sta 1 + 63
To:	(E) Manhole-17
Total Fill (mm2):	2780.99
Remarks:	Existing conduit, add new cable (s) and pull rope thru the entire length of the connected conduits as listed below.
Allowable Fill (mm2):	3324.51
Description of Changes:	

Included Cable No.	Conductor Type	Area (mm2)
1391	3-1/C #4/0, 15 KV, EPR insulation	2780.99
Pull Rope	Soft-Fiber Polyester	0.00

5

Conduit/Tray No:	*0360
Reference:	E-21, E-33
Size:	103
Type:	RGS conduit
From:	Sta 1 + 63
To:	(E) Manhole-18
Total Fill (mm2):	647.30
Remarks:	Existing conduit, add new cable (s) and pull rope thru the entire length of the connected conduits as listed below.
Allowable Fill (mm2):	2576.49
Description of Changes:	

Included Cable No.	Conductor Type	Area (mm2)
1475-3	72 Fiber, single mode fiber optic riser cable	323.65
1477-1	72 Fiber, single mode fiber optic riser cable	323.65
Pull Rope	Soft-Fiber Polyester	0.00

Conduit/Tray No:	*0361
Reference:	E-21, E-33
Size:	103
Type:	RGS conduit
From:	Sta 1 + 63
To:	(E) Manhole-18
Total Fill (mm2):	0.00
Remarks:	Existing conduit, add new pull rope thru the entire length of the connected conduits as listed below.
Allowable Fill (mm2):	3324.51
Description of Changes:	

Included Cable No.	Conductor Type	Area (mm2)
Pull Rope	Soft-Fiber Polyester	0.00

Conduit/Tray No:	*0362
Reference:	E-21, E-33
Size:	103
Type:	RGS conduit
From:	Sta 1 + 63
To:	(E) Manhole-18
Total Fill (mm2):	1201.71
Remarks:	Existing conduit, add new cable (s) and pull rope thru the entire length of the connected conduits as listed below.
Allowable Fill (mm2):	4404.97
Description of Changes:	

Included Cable No.	Conductor Type	Area (mm2)
1474-4	50 pair #18, shielded pairs, IS/OS shield 600 V, XLPE insul., PVC jacket	1201.71
Pull Rope	Soft-Fiber Polyester	0.00

5 **REVISED PER ADDENDUM No. 5 DATED JULY 30, 2009**

CONDUIT AND TRAY SCHEDULE
UNDERGROUND

E-185

REVISED BY | DATE REVISED
CARMELO RIVERA | ELLERY LUCAS
CALCULATED-DESIGNED BY | CHECKED BY
CONSULTANT FUNCTIONAL SUPERVISOR
BEHZAD GOLEMOHAMMADI
STATE OF CALIFORNIA - DEPARTMENT OF TRANSPORTATION
Caltrans

LAST REVISION 00-00-00 | DATE PLOTTED => 28-JUL-2009 | TIME PLOTTED => 06:29

Dist	COUNTY	ROUTE	KILOMETER POST TOTAL PROJECT	SHEET No.	TOTAL SHEETS
04	SF	80	12.7/13.2	307	806

Caltrans Metric

2/14/08
REGISTERED ELECTRICAL ENGINEER

6-23-08
PLANS APPROVAL DATE

REGISTERED PROFESSIONAL ENGINEER FADI WALIEDDINE No. 11465 Exp. 12/31/09 ELECTRICAL STATE OF CALIFORNIA

THE STATE OF CALIFORNIA OR ITS OFFICERS OR AGENTS SHALL NOT BE RESPONSIBLE FOR THE ACCURACY OR COMPLETENESS OF ELECTRONIC COPIES OF THIS PLAN SHEET.

PB AMERICAS, Inc.
A Parsons Brinckerhoff Company
303 Second St., Suite 700N
San Francisco, CA 94107-1317

5

~~Conduit/Tray No: *0378 | Reference: E-20, E-33~~
~~Size: 103 | Type: RGS conduit~~
~~From: Sta 1 + 63 | To: (E) Manhole-16~~
~~Total Fill (mm2): 2152.66 | Remarks: Existing conduit, add new cable (s) and pull rope thru the entire length of the connected conduits as listed below.~~
~~Allowable Fill (mm2): 3324.51~~
~~Description of Changes:~~

Included Cable No.	Conductor Type	Area (mm2)
Pull Rope	Soft-Fiber Polyester	0.00
S-2031-1	1-3/C + Gnd, #2, 600 V, EPR insulation	527.18
S-2032-1	1-3/C + Gnd, #4, 600 V, EPR insulation	366.10
S-3051-1	1-3/C + Gnd, #4, 600 V, EPR insulation	366.10
S-3052-1	1-3/C + Gnd, #2, 600 V, EPR insulation	527.18
S-3053-1	1-3/C + Gnd, #4, 600 V, EPR insulation	366.10

Conduit/Tray No: *0379 | Reference: E-20, E-33
Size: 103 | Type: RGS conduit
From: Sta 1 + 63 | To: (E) Manhole-16
Total Fill (mm2): 2433.01 | Remarks: Existing conduit, add new cable (s) and pull rope thru the entire length of the connected conduits as listed below.
Allowable Fill (mm2): 3324.51
Description of Changes:

Included Cable No.	Conductor Type	Area (mm2)
A-2011-1	1-3/C + Gnd, #2, 600 V, EPR insulation	527.18
A-2012-1	1-3/C + Gnd, #2, 600 V, EPR insulation	527.18
A-2013-1	1-3/C + Gnd, #2, 600 V, EPR insulation	527.18
A-2014-1	1-3/C + Gnd, #2, 600 V, EPR insulation	527.18
A-2035-1	1-3/C + Gnd, #6, 600 V, EPR insulation	324.29
Pull Rope	Soft-Fiber Polyester	0.00

Conduit/Tray No: *0380 | Reference: E-20, E-33
Size: 103 | Type: RGS conduit
From: Sta 1 + 63 | To: (E) Manhole-16
Total Fill (mm2): 2635.90 | Remarks: Existing conduit, add new cable (s) and pull rope thru the entire length of the connected conduits as listed below.
Allowable Fill (mm2): 3324.51
Description of Changes:

Included Cable No.	Conductor Type	Area (mm2)
2095	1-3/C + Gnd, #2, 600 V, EPR insulation	527.18
2096	1-3/C + Gnd, #2, 600 V, EPR insulation	527.18
2097	1-3/C + Gnd, #2, 600 V, EPR insulation	527.18
2098	1-3/C + Gnd, #2, 600 V, EPR insulation	527.18
2099	1-3/C + Gnd, #2, 600 V, EPR insulation	527.18
Pull Rope	Soft-Fiber Polyester	0.00

Conduit/Tray No: *0383 | Reference: E-21, E-33
Size: 103 | Type: RGS conduit
From: Sta 1 + 63 | To: (E) Manhole-17
Total Fill (mm2): 2780.99 | Remarks: Existing conduit, add new cable (s) and pull rope thru the entire length of the connected conduits as listed below.
Allowable Fill (mm2): 3324.51
Description of Changes:

Included Cable No.	Conductor Type	Area (mm2)
2391	3-1/C #4/0, 15 KV, EPR insulation	2780.99
Pull Rope	Soft-Fiber Polyester	0.00

Conduit/Tray No: *0384 | Reference: E-21, E-33
Size: 103 | Type: RGS conduit
From: Sta 1 + 63 | To: (E) Manhole-17
Total Fill (mm2): 0.00 | Remarks: Existing conduit, add new pull rope thru the entire length of the connected conduits as listed below.
Allowable Fill (mm2): 3324.51
Description of Changes:

Included Cable No.	Conductor Type	Area (mm2)
Pull Rope	Soft-Fiber Polyester	0.00

Conduit/Tray No: *0385 | Reference: E-21, E-33
Size: 103 | Type: RGS conduit
From: Sta 1 + 63 | To: (E) Manhole-18
Total Fill (mm2): 0.00 | Remarks: Existing conduit, add new pull rope thru the entire length of the connected conduits as listed below.
Allowable Fill (mm2): 3324.51
Description of Changes:

Included Cable No.	Conductor Type	Area (mm2)
Pull Rope	Soft-Fiber Polyester	0.00

5 **REVISED PER ADDENDUM No. 5 DATED JULY 30, 2009**

CONDUIT AND TRAY SCHEDULE
UNDERGROUND

E-188

REVISED BY | DATE REVISED
CARMELO RIVERA | ELLERY LUCAS
CALCULATED-DESIGNED BY | CHECKED BY
CONSULTANT FUNCTIONAL SUPERVISOR
BEHZAD GOLEMOHAMMADI

STATE OF CALIFORNIA - DEPARTMENT OF TRANSPORTATION
Caltrans

LAST REVISION 00-00-00 | DATE PLOTTED => 28-JUL-2009 | TIME PLOTTED => 06:30

Dist	COUNTY	ROUTE	KILOMETER POST TOTAL PROJECT	SHEET No.	TOTAL SHEETS
04	SF	80	12.7/13.2	309	806

2/14/08
REGISTERED ELECTRICAL ENGINEER

6-23-08
PLANS APPROVAL DATE

REGISTERED PROFESSIONAL ENGINEER
FADI WALIEDDINE
No. 11465
Exp. 12/31/09
ELECTRICAL
STATE OF CALIFORNIA

THE STATE OF CALIFORNIA OR ITS OFFICERS OR AGENTS SHALL NOT BE RESPONSIBLE FOR THE ACCURACY OR COMPLETENESS OF ELECTRONIC COPIES OF THIS PLAN SHEET.

PB AMERICAS, Inc.
A Parsons Brinckerhoff Company
303 Second St., Suite 700N
San Francisco, CA 94107-1317

5 Caltrans Metric

~~Conduit/Tray No: *0504 | Reference: E-34, E-23~~
~~Size: 103 | Type: RGS conduit~~
~~From: (E) Manhole-22 | To: Sta 4 + 85~~
~~Total Fill (mm2): 2380.12 | Remarks: Existing conduit, add new cable (s) and pull rope thru the entire length of the connected conduits as listed below.~~
~~Allowable Fill (mm2): 3324.51~~
~~Description of Changes:~~

Included Cable No.	Conductor Type	Area (mm2)
A-3008-1	1-2/C + Gnd, #8, 600 V, EPR insulation	227.46
A-3009-1	1-3/C + Gnd, #2, 600 V, EPR insulation	527.18
A-3010-1	1-3/C + Gnd, #2, 600 V, EPR insulation	527.18
Pull Rope	Soft-Fiber Polyester	0.00
S-3021-1	1-3/C + Gnd, #4, 600 V, EPR insulation	366.10
S-3022-1	1-3/C + Gnd, #4, 600 V, EPR insulation	366.10
S-3023-1	1-3/C + Gnd, #4, 600 V, EPR insulation	366.10

Conduit/Tray No: *0505 | Reference: E-34, E-23
Size: 103 | Type: RGS conduit
From: (E) Manhole-22 | To: Sta 4 + 85
Total Fill (mm2): 3002.00 | Remarks: Existing conduit, add new cable (s) and pull rope thru the entire length of the connected conduits as listed below.
Allowable Fill (mm2): 3324.51
Description of Changes:

Included Cable No.	Conductor Type	Area (mm2)
A-1011-1	1-3/C + Gnd, #2, 600 V, EPR insulation	527.18
A-1012-1	1-3/C + Gnd, #2, 600 V, EPR insulation	527.18
A-1013-1	1-3/C + Gnd, #2, 600 V, EPR insulation	527.18
A-1014-1	1-3/C + Gnd, #2, 600 V, EPR insulation	527.18
Pull Rope	Soft-Fiber Polyester	0.00
S-1031-1	1-3/C + Gnd, #2, 600 V, EPR insulation	527.18
S-1032-1	1-3/C + Gnd, #4, 600 V, EPR insulation	366.10

~~Conduit/Tray No: *0506 | Reference: E-34, E-23~~
~~Size: 103 | Type: RGS conduit~~
~~From: (E) Manhole-22 | To: Sta 4 + 85~~
~~Total Fill (mm2): 2230.12 | Remarks: Existing conduit, add new cable (s) and pull rope thru the entire length of the connected conduits as listed below.~~
~~Allowable Fill (mm2): 3324.51~~
~~Description of Changes:~~

Included Cable No.	Conductor Type	Area (mm2)
1106	1-3/C + Gnd, #6, 600 V, EPR insulation	324.29
A-1035-1	1-3/C + Gnd, #6, 600 V, EPR insulation	324.29
A-3011-1	1-3/C + Gnd, #2, 600 V, EPR insulation	527.18
A-3012-1	1-3/C + Gnd, #2, 600 V, EPR insulation	527.18
A-3013-1	1-3/C + Gnd, #2, 600 V, EPR insulation	527.18
Pull Rope	Soft-Fiber Polyester	0.00

Conduit/Tray No: *0509 | Reference: E-34, E-24, E-26
Size: 103 | Type: RGS conduit
From: (E) Manhole-23 | To: Sta 4 + 85
Total Fill (mm2): 2780.99 | Remarks: Existing conduit, add new cable (s) and pull rope thru the entire length of the connected conduits as listed below.
Allowable Fill (mm2): 3324.51
Description of Changes:

Included Cable No.	Conductor Type	Area (mm2)
1391	3-1/C #4/0, 15 KV, EPR insulation	2780.99
Pull Rope	Soft-Fiber Polyester	0.00

~~Conduit/Tray No: *0510 | Reference: E-34, E-24~~
~~Size: 103 | Type: RGS conduit~~
~~From: (E) Manhole-24 | To: Sta 4 + 85~~
~~Total Fill (mm2): 647.30 | Remarks: Existing conduit, add new cable (s) and pull rope thru the entire length of the connected conduits as listed below.~~
~~Allowable Fill (mm2): 2576.49~~
~~Description of Changes:~~

Included Cable No.	Conductor Type	Area (mm2)
1475-3	72 Fiber, single mode fiber optic riser cable	323.65
1477-1	72 Fiber, single mode fiber optic riser cable	323.65
Pull Rope	Soft-Fiber Polyester	0.00

Conduit/Tray No: *0511 | Reference: E-34, E-24
Size: 103 | Type: RGS conduit
From: (E) Manhole-24 | To: Sta 4 + 85
Total Fill (mm2): 0.00 | Remarks: Existing conduit, add new pull rope thru the entire length of the connected conduits as listed below.
Allowable Fill (mm2): 3324.51
Description of Changes:

Included Cable No.	Conductor Type	Area (mm2)
Pull Rope	Soft-Fiber Polyester	0.00

REVISED BY | DATE REVISED
CARMELO RIVERA | ELLERY LUCAS
CALCULATED-DESIGNED BY | CHECKED BY
CONSULTANT FUNCTIONAL SUPERVISOR
BEHZAD GOLEMOHAMMADI
STATE OF CALIFORNIA - DEPARTMENT OF TRANSPORTATION
Caltrans

CONDUIT AND TRAY SCHEDULE
UNDERGROUND

5 REVISED PER ADDENDUM No. 5 DATED JULY 30, 2009

E-190

LAST REVISION 00-00-00 | DATE PLOTTED => 28-JUL-2009 | TIME PLOTTED => 06:30

Dist	COUNTY	ROUTE	KILOMETER POST TOTAL PROJECT	SHEET No.	TOTAL SHEETS
04	SF	80	12.7/13.2	312	806

REGISTERED ELECTRICAL ENGINEER 2/14/08

6-23-08
PLANS APPROVAL DATE

REGISTERED PROFESSIONAL ENGINEER FADI WALIEDDINE No. 11465 Exp. 12/31/09 ELECTRICAL STATE OF CALIFORNIA

THE STATE OF CALIFORNIA OR ITS OFFICERS OR AGENTS SHALL NOT BE RESPONSIBLE FOR THE ACCURACY OR COMPLETENESS OF ELECTRONIC COPIES OF THIS PLAN SHEET.

PB AMERICAS, Inc.
A Parsons Brinckerhoff Company
303 Second St., Suite 700N
San Francisco, CA 94107-1317

Caltrans Metric

Conduit/Tray No:	*0527
Reference:	E-34, E-23
Size:	103
Type:	RGS conduit
From:	(E) Manhole-22
To:	Sta 4 + 85
Total Fill (mm2):	3163.08
Remarks:	Existing conduit, add new cable (s) and pull rope thru the entire length of the connected conduits as listed below.
Allowable Fill (mm2):	3324.51
Description of Changes:	

Included Cable No.	Conductor Type	Area (mm2)
A-3039-1	1-3/C + Gnd, #2, 600 V, EPR insulation	527.18
A-3040-1	1-3/C + Gnd, #2, 600 V, EPR insulation	527.18
A-3041-1	1-3/C + Gnd, #2, 600 V, EPR insulation	527.18
A-3042-1	1-3/C + Gnd, #2, 600 V, EPR insulation	527.18
A-3043-1	1-3/C + Gnd, #2, 600 V, EPR insulation	527.18
A-3057-1	1-3/C + Gnd, #2, 600 V, EPR insulation	527.18
Pull Rope	Soft-Fiber Polyester	0.00

5

Conduit/Tray No:	*0528
Reference:	E-34, E-23
Size:	103
Type:	RGS conduit
From:	(E) Manhole-22
To:	Sta 4 + 85
Total Fill (mm2):	2152.66
Remarks:	Existing conduit, add new cable (s) and pull rope thru the entire length of the connected conduits as listed below.
Allowable Fill (mm2):	3324.51
Description of Changes:	

Included Cable No.	Conductor Type	Area (mm2)
Pull Rope	Soft-Fiber Polyester	0.00
S-2031-1	1-3/C + Gnd, #2, 600 V, EPR insulation	527.18
S-2032-1	1-3/C + Gnd, #4, 600 V, EPR insulation	366.10
S-3051-1	1-3/C + Gnd, #4, 600 V, EPR insulation	366.10
S-3052-1	1-3/C + Gnd, #2, 600 V, EPR insulation	527.18
S-3053-1	1-3/C + Gnd, #4, 600 V, EPR insulation	366.10

Conduit/Tray No:	*0529
Reference:	E-34, E-23
Size:	103
Type:	RGS conduit
From:	(E) Manhole-22
To:	Sta 4 + 85
Total Fill (mm2):	2433.01
Remarks:	Existing conduit, add new cable (s) and pull rope thru the entire length of the connected conduits as listed below.
Allowable Fill (mm2):	3324.51
Description of Changes:	

Included Cable No.	Conductor Type	Area (mm2)
A-2011-1	1-3/C + Gnd, #2, 600 V, EPR insulation	527.18
A-2012-1	1-3/C + Gnd, #2, 600 V, EPR insulation	527.18
A-2013-1	1-3/C + Gnd, #2, 600 V, EPR insulation	527.18
A-2014-1	1-3/C + Gnd, #2, 600 V, EPR insulation	527.18
A-2035-1	1-3/C + Gnd, #6, 600 V, EPR insulation	324.29
Pull Rope	Soft-Fiber Polyester	0.00

Conduit/Tray No:	*0530
Reference:	E-34, E-23
Size:	103
Type:	RGS conduit
From:	(E) Manhole-22
To:	Sta 4 + 85
Total Fill (mm2):	2635.90
Remarks:	Existing conduit, add new cable (s) and pull rope thru the entire length of the connected conduits as listed below.
Allowable Fill (mm2):	3324.51
Description of Changes:	

Included Cable No.	Conductor Type	Area (mm2)
2095	1-3/C + Gnd, #2, 600 V, EPR insulation	527.18
2096	1-3/C + Gnd, #2, 600 V, EPR insulation	527.18
2097	1-3/C + Gnd, #2, 600 V, EPR insulation	527.18
2098	1-3/C + Gnd, #2, 600 V, EPR insulation	527.18
2099	1-3/C + Gnd, #2, 600 V, EPR insulation	527.18
Pull Rope	Soft-Fiber Polyester	0.00

Conduit/Tray No:	*0533
Reference:	E-34, E-24
Size:	103
Type:	RGS conduit
From:	(E) Manhole-23
To:	Sta 4 + 85
Total Fill (mm2):	2780.99
Remarks:	Existing conduit, add new cable (s) and pull rope thru the entire length of the connected conduits as listed below.
Allowable Fill (mm2):	3324.51
Description of Changes:	

Included Cable No.	Conductor Type	Area (mm2)
2391	3-1/C #4/0, 15 KV, EPR insulation	2780.99
Pull Rope	Soft-Fiber Polyester	0.00

Conduit/Tray No:	*0534
Reference:	E-34, E-24
Size:	103
Type:	RGS conduit
From:	(E) Manhole-23
To:	Sta 4 + 85
Total Fill (mm2):	0.00
Remarks:	Existing conduit, add new pull rope thru the entire length of the connected conduits as listed below.
Allowable Fill (mm2):	3324.51
Description of Changes:	

Included Cable No.	Conductor Type	Area (mm2)
Pull Rope	Soft-Fiber Polyester	0.00

REVISED BY | DATE REVISED
CARMELO RIVERA | ELLERY LUCAS
CALCULATED-DESIGNED BY | CHECKED BY
CONSULTANT FUNCTIONAL SUPERVISOR
BEHZAD GOLEMOHAMMADI

STATE OF CALIFORNIA - DEPARTMENT OF TRANSPORTATION
Caltrans

5 REVISED PER ADDENDUM No. 5 DATED JULY 30, 2009

CONDUIT AND TRAY SCHEDULE
UNDERGROUND

E-193

LAST REVISION 00-00-00 | DATE PLOTTED => 28-JUL-2009 | TIME PLOTTED => 06:30

Dist	COUNTY	ROUTE	KILOMETER POST TOTAL PROJECT	SHEET No.	TOTAL SHEETS
04	SF	80	12.7/13.2	313	806

Caltrans Metric

2/14/08
REGISTERED ELECTRICAL ENGINEER

6-23-08
PLANS APPROVAL DATE

REGISTERED PROFESSIONAL ENGINEER
FADI WALIEDDINE
No. 11465
Exp. 12/31/09
ELECTRICAL
STATE OF CALIFORNIA

THE STATE OF CALIFORNIA OR ITS OFFICERS OR AGENTS SHALL NOT BE RESPONSIBLE FOR THE ACCURACY OR COMPLETENESS OF ELECTRONIC COPIES OF THIS PLAN SHEET.

PB AMERICAS, Inc.
A Parsons Brinckerhoff Company
303 Second St., Suite 700N
San Francisco, CA 94107-1317

Conduit/Tray No:	*0535
Reference:	E-34, E-24
Size:	103
Type:	RGS conduit
From:	(E) Manhole-24
To:	Sta 4 + 85
Total Fill (mm2):	0.00
Allowable Fill (mm2):	3324.51
Remarks:	Existing conduit, add new pull rope thru the entire length of the connected conduits as listed below.
Description of Changes:	

Included Cable No.	Conductor Type	Area (mm2)
Pull Rope	Soft-Fiber Polyester	0.00

~~Conduit/Tray No: *0536 — Reference: E-34, E-24~~
~~Size: 103 — Type: RGS conduit~~
~~From: (E) Manhole-24 — To: Sta 4 + 85~~
~~Total Fill (mm2): 0.00 — Allowable Fill (mm2): 3324.51~~
~~Remarks: Existing conduit, add new pull rope thru the entire length of the connected conduits as listed below.~~
~~Description of Changes:~~

Included Cable No.	Conductor Type	Area (mm2)
Pull Rope	Soft-Fiber Polyester	0.00

5

Conduit/Tray No:	*0537
Reference:	E-34, E-24
Size:	103
Type:	RGS conduit
From:	(E) Manhole-24
To:	Sta 4 + 85
Total Fill (mm2):	1201.71
Allowable Fill (mm2):	4404.97
Remarks:	Existing conduit, add new cable (s) and pull rope thru the entire length of the connected conduits as listed below.
Description of Changes:	

Included Cable No.	Conductor Type	Area (mm2)
1473-4	50 pair #18, shielded pairs, IS/OS shield 600 V, XLPE insul., PVC jacket	1201.71
Pull Rope	Soft-Fiber Polyester	0.00

Conduit/Tray No:	0071
Reference:	E-32, E-16
Size:	103
Type:	RGS conduit
From:	*0071
To:	Manhole-7
Total Fill (mm2):	1054.36
Allowable Fill (mm2):	3324.51
Remarks:	Connect new conduit to existing conduit. Add new cable (s) and pull rope thru the entire length of the connected conduits as listed below.
Description of Changes:	

Included Cable No.	Conductor Type	Area (mm2)
2123-2	1-3/C + Gnd, #2, 600 V, EPR insulation	527.18
2123-3	1-3/C + Gnd, #2, 600 V, EPR insulation	527.18
Pull Rope	Soft-Fiber Polyester	0.00

Conduit/Tray No:	0072
Reference:	E-32, E-16
Size:	103
Type:	RGS conduit
From:	*0072
To:	Manhole-7
Total Fill (mm2):	0.00
Allowable Fill (mm2):	3324.51
Remarks:	Connect new conduit to existing conduit. Add new pull rope thru the entire length of the connected conduits as listed below.
Description of Changes:	

Included Cable No.	Conductor Type	Area (mm2)
Pull Rope	Soft-Fiber Polyester	0.00

Conduit/Tray No:	0073
Reference:	E-32, E-16
Size:	103
Type:	RGS conduit
From:	*0073
To:	Manhole-7
Total Fill (mm2):	0.00
Allowable Fill (mm2):	3324.51
Remarks:	Connect new conduit to existing conduit. Add new pull rope thru the entire length of the connected conduits as listed below.
Description of Changes:	

Included Cable No.	Conductor Type	Area (mm2)
Pull Rope	Soft-Fiber Polyester	0.00

Conduit/Tray No:	0074
Reference:	E-32, E-16
Size:	103
Type:	RGS conduit
From:	*0074
To:	Manhole-7
Total Fill (mm2):	0.00
Allowable Fill (mm2):	3324.51
Remarks:	Connect new conduit to existing conduit. Add new pull rope thru the entire length of the connected conduits as listed below.
Description of Changes:	

Included Cable No.	Conductor Type	Area (mm2)
Pull Rope	Soft-Fiber Polyester	0.00

CONDUIT AND TRAY SCHEDULE
UNDERGROUND

5 REVISED PER ADDENDUM No. 5 DATED JULY 30, 2009

E-194

REVISED BY | DATE REVISED
CARMELO RIVERA | ELLERY LUCAS
CALCULATED-DESIGNED BY | CHECKED BY
CONSULTANT FUNCTIONAL SUPERVISOR
BEHZAD GOLEMOHAMMADI
STATE OF CALIFORNIA - DEPARTMENT OF TRANSPORTATION
Caltrans

LAST REVISION 00-00-00 | DATE PLOTTED => 28-JUL-2009 | TIME PLOTTED => 06:30

Dist	COUNTY	ROUTE	KILOMETER POST TOTAL PROJECT	SHEET No.	TOTAL SHEETS
04	SF	80	12.7/13.2	314	806

Caltrans Metric

2/14/08
REGISTERED ELECTRICAL ENGINEER

6-23-08
PLANS APPROVAL DATE

REGISTERED PROFESSIONAL ENGINEER FADI WALIEDDINE No. 11465 Exp. 12/31/09 ELECTRICAL STATE OF CALIFORNIA

THE STATE OF CALIFORNIA OR ITS OFFICERS OR AGENTS SHALL NOT BE RESPONSIBLE FOR THE ACCURACY OR COMPLETENESS OF ELECTRONIC COPIES OF THIS PLAN SHEET.

PB AMERICAS, Inc.
A Parsons Brinckerhoff Company
303 Second St., Suite 700N
San Francisco, CA 94107-1317

Conduit/Tray No:	0075
Reference:	E-32, E-16
Size:	103
Type:	RGS conduit
From:	*0075
To:	Manhole-7
Total Fill (mm2):	0.00
Allowable Fill (mm2):	3324.51
Remarks:	Connect new conduit to existing conduit. Add new pull rope thru the entire length of the connected conduits as listed below.
Description of Changes:	

Included Cable No.	Conductor Type	Area (mm2)
Pull Rope	Soft-Fiber Polyester	0.00

Conduit/Tray No:	0076
Reference:	E-32, E-16
Size:	103
Type:	RGS conduit
From:	*0076
To:	Manhole-7
Total Fill (mm2):	0.00
Allowable Fill (mm2):	3324.51
Remarks:	Connect new conduit to existing conduit. Add new pull rope thru the entire length of the connected conduits as listed below.
Description of Changes:	

Included Cable No.	Conductor Type	Area (mm2)
Pull Rope	Soft-Fiber Polyester	0.00

Conduit/Tray No:	0077
Reference:	E-32, E-16
Size:	103
Type:	RGS conduit
From:	*0077
To:	Manhole-7
Total Fill (mm2):	2635.90
Allowable Fill (mm2):	3324.51
Remarks:	Connect new conduit to existing conduit. Add new cable (s) and pull rope thru the entire length of the connected conduits as listed below.
Description of Changes:	

Included Cable No.	Conductor Type	Area (mm2)
2103	1-3/C + Gnd, #2, 600 V, EPR insulation	527.18
2104	1-3/C + Gnd, #2, 600 V, EPR insulation	527.18
2105	1-3/C + Gnd, #2, 600 V, EPR insulation	527.18
2106	1-3/C + Gnd, #2, 600 V, EPR insulation	527.18
2107	1-3/C + Gnd, #2, 600 V, EPR insulation	527.18
Pull Rope	Soft-Fiber Polyester	0.00

Conduit/Tray No:	0078
Reference:	E-32, E-16
Size:	103
Type:	RGS conduit
From:	*0078
To:	Manhole-7
Total Fill (mm2):	2518.76
Allowable Fill (mm2):	3324.51
Remarks:	Connect new conduit to existing conduit. Add new cable (s) and pull rope thru the entire length of the connected conduits as listed below.
Description of Changes:	

Included Cable No.	Conductor Type	Area (mm2)
A-3031-1	1-3/C + Gnd, #4, 600 V, EPR insulation	366.10
A-3032-1	1-3/C + Gnd, #4, 600 V, EPR insulation	366.10
A-3033-1	1-3/C + Gnd, #2, 600 V, EPR insulation	527.18
A-3034-1	1-3/C + Gnd, #2, 600 V, EPR insulation	527.18
A-3035-1	1-3/C + Gnd, #4, 600 V, EPR insulation	366.10
A-3036-1	1-3/C + Gnd, #4, 600 V, EPR insulation	366.10
Pull Rope	Soft-Fiber Polyester	0.00

Conduit/Tray No:	0079
Reference:	E-32, E-16
Size:	103
Type:	RGS conduit
From:	*0079
To:	Manhole-7
Total Fill (mm2):	3163.08
Allowable Fill (mm2):	3324.51
Remarks:	Connect new conduit to existing conduit. Add new cable (s) and pull rope thru the entire length of the connected conduits as listed below.
Description of Changes:	

Included Cable No.	Conductor Type	Area (mm2)
A-3039-1	1-3/C + Gnd, #2, 600 V, EPR insulation	527.18
A-3040-1	1-3/C + Gnd, #2, 600 V, EPR insulation	527.18
A-3041-1	1-3/C + Gnd, #2, 600 V, EPR insulation	527.18
A-3042-1	1-3/C + Gnd, #2, 600 V, EPR insulation	527.18
A-3043-1	1-3/C + Gnd, #2, 600 V, EPR insulation	527.18
A-3057-1	1-3/C + Gnd, #2, 600 V, EPR insulation	527.18
Pull Rope	Soft-Fiber Polyester	0.00

5

Conduit/Tray No:	0080
Reference:	E-32, E-16
Size:	103
Type:	RGS conduit
From:	*0080
To:	Manhole-7
Total Fill (mm2):	2152.66
Allowable Fill (mm2):	3324.51
Remarks:	Connect new conduit to existing conduit. Add new cable (s) and pull rope thru the entire length of the connected conduits as listed below.
Description of Changes:	

Included Cable No.	Conductor Type	Area (mm2)
Pull Rope	Soft-Fiber Polyester	0.00
S-2031-1	1-3/C + Gnd, #2, 600 V, EPR insulation	527.18
S-2032-1	1-3/C + Gnd, #4, 600 V, EPR insulation	366.10
S-3051-1	1-3/C + Gnd, #4, 600 V, EPR insulation	366.10
S-3052-1	1-3/C + Gnd, #2, 600 V, EPR insulation	527.18
S-3053-1	1-3/C + Gnd, #4, 600 V, EPR insulation	366.10

CONDUIT AND TRAY SCHEDULE
UNDERGROUND

5 REVISED PER ADDENDUM No. 5 DATED JULY 30, 2009

E-195

STATE OF CALIFORNIA - DEPARTMENT OF TRANSPORTATION
Caltrans

CONSULTANT FUNCTIONAL SUPERVISOR: BEHZAD GOLEMOHAMMADI
CALCULATED-DESIGNED BY: CARMELO RIVERA
CHECKED BY: ELLERY LUCAS
REVISED BY
DATE REVISED

LAST REVISION 00-00-00
DATE PLOTTED => 28-JUL-2009
TIME PLOTTED => 06:31

Dist	COUNTY	ROUTE	KILOMETER POST TOTAL PROJECT	SHEET No.	TOTAL SHEETS
04	SF	80	12.7/13.2	316	806

Caltrans Metric

2/14/08
REGISTERED ELECTRICAL ENGINEER

6-23-08
PLANS APPROVAL DATE

REGISTERED PROFESSIONAL ENGINEER FADI WALIEDDINE No. 11465 Exp. 12/31/09 ELECTRICAL STATE OF CALIFORNIA

THE STATE OF CALIFORNIA OR ITS OFFICERS OR AGENTS SHALL NOT BE RESPONSIBLE FOR THE ACCURACY OR COMPLETENESS OF ELECTRONIC COPIES OF THIS PLAN SHEET.

PB AMERICAS, Inc.
A Parsons Brinckerhoff Company
303 Second St., Suite 700N
San Francisco, CA 94107-1317

Conduit/Tray No:	0099
Reference:	E-30, E-31, E-14
Size:	103
Type:	RGS conduit
From:	(E) COM-YBI
To:	(E) Manhole-4
Total Fill (mm2):	1201.71
Remarks:	Existing conduit, add new cable (s) and pull rope thru the entire length of the connected conduits as listed below.
Allowable Fill (mm2):	4404.97
Description of Changes:	

Included Cable No.	Conductor Type	Area (mm2)
1474-1	50 pair #18, shielded pairs, IS/OS shield 600 V, XLPE insul., PVC jacket	1201.71
Pull Rope	Soft-Fiber Polyester	0.00

Conduit/Tray No:	0101
Reference:	E-30, E-31, E-14
Size:	103
Type:	RGS conduit
From:	(E) 12.47 kV Switchgear
To:	(E) Manhole-6
Total Fill (mm2):	2780.99
Remarks:	Existing conduit, add new cable (s) and pull rope thru the entire length of the connected conduits as listed below.
Allowable Fill (mm2):	3324.51
Description of Changes:	

Included Cable No.	Conductor Type	Area (mm2)
1391	3-1/C #4/0, 15 KV, EPR insulation	2780.99
Pull Rope	Soft-Fiber Polyester	0.00

Conduit/Tray No:	0102
Reference:	E-30, E-31, E-14
Size:	103
Type:	RGS conduit
From:	(E) 12.47 kV Switchgear
To:	(E) Manhole-6
Total Fill (mm2):	2780.99
Remarks:	Existing conduit, add new cable (s) and pull rope thru the entire length of the connected conduits as listed below.
Allowable Fill (mm2):	3324.51
Description of Changes:	

Included Cable No.	Conductor Type	Area (mm2)
2391	3-1/C #4/0, 15 KV, EPR insulation	2780.99
Pull Rope	Soft-Fiber Polyester	0.00

5

Conduit/Tray No:	0110
Reference:	E-30, E15, E-31
Size:	103
Type:	RGS conduit
From:	(E) 600 V Pull Box
To:	(E) Manhole-5
Total Fill (mm2):	2536.74
Remarks:	Existing conduit, add new cable (s) and pull rope thru the entire length of the connected conduits as listed below.
Allowable Fill (mm2):	3324.51
Description of Changes:	

Included Cable No.	Conductor Type	Area (mm2)
2091	1-3/C + Gnd, #4, 600 V, EPR insulation	366.10
2092	1-3/C + Gnd, #4, 600 V, EPR insulation	366.10
2093	1-3/C + Gnd, #4, 600 V, EPR insulation	366.10
2094	1-3/C + Gnd, #2, 600 V, EPR insulation	527.18
A-2005-1	1-3/C + Gnd, #8, 600 V, EPR insulation	262.68
A-2007-1	1-3/C + Gnd, #6, 600 V, EPR insulation	324.29
A-2009-1	1-3/C + Gnd, #6, 600 V, EPR insulation	324.29
Pull Rope	Soft-Fiber Polyester	0.00

5

Conduit/Tray No:	0111
Reference:	E-30, E15, E-31
Size:	103
Type:	RGS conduit
From:	(E) 600 V Pull Box
To:	(E) Manhole-5
Total Fill (mm2):	1464.40
Remarks:	Existing conduit, add new cable (s) and pull rope thru the entire length of the connected conduits as listed below.
Allowable Fill (mm2):	3324.51
Description of Changes:	

Included Cable No.	Conductor Type	Area (mm2)
2100	1-3/C + Gnd, #4, 600 V, EPR insulation	366.10
2101	1-3/C + Gnd, #4, 600 V, EPR insulation	366.10
2102	1-3/C + Gnd, #4, 600 V, EPR insulation	366.10
A-2008-1	1-3/C + Gnd, #4, 600 V, EPR insulation	366.10
Pull Rope	Soft-Fiber Polyester	0.00

Conduit/Tray No:	0112
Reference:	E-30, E15, E-31
Size:	103
Type:	RGS conduit
From:	(E) 600 V Pull Box
To:	(E) Manhole-5
Total Fill (mm2):	1297.16
Remarks:	Existing conduit, add new cable (s) and pull rope thru the entire length of the connected conduits as listed below.
Allowable Fill (mm2):	3324.51
Description of Changes:	

Included Cable No.	Conductor Type	Area (mm2)
Pull Rope	Soft-Fiber Polyester	0.00
S-2023-1	1-3/C + Gnd, #6, 600 V, EPR insulation	324.29
S-2024-1	1-3/C + Gnd, #6, 600 V, EPR insulation	324.29
S-2041-1	1-3/C + Gnd, #6, 600 V, EPR insulation	324.29
S-2042-1	1-3/C + Gnd, #6, 600 V, EPR insulation	324.29

5 **REVISED PER ADDENDUM No. 5 DATED JULY 30, 2009**

CONDUIT AND TRAY SCHEDULE
UNDERGROUND

E-197

REVISED BY | DATE REVISED
CARMELO RIVERA | ELLERY LUCAS
CALCULATED-DESIGNED BY | CHECKED BY
CONSULTANT FUNCTIONAL SUPERVISOR
BEHZAD GOLEMOHAMMADI
STATE OF CALIFORNIA - DEPARTMENT OF TRANSPORTATION
Caltrans

LAST REVISION 00-00-00 | DATE PLOTTED => 28-JUL-2009 | TIME PLOTTED => 06:31

Dist	COUNTY	ROUTE	KILOMETER POST TOTAL PROJECT	SHEET No.	TOTAL SHEETS
04	SF	80	12.7/13.2	317	806

Caltrans Metric

2/14/08
REGISTERED ELECTRICAL ENGINEER

6-23-08
PLANS APPROVAL DATE

REGISTERED PROFESSIONAL ENGINEER
FADI WALIEDDINE
No. 11465
Exp. 12/31/09
ELECTRICAL
STATE OF CALIFORNIA

THE STATE OF CALIFORNIA OR ITS OFFICERS OR AGENTS SHALL NOT BE RESPONSIBLE FOR THE ACCURACY OR COMPLETENESS OF ELECTRONIC COPIES OF THIS PLAN SHEET.

PB AMERICAS, Inc.
A Parsons Brinckerhoff Company
303 Second St., Suite 700N
San Francisco, CA 94107-1317

Conduit/Tray No:	0113
Reference:	E-30, E15, E-31
Size:	103
Type:	RGS conduit
From:	(E) 600 V Pull Box
To:	(E) Manhole-5
Total Fill (mm2):	2518.76
Remarks:	Existing conduit, add new cable (s) and pull rope thru the entire length of the connected conduits as listed below.
Allowable Fill (mm2):	3324.51
Description of Changes:	

Included Cable No.	Conductor Type	Area (mm2)
A-3001-1	1-3/C + Gnd, #4, 600 V, EPR insulation	366.10
A-3002-1	1-3/C + Gnd, #4, 600 V, EPR insulation	366.10
A-3003-1	1-3/C + Gnd, #4, 600 V, EPR insulation	366.10
A-3004-1	1-3/C + Gnd, #2, 600 V, EPR insulation	527.18
A-3005-1	1-3/C + Gnd, #2, 600 V, EPR insulation	527.18
A-3006-1	1-3/C + Gnd, #4, 600 V, EPR insulation	366.10
Pull Rope	Soft-Fiber Polyester	0.00

Conduit/Tray No:	0114
Reference:	E-30, E15, E-31
Size:	103
Type:	RGS conduit
From:	(E) 600 V Pull Box
To:	(E) Manhole-5
Total Fill (mm2):	2635.90
Remarks:	Existing conduit, add new cable (s) and pull rope thru the entire length of the connected conduits as listed below.
Allowable Fill (mm2):	3324.51
Description of Changes:	

Included Cable No.	Conductor Type	Area (mm2)
1095	1-3/C + Gnd, #2, 600 V, EPR insulation	527.18
1096	1-3/C + Gnd, #2, 600 V, EPR insulation	527.18
1097	1-3/C + Gnd, #2, 600 V, EPR insulation	527.18
1098	1-3/C + Gnd, #2, 600 V, EPR insulation	527.18
1099	1-3/C + Gnd, #2, 600 V, EPR insulation	527.18
Pull Rope	Soft-Fiber Polyester	0.00

5

Conduit/Tray No:	0115
Reference:	E-30, E15, E-31
Size:	103
Type:	RGS conduit
From:	(E) 600 V Pull Box
To:	(E) Manhole-5
Total Fill (mm2):	2380.12
Remarks:	Existing conduit, add new cable (s) and pull rope thru the entire length of the connected conduits as listed below.
Allowable Fill (mm2):	3324.51
Description of Changes:	

Included Cable No.	Conductor Type	Area (mm2)
A-3008-1	1-2/C + Gnd, #8, 600 V, EPR insulation	227.46
A-3009-1	1-3/C + Gnd, #2, 600 V, EPR insulation	527.18
A-3010-1	1-3/C + Gnd, #2, 600 V, EPR insulation	527.18
Pull Rope	Soft-Fiber Polyester	0.00
S-3021-1	1-3/C + Gnd, #4, 600 V, EPR insulation	366.10
S-3022-1	1-3/C + Gnd, #4, 600 V, EPR insulation	366.10
S-3023-1	1-3/C + Gnd, #4, 600 V, EPR insulation	366.10

Conduit/Tray No:	0116
Reference:	E-30, E15, E-31
Size:	103
Type:	RGS conduit
From:	(E) 600 V Pull Box
To:	(E) Manhole-5
Total Fill (mm2):	2554.41
Remarks:	Existing conduit, add new cable (s) and pull rope thru the entire length of the connected conduits as listed below.
Allowable Fill (mm2):	3324.51
Description of Changes:	

Included Cable No.	Conductor Type	Area (mm2)
1106	1-3/C + Gnd, #6, 600 V, EPR insulation	324.29
A-1035-1	1-3/C + Gnd, #6, 600 V, EPR insulation	324.29
A-3011-1	1-3/C + Gnd, #2, 600 V, EPR insulation	527.18
A-3012-1	1-3/C + Gnd, #2, 600 V, EPR insulation	527.18
A-3013-1	1-3/C + Gnd, #2, 600 V, EPR insulation	527.18
Pull Rope	Soft-Fiber Polyester	0.00
S-3056-1	1-3/C + Gnd, #6, 600 V, EPR insulation	324.29

Conduit/Tray No:	0123
Reference:	E-30, E15, E-31
Size:	103
Type:	RGS conduit
From:	(E) 600 V Pull Box
To:	(E) Manhole-5
Total Fill (mm2):	3002.00
Remarks:	Existing conduit, add new cable (s) and pull rope thru the entire length of the connected conduits as listed below.
Allowable Fill (mm2):	3324.51
Description of Changes:	

Included Cable No.	Conductor Type	Area (mm2)
A-1011-1	1-3/C + Gnd, #2, 600 V, EPR insulation	527.18
A-1012-1	1-3/C + Gnd, #2, 600 V, EPR insulation	527.18
A-1013-1	1-3/C + Gnd, #2, 600 V, EPR insulation	527.18
A-1014-1	1-3/C + Gnd, #2, 600 V, EPR insulation	527.18
Pull Rope	Soft-Fiber Polyester	0.00
S-1031-1	1-3/C + Gnd, #2, 600 V, EPR insulation	527.18
S-1032-1	1-3/C + Gnd, #4, 600 V, EPR insulation	366.10

5 **REVISED PER ADDENDUM No. 5 DATED JULY 30, 2009**

CONDUIT AND TRAY SCHEDULE
UNDERGROUND

E-198

REVISED BY | DATE REVISED
CARMELO RIVERA | ELLERY LUCAS
CALCULATED-DESIGNED BY | CHECKED BY
CONSULTANT FUNCTIONAL SUPERVISOR
BEHZAD GOLEMOHAMMADI

STATE OF CALIFORNIA - DEPARTMENT OF TRANSPORTATION
Caltrans

LAST REVISION 00-00-00 | DATE PLOTTED => 28-JUL-2009 | TIME PLOTTED => 06:31

Dist	COUNTY	ROUTE	KILOMETER POST TOTAL PROJECT	SHEET No.	TOTAL SHEETS
04	SF	80	12.7/13.2	318	806

Caltrans Metric

2/14/08
REGISTERED ELECTRICAL ENGINEER

6-23-08
PLANS APPROVAL DATE

REGISTERED PROFESSIONAL ENGINEER FADI WALIEDDINE No. 11465 Exp. 12/31/09 ELECTRICAL STATE OF CALIFORNIA

THE STATE OF CALIFORNIA OR ITS OFFICERS OR AGENTS SHALL NOT BE RESPONSIBLE FOR THE ACCURACY OR COMPLETENESS OF ELECTRONIC COPIES OF THIS PLAN SHEET.

PB AMERICAS, Inc.
A Parsons Brinckerhoff Company
303 Second St., Suite 700N
San Francisco, CA 94107-1317

5

Conduit/Tray No:	0124	Reference:	E-30, E15, E-31
Size:	103	Type:	RGS conduit
From:	(E) 600 V Pull Box	To:	(E) Manhole-5
Total Fill (mm2):	2065.40	Remarks:	Existing conduit, add new cable (s) and pull rope thru the entire length of the connected conduits as listed below.
Allowable Fill (mm2):	3324.51		

Description of Changes:

Included Cable No.	Conductor Type	Area (mm2)
A-1005-1	1-3/C + Gnd, #8, 600 V, EPR insulation	262.68
A-1006-1	1-3/C + Gnd, #8, 600 V, EPR insulation	262.68
A-1007-1	1-3/C + Gnd, #4, 600 V, EPR insulation	366.10
A-1008-1	1-3/C + Gnd, #6, 600 V, EPR insulation	324.29
A-1009-1	1-3/C + Gnd, #6, 600 V, EPR insulation	324.29
Pull Rope	Soft-Fiber Polyester	0.00
S-2021-1	1-3/C + Gnd, #8, 600 V, EPR insulation	262.68
S-2022-1	1-3/C + Gnd, #8, 600 V, EPR insulation	262.68

Conduit/Tray No:	0125	Reference:	E-30, E15, E-31
Size:	103	Type:	RGS conduit
From:	(E) 600 V Pull Box	To:	(E) Manhole-5
Total Fill (mm2):	1375.01	Remarks:	Existing conduit, add new cable (s) and pull rope thru the entire length of the connected conduits as listed below.
Allowable Fill (mm2):	3324.51		

Description of Changes:

Included Cable No.	Conductor Type	Area (mm2)
Pull Rope	Soft-Fiber Polyester	0.00
S-1001-1	1-3/C + Gnd, #8, 600 V, EPR insulation	262.68
S-1002-1	1-3/C + Gnd, #8, 600 V, EPR insulation	262.68
S-1021-1	1-3/C + Gnd, #8, 600 V, EPR insulation	262.68
S-1022-1	1-3/C + Gnd, #8, 600 V, EPR insulation	262.68
S-1023-1	1-3/C + Gnd, #6, 600 V, EPR insulation	324.29

Conduit/Tray No:	0126	Reference:	E-30, E15, E-31
Size:	103	Type:	RGS conduit
From:	(E) 600 V Pull Box	To:	(E) Manhole-5
Total Fill (mm2):	2232.25	Remarks:	Existing conduit, add new cable (s) and pull rope thru the entire length of the connected conduits as listed below.
Allowable Fill (mm2):	3324.51		

Description of Changes:

Included Cable No.	Conductor Type	Area (mm2)
1091	1-3/C + Gnd, #6, 600 V, EPR insulation	324.29
1092	1-3/C + Gnd, #4, 600 V, EPR insulation	366.10
1093	1-3/C + Gnd, #4, 600 V, EPR insulation	366.10
1094	1-3/C + Gnd, #2, 600 V, EPR insulation	527.18
1105	1-3/C + Gnd, #6, 600 V, EPR insulation	324.29
Pull Rope	Soft-Fiber Polyester	0.00
S-1024-1	1-3/C + Gnd, #6, 600 V, EPR insulation	324.29

Conduit/Tray No:	0132	Reference:	E-30, E15, E-31
Size:	103	Type:	RGS conduit
From:	(E) 480 V LVCC-A	To:	(E) Manhole-5
Total Fill (mm2):	2519.96	Remarks:	Existing conduit, add new cable (s) and pull rope thru the entire length of the connected conduits as listed below.
Allowable Fill (mm2):	3324.51		

Description of Changes:

Included Cable No.	Conductor Type	Area (mm2)
1115	1-3/C + Gnd, #1/0, 600 V, EPR insulation	754.18
1117	1-3/C + Gnd, #2/0, 600 V, EPR insulation	882.89
1118	1-3/C + Gnd, #2/0, 600 V, EPR insulation	882.89
Pull Rope	Soft-Fiber Polyester	0.00

Conduit/Tray No:	0133	Reference:	E-30, E15, E-31
Size:	103	Type:	RGS conduit
From:	(E) 480 V LVCC-B	To:	(E) Manhole-5
Total Fill (mm2):	1277.47	Remarks:	Existing conduit, add new cable (s) and pull rope thru the entire length of the connected conduits as listed below.
Allowable Fill (mm2):	3324.51		

Description of Changes:

Included Cable No.	Conductor Type	Area (mm2)
2119-A	3 + 1 Gnd, 250 kcmil, #1/0, 600 V, RHH/RHW insulation	1277.47
Pull Rope	Soft-Fiber Polyester	0.00

Conduit/Tray No:	0134	Reference:	E-30, E15, E-31
Size:	103	Type:	RGS conduit
From:	(E) 480 V LVCC-B	To:	(E) Manhole-5
Total Fill (mm2):	1277.47	Remarks:	Existing conduit, add new cable (s) and pull rope thru the entire length of the connected conduits as listed below.
Allowable Fill (mm2):	3324.51		

Description of Changes:

Included Cable No.	Conductor Type	Area (mm2)
2119-B	3 + 1 Gnd, 250 kcmil, #1/0, 600 V, RHH/RHW insulation	1277.47
Pull Rope	Soft-Fiber Polyester	0.00

CONDUIT AND TRAY SCHEDULE
UNDERGROUND

5 REVISED PER ADDENDUM No. 5 DATED JULY 30, 2009

E-199

REVISED BY | DATE REVISED
CARMELO RIVERA | ELLERY LUCAS
CALCULATED-DESIGNED BY | CHECKED BY
CONSULTANT FUNCTIONAL SUPERVISOR
BEHZAD GOLEMOHAMMADI
STATE OF CALIFORNIA - DEPARTMENT OF TRANSPORTATION
Caltrans

LAST REVISION 00-00-00 | DATE PLOTTED => 28-JUL-2009 | TIME PLOTTED => 06:31

Dist	COUNTY	ROUTE	KILOMETER POST TOTAL PROJECT	SHEET No.	TOTAL SHEETS
04	SF	80	12.7/13.2	319	806

Caltrans Metric

2/14/08
REGISTERED ELECTRICAL ENGINEER

6-23-08
PLANS APPROVAL DATE

REGISTERED PROFESSIONAL ENGINEER
FADI WALIEDDINE
No. 11465
Exp. 12/31/09
ELECTRICAL
STATE OF CALIFORNIA

THE STATE OF CALIFORNIA OR ITS OFFICERS OR AGENTS SHALL NOT BE RESPONSIBLE FOR THE ACCURACY OR COMPLETENESS OF ELECTRONIC COPIES OF THIS PLAN SHEET.

PB AMERICAS, Inc.
A Parsons Brinckerhoff Company
303 Second St., Suite 700N
San Francisco, CA 94107-1317

Conduit/Tray No:	0135
Reference:	E-30, E15, E-31
Size:	103
Type:	RGS conduit
From:	(E) 480 V LVCC-B
To:	(E) Manhole-5
Total Fill (mm2):	2262.54
Allowable Fill (mm2):	3324.51
Remarks:	Existing conduit, add new cable (s) and pull rope thru the entire length of the connected conduits as listed below.
Description of Changes:	

Included Cable No.	Conductor Type	Area (mm2)
2120	1-3/C + Gnd, #1/0, 600 V, EPR insulation	754.18
2121	1-3/C + Gnd, #1/0, 600 V, EPR insulation	754.18
2123	1-3/C + Gnd, #1/0, 600 V, EPR insulation	754.18
Pull Rope	Soft-Fiber Polyester	0.00

Conduit/Tray No:	0136
Reference:	E-30, E15, E-31
Size:	103
Type:	RGS conduit
From:	(E) 480 V LVCC-B
To:	(E) Manhole-5
Total Fill (mm2):	1277.47
Allowable Fill (mm2):	3324.51
Remarks:	Existing conduit, add new cable (s) and pull rope thru the entire length of the connected conduits as listed below.
Description of Changes:	

Included Cable No.	Conductor Type	Area (mm2)
2125	3 + 1 Gnd, 250 kcmil, #1/0, 600 V, RHH/RHW insulation	1277.47
Pull Rope	Soft-Fiber Polyester	0.00

Conduit/Tray No:	0150
Reference:	E-32, E-16, E-15
Size:	103
Type:	RGS conduit
From:	(E) Manhole-5
To:	Manhole-7
Total Fill (mm2):	2536.74
Allowable Fill (mm2):	3324.51
Remarks:	
Description of Changes:	

Included Cable No.	Conductor Type	Area (mm2)
2091	1-3/C + Gnd, #4, 600 V, EPR insulation	366.10
2092	1-3/C + Gnd, #4, 600 V, EPR insulation	366.10
2093	1-3/C + Gnd, #4, 600 V, EPR insulation	366.10
2094	1-3/C + Gnd, #2, 600 V, EPR insulation	527.18
A-2005-1	1-3/C + Gnd, #8, 600 V, EPR insulation	262.68
A-2007-1	1-3/C + Gnd, #6, 600 V, EPR insulation	324.29
A-2009-1	1-3/C + Gnd, #6, 600 V, EPR insulation	324.29
Pull Rope	Soft-Fiber Polyester	0.00

Conduit/Tray No:	0151
Reference:	E-32, E-16, E-15
Size:	103
Type:	RGS conduit
From:	(E) Manhole-5
To:	Manhole-7
Total Fill (mm2):	1464.40
Allowable Fill (mm2):	3324.51
Remarks:	
Description of Changes:	

Included Cable No.	Conductor Type	Area (mm2)
2100	1-3/C + Gnd, #4, 600 V, EPR insulation	366.10
2101	1-3/C + Gnd, #4, 600 V, EPR insulation	366.10
2102	1-3/C + Gnd, #4, 600 V, EPR insulation	366.10
A-2008-1	1-3/C + Gnd, #4, 600 V, EPR insulation	366.10
Pull Rope	Soft-Fiber Polyester	0.00

5 REVISED PER ADDENDUM No. 5 DATED JULY 30, 2009

5

Conduit/Tray No:	0152
Reference:	E-32, E-16, E-15
Size:	103
Type:	RGS conduit
From:	(E) Manhole-5
To:	Manhole-7
Total Fill (mm2):	1297.16
Allowable Fill (mm2):	3324.51
Remarks:	
Description of Changes:	

Included Cable No.	Conductor Type	Area (mm2)
Pull Rope	Soft-Fiber Polyester	0.00
S-2023-1	1-3/C + Gnd, #6, 600 V, EPR insulation	324.29
S-2024-1	1-3/C + Gnd, #6, 600 V, EPR insulation	324.29
S-2041-1	1-3/C + Gnd, #6, 600 V, EPR insulation	324.29
S-2042-1	1-3/C + Gnd, #6, 600 V, EPR insulation	324.29

Conduit/Tray No:	0153
Reference:	E-32, E-16, E-15
Size:	103
Type:	RGS conduit
From:	(E) Manhole-5
To:	Manhole-7
Total Fill (mm2):	2518.76
Allowable Fill (mm2):	3324.51
Remarks:	
Description of Changes:	

Included Cable No.	Conductor Type	Area (mm2)
A-3001-1	1-3/C + Gnd, #4, 600 V, EPR insulation	366.10
A-3002-1	1-3/C + Gnd, #4, 600 V, EPR insulation	366.10
A-3003-1	1-3/C + Gnd, #4, 600 V, EPR insulation	366.10
A-3004-1	1-3/C + Gnd, #2, 600 V, EPR insulation	527.18
A-3005-1	1-3/C + Gnd, #2, 600 V, EPR insulation	527.18
A-3006-1	1-3/C + Gnd, #4, 600 V, EPR insulation	366.10
Pull Rope	Soft-Fiber Polyester	0.00

CONDUIT AND TRAY SCHEDULE
UNDERGROUND

E-200

REVISED BY | DATE REVISED
CARMELO RIVERA | ELLERY LUCAS
CALCULATED-DESIGNED BY | CHECKED BY
CONSULTANT FUNCTIONAL SUPERVISOR
BEHZAD GOLEMOHAMMADI
STATE OF CALIFORNIA - DEPARTMENT OF TRANSPORTATION
Caltrans

LAST REVISION 00-00-00 | DATE PLOTTED => 28-JUL-2009 | TIME PLOTTED => 06:31

Dist	COUNTY	ROUTE	KILOMETER POST TOTAL PROJECT	SHEET No.	TOTAL SHEETS
04	SF	80	12.7/13.2	320	806

Caltrans Metric

2/14/08
REGISTERED ELECTRICAL ENGINEER

6-23-08
PLANS APPROVAL DATE

REGISTERED PROFESSIONAL ENGINEER FADI WALIEDDINE No. 11465 Exp. 12/31/09 ELECTRICAL STATE OF CALIFORNIA

THE STATE OF CALIFORNIA OR ITS OFFICERS OR AGENTS SHALL NOT BE RESPONSIBLE FOR THE ACCURACY OR COMPLETENESS OF ELECTRONIC COPIES OF THIS PLAN SHEET.

PB AMERICAS, Inc.
A Parsons Brinckerhoff Company
303 Second St., Suite 700N
San Francisco, CA 94107-1317

Conduit/Tray No: 0154 | Reference: E-32, E-16, E-15
Size: 103 | Type: RGS conduit
From: (E) Manhole-5 | To: Manhole-7
Total Fill (mm2): 2635.90 | Remarks:
Allowable Fill (mm2): 3324.51
Description of Changes:

Included Cable No.	Conductor Type	Area (mm2)
1095	1-3/C + Gnd, #2, 600 V, EPR insulation	527.18
1096	1-3/C + Gnd, #2, 600 V, EPR insulation	527.18
1097	1-3/C + Gnd, #2, 600 V, EPR insulation	527.18
1098	1-3/C + Gnd, #2, 600 V, EPR insulation	527.18
1099	1-3/C + Gnd, #2, 600 V, EPR insulation	527.18
Pull Rope	Soft-Fiber Polyester	0.00

5

Conduit/Tray No: 0155 | Reference: E-32, E-16, E-15
Size: 103 | Type: RGS conduit
From: (E) Manhole-5 | To: Manhole-7
Total Fill (mm2): 2380.12 | Remarks:
Allowable Fill (mm2): 3324.51
Description of Changes:

Included Cable No.	Conductor Type	Area (mm2)
A-3008-1	1-2/C + Gnd, #8, 600 V, EPR insulation	227.46
A-3009-1	1-3/C + Gnd, #2, 600 V, EPR insulation	527.18
A-3010-1	1-3/C + Gnd, #2, 600 V, EPR insulation	527.18
Pull Rope	Soft-Fiber Polyester	0.00
S-3021-1	1-3/C + Gnd, #4, 600 V, EPR insulation	366.10
S-3022-1	1-3/C + Gnd, #4, 600 V, EPR insulation	366.10
S-3023-1	1-3/C + Gnd, #4, 600 V, EPR insulation	366.10

Conduit/Tray No: 0156 | Reference: E-32, E-16, E-15
Size: 103 | Type: RGS conduit
From: (E) Manhole-5 | To: Manhole-7
Total Fill (mm2): 1277.47 | Remarks:
Allowable Fill (mm2): 3324.51
Description of Changes:

Included Cable No.	Conductor Type	Area (mm2)
2125	3 + 1 Gnd, 250 kcmil, #1/0, 600 V, RHH/RHW insulation	1277.47
Pull Rope	Soft-Fiber Polyester	0.00

Conduit/Tray No: 0157 | Reference: E-32, E-16, E-15
Size: 103 | Type: RGS conduit
From: (E) Manhole-5 | To: Manhole-7
Total Fill (mm2): 754.18 | Remarks:
Allowable Fill (mm2): 3324.51
Description of Changes:

Included Cable No.	Conductor Type	Area (mm2)
2123	1-3/C + Gnd, #1/0, 600 V, EPR insulation	754.18
Pull Rope	Soft-Fiber Polyester	0.00

Conduit/Tray No: 0158 | Reference: E-32, E-16, E-15
Size: 103 | Type: RGS conduit
From: (E) Manhole-5 | To: Manhole-7
Total Fill (mm2): 2554.41 | Remarks:
Allowable Fill (mm2): 3324.51
Description of Changes:

Included Cable No.	Conductor Type	Area (mm2)
1106	1-3/C + Gnd, #6, 600 V, EPR insulation	324.29
A-1035-1	1-3/C + Gnd, #6, 600 V, EPR insulation	324.29
A-3011-1	1-3/C + Gnd, #2, 600 V, EPR insulation	527.18
A-3012-1	1-3/C + Gnd, #2, 600 V, EPR insulation	527.18
A-3013-1	1-3/C + Gnd, #2, 600 V, EPR insulation	527.18
Pull Rope	Soft-Fiber Polyester	0.00
S-3056-1	1-3/C + Gnd, #6, 600 V, EPR insulation	324.29

Conduit/Tray No: 0159 | Reference: E-32, E-16, E-15
Size: 103 | Type: RGS conduit
From: (E) Manhole-5 | To: Manhole-7
Total Fill (mm2): 0.00 | Remarks:
Allowable Fill (mm2): 3324.51
Description of Changes:

Included Cable No.	Conductor Type	Area (mm2)
Pull Rope	Soft-Fiber Polyester	0.00

Conduit/Tray No: 0160 | Reference: E-32, E-16, E-15
Size: 103 | Type: RGS conduit
From: (E) Manhole-5 | To: Manhole-7
Total Fill (mm2): 0.00 | Remarks:
Allowable Fill (mm2): 3324.51
Description of Changes:

Included Cable No.	Conductor Type	Area (mm2)
Pull Rope	Soft-Fiber Polyester	0.00

5 **REVISED PER ADDENDUM No. 5 DATED JULY 30, 2009**

CONDUIT AND TRAY SCHEDULE
UNDERGROUND

E-201

STATE OF CALIFORNIA - DEPARTMENT OF TRANSPORTATION
Caltrans

CONSULTANT FUNCTIONAL SUPERVISOR: BEHZAD GOLEMOHAMMADI
CALCULATED-DESIGNED BY: CARMELO RIVERA
CHECKED BY: ELLERY LUCAS
REVISED BY | DATE REVISED

LAST REVISION 00-00-00 | DATE PLOTTED => 28-JUL-2009 | TIME PLOTTED => 06:32

Dist	COUNTY	ROUTE	KILOMETER POST TOTAL PROJECT	SHEET No.	TOTAL SHEETS
04	SF	80	12.7/13.2	322	806

Caltrans Metric

REGISTERED ELECTRICAL ENGINEER 2/14/08

6-23-08
PLANS APPROVAL DATE

REGISTERED PROFESSIONAL ENGINEER FADI WALIEDDINE No. 11465 Exp. 12/31/09 ELECTRICAL STATE OF CALIFORNIA

THE STATE OF CALIFORNIA OR ITS OFFICERS OR AGENTS SHALL NOT BE RESPONSIBLE FOR THE ACCURACY OR COMPLETENESS OF ELECTRONIC COPIES OF THIS PLAN SHEET.

PB AMERICAS, Inc.
A Parsons Brinckerhoff Company
303 Second St., Suite 700N
San Francisco, CA 94107-1317

Conduit/Tray No: 0168 | Reference: E-32, E-16, E-15
Size: 103 | Type: RGS conduit
From: (E) Manhole-5 | To: Manhole-7
Total Fill (mm2): 2328.08 | Remarks:
Allowable Fill (mm2): 3324.51
Description of Changes:

Included Cable No.	Conductor Type	Area (mm2)
A-1005-1	1-3/C + Gnd, #8, 600 V, EPR insulation	262.68
A-1006-1	1-3/C + Gnd, #8, 600 V, EPR insulation	262.68
A-1007-1	1-3/C + Gnd, #4, 600 V, EPR insulation	366.10
A-1008-1	1-3/C + Gnd, #6, 600 V, EPR insulation	324.29
A-1009-1	1-3/C + Gnd, #6, 600 V, EPR insulation	324.29
Pull Rope	Soft-Fiber Polyester	0.00
S-1001-1	1-3/C + Gnd, #8, 600 V, EPR insulation	262.68
S-2021-1	1-3/C + Gnd, #8, 600 V, EPR insulation	262.68
S-2022-1	1-3/C + Gnd, #8, 600 V, EPR insulation	262.68

~~Conduit/Tray No: 0169 | Reference: E-32, E-16, E-15~~
~~Size: 103 | Type: RGS conduit~~
~~From: (E) Manhole-5 | To: Manhole-7~~
~~Total Fill (mm2): 1436.62 | Remarks:~~
~~Allowable Fill (mm2): 3324.51~~
~~Description of Changes:~~

Included Cable No.	Conductor Type	Area (mm2)
Pull Rope	Soft-Fiber Polyester	0.00
S-1002-1	1-3/C + Gnd, #8, 600 V, EPR insulation	262.68
S-1021-1	1-3/C + Gnd, #8, 600 V, EPR insulation	262.68
S-1022-1	1-3/C + Gnd, #8, 600 V, EPR insulation	262.68
S-1023-1	1-3/C + Gnd, #6, 600 V, EPR insulation	324.29
S-1024-1	1-3/C + Gnd, #6, 600 V, EPR insulation	324.29

Conduit/Tray No: 0170 | Reference: E-32, E-16, E-15
Size: 103 | Type: RGS conduit
From: (E) Manhole-5 | To: Manhole-7
Total Fill (mm2): 1907.96 | Remarks:
Allowable Fill (mm2): 3324.51
Description of Changes:

Included Cable No.	Conductor Type	Area (mm2)
1091	1-3/C + Gnd, #6, 600 V, EPR insulation	324.29
1092	1-3/C + Gnd, #4, 600 V, EPR insulation	366.10
1093	1-3/C + Gnd, #4, 600 V, EPR insulation	366.10
1094	1-3/C + Gnd, #2, 600 V, EPR insulation	527.18
1105	1-3/C + Gnd, #6, 600 V, EPR insulation	324.29
Pull Rope	Soft-Fiber Polyester	0.00

Conduit/Tray No: 0171 | Reference: E-32, E-16, E-15
Size: 103 | Type: RGS conduit
From: (E) Manhole-5 | To: Manhole-7
Total Fill (mm2): 0.00 | Remarks:
Allowable Fill (mm2): 3324.51
Description of Changes:

Included Cable No.	Conductor Type	Area (mm2)
Pull Rope	Soft-Fiber Polyester	0.00

5

Conduit/Tray No: 0172 | Reference: E-32, E-16, E-15
Size: 103 | Type: RGS conduit
From: (E) Manhole-5 | To: Manhole-7
Total Fill (mm2): 0.00 | Remarks:
Allowable Fill (mm2): 3324.51
Description of Changes:

Included Cable No.	Conductor Type	Area (mm2)
Pull Rope	Soft-Fiber Polyester	0.00

Conduit/Tray No: 0173 | Reference: E-32, E-16, E-15
Size: 103 | Type: RGS conduit
From: (E) Manhole-5 | To: Manhole-7
Total Fill (mm2): 0.00 | Remarks:
Allowable Fill (mm2): 3324.51
Description of Changes:

Included Cable No.	Conductor Type	Area (mm2)
Pull Rope	Soft-Fiber Polyester	0.00

Conduit/Tray No: 0174 | Reference: E-32, E-16, E-15
Size: 103 | Type: RGS conduit
From: (E) Manhole-5 | To: Manhole-7
Total Fill (mm2): 754.18 | Remarks:
Allowable Fill (mm2): 4404.97
Description of Changes:

Included Cable No.	Conductor Type	Area (mm2)
2120	1-3/C + Gnd, #1/0, 600 V, EPR insulation	754.18
Pull Rope	Soft-Fiber Polyester	0.00

5 **REVISED PER ADDENDUM No. 5 DATED JULY 30, 2009**

CONDUIT AND TRAY SCHEDULE
UNDERGROUND

E-203

STATE OF CALIFORNIA - DEPARTMENT OF TRANSPORTATION
Caltrans

CONSULTANT FUNCTIONAL SUPERVISOR: BEHZAD GOLEMOHAMMADI
CALCULATED-DESIGNED BY: ELLERY LUCAS
CHECKED BY: CARMELO RIVERA
REVISED BY | DATE REVISED

LAST REVISION 00-00-00
DATE PLOTTED => 28-JUL-2009
TIME PLOTTED => 06:32

Dist	COUNTY	ROUTE	KILOMETER POST TOTAL PROJECT	SHEET No.	TOTAL SHEETS
04	SF	80	12.7/13.2	324	806

Caltrans Metric

2/14/08
REGISTERED ELECTRICAL ENGINEER

6-23-08
PLANS APPROVAL DATE

REGISTERED PROFESSIONAL ENGINEER
FADI WALIEDDINE
No. 11465
Exp. 12/31/09
ELECTRICAL
STATE OF CALIFORNIA

THE STATE OF CALIFORNIA OR ITS OFFICERS OR AGENTS SHALL NOT BE RESPONSIBLE FOR THE ACCURACY OR COMPLETENESS OF ELECTRONIC COPIES OF THIS PLAN SHEET.

PB AMERICAS, Inc.
A Parsons Brinckerhoff Company
303 Second St., Suite 700N
San Francisco, CA 94107-1317

Conduit/Tray No:	0186
Reference:	E-32, E-29, E-14
Size:	103
Type:	RGS conduit
From:	(E) Manhole-4
To:	Manhole-9
Total Fill (mm2):	0.00
Remarks:	
Allowable Fill (mm2):	3324.51
Description of Changes:	

Included Cable No.	Conductor Type	Area (mm2)
Pull Rope	Soft-Fiber Polyester	0.00

Conduit/Tray No:	0187
Reference:	E-32, E-29, E-14
Size:	103
Type:	RGS conduit
From:	(E) Manhole-4
To:	Manhole-9
Total Fill (mm2):	1201.71
Remarks:	
Allowable Fill (mm2):	4404.97
Description of Changes:	

Included Cable No.	Conductor Type	Area (mm2)
1473-4	50 pair #18, shielded pairs, IS/OS shield 600 V, XLPE insul., PVC jacket	1201.71
Pull Rope	Soft-Fiber Polyester	0.00

Conduit/Tray No:	0190
Reference:	E-32, E-14, E-33, E-18
Size:	103
Type:	RGS conduit
From:	(E) Manhole-6
To:	Manhole-11
Total Fill (mm2):	2780.99
Remarks:	
Allowable Fill (mm2):	3324.51
Description of Changes:	

Included Cable No.	Conductor Type	Area (mm2)
1391	3-1/C #4/0, 15 KV, EPR insulation	2780.99
Pull Rope	Soft-Fiber Polyester	0.00

Conduit/Tray No:	0191
Reference:	E-32, E-14, E-33, E-18
Size:	103
Type:	RGS conduit
From:	(E) Manhole-6
To:	Manhole-11
Total Fill (mm2):	0.00
Remarks:	
Allowable Fill (mm2):	3324.51
Description of Changes:	

Included Cable No.	Conductor Type	Area (mm2)
Pull Rope	Soft-Fiber Polyester	0.00

Conduit/Tray No:	0192
Reference:	E-32, E-14, E-33, E-18
Size:	103
Type:	RGS conduit
From:	(E) Manhole-6
To:	Manhole-11
Total Fill (mm2):	2780.99
Remarks:	
Allowable Fill (mm2):	3324.51
Description of Changes:	

Included Cable No.	Conductor Type	Area (mm2)
2391	3-1/C #4/0, 15 KV, EPR insulation	2780.99
Pull Rope	Soft-Fiber Polyester	0.00

Conduit/Tray No:	0193
Reference:	E-32, E-14, E-33, E-18
Size:	103
Type:	RGS conduit
From:	(E) Manhole-6
To:	Manhole-11
Total Fill (mm2):	0.00
Remarks:	
Allowable Fill (mm2):	3324.51
Description of Changes:	

Included Cable No.	Conductor Type	Area (mm2)
Pull Rope	Soft-Fiber Polyester	0.00

5

Conduit/Tray No:	0200
Reference:	E-32, E-28, E-16
Size:	103
Type:	RGS conduit
From:	Manhole-7
To:	Manhole-29
Total Fill (mm2):	3268.94
Remarks:	
Allowable Fill (mm2):	3324.51
Description of Changes:	

Included Cable No.	Conductor Type	Area (mm2)
2091	1-3/C + Gnd, #4, 600 V, EPR insulation	366.10
2092	1-3/C + Gnd, #4, 600 V, EPR insulation	366.10
2093	1-3/C + Gnd, #4, 600 V, EPR insulation	366.10
2094	1-3/C + Gnd, #2, 600 V, EPR insulation	527.18
2100	1-3/C + Gnd, #4, 600 V, EPR insulation	366.10
2101	1-3/C + Gnd, #4, 600 V, EPR insulation	366.10
A-2005-1	1-3/C + Gnd, #8, 600 V, EPR insulation	262.68
A-2007-1	1-3/C + Gnd, #6, 600 V, EPR insulation	324.29
A-2009-1	1-3/C + Gnd, #6, 600 V, EPR insulation	324.29
Pull Rope	Soft-Fiber Polyester	0.00

5 **REVISED PER ADDENDUM No. 5 DATED JULY 30, 2009**

CONDUIT AND TRAY SCHEDULE
UNDERGROUND

E-205

REVISED BY | DATE REVISED
CARMELO RIVERA | ELLERY LUCAS
CALCULATED-DESIGNED BY | CHECKED BY
CONSULTANT FUNCTIONAL SUPERVISOR
BEHZAD GOLEMOHAMMADI
STATE OF CALIFORNIA - DEPARTMENT OF TRANSPORTATION
Caltrans

LAST REVISION 00-00-00 | DATE PLOTTED => 28-JUL-2009 | TIME PLOTTED => 06:32

Dist	COUNTY	ROUTE	KILOMETER POST TOTAL PROJECT	SHEET No.	TOTAL SHEETS
04	SF	80	12.7/13.2	325	806

Caltrans Metric

2/14/08
REGISTERED ELECTRICAL ENGINEER

6-23-08
PLANS APPROVAL DATE

REGISTERED PROFESSIONAL ENGINEER FADI WALIEDDINE No. 11465 Exp. 12/31/09 ELECTRICAL STATE OF CALIFORNIA

THE STATE OF CALIFORNIA OR ITS OFFICERS OR AGENTS SHALL NOT BE RESPONSIBLE FOR THE ACCURACY OR COMPLETENESS OF ELECTRONIC COPIES OF THIS PLAN SHEET.

PB AMERICAS, Inc.
A Parsons Brinckerhoff Company
303 Second St., Suite 700N
San Francisco, CA 94107-1317

~~Conduit/Tray No: 0201 | Reference: E-32, E-28, E-16~~
~~Size: 103 | Type: RGS conduit~~
~~From: Manhole-7 | To: Manhole-29~~
~~Total Fill (mm2): 1380.78 | Remarks:~~
~~Allowable Fill (mm2): 3324.51~~
~~Description of Changes:~~

Included Cable No.	Conductor Type	Area (mm2)
2102	1-3/C + Gnd, #4, 600 V, EPR insulation	366.10
A-2008-1	1-3/C + Gnd, #4, 600 V, EPR insulation	366.10
Pull Rope	Soft-Fiber Polyester	0.00
S-2023-1	1-3/C + Gnd, #6, 600 V, EPR insulation	324.29
S-2024-1	1-3/C + Gnd, #6, 600 V, EPR insulation	324.29

Conduit/Tray No: 0202 | Reference: E-32, E-28, E-16
Size: 103 | Type: RGS conduit
From: Manhole-7 | To: Manhole-29
Total Fill (mm2): 648.58 | Remarks:
Allowable Fill (mm2): 2576.49
Description of Changes:

Included Cable No.	Conductor Type	Area (mm2)
Pull Rope	Soft-Fiber Polyester	0.00
S-2041-1	1-3/C + Gnd, #6, 600 V, EPR insulation	324.29
S-2042-1	1-3/C + Gnd, #6, 600 V, EPR insulation	324.29

Conduit/Tray No: 0203 | Reference: E-32, E-16, E-17, E-33
Size: 103 | Type: RGS conduit
From: Manhole-7 | To: Manhole-10
Total Fill (mm2): 1277.47 | Remarks:
Allowable Fill (mm2): 3324.51
Description of Changes:

Included Cable No.	Conductor Type	Area (mm2)
2119-A	3 + 1 Gnd, 250 kcmil, #1/0, 600 V, RHH/RHW insulation	1277.47
Pull Rope	Soft-Fiber Polyester	0.00

Conduit/Tray No: 0204 | Reference: E-32, E-16, E-17, E-33
Size: 103 | Type: RGS conduit
From: Manhole-7 | To: Manhole-10
Total Fill (mm2): 2518.76 | Remarks:
Allowable Fill (mm2): 3324.51
Description of Changes:

Included Cable No.	Conductor Type	Area (mm2)
A-3001-1	1-3/C + Gnd, #4, 600 V, EPR insulation	366.10
A-3002-1	1-3/C + Gnd, #4, 600 V, EPR insulation	366.10
A-3003-1	1-3/C + Gnd, #4, 600 V, EPR insulation	366.10
A-3004-1	1-3/C + Gnd, #2, 600 V, EPR insulation	527.18
A-3005-1	1-3/C + Gnd, #2, 600 V, EPR insulation	527.18
A-3006-1	1-3/C + Gnd, #4, 600 V, EPR insulation	366.10
Pull Rope	Soft-Fiber Polyester	0.00

Conduit/Tray No: 0205 | Reference: E-32, E-16, E-17, E-33
Size: 103 | Type: RGS conduit
From: Manhole-7 | To: Manhole-10
Total Fill (mm2): 2635.90 | Remarks:
Allowable Fill (mm2): 3324.51
Description of Changes:

Included Cable No.	Conductor Type	Area (mm2)
1095	1-3/C + Gnd, #2, 600 V, EPR insulation	527.18
1096	1-3/C + Gnd, #2, 600 V, EPR insulation	527.18
1097	1-3/C + Gnd, #2, 600 V, EPR insulation	527.18
1098	1-3/C + Gnd, #2, 600 V, EPR insulation	527.18
1099	1-3/C + Gnd, #2, 600 V, EPR insulation	527.18
Pull Rope	Soft-Fiber Polyester	0.00

Conduit/Tray No: 0206 | Reference: E-32, E-16, E-17, E-33
Size: 103 | Type: RGS conduit
From: Manhole-7 | To: Manhole-10
Total Fill (mm2): 2519.96 | Remarks:
Allowable Fill (mm2): 3324.51
Description of Changes:

Included Cable No.	Conductor Type	Area (mm2)
1115	1-3/C + Gnd, #1/0, 600 V, EPR insulation	754.18
1117	1-3/C + Gnd, #2/0, 600 V, EPR insulation	882.89
1118	1-3/C + Gnd, #2/0, 600 V, EPR insulation	882.89
Pull Rope	Soft-Fiber Polyester	0.00

~~Conduit/Tray No: 0207 | Reference: E-32, E-16, E-17, E-33~~
~~Size: 103 | Type: RGS conduit~~
~~From: Manhole-7 | To: Manhole-10~~
~~Total Fill (mm2): 2380.12 | Remarks:~~
~~Allowable Fill (mm2): 3324.51~~
~~Description of Changes:~~

Included Cable No.	Conductor Type	Area (mm2)
A-3008-1	1-2/C + Gnd, #8, 600 V, EPR insulation	227.46
A-3009-1	1-3/C + Gnd, #2, 600 V, EPR insulation	527.18
A-3010-1	1-3/C + Gnd, #2, 600 V, EPR insulation	527.18
Pull Rope	Soft-Fiber Polyester	0.00
S-3021-1	1-3/C + Gnd, #4, 600 V, EPR insulation	366.10
S-3022-1	1-3/C + Gnd, #4, 600 V, EPR insulation	366.10
S-3023-1	1-3/C + Gnd, #4, 600 V, EPR insulation	366.10

5 REVISED PER ADDENDUM No. 5 DATED JULY 30, 2009

CONDUIT AND TRAY SCHEDULE
UNDERGROUND

E-206

REVISED BY | DATE REVISED
CARMELO RIVERA | ELLERY LUCAS
CALCULATED-DESIGNED BY | CHECKED BY
CONSULTANT FUNCTIONAL SUPERVISOR
BEHZAD GOLEMOHAMMADI
STATE OF CALIFORNIA - DEPARTMENT OF TRANSPORTATION
Caltrans

LAST REVISION 00-00-00 | DATE PLOTTED => 28-JUL-2009 | TIME PLOTTED => 06:32

Dist	COUNTY	ROUTE	KILOMETER POST TOTAL PROJECT	SHEET No.	TOTAL SHEETS
04	SF	80	12.7/13.2	327	806

Caltrans Metric

2/14/08
REGISTERED ELECTRICAL ENGINEER

6-23-08
PLANS APPROVAL DATE

REGISTERED PROFESSIONAL ENGINEER
FADI WALIEDDINE
No. 11465
Exp. 12/31/09
ELECTRICAL
STATE OF CALIFORNIA

THE STATE OF CALIFORNIA OR ITS OFFICERS OR AGENTS SHALL NOT BE RESPONSIBLE FOR THE ACCURACY OR COMPLETENESS OF ELECTRONIC COPIES OF THIS PLAN SHEET.

PB AMERICAS, Inc.
A Parsons Brinckerhoff Company
303 Second St., Suite 700N
San Francisco, CA 94107-1317

Conduit/Tray No:	0218
Reference:	E-32, E-16, E-17, E-33
Size:	103
Type:	RGS conduit
From:	Manhole-7
To:	Manhole-10
Total Fill (mm2):	0.00
Remarks:	
Allowable Fill (mm2):	3324.51
Description of Changes:	

Included Cable No.	Conductor Type	Area (mm2)
Pull Rope	Soft-Fiber Polyester	0.00

Conduit/Tray No:	0219
Reference:	E-32, E-16, E-17, E-33
Size:	103
Type:	RGS conduit
From:	Manhole-7
To:	Manhole-10
Total Fill (mm2):	0.00
Remarks:	
Allowable Fill (mm2):	3324.51
Description of Changes:	

Included Cable No.	Conductor Type	Area (mm2)
Pull Rope	Soft-Fiber Polyester	0.00

Conduit/Tray No:	0220
Reference:	E-32, E-16, E-17, E-33
Size:	103
Type:	RGS conduit
From:	Manhole-7
To:	Manhole-10
Total Fill (mm2):	0.00
Remarks:	
Allowable Fill (mm2):	3324.51
Description of Changes:	

Included Cable No.	Conductor Type	Area (mm2)
Pull Rope	Soft-Fiber Polyester	0.00

Conduit/Tray No:	0221
Reference:	E-32, E-16, E-17, E-33
Size:	103
Type:	RGS conduit
From:	Manhole-7
To:	Manhole-10
Total Fill (mm2):	1277.47
Remarks:	
Allowable Fill (mm2):	3324.51
Description of Changes:	

Included Cable No.	Conductor Type	Area (mm2)
2125	3 + 1 Gnd, 250 kcmil, #1/0, 600 V, RHH/RHW insulation	1277.47
Pull Rope	Soft-Fiber Polyester	0.00

Conduit/Tray No:	0222
Reference:	E-32, E-16, E-17, E-33
Size:	103
Type:	RGS conduit
From:	Manhole-7
To:	Manhole-10
Total Fill (mm2):	754.18
Remarks:	
Allowable Fill (mm2):	4404.97
Description of Changes:	

Included Cable No.	Conductor Type	Area (mm2)
2121	1-3/C + Gnd, #1/0, 600 V, EPR insulation	754.18
Pull Rope	Soft-Fiber Polyester	0.00

Conduit/Tray No:	0226
Reference:	E-32, E-28, E-16
Size:	103
Type:	RGS conduit
From:	Manhole-7
To:	Manhole-30
Total Fill (mm2):	2652.37
Remarks:	
Allowable Fill (mm2):	3324.51
Description of Changes:	

Included Cable No.	Conductor Type	Area (mm2)
A-1005-1	1-3/C + Gnd, #8, 600 V, EPR insulation	262.68
A-1006-1	1-3/C + Gnd, #8, 600 V, EPR insulation	262.68
A-1007-1	1-3/C + Gnd, #4, 600 V, EPR insulation	366.10
A-1008-1	1-3/C + Gnd, #6, 600 V, EPR insulation	324.29
A-1009-1	1-3/C + Gnd, #6, 600 V, EPR insulation	324.29
Pull Rope	Soft-Fiber Polyester	0.00
S-1001-1	1-3/C + Gnd, #8, 600 V, EPR insulation	262.68
S-1024-1	1-3/C + Gnd, #6, 600 V, EPR insulation	324.29
S-2021-1	1-3/C + Gnd, #8, 600 V, EPR insulation	262.68
S-2022-1	1-3/C + Gnd, #8, 600 V, EPR insulation	262.68

5

Conduit/Tray No:	0227
Reference:	E-32, E-28, E-16
Size:	103
Type:	RGS conduit
From:	Manhole-7
To:	Manhole-30
Total Fill (mm2):	525.36
Remarks:	
Allowable Fill (mm2):	2576.49
Description of Changes:	

Included Cable No.	Conductor Type	Area (mm2)
Pull Rope	Soft-Fiber Polyester	0.00
S-1002-1	1-3/C + Gnd, #8, 600 V, EPR insulation	262.68
S-1021-1	1-3/C + Gnd, #8, 600 V, EPR insulation	262.68

5 **REVISED PER ADDENDUM No. 5 DATED JULY 30, 2009**

CONDUIT AND TRAY SCHEDULE
UNDERGROUND

E-208

REVISED BY | DATE REVISED
CARMELO RIVERA | ELLERY LUCAS
CALCULATED-DESIGNED BY | CHECKED BY
CONSULTANT FUNCTIONAL SUPERVISOR
BEHZAD GOLEMOHAMMADI

STATE OF CALIFORNIA - DEPARTMENT OF TRANSPORTATION
Caltrans

LAST REVISION 00-00-00 | DATE PLOTTED => 28-JUL-2009 | TIME PLOTTED => 06:33

Dist	COUNTY	ROUTE	KILOMETER POST TOTAL PROJECT	SHEET No.	TOTAL SHEETS
04	SF	80	12.7/13.2	328	806

Caltrans Metric

2/14/08
REGISTERED ELECTRICAL ENGINEER

6-23-08
PLANS APPROVAL DATE

REGISTERED PROFESSIONAL ENGINEER
FADI WALIEDDINE
No. 11465
Exp. 12/31/09
ELECTRICAL
STATE OF CALIFORNIA

THE STATE OF CALIFORNIA OR ITS OFFICERS OR AGENTS SHALL NOT BE RESPONSIBLE FOR THE ACCURACY OR COMPLETENESS OF ELECTRONIC COPIES OF THIS PLAN SHEET.

PB AMERICAS, Inc.
A Parsons Brinckerhoff Company
303 Second St., Suite 700N
San Francisco, CA 94107-1317

Conduit/Tray No: 0228 | Reference: E-32, E-28, E-16
Size: 103 | Type: RGS conduit
From: Manhole-7 | To: Manhole-30
Total Fill (mm2): 2494.93 | Remarks:
Allowable Fill (mm2): 3324.51
Description of Changes:

Included Cable No.	Conductor Type	Area (mm2)
1091	1-3/C + Gnd, #6, 600 V, EPR insulation	324.29
1092	1-3/C + Gnd, #4, 600 V, EPR insulation	366.10
1093	1-3/C + Gnd, #4, 600 V, EPR insulation	366.10
1094	1-3/C + Gnd, #2, 600 V, EPR insulation	527.18
1105	1-3/C + Gnd, #6, 600 V, EPR insulation	324.29
Pull Rope	Soft-Fiber Polyester	0.00
S-1022-1	1-3/C + Gnd, #8, 600 V, EPR insulation	262.68
S-1023-1	1-3/C + Gnd, #6, 600 V, EPR insulation	324.29

Conduit/Tray No: 0229 | Reference: E-32, E-16, E-17, E-33
Size: 103 | Type: RGS conduit
From: Manhole-7 | To: Manhole-10
Total Fill (mm2): 2635.90 | Remarks:
Allowable Fill (mm2): 3324.51
Description of Changes:

Included Cable No.	Conductor Type	Area (mm2)
2103	1-3/C + Gnd, #2, 600 V, EPR insulation	527.18
2104	1-3/C + Gnd, #2, 600 V, EPR insulation	527.18
2105	1-3/C + Gnd, #2, 600 V, EPR insulation	527.18
2106	1-3/C + Gnd, #2, 600 V, EPR insulation	527.18
2107	1-3/C + Gnd, #2, 600 V, EPR insulation	527.18
Pull Rope	Soft-Fiber Polyester	0.00

Conduit/Tray No: 0230 | Reference: E-32, E-16, E-17, E-33
Size: 103 | Type: RGS conduit
From: Manhole-7 | To: Manhole-10
Total Fill (mm2): 2518.76 | Remarks:
Allowable Fill (mm2): 3324.51
Description of Changes:

Included Cable No.	Conductor Type	Area (mm2)
A-3031-1	1-3/C + Gnd, #4, 600 V, EPR insulation	366.10
A-3032-1	1-3/C + Gnd, #4, 600 V, EPR insulation	366.10
A-3033-1	1-3/C + Gnd, #2, 600 V, EPR insulation	527.18
A-3034-1	1-3/C + Gnd, #2, 600 V, EPR insulation	527.18
A-3035-1	1-3/C + Gnd, #4, 600 V, EPR insulation	366.10
A-3036-1	1-3/C + Gnd, #4, 600 V, EPR insulation	366.10
Pull Rope	Soft-Fiber Polyester	0.00

Conduit/Tray No: 0231 | Reference: E-32, E-16, E-17, E-33
Size: 103 | Type: RGS conduit
From: Manhole-7 | To: Manhole-10
Total Fill (mm2): 3163.08 | Remarks:
Allowable Fill (mm2): 3324.51
Description of Changes:

Included Cable No.	Conductor Type	Area (mm2)
A-3039-1	1-3/C + Gnd, #2, 600 V, EPR insulation	527.18
A-3040-1	1-3/C + Gnd, #2, 600 V, EPR insulation	527.18
A-3041-1	1-3/C + Gnd, #2, 600 V, EPR insulation	527.18
A-3042-1	1-3/C + Gnd, #2, 600 V, EPR insulation	527.18
A-3043-1	1-3/C + Gnd, #2, 600 V, EPR insulation	527.18
A-3057-1	1-3/C + Gnd, #2, 600 V, EPR insulation	527.18
Pull Rope	Soft-Fiber Polyester	0.00

~~Conduit/Tray No: 0232 | Reference: E-32, E-16, E-17, E-33~~
~~Size: 103 | Type: RGS conduit~~
~~From: Manhole-7 | To: Manhole-10~~
~~Total Fill (mm2): 2152.66 | Remarks:~~
~~Allowable Fill (mm2): 3324.51~~
~~Description of Changes:~~

Included Cable No.	Conductor Type	Area (mm2)
Pull Rope	Soft-Fiber Polyester	0.00
S-2031-1	1-3/C + Gnd, #2, 600 V, EPR insulation	527.18
S-2032-1	1-3/C + Gnd, #4, 600 V, EPR insulation	366.10
S-3051-1	1-3/C + Gnd, #4, 600 V, EPR insulation	366.10
S-3052-1	1-3/C + Gnd, #2, 600 V, EPR insulation	527.18
S-3053-1	1-3/C + Gnd, #4, 600 V, EPR insulation	366.10

5

5 **REVISED PER ADDENDUM No. 5 DATED JULY 30, 2009**

CONDUIT AND TRAY SCHEDULE
UNDERGROUND

E-209

REVISED BY | DATE REVISED
CARMELO RIVERA | ELLERY LUCAS
CALCULATED-DESIGNED BY | CHECKED BY
CONSULTANT FUNCTIONAL SUPERVISOR
BEHZAD GOLEMOHAMMADI
STATE OF CALIFORNIA - DEPARTMENT OF TRANSPORTATION
Caltrans

LAST REVISION 00-00-00 | DATE PLOTTED => 28-JUL-2009 | TIME PLOTTED => 06:33

Dist	COUNTY	ROUTE	KILOMETER POST TOTAL PROJECT	SHEET No.	TOTAL SHEETS
04	SF	80	12.7/13.2	332	806

Caltrans Metric

2/14/08
REGISTERED ELECTRICAL ENGINEER

6-23-08
PLANS APPROVAL DATE

REGISTERED PROFESSIONAL ENGINEER FADI WALIEDDINE No. 11465 Exp. 12/31/09 ELECTRICAL STATE OF CALIFORNIA

THE STATE OF CALIFORNIA OR ITS OFFICERS OR AGENTS SHALL NOT BE RESPONSIBLE FOR THE ACCURACY OR COMPLETENESS OF ELECTRONIC COPIES OF THIS PLAN SHEET.

PB AMERICAS, Inc.
A Parsons Brinckerhoff Company
303 Second St., Suite 700N
San Francisco, CA 94107-1317

~~Conduit/Tray No: 0304 | Reference: E-33, E-17, E-19~~
~~Size: 103 | Type: RGS conduit~~
~~From: Manhole-10 | To: Manhole-13~~
~~Total Fill (mm2): 2380.12 | Remarks:~~
~~Allowable Fill (mm2): 3324.51~~
~~Description of Changes:~~

Included Cable No.	Conductor Type	Area (mm2)
A-3008-1	1-2/C + Gnd, #8, 600 V, EPR insulation	227.46
A-3009-1	1-3/C + Gnd, #2, 600 V, EPR insulation	527.18
A-3010-1	1-3/C + Gnd, #2, 600 V, EPR insulation	527.18
Pull Rope	Soft-Fiber Polyester	0.00
S-3021-1	1-3/C + Gnd, #4, 600 V, EPR insulation	366.10
S-3022-1	1-3/C + Gnd, #4, 600 V, EPR insulation	366.10
S-3023-1	1-3/C + Gnd, #4, 600 V, EPR insulation	366.10

5

Conduit/Tray No: 0305 | Reference: E-33, E-17, E-19
Size: 103 | Type: RGS conduit
From: Manhole-10 | To: Manhole-13
Total Fill (mm2): 3002.00 | Remarks:
Allowable Fill (mm2): 3324.51
Description of Changes:

Included Cable No.	Conductor Type	Area (mm2)
A-1011-1	1-3/C + Gnd, #2, 600 V, EPR insulation	527.18
A-1012-1	1-3/C + Gnd, #2, 600 V, EPR insulation	527.18
A-1013-1	1-3/C + Gnd, #2, 600 V, EPR insulation	527.18
A-1014-1	1-3/C + Gnd, #2, 600 V, EPR insulation	527.18
Pull Rope	Soft-Fiber Polyester	0.00
S-1031-1	1-3/C + Gnd, #2, 600 V, EPR insulation	527.18
S-1032-1	1-3/C + Gnd, #4, 600 V, EPR insulation	366.10

Conduit/Tray No: 0306 | Reference: E-33, E-17, E-19
Size: 103 | Type: RGS conduit
From: Manhole-10 | To: Manhole-13
Total Fill (mm2): 2554.41 | Remarks:
Allowable Fill (mm2): 3324.51
Description of Changes:

Included Cable No.	Conductor Type	Area (mm2)
1106	1-3/C + Gnd, #6, 600 V, EPR insulation	324.29
A-1035-1	1-3/C + Gnd, #6, 600 V, EPR insulation	324.29
A-3011-1	1-3/C + Gnd, #2, 600 V, EPR insulation	527.18
A-3012-1	1-3/C + Gnd, #2, 600 V, EPR insulation	527.18
A-3013-1	1-3/C + Gnd, #2, 600 V, EPR insulation	527.18
Pull Rope	Soft-Fiber Polyester	0.00
S-3056-1	1-3/C + Gnd, #6, 600 V, EPR insulation	324.29

Conduit/Tray No: 0309 | Reference: E-33, E-18, E-19
Size: 103 | Type: RGS conduit
From: Manhole-11 | To: Manhole-14
Total Fill (mm2): 2780.99 | Remarks:
Allowable Fill (mm2): 3324.51
Description of Changes:

Included Cable No.	Conductor Type	Area (mm2)
1391	3-1/C #4/0, 15 KV, EPR insulation	2780.99
Pull Rope	Soft-Fiber Polyester	0.00

Conduit/Tray No: 0310 | Reference: E-33, E-18, E-20
Size: 103 | Type: RGS conduit
From: Manhole-12 | To: Manhole-15
Total Fill (mm2): 970.95 | Remarks:
Allowable Fill (mm2): 3324.51
Description of Changes:

Included Cable No.	Conductor Type	Area (mm2)
1475-3	72 Fiber, single mode fiber optic riser cable	323.65
1477-1	72 Fiber, single mode fiber optic riser cable	323.65
2475-4	72 Fiber, single mode fiber optic riser cable	323.65
Pull Rope	Soft-Fiber Polyester	0.00

Conduit/Tray No: 0311 | Reference: E-33, E-18, E-20
Size: 103 | Type: RGS conduit
From: Manhole-12 | To: Manhole-15
Total Fill (mm2): 0.00 | Remarks:
Allowable Fill (mm2): 3324.51
Description of Changes:

Included Cable No.	Conductor Type	Area (mm2)
Pull Rope	Soft-Fiber Polyester	0.00

Conduit/Tray No: 0312 | Reference: E-33, E-18, E-20
Size: 103 | Type: RGS conduit
From: Manhole-12 | To: Manhole-15
Total Fill (mm2): 1201.71 | Remarks:
Allowable Fill (mm2): 4404.97
Description of Changes:

Included Cable No.	Conductor Type	Area (mm2)
1474-4	50 pair #18, shielded pairs, IS/OS shield 600 V, XLPE insul., PVC jacket	1201.71
Pull Rope	Soft-Fiber Polyester	0.00

5 **REVISED PER ADDENDUM No. 5 DATED JULY 30, 2009**

CONDUIT AND TRAY SCHEDULE
UNDERGROUND

E-213

REVISED BY | DATE REVISED
CARMELO RIVERA | ELLERY LUCAS
CALCULATED-DESIGNED BY | CHECKED BY
CONSULTANT FUNCTIONAL SUPERVISOR
BEHZAD GOLEMOHAMMADI
STATE OF CALIFORNIA - DEPARTMENT OF TRANSPORTATION
Caltrans

LAST REVISION 00-00-00 | DATE PLOTTED => 28-JUL-2009 | TIME PLOTTED => 06:33

Dist	COUNTY	ROUTE	KILOMETER POST TOTAL PROJECT	SHEET No.	TOTAL SHEETS
04	SF	80	12.7/13.2	334	806

Caltrans Metric

2/14/08
REGISTERED ELECTRICAL ENGINEER

6-23-08
PLANS APPROVAL DATE

REGISTERED PROFESSIONAL ENGINEER
FADI WALIEDDINE
No. 11465
Exp. 12/31/09
ELECTRICAL
STATE OF CALIFORNIA

THE STATE OF CALIFORNIA OR ITS OFFICERS OR AGENTS SHALL NOT BE RESPONSIBLE FOR THE ACCURACY OR COMPLETENESS OF ELECTRONIC COPIES OF THIS PLAN SHEET.

PB AMERICAS, Inc.
A Parsons Brinckerhoff Company
303 Second St., Suite 700N
San Francisco, CA 94107-1317

Conduit/Tray No:	0323
Reference:	E-33, E-18, E-20
Size:	103
Type:	RGS conduit
From:	Manhole-12
To:	Manhole-15
Total Fill (mm2):	0.00
Remarks:	
Allowable Fill (mm2):	3324.51
Description of Changes:	

Included Cable No.	Conductor Type	Area (mm2)
Pull Rope	Soft-Fiber Polyester	0.00

Conduit/Tray No:	0324
Reference:	E-33, E-18, E-20
Size:	103
Type:	RGS conduit
From:	Manhole-12
To:	Manhole-15
Total Fill (mm2):	0.00
Remarks:	
Allowable Fill (mm2):	3324.51
Description of Changes:	

Included Cable No.	Conductor Type	Area (mm2)
Pull Rope	Soft-Fiber Polyester	0.00

Conduit/Tray No:	0325
Reference:	E-33, E-17, E-19
Size:	103
Type:	RGS conduit
From:	Manhole-10
To:	Manhole-13
Total Fill (mm2):	2635.90
Remarks:	
Allowable Fill (mm2):	3324.51
Description of Changes:	

Included Cable No.	Conductor Type	Area (mm2)
2103	1-3/C + Gnd, #2, 600 V, EPR insulation	527.18
2104	1-3/C + Gnd, #2, 600 V, EPR insulation	527.18
2105	1-3/C + Gnd, #2, 600 V, EPR insulation	527.18
2106	1-3/C + Gnd, #2, 600 V, EPR insulation	527.18
2107	1-3/C + Gnd, #2, 600 V, EPR insulation	527.18
Pull Rope	Soft-Fiber Polyester	0.00

Conduit/Tray No:	0326
Reference:	E-33, E-17, E-19
Size:	103
Type:	RGS conduit
From:	Manhole-10
To:	Manhole-13
Total Fill (mm2):	2518.76
Remarks:	
Allowable Fill (mm2):	3324.51
Description of Changes:	

Included Cable No.	Conductor Type	Area (mm2)
A-3031-1	1-3/C + Gnd, #4, 600 V, EPR insulation	366.10
A-3032-1	1-3/C + Gnd, #4, 600 V, EPR insulation	366.10
A-3033-1	1-3/C + Gnd, #2, 600 V, EPR insulation	527.18
A-3034-1	1-3/C + Gnd, #2, 600 V, EPR insulation	527.18
A-3035-1	1-3/C + Gnd, #4, 600 V, EPR insulation	366.10
A-3036-1	1-3/C + Gnd, #4, 600 V, EPR insulation	366.10
Pull Rope	Soft-Fiber Polyester	0.00

Conduit/Tray No:	0327
Reference:	E-33, E-17, E-19
Size:	103
Type:	RGS conduit
From:	Manhole-10
To:	Manhole-13
Total Fill (mm2):	3163.08
Remarks:	
Allowable Fill (mm2):	3324.51
Description of Changes:	

Included Cable No.	Conductor Type	Area (mm2)
A-3039-1	1-3/C + Gnd, #2, 600 V, EPR insulation	527.18
A-3040-1	1-3/C + Gnd, #2, 600 V, EPR insulation	527.18
A-3041-1	1-3/C + Gnd, #2, 600 V, EPR insulation	527.18
A-3042-1	1-3/C + Gnd, #2, 600 V, EPR insulation	527.18
A-3043-1	1-3/C + Gnd, #2, 600 V, EPR insulation	527.18
A-3057-1	1-3/C + Gnd, #2, 600 V, EPR insulation	527.18
Pull Rope	Soft-Fiber Polyester	0.00

Conduit/Tray No:	0328
Reference:	E-33, E-17, E-19
Size:	103
Type:	RGS conduit
From:	Manhole-10
To:	Manhole-13
Total Fill (mm2):	2152.66
Remarks:	
Allowable Fill (mm2):	3324.51
Description of Changes:	

Included Cable No.	Conductor Type	Area (mm2)
Pull Rope	Soft-Fiber Polyester	0.00
S-2031-1	1-3/C + Gnd, #2, 600 V, EPR insulation	527.18
S-2032-1	1-3/C + Gnd, #4, 600 V, EPR insulation	366.10
S-3051-1	1-3/C + Gnd, #4, 600 V, EPR insulation	366.10
S-3052-1	1-3/C + Gnd, #2, 600 V, EPR insulation	527.18
S-3053-1	1-3/C + Gnd, #4, 600 V, EPR insulation	366.10

5

5 REVISED PER ADDENDUM No. 5 DATED JULY 30, 2009

CONDUIT AND TRAY SCHEDULE
UNDERGROUND

E-215

STATE OF CALIFORNIA - DEPARTMENT OF TRANSPORTATION
Caltrans

CONSULTANT FUNCTIONAL SUPERVISOR: BEHZAD GOLEMOHAMMADI
CALCULATED-DESIGNED BY: CARMELO RIVERA
CHECKED BY: ELLERY LUCAS
REVISED BY / DATE REVISED

LAST REVISION 00-00-00
DATE PLOTTED => 28-JUL-2009
TIME PLOTTED => 06:33

Dist	COUNTY	ROUTE	KILOMETER POST TOTAL PROJECT	SHEET No.	TOTAL SHEETS
04	SF	80	12.7/13.2	336	806

Caltrans Metric

2/14/08
REGISTERED ELECTRICAL ENGINEER

6-23-08
PLANS APPROVAL DATE

REGISTERED PROFESSIONAL ENGINEER FADI WALIEDDINE No. 11465 Exp. 12/31/09 ELECTRICAL STATE OF CALIFORNIA

THE STATE OF CALIFORNIA OR ITS OFFICERS OR AGENTS SHALL NOT BE RESPONSIBLE FOR THE ACCURACY OR COMPLETENESS OF ELECTRONIC COPIES OF THIS PLAN SHEET.

PB AMERICAS, Inc.
A Parsons Brinckerhoff Company
303 Second St., Suite 700N
San Francisco, CA 94107-1317

Conduit/Tray No:	0350
Reference:	E-33, E-19, E-20
Size:	103
Type:	RGS conduit
From:	Manhole-13
To:	Sta 1 + 63
Total Fill (mm2):	1277.47
Allowable Fill (mm2):	3324.51
Remarks:	Connect new conduit to existing conduit. Add new cable (s) and pull rope thru the entire length of the connected conduits as listed below.
Description of Changes:	

Included Cable No.	Conductor Type	Area (mm2)
2119-A	3 + 1 Gnd, 250 kcmil, #1/0, 600 V, RHH/RHW insulation	1277.47
Pull Rope	Soft-Fiber Polyester	0.00

Conduit/Tray No:	0351
Reference:	E-33, E-19, E-20
Size:	103
Type:	RGS conduit
From:	Manhole-13
To:	Sta 1 + 63
Total Fill (mm2):	2518.76
Allowable Fill (mm2):	3324.51
Remarks:	Connect new conduit to existing conduit. Add new cable (s) and pull rope thru the entire length of the connected conduits as listed below.
Description of Changes:	

Included Cable No.	Conductor Type	Area (mm2)
A-3001-1	1-3/C + Gnd, #4, 600 V, EPR insulation	366.10
A-3002-1	1-3/C + Gnd, #4, 600 V, EPR insulation	366.10
A-3003-1	1-3/C + Gnd, #4, 600 V, EPR insulation	366.10
A-3004-1	1-3/C + Gnd, #2, 600 V, EPR insulation	527.18
A-3005-1	1-3/C + Gnd, #2, 600 V, EPR insulation	527.18
A-3006-1	1-3/C + Gnd, #4, 600 V, EPR insulation	366.10
Pull Rope	Soft-Fiber Polyester	0.00

Conduit/Tray No:	0352
Reference:	E-33, E-19, E-20
Size:	103
Type:	RGS conduit
From:	Manhole-13
To:	Sta 1 + 63
Total Fill (mm2):	2635.90
Allowable Fill (mm2):	3324.51
Remarks:	Connect new conduit to existing conduit. Add new cable (s) and pull rope thru the entire length of the connected conduits as listed below.
Description of Changes:	

Included Cable No.	Conductor Type	Area (mm2)
1095	1-3/C + Gnd, #2, 600 V, EPR insulation	527.18
1096	1-3/C + Gnd, #2, 600 V, EPR insulation	527.18
1097	1-3/C + Gnd, #2, 600 V, EPR insulation	527.18
1098	1-3/C + Gnd, #2, 600 V, EPR insulation	527.18
1099	1-3/C + Gnd, #2, 600 V, EPR insulation	527.18
Pull Rope	Soft-Fiber Polyester	0.00

Conduit/Tray No:	0353
Reference:	E-33, E-19, E-20
Size:	103
Type:	RGS conduit
From:	Manhole-13
To:	Sta 1 + 63
Total Fill (mm2):	2519.96
Allowable Fill (mm2):	3324.51
Remarks:	Connect new conduit to existing conduit. Add new cable (s) and pull rope thru the entire length of the connected conduits as listed below.
Description of Changes:	

Included Cable No.	Conductor Type	Area (mm2)
1115	1-3/C + Gnd, #1/0, 600 V, EPR insulation	754.18
1117	1-3/C + Gnd, #2/0, 600 V, EPR insulation	882.89
1118	1-3/C + Gnd, #2/0, 600 V, EPR insulation	882.89
Pull Rope	Soft-Fiber Polyester	0.00

Conduit/Tray No:	0354
Reference:	E-33, E-19, E-20
Size:	103
Type:	RGS conduit
From:	Manhole-13
To:	Sta 1 + 63
Total Fill (mm2):	2380.12
Allowable Fill (mm2):	3324.51
Remarks:	Connect new conduit to existing conduit. Add new cable (s) and pull rope thru the entire length of the connected conduits as listed below.
Description of Changes:	

Included Cable No.	Conductor Type	Area (mm2)
A-3008-1	1-2/C + Gnd, #8, 600 V, EPR insulation	227.46
A-3009-1	1-3/C + Gnd, #2, 600 V, EPR insulation	527.18
A-3010-1	1-3/C + Gnd, #2, 600 V, EPR insulation	527.18
Pull Rope	Soft-Fiber Polyester	0.00
S-3021-1	1-3/C + Gnd, #4, 600 V, EPR insulation	366.10
S-3022-1	1-3/C + Gnd, #4, 600 V, EPR insulation	366.10
S-3023-1	1-3/C + Gnd, #4, 600 V, EPR insulation	366.10

5

5 **REVISED PER ADDENDUM No. 5 DATED JULY 30, 2009**

CONDUIT AND TRAY SCHEDULE
UNDERGROUND

E-217

REVISED BY | DATE REVISED
CARMELO RIVERA | ELLERY LUCAS
CALCULATED-DESIGNED BY | CHECKED BY
CONSULTANT FUNCTIONAL SUPERVISOR
BEHZAD GOLEMOHAMMADI
STATE OF CALIFORNIA - DEPARTMENT OF TRANSPORTATION
Caltrans

LAST REVISION 00-00-00 | DATE PLOTTED => 28-JUL-2009 | TIME PLOTTED => 06:34

Dist	COUNTY	ROUTE	KILOMETER POST TOTAL PROJECT	SHEET No.	TOTAL SHEETS
04	SF	80	12.7/13.2	340	806

Caltrans Metric

2/14/08
REGISTERED ELECTRICAL ENGINEER

6-23-08
PLANS APPROVAL DATE

REGISTERED PROFESSIONAL ENGINEER
FADI WALIEDDINE
No. 11465
Exp. 12/31/09
ELECTRICAL
STATE OF CALIFORNIA

THE STATE OF CALIFORNIA OR ITS OFFICERS OR AGENTS SHALL NOT BE RESPONSIBLE FOR THE ACCURACY OR COMPLETENESS OF ELECTRONIC COPIES OF THIS PLAN SHEET.

PB AMERICAS, Inc.
A Parsons Brinckerhoff Company
303 Second St., Suite 700N
San Francisco, CA 94107-1317

Conduit/Tray No: 0376 | Reference: E-33, E-19
Size: 103 | Type: RGS conduit
From: Manhole-13 | To: Sta 1 + 63
Total Fill (mm2): 2518.76 | Remarks: Connect new conduit to existing conduit. Add new cable (s) and pull rope thru the entire length of the connected conduits as listed below.
Allowable Fill (mm2): 3324.51
Description of Changes:

Included Cable No.	Conductor Type	Area (mm2)
A-3031-1	1-3/C + Gnd, #4, 600 V, EPR insulation	366.10
A-3032-1	1-3/C + Gnd, #4, 600 V, EPR insulation	366.10
A-3033-1	1-3/C + Gnd, #2, 600 V, EPR insulation	527.18
A-3034-1	1-3/C + Gnd, #2, 600 V, EPR insulation	527.18
A-3035-1	1-3/C + Gnd, #4, 600 V, EPR insulation	366.10
A-3036-1	1-3/C + Gnd, #4, 600 V, EPR insulation	366.10
Pull Rope	Soft-Fiber Polyester	0.00

Conduit/Tray No: 0377 | Reference: E-33, E-19
Size: 103 | Type: RGS conduit
From: Manhole-13 | To: Sta 1 + 63
Total Fill (mm2): 3163.08 | Remarks: Connect new conduit to existing conduit. Add new cable (s) and pull rope thru the entire length of the connected conduits as listed below.
Allowable Fill (mm2): 3324.51
Description of Changes:

Included Cable No.	Conductor Type	Area (mm2)
A-3039-1	1-3/C + Gnd, #2, 600 V, EPR insulation	527.18
A-3040-1	1-3/C + Gnd, #2, 600 V, EPR insulation	527.18
A-3041-1	1-3/C + Gnd, #2, 600 V, EPR insulation	527.18
A-3042-1	1-3/C + Gnd, #2, 600 V, EPR insulation	527.18
A-3043-1	1-3/C + Gnd, #2, 600 V, EPR insulation	527.18
A-3057-1	1-3/C + Gnd, #2, 600 V, EPR insulation	527.18
Pull Rope	Soft-Fiber Polyester	0.00

~~Conduit/Tray No: 0378 | Reference: E-33, E-19~~
~~Size: 103 | Type: RGS conduit~~
~~From: Manhole-13 | To: Sta 1 + 63~~
~~Total Fill (mm2): 2152.66 | Remarks: Connect new conduit to existing conduit. Add new cable (s) and pull rope thru the entire length of the connected conduits as listed below.~~
~~Allowable Fill (mm2): 3324.51~~
~~Description of Changes:~~

Included Cable No.	Conductor Type	Area (mm2)
Pull Rope	Soft-Fiber Polyester	0.00
S-2031-1	1-3/C + Gnd, #2, 600 V, EPR insulation	527.18
S-2032-1	1-3/C + Gnd, #4, 600 V, EPR insulation	366.10
S-3051-1	1-3/C + Gnd, #4, 600 V, EPR insulation	366.10
S-3052-1	1-3/C + Gnd, #2, 600 V, EPR insulation	527.18
S-3053-1	1-3/C + Gnd, #4, 600 V, EPR insulation	366.10

5

Conduit/Tray No: 0379 | Reference: E-33, E-19
Size: 103 | Type: RGS conduit
From: Manhole-13 | To: Sta 1 + 63
Total Fill (mm2): 2433.01 | Remarks: Connect new conduit to existing conduit. Add new cable (s) and pull rope thru the entire length of the connected conduits as listed below.
Allowable Fill (mm2): 3324.51
Description of Changes:

Included Cable No.	Conductor Type	Area (mm2)
A-2011-1	1-3/C + Gnd, #2, 600 V, EPR insulation	527.18
A-2012-1	1-3/C + Gnd, #2, 600 V, EPR insulation	527.18
A-2013-1	1-3/C + Gnd, #2, 600 V, EPR insulation	527.18
A-2014-1	1-3/C + Gnd, #2, 600 V, EPR insulation	527.18
A-2035-1	1-3/C + Gnd, #6, 600 V, EPR insulation	324.29
Pull Rope	Soft-Fiber Polyester	0.00

Conduit/Tray No: 0380 | Reference: E-33, E-19
Size: 103 | Type: RGS conduit
Manhole-13 | To: Sta 1 + 63
Total Fill (mm2): 2635.90 | Remarks: Connect new conduit to existing conduit. Add new cable (s) and pull rope thru the entire length of the connected conduits as listed below.
Allowable Fill (mm2): 3324.51
Description of Changes:

Included Cable No.	Conductor Type	Area (mm2)
2095	1-3/C + Gnd, #2, 600 V, EPR insulation	527.18
2096	1-3/C + Gnd, #2, 600 V, EPR insulation	527.18
2097	1-3/C + Gnd, #2, 600 V, EPR insulation	527.18
2098	1-3/C + Gnd, #2, 600 V, EPR insulation	527.18
2099	1-3/C + Gnd, #2, 600 V, EPR insulation	527.18
Pull Rope	Soft-Fiber Polyester	0.00

5 **REVISED PER ADDENDUM No. 5 DATED JULY 30, 2009**

CONDUIT AND TRAY SCHEDULE
UNDERGROUND

E-221

REVISED BY | DATE REVISED
CARMELO RIVERA | ELLERY LUCAS
CALCULATED-DESIGNED BY | CHECKED BY
CONSULTANT FUNCTIONAL SUPERVISOR
BEHZAD GOLEMOHAMMADI
STATE OF CALIFORNIA - DEPARTMENT OF TRANSPORTATION
Caltrans

LAST REVISION 00-00-00 | DATE PLOTTED => 28-JUL-2009 | TIME PLOTTED => 06:34

Dist	COUNTY	ROUTE	KILOMETER POST TOTAL PROJECT	SHEET No.	TOTAL SHEETS
04	SF	80	12.7/13.2	342	806

Caltrans Metric

2/14/08
REGISTERED ELECTRICAL ENGINEER

6-23-08
PLANS APPROVAL DATE

REGISTERED PROFESSIONAL ENGINEER FADI WALIEDDINE No. 11465 Exp. 12/31/09 ELECTRICAL STATE OF CALIFORNIA

THE STATE OF CALIFORNIA OR ITS OFFICERS OR AGENTS SHALL NOT BE RESPONSIBLE FOR THE ACCURACY OR COMPLETENESS OF ELECTRONIC COPIES OF THIS PLAN SHEET.

PB AMERICAS, Inc.
A Parsons Brinckerhoff Company
303 Second St., Suite 700N
San Francisco, CA 94107-1317

Conduit/Tray No:	0401
Reference:	E-33, E-20, E-22
Size:	103
Type:	RGS conduit
From:	(E) Manhole-16
To:	(E) Manhole-19
Total Fill (mm2):	2518.76
Remarks:	Existing conduit, add new cable (s) and pull rope thru the entire length of the connected conduits as listed below.
Allowable Fill (mm2):	3324.51
Description of Changes:	

Included Cable No.	Conductor Type	Area (mm2)
A-3001-1	1-3/C + Gnd, #4, 600 V, EPR insulation	366.10
A-3002-1	1-3/C + Gnd, #4, 600 V, EPR insulation	366.10
A-3003-1	1-3/C + Gnd, #4, 600 V, EPR insulation	366.10
A-3004-1	1-3/C + Gnd, #2, 600 V, EPR insulation	527.18
A-3005-1	1-3/C + Gnd, #2, 600 V, EPR insulation	527.18
A-3006-1	1-3/C + Gnd, #4, 600 V, EPR insulation	366.10
Pull Rope	Soft-Fiber Polyester	0.00

Conduit/Tray No:	0402
Reference:	E-33, E-20, E-22
Size:	103
Type:	RGS conduit
From:	(E) Manhole-16
To:	(E) Manhole-19
Total Fill (mm2):	2635.90
Remarks:	Existing conduit, add new cable (s) and pull rope thru the entire length of the connected conduits as listed below.
Allowable Fill (mm2):	3324.51
Description of Changes:	

Included Cable No.	Conductor Type	Area (mm2)
1095	1-3/C + Gnd, #2, 600 V, EPR insulation	527.18
1096	1-3/C + Gnd, #2, 600 V, EPR insulation	527.18
1097	1-3/C + Gnd, #2, 600 V, EPR insulation	527.18
1098	1-3/C + Gnd, #2, 600 V, EPR insulation	527.18
1099	1-3/C + Gnd, #2, 600 V, EPR insulation	527.18
Pull Rope	Soft-Fiber Polyester	0.00

Conduit/Tray No:	0403
Reference:	E-33, E-20, E-22
Size:	103
Type:	RGS conduit
From:	(E) Manhole-16
To:	(E) Manhole-19
Total Fill (mm2):	2519.96
Remarks:	Existing conduit, add new cable (s) and pull rope thru the entire length of the connected conduits as listed below.
Allowable Fill (mm2):	3324.51
Description of Changes:	

Included Cable No.	Conductor Type	Area (mm2)
1115	1-3/C + Gnd, #1/0, 600 V, EPR insulation	754.18
1117	1-3/C + Gnd, #2/0, 600 V, EPR insulation	882.89
1118	1-3/C + Gnd, #2/0, 600 V, EPR insulation	882.89
Pull Rope	Soft-Fiber Polyester	0.00

5

~~| | |~~
~~| --- | --- |~~
~~| Conduit/Tray No: | 0404 |~~
~~| Reference: | E-33, E-20, E-22 |~~
~~| Size: | 103 |~~
~~| Type: | RGS conduit |~~
~~| From: | (E) Manhole-16 |~~
~~| To: | (E) Manhole-19 |~~
~~| Total Fill (mm2): | 2380.12 |~~
~~| Remarks: | Existing conduit, add new cable (s) and pull rope thru the entire length of the connected conduits as listed below. |~~
~~| Allowable Fill (mm2): | 3324.51 |~~
~~| Description of Changes: | |~~

~~| Included Cable No. | Conductor Type | Area (mm2) |~~
~~| --- | --- | --- |~~
~~| A-3008-1 | 1-2/C + Gnd, #8, 600 V, EPR insulation | 227.46 |~~
~~| A-3009-1 | 1-3/C + Gnd, #2, 600 V, EPR insulation | 527.18 |~~
~~| A-3010-1 | 1-3/C + Gnd, #2, 600 V, EPR insulation | 527.18 |~~
~~| Pull Rope | Soft-Fiber Polyester | 0.00 |~~
~~| S-3021-1 | 1-3/C + Gnd, #4, 600 V, EPR insulation | 366.10 |~~
~~| S-3022-1 | 1-3/C + Gnd, #4, 600 V, EPR insulation | 366.10 |~~
~~| S-3023-1 | 1-3/C + Gnd, #4, 600 V, EPR insulation | 366.10 |~~

Conduit/Tray No:	0405
Reference:	E-33, E-20, E-22
Size:	103
Type:	RGS conduit
From:	(E) Manhole-16
To:	(E) Manhole-19
Total Fill (mm2):	3002.00
Remarks:	Existing conduit, add new cable (s) and pull rope thru the entire length of the connected conduits as listed below.
Allowable Fill (mm2):	3324.51
Description of Changes:	

Included Cable No.	Conductor Type	Area (mm2)
A-1011-1	1-3/C + Gnd, #2, 600 V, EPR insulation	527.18
A-1012-1	1-3/C + Gnd, #2, 600 V, EPR insulation	527.18
A-1013-1	1-3/C + Gnd, #2, 600 V, EPR insulation	527.18
A-1014-1	1-3/C + Gnd, #2, 600 V, EPR insulation	527.18
Pull Rope	Soft-Fiber Polyester	0.00
S-1031-1	1-3/C + Gnd, #2, 600 V, EPR insulation	527.18
S-1032-1	1-3/C + Gnd, #4, 600 V, EPR insulation	366.10

5 **REVISED PER ADDENDUM No. 5 DATED JULY 30, 2009**

CONDUIT AND TRAY SCHEDULE
UNDERGROUND

E-223

REVISED BY | DATE REVISED
CARMELO RIVERA | ELLERY LUCAS
CALCULATED-DESIGNED BY | CHECKED BY
CONSULTANT FUNCTIONAL SUPERVISOR
BEHZAD GOLEMOHAMMADI
STATE OF CALIFORNIA - DEPARTMENT OF TRANSPORTATION
Caltrans

LAST REVISION 00-00-00 | DATE PLOTTED => 28-JUL-2009 | TIME PLOTTED => 06:34

Dist	COUNTY	ROUTE	KILOMETER POST TOTAL PROJECT	SHEET No.	TOTAL SHEETS
04	SF	80	12.7/13.2	343	806

Caltrans Metric

2/14/08
REGISTERED ELECTRICAL ENGINEER

6-23-08
PLANS APPROVAL DATE

REGISTERED PROFESSIONAL ENGINEER
FADI WALIEDDINE
No. 11465
Exp. 12/31/09
ELECTRICAL
STATE OF CALIFORNIA

THE STATE OF CALIFORNIA OR ITS OFFICERS OR AGENTS SHALL NOT BE RESPONSIBLE FOR THE ACCURACY OR COMPLETENESS OF ELECTRONIC COPIES OF THIS PLAN SHEET.

PB AMERICAS, Inc.
A Parsons Brinckerhoff Company
303 Second St., Suite 700N
San Francisco, CA 94107-1317

Conduit/Tray No: 0406 | Reference: E-33, E-20, E-22
Size: 103 | Type: RGS conduit
From: (E) Manhole-16 | To: (E) Manhole-19
Total Fill (mm2): 2554.41 | Remarks: Existing conduit, add new cable (s) and pull rope thru the entire length of the connected conduits as listed below.
Allowable Fill (mm2): 3324.51
Description of Changes:

Included Cable No.	Conductor Type	Area (mm2)
1106	1-3/C + Gnd, #6, 600 V, EPR insulation	324.29
A-1035-1	1-3/C + Gnd, #6, 600 V, EPR insulation	324.29
A-3011-1	1-3/C + Gnd, #2, 600 V, EPR insulation	527.18
A-3012-1	1-3/C + Gnd, #2, 600 V, EPR insulation	527.18
A-3013-1	1-3/C + Gnd, #2, 600 V, EPR insulation	527.18
Pull Rope	Soft-Fiber Polyester	0.00
S-3056-1	1-3/C + Gnd, #6, 600 V, EPR insulation	324.29

Conduit/Tray No: 0409 | Reference: E-33, E-21, E-22
103 | Type: RGS conduit
From: (E) Manhole-17 | To: (E) Manhole-20
Total Fill (mm2): 2780.99 | Remarks: Existing conduit, add new cable (s) and pull rope thru the entire length of the connected conduits as listed below.
Allowable Fill (mm2): 3324.51
Description of Changes:

Included Cable No.	Conductor Type	Area (mm2)
1391	3-1/C #4/0, 15 KV, EPR insulation	2780.99
Pull Rope	Soft-Fiber Polyester	0.00

~~Conduit/Tray No: 041 | Reference: E-13~~
~~Size: 78 | Type: RGS conduit~~
~~From: Stub-up below (E) T20 | To: (E) 480 V LVCC-A~~
~~Total Fill (mm2): 1742.93 | Remarks: Existing conduit, add new cable (s) and pull rope as listed below.~~
~~Allowable Fill (mm2): 1935.24~~
~~Description of Changes:~~

Included Cable No.	Conductor Type	Area (mm2)
1098	1-3/C + Gnd, #2, 600 V, EPR insulation	527.18
A-1005-1	1-3/C + Gnd, #8, 600 V, EPR insulation	262.68
A-1006-1	1-3/C + Gnd, #8, 600 V, EPR insulation	262.68
A-1007-1	1-3/C + Gnd, #4, 600 V, EPR insulation	366.10
A-1008-1	1-3/C + Gnd, #6, 600 V, EPR insulation	324.29
Pull Rope	Soft-Fiber Polyester	0.00

5

Conduit/Tray No: 0410 | Reference: E-33, E-21, E-23
Size: 103 | Type: RGS conduit
From: (E) Manhole-18 | To: (E) Manhole-21
Total Fill (mm2): 970.95 | Remarks: Existing conduit, add new cable (s) and pull rope thru the entire length of the connected conduits as listed below.
Allowable Fill (mm2): 3324.51
Description of Changes:

Included Cable No.	Conductor Type	Area (mm2)
1475-3	72 Fiber, single mode fiber optic riser cable	323.65
1477-1	72 Fiber, single mode fiber optic riser cable	323.65
2475-4	72 Fiber, single mode fiber optic riser cable	323.65
Pull Rope	Soft-Fiber Polyester	0.00

Conduit/Tray No: 0412 | Reference: E-33, E-21, E-23
Size: 103 | Type: RGS conduit
From: (E) Manhole-18 | To: (E) Manhole-21
Total Fill (mm2): 1201.71 | Remarks: Existing conduit, add new cable (s) and pull rope thru the entire length of the connected conduits as listed below.
Allowable Fill (mm2): 4404.97
Description of Changes:

Included Cable No.	Conductor Type	Area (mm2)
1474-4	50 pair #18, shielded pairs, IS/OS shield 600 V, XLPE insul., PVC jacket	1201.71
Pull Rope	Soft-Fiber Polyester	0.00

5 **REVISED PER ADDENDUM No. 5 DATED JULY 30, 2009**

CONDUIT AND TRAY SCHEDULE
UNDERGROUND

E-224

REVISED BY | DATE REVISED
CARMELO RIVERA | ELLERY LUCAS
CALCULATED-DESIGNED BY | CHECKED BY
CONSULTANT FUNCTIONAL SUPERVISOR
BEHZAD GOLEMOHAMMADI
STATE OF CALIFORNIA - DEPARTMENT OF TRANSPORTATION
Caltrans

LAST REVISION 00-00-00 | DATE PLOTTED => 28-JUL-2009 | TIME PLOTTED => 06:34

Dist	COUNTY	ROUTE	KILOMETER POST TOTAL PROJECT	SHEET No.	TOTAL SHEETS
04	SF	80	12.7/13.2	345	806

Caltrans Metric

2/14/08
REGISTERED ELECTRICAL ENGINEER

6-23-08
PLANS APPROVAL DATE

REGISTERED PROFESSIONAL ENGINEER
FADI WALIEDDINE
No. 11465
Exp. 12/31/09
ELECTRICAL
STATE OF CALIFORNIA

THE STATE OF CALIFORNIA OR ITS OFFICERS OR AGENTS SHALL NOT BE RESPONSIBLE FOR THE ACCURACY OR COMPLETENESS OF ELECTRONIC COPIES OF THIS PLAN SHEET.

PB AMERICAS, Inc.
A Parsons Brinckerhoff Company
303 Second St., Suite 700N
San Francisco, CA 94107-1317

~~Conduit/Tray No: 0428 | Reference: E-33, E-20, E-22~~
~~Size: 103 | Type: RGS conduit~~
~~From: (E) Manhole-16 | To: (E) Manhole-19~~
~~Total Fill (mm2): 2152.66 | Remarks: Existing conduit, add new cable (s) and pull rope thru the entire length of the connected conduits as listed below.~~
~~Allowable Fill (mm2): 3324.51~~
~~Description of Changes:~~

Included Cable No.	Conductor Type	Area (mm2)
Pull Rope	Soft-Fiber Polyester	0.00
S-2031-1	1-3/C + Gnd, #2, 600 V, EPR insulation	527.18
S-2032-1	1-3/C + Gnd, #4, 600 V, EPR insulation	366.10
S-3051-1	1-3/C + Gnd, #4, 600 V, EPR insulation	366.10
S-3052-1	1-3/C + Gnd, #2, 600 V, EPR insulation	527.18
S-3053-1	1-3/C + Gnd, #4, 600 V, EPR insulation	366.10

5

Conduit/Tray No: 0429 | Reference: E-33, E-20, E-22
Size: 103 | Type: RGS conduit
From: (E) Manhole-16 | To: (E) Manhole-19
Total Fill (mm2): 2433.01 | Remarks: Existing conduit, add new cable (s) and pull rope thru the entire length of the connected conduits as listed below.
Allowable Fill (mm2): 3324.51
Description of Changes:

Included Cable No.	Conductor Type	Area (mm2)
A-2011-1	1-3/C + Gnd, #2, 600 V, EPR insulation	527.18
A-2012-1	1-3/C + Gnd, #2, 600 V, EPR insulation	527.18
A-2013-1	1-3/C + Gnd, #2, 600 V, EPR insulation	527.18
A-2014-1	1-3/C + Gnd, #2, 600 V, EPR insulation	527.18
A-2035-1	1-3/C + Gnd, #6, 600 V, EPR insulation	324.29
Pull Rope	Soft-Fiber Polyester	0.00

Conduit/Tray No: 0430 | Reference: E-33, E-20, E-22
Size: 103 | Type: RGS conduit
From: (E) Manhole-16 | To: (E) Manhole-19
Total Fill (mm2): 2635.90 | Remarks: Existing conduit, add new cable (s) and pull rope thru the entire length of the connected conduits as listed below.
Allowable Fill (mm2): 3324.51
Description of Changes:

Included Cable No.	Conductor Type	Area (mm2)
2095	1-3/C + Gnd, #2, 600 V, EPR insulation	527.18
2096	1-3/C + Gnd, #2, 600 V, EPR insulation	527.18
2097	1-3/C + Gnd, #2, 600 V, EPR insulation	527.18
2098	1-3/C + Gnd, #2, 600 V, EPR insulation	527.18
2099	1-3/C + Gnd, #2, 600 V, EPR insulation	527.18
Pull Rope	Soft-Fiber Polyester	0.00

Conduit/Tray No: 0433 | Reference: E-33, E-21, E-22
Size: 103 | Type: RGS conduit
From: (E) Manhole-17 | To: (E) Manhole-20
Total Fill (mm2): 2780.99 | Remarks: Existing conduit, add new cable (s) and pull rope thru the entire length of the connected conduits as listed below.
Allowable Fill (mm2): 3324.51
Description of Changes:

Included Cable No.	Conductor Type	Area (mm2)
2391	3-1/C #4/0, 15 KV, EPR insulation	2780.99
Pull Rope	Soft-Fiber Polyester	0.00

Conduit/Tray No: 0436 | Reference: E-33, E-21, E-23
Size: 103 | Type: RGS conduit
From: (E) Manhole-18 | To: (E) Manhole-21
Total Fill (mm2): 124.55 | Remarks: Existing conduit, add new cable (s) and pull rope thru the entire length of the connected conduits as listed below.
Allowable Fill (mm2): 2576.49
Description of Changes:

Included Cable No.	Conductor Type	Area (mm2)
2910-2	4 pair #24, overall shielded, 300 V, PE insulation (Type IC)	77.13
2910-3	4 pair #22, shielded pairs, FEP insulation (Type SSC)	47.42
Pull Rope	Soft-Fiber Polyester	0.00

Conduit/Tray No: 0437 | Reference: E-33, E-21, E-23
Size: 103 | Type: RGS conduit
From: (E) Manhole-18 | To: (E) Manhole-21
Total Fill (mm2): 1201.71 | Remarks: Existing conduit, add new cable (s) and pull rope thru the entire length of the connected conduits as listed below.
Allowable Fill (mm2): 4404.97
Description of Changes:

Included Cable No.	Conductor Type	Area (mm2)
1473-4	50 pair #18, shielded pairs, IS/OS shield 600 V, XLPE insul., PVC jacket	1201.71
Pull Rope	Soft-Fiber Polyester	0.00

5 **REVISED PER ADDENDUM No. 5 DATED JULY 30, 2009**

CONDUIT AND TRAY SCHEDULE
UNDERGROUND

E-226

REVISED BY | DATE REVISED
CARMELO RIVERA | ELLERY LUCAS
CALCULATED-DESIGNED BY | CHECKED BY
CONSULTANT FUNCTIONAL SUPERVISOR
BEHZAD GOLEMOHAMMADI

STATE OF CALIFORNIA - DEPARTMENT OF TRANSPORTATION
Caltrans

LAST REVISION 00-00-00 | DATE PLOTTED => 28-JUL-2009 | TIME PLOTTED => 06:34

Dist	COUNTY	ROUTE	KILOMETER POST TOTAL PROJECT	SHEET No.	TOTAL SHEETS
04	SF	80	12.7/13.2	347	806

REGISTERED ELECTRICAL ENGINEER 2/14/08

6-23-08
PLANS APPROVAL DATE

REGISTERED PROFESSIONAL ENGINEER FADI WALIEDDINE No. 11465 Exp. 12/31/09 ELECTRICAL STATE OF CALIFORNIA

THE STATE OF CALIFORNIA OR ITS OFFICERS OR AGENTS SHALL NOT BE RESPONSIBLE FOR THE ACCURACY OR COMPLETENESS OF ELECTRONIC COPIES OF THIS PLAN SHEET.

PB AMERICAS, Inc.
A Parsons Brinckerhoff Company
303 Second St., Suite 700N
San Francisco, CA 94107-1317

Caltrans Metric

5

~~Conduit/Tray No: 0454 | Reference: E-34, E-22, E-23~~
~~Size: 103 | Type: RGS conduit~~
~~From: (E) Manhole-19 | To: (E) Manhole-22~~
~~Total Fill (mm2): 2380.12 | Remarks: Existing conduit, add new cable (s) and pull rope thru the entire length of the connected conduits as listed below.~~
~~Allowable Fill (mm2): 3324.51~~
~~Description of Changes:~~

Included Cable No.	Conductor Type	Area (mm2)
A-3008-1	1-2/C + Gnd, #8, 600 V, EPR insulation	227.46
A-3009-1	1-3/C + Gnd, #2, 600 V, EPR insulation	527.18
A-3010-1	1-3/C + Gnd, #2, 600 V, EPR insulation	527.18
Pull Rope	Soft-Fiber Polyester	0.00
S-3021-1	1-3/C + Gnd, #4, 600 V, EPR insulation	366.10
S-3022-1	1-3/C + Gnd, #4, 600 V, EPR insulation	366.10
S-3023-1	1-3/C + Gnd, #4, 600 V, EPR insulation	366.10

Conduit/Tray No: 0455 | Reference: E-34, E-22, E-23
Size: 103 | Type: RGS conduit
From: (E) Manhole-19 | To: (E) Manhole-22
Total Fill (mm2): 3002.00 | Remarks: Existing conduit, add new cable (s) and pull rope thru the entire length of the connected conduits as listed below.
Allowable Fill (mm2): 3324.51
Description of Changes:

Included Cable No.	Conductor Type	Area (mm2)
A-1011-1	1-3/C + Gnd, #2, 600 V, EPR insulation	527.18
A-1012-1	1-3/C + Gnd, #2, 600 V, EPR insulation	527.18
A-1013-1	1-3/C + Gnd, #2, 600 V, EPR insulation	527.18
A-1014-1	1-3/C + Gnd, #2, 600 V, EPR insulation	527.18
Pull Rope	Soft-Fiber Polyester	0.00
S-1031-1	1-3/C + Gnd, #2, 600 V, EPR insulation	527.18
S-1032-1	1-3/C + Gnd, #4, 600 V, EPR insulation	366.10

Conduit/Tray No: 0456 | Reference: E-34, E-22, E-23
Size: 103 | Type: RGS conduit
From: (E) Manhole-19 | To: (E) Manhole-22
Total Fill (mm2): 2554.41 | Remarks: Existing conduit, add new cable (s) and pull rope thru the entire length of the connected conduits as listed below.
Allowable Fill (mm2): 3324.51
Description of Changes:

Included Cable No.	Conductor Type	Area (mm2)
1106	1-3/C + Gnd, #6, 600 V, EPR insulation	324.29
A-1035-1	1-3/C + Gnd, #6, 600 V, EPR insulation	324.29
A-3011-1	1-3/C + Gnd, #2, 600 V, EPR insulation	527.18
A-3012-1	1-3/C + Gnd, #2, 600 V, EPR insulation	527.18
A-3013-1	1-3/C + Gnd, #2, 600 V, EPR insulation	527.18
Pull Rope	Soft-Fiber Polyester	0.00
S-3056-1	1-3/C + Gnd, #6, 600 V, EPR insulation	324.29

Conduit/Tray No: 0459 | Reference: E-34, E-22, E-24
Size: 103 | Type: RGS conduit
From: (E) Manhole-20 | To: (E) Manhole-23
Total Fill (mm2): 2780.99 | Remarks: Existing conduit, add new cable (s) and pull rope thru the entire length of the connected conduits as listed below.
Allowable Fill (mm2): 3324.51
Description of Changes:

Included Cable No.	Conductor Type	Area (mm2)
1391	3-1/C #4/0, 15 KV, EPR insulation	2780.99
Pull Rope	Soft-Fiber Polyester	0.00

Conduit/Tray No: 0460 | Reference: E-34, E-23, E-24
Size: 103 | Type: RGS conduit
From: (E) Manhole-21 | To: (E) Manhole-24
Total Fill (mm2): 970.95 | Remarks: Existing conduit, add new cable (s) and pull rope thru the entire length of the connected conduits as listed below.
Allowable Fill (mm2): 3324.51
Description of Changes:

Included Cable No.	Conductor Type	Area (mm2)
1475-3	72 Fiber, single mode fiber optic riser cable	323.65
1477-1	72 Fiber, single mode fiber optic riser cable	323.65
2475-4	72 Fiber, single mode fiber optic riser cable	323.65
Pull Rope	Soft-Fiber Polyester	0.00

Conduit/Tray No: 0462 | Reference: E-34, E-23, E-24
Size: 103 | Type: RGS conduit
From: (E) Manhole-21 | To: (E) Manhole-24
Total Fill (mm2): 1201.71 | Remarks: Existing conduit, add new cable (s) and pull rope thru the entire length of the connected conduits as listed below.
Allowable Fill (mm2): 4404.97
Description of Changes:

Included Cable No.	Conductor Type	Area (mm2)
1474-4	50 pair #18, shielded pairs, IS/OS shield 600 V, XLPE insul., PVC jacket	1201.71
Pull Rope	Soft-Fiber Polyester	0.00

5 **REVISED PER ADDENDUM No. 5 DATED JULY 30, 2009**

CONDUIT AND TRAY SCHEDULE
UNDERGROUND

E-228

STATE OF CALIFORNIA - DEPARTMENT OF TRANSPORTATION
Caltrans

CONSULTANT FUNCTIONAL SUPERVISOR: BEHZAD GOLEMOHAMMADI
CALCULATED-DESIGNED BY: CARMELO RIVERA
CHECKED BY: ELLERY LUCAS
REVISED BY | DATE REVISED

LAST REVISION 00-00-00
DATE PLOTTED => 28-JUL-2009
TIME PLOTTED => 06:35

Dist	COUNTY	ROUTE	KILOMETER POST TOTAL PROJECT	SHEET No.	TOTAL SHEETS
04	SF	80	12.7/13.2	349	806

Caltrans Metric

2/14/08
REGISTERED ELECTRICAL ENGINEER

6-23-08
PLANS APPROVAL DATE

REGISTERED PROFESSIONAL ENGINEER FADI WALIEDDINE No. 11465 Exp. 12/31/09 ELECTRICAL STATE OF CALIFORNIA

THE STATE OF CALIFORNIA OR ITS OFFICERS OR AGENTS SHALL NOT BE RESPONSIBLE FOR THE ACCURACY OR COMPLETENESS OF ELECTRONIC COPIES OF THIS PLAN SHEET.

PB AMERICAS, Inc.
A Parsons Brinckerhoff Company
303 Second St., Suite 700N
San Francisco, CA 94107-1317

~~Conduit/Tray No: 0478 | Reference: E-34, E-22, E-23~~
~~Size: 103 | Type: RGS conduit~~
~~From: (E) Manhole-19 | To: (E) Manhole-22~~
~~Total Fill (mm2): 2152.66 | Remarks: Existing conduit, add new cable (s) and pull rope thru the entire length of the connected conduits as listed below.~~
~~Allowable Fill (mm2): 3324.51~~
~~Description of Changes:~~

Included Cable No.	Conductor Type	Area (mm2)
~~Pull Rope~~	~~Soft-Fiber Polyester~~	~~0.00~~
~~S-2031-1~~	~~1-3/C + Gnd, #2, 600 V, EPR insulation~~	~~527.18~~
~~S-2032-1~~	~~1-3/C + Gnd, #4, 600 V, EPR insulation~~	~~366.10~~
~~S-3051-1~~	~~1-3/C + Gnd, #4, 600 V, EPR insulation~~	~~366.10~~
~~S-3052-1~~	~~1-3/C + Gnd, #2, 600 V, EPR insulation~~	~~527.18~~
~~S-3053-1~~	~~1-3/C + Gnd, #4, 600 V, EPR insulation~~	~~366.10~~

Conduit/Tray No: 0479 | Reference: E-34, E-22, E-23
Size: 103 | Type: RGS conduit
From: (E) Manhole-19 | To: (E) Manhole-22
Total Fill (mm2): 2433.01 | Remarks: Existing conduit, add new cable (s) and pull rope thru the entire length of the connected conduits as listed below.
Allowable Fill (mm2): 3324.51
Description of Changes:

Included Cable No.	Conductor Type	Area (mm2)
A-2011-1	1-3/C + Gnd, #2, 600 V, EPR insulation	527.18
A-2012-1	1-3/C + Gnd, #2, 600 V, EPR insulation	527.18
A-2013-1	1-3/C + Gnd, #2, 600 V, EPR insulation	527.18
A-2014-1	1-3/C + Gnd, #2, 600 V, EPR insulation	527.18
A-2035-1	1-3/C + Gnd, #6, 600 V, EPR insulation	324.29
Pull Rope	Soft-Fiber Polyester	0.00

Conduit/Tray No: 048 | Reference: E-13
Size: 78 | Type: RGS conduit
From: Stub-up below (E) T20 | To: (E) 480 V LVCC-A
Total Fill (mm2): 648.58 | Remarks: Existing conduit, add new cable (s) and pull rope as listed below.
Allowable Fill (mm2): 1499.81
Description of Changes:

Included Cable No.	Conductor Type	Area (mm2)
1105	1-3/C + Gnd, #6, 600 V, EPR insulation	324.29
Pull Rope	Soft-Fiber Polyester	0.00
S-1024-1	1-3/C + Gnd, #6, 600 V, EPR insulation	324.29

5

Conduit/Tray No: 0480 | Reference: E-34, E-22, E-23
Size: 103 | Type: RGS conduit
From: (E) Manhole-19 | To: (E) Manhole-22
Total Fill (mm2): 2635.90 | Remarks: Existing conduit, add new cable (s) and pull rope thru the entire length of the connected conduits as listed below.
Allowable Fill (mm2): 3324.51
Description of Changes:

Included Cable No.	Conductor Type	Area (mm2)
2095	1-3/C + Gnd, #2, 600 V, EPR insulation	527.18
2096	1-3/C + Gnd, #2, 600 V, EPR insulation	527.18
2097	1-3/C + Gnd, #2, 600 V, EPR insulation	527.18
2098	1-3/C + Gnd, #2, 600 V, EPR insulation	527.18
2099	1-3/C + Gnd, #2, 600 V, EPR insulation	527.18
Pull Rope	Soft-Fiber Polyester	0.00

Conduit/Tray No: 0483 | Reference: E-34, E-22, E-24
Size: 103 | Type: RGS conduit
From: (E) Manhole-20 | To: (E) Manhole-23
Total Fill (mm2): 2780.99 | Remarks: Existing conduit, add new cable (s) and pull rope thru the entire length of the connected conduits as listed below.
Allowable Fill (mm2): 3324.51
Description of Changes:

Included Cable No.	Conductor Type	Area (mm2)
2391	3-1/C #4/0, 15 KV, EPR insulation	2780.99
Pull Rope	Soft-Fiber Polyester	0.00

Conduit/Tray No: 0486 | Reference: E-34, E-23, E-24
Size: 103 | Type: RGS conduit
From: (E) Manhole-21 | To: (E) Manhole-24
Total Fill (mm2): 124.55 | Remarks: Existing conduit, add new cable (s) and pull rope thru the entire length of the connected conduits as listed below.
Allowable Fill (mm2): 2576.49
Description of Changes:

Included Cable No.	Conductor Type	Area (mm2)
2910-2	4 pair #24, overall shielded, 300 V, PE insulation (Type IC)	77.13
2910-3	4 pair #22, shielded pairs, FEP insulation (Type SSC)	47.42
Pull Rope	Soft-Fiber Polyester	0.00

5 **REVISED PER ADDENDUM No. 5 DATED JULY 30, 2009**

CONDUIT AND TRAY SCHEDULE
UNDERGROUND

E-230

REVISED BY | DATE REVISED
CARMELO RIVERA | ELLERY LUCAS
CALCULATED-DESIGNED BY | CHECKED BY
CONSULTANT FUNCTIONAL SUPERVISOR
BEHZAD GOLEMOHAMMADI
STATE OF CALIFORNIA - DEPARTMENT OF TRANSPORTATION
Caltrans

LAST REVISION 00-00-00 | DATE PLOTTED => 28-JUL-2009 | TIME PLOTTED => 06:35

Dist	COUNTY	ROUTE	KILOMETER POST TOTAL PROJECT	SHEET No.	TOTAL SHEETS
04	SF	80	12.7/13.2	350	806

Caltrans Metric

2/14/08
REGISTERED ELECTRICAL ENGINEER

6-23-08
PLANS APPROVAL DATE

REGISTERED PROFESSIONAL ENGINEER
FADI WALIEDDINE
No. 11465
Exp. 12/31/09
ELECTRICAL
STATE OF CALIFORNIA

THE STATE OF CALIFORNIA OR ITS OFFICERS OR AGENTS SHALL NOT BE RESPONSIBLE FOR THE ACCURACY OR COMPLETENESS OF ELECTRONIC COPIES OF THIS PLAN SHEET.

PB AMERICAS, Inc.
A Parsons Brinckerhoff Company
303 Second St., Suite 700N
San Francisco, CA 94107-1317

Conduit/Tray No:	0487
Reference:	E-34, E-23, E-24
Size:	103
Type:	RGS conduit
From:	(E) Manhole-21
To:	(E) Manhole-24
Total Fill (mm2):	1201.71
Allowable Fill (mm2):	4404.97
Remarks:	Existing conduit, add new cable (s) and pull rope thru the entire length of the connected conduits as listed below.
Description of Changes:	

Included Cable No.	Conductor Type	Area (mm2)
1473-4	50 pair #18, shielded pairs, IS/OS shield 600 V, XLPE insul., PVC jacket	1201.71
Pull Rope	Soft-Fiber Polyester	0.00

Conduit/Tray No:	0500
Reference:	E-34, E-25, E-23
Size:	103
Type:	RGS conduit
From:	Sta 4 + 85
To:	(E) Manhole-25
Total Fill (mm2):	1277.47
Allowable Fill (mm2):	3324.51
Remarks:	Connect new conduit to existing conduit. Add new cable (s) and pull rope thru the entire length of the connected conduits as listed below.
Description of Changes:	

Included Cable No.	Conductor Type	Area (mm2)
2119-A	3 + 1 Gnd, 250 kcmil, #1/0, 600 V, RHH/RHW insulation	1277.47
Pull Rope	Soft-Fiber Polyester	0.00

Conduit/Tray No:	0501
Reference:	E-34, E-25, E-23
Size:	103
Type:	RGS conduit
From:	Sta 4 + 85
To:	(E) Manhole-25
Total Fill (mm2):	2518.76
Allowable Fill (mm2):	3324.51
Remarks:	Connect new conduit to existing conduit. Add new cable (s) and pull rope thru the entire length of the connected conduits as listed below.
Description of Changes:	

Included Cable No.	Conductor Type	Area (mm2)
A-3001-1	1-3/C + Gnd, #4, 600 V, EPR insulation	366.10
A-3002-1	1-3/C + Gnd, #4, 600 V, EPR insulation	366.10
A-3003-1	1-3/C + Gnd, #4, 600 V, EPR insulation	366.10
A-3004-1	1-3/C + Gnd, #2, 600 V, EPR insulation	527.18
A-3005-1	1-3/C + Gnd, #2, 600 V, EPR insulation	527.18
A-3006-1	1-3/C + Gnd, #4, 600 V, EPR insulation	366.10
Pull Rope	Soft-Fiber Polyester	0.00

Conduit/Tray No:	0502
Reference:	E-34, E-25, E-23
Size:	103
Type:	RGS conduit
From:	Sta 4 + 85
To:	(E) Manhole-25
Total Fill (mm2):	2635.90
Allowable Fill (mm2):	3324.51
Remarks:	Connect new conduit to existing conduit. Add new cable (s) and pull rope thru the entire length of the connected conduits as listed below.
Description of Changes:	

Included Cable No.	Conductor Type	Area (mm2)
1095	1-3/C + Gnd, #2, 600 V, EPR insulation	527.18
1096	1-3/C + Gnd, #2, 600 V, EPR insulation	527.18
1097	1-3/C + Gnd, #2, 600 V, EPR insulation	527.18
1098	1-3/C + Gnd, #2, 600 V, EPR insulation	527.18
1099	1-3/C + Gnd, #2, 600 V, EPR insulation	527.18
Pull Rope	Soft-Fiber Polyester	0.00

Conduit/Tray No:	0503
Reference:	E-34, E-25, E-23
Size:	103
Type:	RGS conduit
From:	Sta 4 + 85
To:	(E) Manhole-25
Total Fill (mm2):	2519.96
Allowable Fill (mm2):	3324.51
Remarks:	Connect new conduit to existing conduit. Add new cable (s) and pull rope thru the entire length of the connected conduits as listed below.
Description of Changes:	

Included Cable No.	Conductor Type	Area (mm2)
1115	1-3/C + Gnd, #1/0, 600 V, EPR insulation	754.18
1117	1-3/C + Gnd, #2/0, 600 V, EPR insulation	882.89
1118	1-3/C + Gnd, #2/0, 600 V, EPR insulation	882.89
Pull Rope	Soft-Fiber Polyester	0.00

Conduit/Tray No:	0504
Reference:	E-34, E-25, E-23
Size:	103
Type:	RGS conduit
From:	Sta 4 + 85
To:	(E) Manhole-25
Total Fill (mm2):	2380.12
Allowable Fill (mm2):	3324.51
Remarks:	Connect new conduit to existing conduit. Add new cable (s) and pull rope thru the entire length of the connected conduits as listed below.
Description of Changes:	

Included Cable No.	Conductor Type	Area (mm2)
A-3008-1	1-2/C + Gnd, #8, 600 V, EPR insulation	227.46
A-3009-1	1-3/C + Gnd, #2, 600 V, EPR insulation	527.18
A-3010-1	1-3/C + Gnd, #2, 600 V, EPR insulation	527.18
Pull Rope	Soft-Fiber Polyester	0.00
S-3021-1	1-3/C + Gnd, #4, 600 V, EPR insulation	366.10
S-3022-1	1-3/C + Gnd, #4, 600 V, EPR insulation	366.10
S-3023-1	1-3/C + Gnd, #4, 600 V, EPR insulation	366.10

5

5 **REVISED PER ADDENDUM No. 5 DATED JULY 30, 2009**

CONDUIT AND TRAY SCHEDULE
UNDERGROUND

E-231

REVISED BY | DATE REVISED
CARMELO RIVERA | ELLERY LUCAS
CALCULATED-DESIGNED BY | CHECKED BY
CONSULTANT FUNCTIONAL SUPERVISOR
BEHZAD GOLEMOHAMMADI
STATE OF CALIFORNIA - DEPARTMENT OF TRANSPORTATION
Caltrans

LAST REVISION 00-00-00 | DATE PLOTTED => 28-JUL-2009 | TIME PLOTTED => 06:35

Dist	COUNTY	ROUTE	KILOMETER POST TOTAL PROJECT	SHEET No.	TOTAL SHEETS
04	SF	80	12.7/13.2	354	806

Caltrans Metric

2/14/08
REGISTERED ELECTRICAL ENGINEER

6-23-08
PLANS APPROVAL DATE

REGISTERED PROFESSIONAL ENGINEER FADI WALIEDDINE No. 11465 Exp. 12/31/09 ELECTRICAL STATE OF CALIFORNIA

THE STATE OF CALIFORNIA OR ITS OFFICERS OR AGENTS SHALL NOT BE RESPONSIBLE FOR THE ACCURACY OR COMPLETENESS OF ELECTRONIC COPIES OF THIS PLAN SHEET.

PB AMERICAS, Inc.
A Parsons Brinckerhoff Company
303 Second St., Suite 700N
San Francisco, CA 94107-1317

Conduit/Tray No:	0527
Reference:	E-34, E-25, E-23
Size:	103
Type:	RGS conduit
From:	Sta 4 + 85
To:	(E) Manhole-25
Total Fill (mm2):	3163.08
Remarks:	Connect new conduit to existing conduit. Add new cable (s) and pull rope thru the entire length of the connected conduits as listed below.
Allowable Fill (mm2):	3324.51
Description of Changes:	

Included Cable No.	Conductor Type	Area (mm2)
A-3039-1	1-3/C + Gnd, #2, 600 V, EPR insulation	527.18
A-3040-1	1-3/C + Gnd, #2, 600 V, EPR insulation	527.18
A-3041-1	1-3/C + Gnd, #2, 600 V, EPR insulation	527.18
A-3042-1	1-3/C + Gnd, #2, 600 V, EPR insulation	527.18
A-3043-1	1-3/C + Gnd, #2, 600 V, EPR insulation	527.18
A-3057-1	1-3/C + Gnd, #2, 600 V, EPR insulation	527.18
Pull Rope	Soft-Fiber Polyester	0.00

Conduit/Tray No:	0528
Reference:	E-34, E-25, E-28
Size:	103
Type:	RGS conduit
From:	Sta 4 + 85
To:	(E) Manhole-25
Total Fill (mm2):	2152.66
Remarks:	Connect new conduit to existing conduit. Add new cable (s) and pull rope thru the entire length of the connected conduits as listed below.
Allowable Fill (mm2):	3324.51
Description of Changes:	

Included Cable No.	Conductor Type	Area (mm2)
Pull Rope	Soft-Fiber Polyester	0.00
S-2031-1	1-3/C + Gnd, #2, 600 V, EPR insulation	527.18
S-2032-1	1-3/C + Gnd, #4, 600 V, EPR insulation	366.10
S-3051-1	1-3/C + Gnd, #4, 600 V, EPR insulation	366.10
S-3052-1	1-3/C + Gnd, #2, 600 V, EPR insulation	527.18
S-3053-1	1-3/C + Gnd, #4, 600 V, EPR insulation	366.10

Conduit/Tray No:	0529
Reference:	E-34, E-25, E-23
Size:	103
Type:	RGS conduit
From:	Sta 4 + 85
To:	(E) Manhole-25
Total Fill (mm2):	2433.01
Remarks:	Connect new conduit to existing conduit. Add new cable (s) and pull rope thru the entire length of the connected conduits as listed below.
Allowable Fill (mm2):	3324.51
Description of Changes:	

Included Cable No.	Conductor Type	Area (mm2)
A-2011-1	1-3/C + Gnd, #2, 600 V, EPR insulation	527.18
A-2012-1	1-3/C + Gnd, #2, 600 V, EPR insulation	527.18
A-2013-1	1-3/C + Gnd, #2, 600 V, EPR insulation	527.18
A-2014-1	1-3/C + Gnd, #2, 600 V, EPR insulation	527.18
A-2035-1	1-3/C + Gnd, #6, 600 V, EPR insulation	324.29
Pull Rope	Soft-Fiber Polyester	0.00

5

Conduit/Tray No:	053
Reference:	E-13
Size:	78
Type:	RGS conduit
From:	Stub-up below (E) T20
To:	(E) 480 V LVCC-A
Total Fill (mm2):	527.18
Remarks:	Existing conduit, add new cable (s) and pull rope as listed below.
Allowable Fill (mm2):	1935.24
Description of Changes:	

Included Cable No.	Conductor Type	Area (mm2)
A-1014-1	1-3/C + Gnd, #2, 600 V, EPR insulation	527.18
Pull Rope	Soft-Fiber Polyester	0.00

Conduit/Tray No:	0530
Reference:	E-34, E-25, E-23
Size:	103
Type:	RGS conduit
From:	Sta 4 + 85
To:	(E) Manhole-25
Total Fill (mm2):	2635.90
Remarks:	Connect new conduit to existing conduit. Add new cable (s) and pull rope thru the entire length of the connected conduits as listed below.
Allowable Fill (mm2):	3324.51
Description of Changes:	

Included Cable No.	Conductor Type	Area (mm2)
2095	1-3/C + Gnd, #2, 600 V, EPR insulation	527.18
2096	1-3/C + Gnd, #2, 600 V, EPR insulation	527.18
2097	1-3/C + Gnd, #2, 600 V, EPR insulation	527.18
2098	1-3/C + Gnd, #2, 600 V, EPR insulation	527.18
2099	1-3/C + Gnd, #2, 600 V, EPR insulation	527.18
Pull Rope	Soft-Fiber Polyester	0.00

Conduit/Tray No:	0533
Reference:	E-34, E-26, E-24
Size:	103
Type:	RGS conduit
From:	Sta 4 + 85
To:	(E) Manhole-26
Total Fill (mm2):	2780.99
Remarks:	Connect new conduit to existing conduit. Add new cable (s) and pull rope thru the entire length of the connected conduits as listed below.
Allowable Fill (mm2):	3324.51
Description of Changes:	

Included Cable No.	Conductor Type	Area (mm2)
2391	3-1/C #4/0, 15 KV, EPR insulation	2780.99
Pull Rope	Soft-Fiber Polyester	0.00

5 **REVISED PER ADDENDUM No. 5 DATED JULY 30, 2009**

CONDUIT AND TRAY SCHEDULE
UNDERGROUND

E-235

REVISED BY | DATE REVISED
CARMELO RIVERA | ELLERY LUCAS
CALCULATED-DESIGNED BY | CHECKED BY
CONSULTANT FUNCTIONAL SUPERVISOR
BEHZAD GOLEMOHAMMADI
STATE OF CALIFORNIA - DEPARTMENT OF TRANSPORTATION
Caltrans

LAST REVISION 00-00-00 | DATE PLOTTED => 28-JUL-2009 | TIME PLOTTED => 06:35

Dist	COUNTY	ROUTE	KILOMETER POST TOTAL PROJECT	SHEET No.	TOTAL SHEETS
04	SF	80	12.7/13.2	356	806

REGISTERED ELECTRICAL ENGINEER 2/14/08

6-23-08
PLANS APPROVAL DATE

REGISTERED PROFESSIONAL ENGINEER FADI WALIEDDINE No. 11465 Exp. 12/31/09 ELECTRICAL STATE OF CALIFORNIA

THE STATE OF CALIFORNIA OR ITS OFFICERS OR AGENTS SHALL NOT BE RESPONSIBLE FOR THE ACCURACY OR COMPLETENESS OF ELECTRONIC COPIES OF THIS PLAN SHEET.

PB AMERICAS, Inc.
A Parsons Brinckerhoff Company
303 Second St., Suite 700N
San Francisco, CA 94107-1317

Conduit/Tray No: 062 | Reference: E-13
Size: 78 | Type: RGS conduit
From: Stub-up below (E) T20 | To: (E) 480 V LVCC-A
Total Fill (mm2): 324.29 | Remarks: Existing conduit, add new cable (s) and pull rope as listed below.
Allowable Fill (mm2): 2564.19
Description of Changes:

Included Cable No.	Conductor Type	Area (mm2)
Pull Rope	Soft-Fiber Polyester	0.00
S-3056-1	1-3/C + Gnd, #6, 600 V, EPR insulation	324.29

Conduit/Tray No: 063 | Reference: E-13
Size: 78 | Type: RGS conduit
From: Stub-up below (E) T20 | To: (E) 480 V LVCC-A
Total Fill (mm2): 593.56 | Remarks: Existing conduit, add new cable (s) and pull rope as listed below.
Allowable Fill (mm2): 1499.81
Description of Changes:

Included Cable No.	Conductor Type	Area (mm2)
A-3006-1	1-3/C + Gnd, #4, 600 V, EPR insulation	366.10
A-3008-1	1-2/C + Gnd, #8, 600 V, EPR insulation	227.46
Pull Rope	Soft-Fiber Polyester	0.00

Conduit/Tray No: 064 | Reference: E-13
Size: 78 | Type: RGS conduit
From: Stub-up below (E) T20 | To: (E) 480 V LVCC-A
Total Fill (mm2): 1581.54 | Remarks: Existing conduit, add new cable (s) and pull rope as listed below.
Allowable Fill (mm2): 1935.24
Description of Changes:

Included Cable No.	Conductor Type	Area (mm2)
A-3009-1	1-3/C + Gnd, #2, 600 V, EPR insulation	527.18
A-3010-1	1-3/C + Gnd, #2, 600 V, EPR insulation	527.18
A-3011-1	1-3/C + Gnd, #2, 600 V, EPR insulation	527.18
Pull Rope	Soft-Fiber Polyester	0.00

Conduit/Tray No: 066 | Reference: E-13
Size: 78 | Type: RGS conduit
From: Stub-up below (E) T20 | To: (E) 480 V LVCC-A
Total Fill (mm2): 1054.36 | Remarks: Existing conduit, add new cable (s) and pull rope as listed below.
Allowable Fill (mm2): 1499.81
Description of Changes:

Included Cable No.	Conductor Type	Area (mm2)
A-3012-1	1-3/C + Gnd, #2, 600 V, EPR insulation	527.18
A-3013-1	1-3/C + Gnd, #2, 600 V, EPR insulation	527.18
Pull Rope	Soft-Fiber Polyester	0.00

5

~~Conduit/Tray No: 067 | Reference: E-13~~
~~Size: 78 | Type: RGS conduit~~
~~From: Stub-up below (E) T20 | To: (E) 480 V LVCC-A~~
~~Total Fill (mm2): 1098.30 | Remarks: Existing conduit, add new cable (s) and pull rope as listed below.~~
~~Allowable Fill (mm2): 1935.24~~
~~Description of Changes:~~

Included Cable No.	Conductor Type	Area (mm2)
Pull Rope	Soft-Fiber Polyester	0.00
S-3021-1	1-3/C + Gnd, #4, 600 V, EPR insulation	366.10
S-3022-1	1-3/C + Gnd, #4, 600 V, EPR insulation	366.10
S-3023-1	1-3/C + Gnd, #4, 600 V, EPR insulation	366.10

Conduit/Tray No: 080 | Reference: E-13
Size: 78 | Type: RGS conduit
From: Stub-up below (E) T31 | To: (E) 480 V LVCC-B
Total Fill (mm2): 527.18 | Remarks: Existing conduit, add new cable (s) and pull rope as listed below.
Allowable Fill (mm2): 1499.81
Description of Changes:

Included Cable No.	Conductor Type	Area (mm2)
2123-2	1-3/C + Gnd, #2, 600 V, EPR insulation	527.18
Pull Rope	Soft-Fiber Polyester	0.00

Conduit/Tray No: 081 | Reference: E-13
Size: 78 | Type: RGS conduit
From: Stub-up below (E) T21 | To: (E) 480 V LVCC-B
Total Fill (mm2): 527.18 | Remarks: Existing conduit, add new cable (s) and pull rope as listed below.
Allowable Fill (mm2): 2564.19
Description of Changes:

Included Cable No.	Conductor Type	Area (mm2)
2123-3	1-3/C + Gnd, #2, 600 V, EPR insulation	527.18
Pull Rope	Soft-Fiber Polyester	0.00

5 **REVISED PER ADDENDUM No. 5 DATED JULY 30, 2009**

CONDUIT AND TRAY SCHEDULE
UNDERGROUND

E-237

STATE OF CALIFORNIA - DEPARTMENT OF TRANSPORTATION
Caltrans

CONSULTANT FUNCTIONAL SUPERVISOR: BEHZAD GOLEMOHAMMADI
CALCULATED-DESIGNED BY: CARMELO RIVERA
CHECKED BY: ELLERY LUCAS
REVISED BY | DATE REVISED

LAST REVISION 00-00-00 | DATE PLOTTED => 28-JUL-2009 | TIME PLOTTED => 06:36

Dist	COUNTY	ROUTE	KILOMETER POST TOTAL PROJECT	SHEET No.	TOTAL SHEETS
04	SF	80	12.7/13.2	357	806

REGISTERED ELECTRICAL ENGINEER 2/14/08

6-23-08
PLANS APPROVAL DATE

REGISTERED PROFESSIONAL ENGINEER FADI WALIEDDINE No. 11465 Exp. 12/31/09 ELECTRICAL STATE OF CALIFORNIA

THE STATE OF CALIFORNIA OR ITS OFFICERS OR AGENTS SHALL NOT BE RESPONSIBLE FOR THE ACCURACY OR COMPLETENESS OF ELECTRONIC COPIES OF THIS PLAN SHEET.

PB AMERICAS, Inc.
A Parsons Brinckerhoff Company
303 Second St., Suite 700N
San Francisco, CA 94107-1317

Caltrans Metric

Conduit/Tray No:	083
Reference:	E-13
Size:	78
Type:	RGS conduit
From:	Stub-up below (E) T21
To:	(E) 480 V LVCC-B
Total Fill (mm2):	1625.48
Remarks:	Existing conduit, add new cable (s) and pull rope as listed below.
Allowable Fill (mm2):	1935.24
Description of Changes:	

Included Cable No.	Conductor Type	Area (mm2)
2091	1-3/C + Gnd, #4, 600 V, EPR insulation	366.10
2092	1-3/C + Gnd, #4, 600 V, EPR insulation	366.10
2093	1-3/C + Gnd, #4, 600 V, EPR insulation	366.10
2094	1-3/C + Gnd, #2, 600 V, EPR insulation	527.18
Pull Rope	Soft-Fiber Polyester	0.00

Conduit/Tray No:	089
Reference:	E-13
Size:	78
Type:	RGS conduit
From:	Stub-up below (E) T21
To:	(E) 480 V LVCC-B
Total Fill (mm2):	1581.54
Remarks:	Existing conduit, add new cable (s) and pull rope as listed below.
Allowable Fill (mm2):	1935.24
Description of Changes:	

Included Cable No.	Conductor Type	Area (mm2)
2095	1-3/C + Gnd, #2, 600 V, EPR insulation	527.18
2096	1-3/C + Gnd, #2, 600 V, EPR insulation	527.18
2097	1-3/C + Gnd, #2, 600 V, EPR insulation	527.18
Pull Rope	Soft-Fiber Polyester	0.00

Conduit/Tray No:	090
Reference:	E-13
Size:	103
Type:	RGS conduit
From:	Stub-up below (E) T31
To:	(E) 480 V LVCC-B
Total Fill (mm2):	648.58
Remarks:	Existing conduit, add new cable (s) and pull rope as listed below.
Allowable Fill (mm2):	2576.49
Description of Changes:	

Included Cable No.	Conductor Type	Area (mm2)
Pull Rope	Soft-Fiber Polyester	0.00
S-2041-1	1-3/C + Gnd, #6, 600 V, EPR insulation	324.29
S-2042-1	1-3/C + Gnd, #6, 600 V, EPR insulation	324.29

Conduit/Tray No:	093
Reference:	E-13
Size:	78
Type:	RGS conduit
From:	Stub-up below (E) T31
To:	(E) 480 V LVCC-B
Total Fill (mm2):	1420.46
Remarks:	Existing conduit, add new cable (s) and pull rope as listed below.
Allowable Fill (mm2):	1935.24
Description of Changes:	

Included Cable No.	Conductor Type	Area (mm2)
2098	1-3/C + Gnd, #2, 600 V, EPR insulation	527.18
2099	1-3/C + Gnd, #2, 600 V, EPR insulation	527.18
2100	1-3/C + Gnd, #4, 600 V, EPR insulation	366.10
Pull Rope	Soft-Fiber Polyester	0.00

5

Conduit/Tray No:	094
Reference:	E-13
Size:	78
Type:	RGS conduit
From:	Stub-up below (E) T31
To:	(E) 480 V LVCC-B
Total Fill (mm2):	1277.36
Remarks:	Existing conduit, add new cable (s) and pull rope as listed below.
Allowable Fill (mm2):	1935.24
Description of Changes:	

Included Cable No.	Conductor Type	Area (mm2)
A-2005-1	1-3/C + Gnd, #8, 600 V, EPR insulation	262.68
A-2007-1	1-3/C + Gnd, #6, 600 V, EPR insulation	324.29
A-2008-1	1-3/C + Gnd, #4, 600 V, EPR insulation	366.10
A-2009-1	1-3/C + Gnd, #6, 600 V, EPR insulation	324.29
Pull Rope	Soft-Fiber Polyester	0.00

Conduit/Tray No:	097
Reference:	E-13
Size:	78
Type:	RGS conduit
From:	Stub-up below (E) T31
To:	(E) 480 V LVCC-B
Total Fill (mm2):	1259.38
Remarks:	Existing conduit, add new cable (s) and pull rope as listed below.
Allowable Fill (mm2):	1935.24
Description of Changes:	

Included Cable No.	Conductor Type	Area (mm2)
2101	1-3/C + Gnd, #4, 600 V, EPR insulation	366.10
2102	1-3/C + Gnd, #4, 600 V, EPR insulation	366.10
2103	1-3/C + Gnd, #2, 600 V, EPR insulation	527.18
Pull Rope	Soft-Fiber Polyester	0.00

Conduit/Tray No:	098
Reference:	E-13
Size:	78
Type:	RGS conduit
From:	Stub-up below (E) T31
To:	(E) 480 V LVCC-B
Total Fill (mm2):	525.36
Remarks:	Existing conduit, add new cable (s) and pull rope as listed below.
Allowable Fill (mm2):	1499.81
Description of Changes:	

Included Cable No.	Conductor Type	Area (mm2)
Pull Rope	Soft-Fiber Polyester	0.00
S-2021-1	1-3/C + Gnd, #8, 600 V, EPR insulation	262.68
S-2022-1	1-3/C + Gnd, #8, 600 V, EPR insulation	262.68

5 **REVISED PER ADDENDUM No. 5 DATED JULY 30, 2009**

CONDUIT AND TRAY SCHEDULE
UNDERGROUND

E-238

REVISED BY | DATE REVISED
CARMELO RIVERA | ELLERY LUCAS
CALCULATED-DESIGNED BY | CHECKED BY
CONSULTANT FUNCTIONAL SUPERVISOR: BEHZAD GOLEMOHAMMADI
STATE OF CALIFORNIA - DEPARTMENT OF TRANSPORTATION
Caltrans

LAST REVISION 00-00-00 | DATE PLOTTED => 28-JUL-2009 | TIME PLOTTED => 06:36

Dist	COUNTY	ROUTE	KILOMETER POST TOTAL PROJECT	SHEET No.	TOTAL SHEETS
04	SF	80	12.7/13.2	359	806

Caltrans Metric

2/14/08
REGISTERED ELECTRICAL ENGINEER

6-23-08
PLANS APPROVAL DATE

REGISTERED PROFESSIONAL ENGINEER
FADI WALIEDDINE
No. 11465
Exp. 12/31/09
ELECTRICAL
STATE OF CALIFORNIA

THE STATE OF CALIFORNIA OR ITS OFFICERS OR AGENTS SHALL NOT BE RESPONSIBLE FOR THE ACCURACY OR COMPLETENESS OF ELECTRONIC COPIES OF THIS PLAN SHEET.

PB AMERICAS, Inc.
A Parsons Brinckerhoff Company
303 Second St., Suite 700N
San Francisco, CA 94107-1317

Conduit/Tray No:	116
Reference:	E-13
Size:	78
Type:	RGS conduit
From:	Stub-up below (E) T31
To:	(E) 480 V LVCC-B
Total Fill (mm2):	1054.36
Remarks:	Existing conduit, add new cable (s) and pull rope as listed below.
Allowable Fill (mm2):	1499.81
Description of Changes:	

Included Cable No.	Conductor Type	Area (mm2)
A-3041-1	1-3/C + Gnd, #2, 600 V, EPR insulation	527.18
A-3057-1	1-3/C + Gnd, #2, 600 V, EPR insulation	527.18
Pull Rope	Soft-Fiber Polyester	0.00

Conduit/Tray No:	117
Reference:	E-13
Size:	78
Type:	RGS conduit
From:	Stub-up below (E) T31
To:	(E) 480 V LVCC-B
Total Fill (mm2):	1420.46
Remarks:	Existing conduit, add new cable (s) and pull rope as listed below.
Allowable Fill (mm2):	1935.24
Description of Changes:	

Included Cable No.	Conductor Type	Area (mm2)
A-3036-1	1-3/C + Gnd, #4, 600 V, EPR insulation	366.10
A-3039-1	1-3/C + Gnd, #2, 600 V, EPR insulation	527.18
A-3040-1	1-3/C + Gnd, #2, 600 V, EPR insulation	527.18
Pull Rope	Soft-Fiber Polyester	0.00

Conduit/Tray No:	119
Reference:	E-13
Size:	78
Type:	RGS conduit
From:	Stub-up below (E) T31
To:	(E) 480 V LVCC-B
Total Fill (mm2):	1581.54
Remarks:	Existing conduit, add new cable (s) and pull rope as listed below.
Allowable Fill (mm2):	1935.24
Description of Changes:	

Included Cable No.	Conductor Type	Area (mm2)
A-3042-1	1-3/C + Gnd, #2, 600 V, EPR insulation	527.18
A-3043-1	1-3/C + Gnd, #2, 600 V, EPR insulation	527.18
Pull Rope	Soft-Fiber Polyester	0.00
S-3052-1	1-3/C + Gnd, #2, 600 V, EPR insulation	527.18

Conduit/Tray No:	121
Reference:	E-13
Size:	78
Type:	RGS conduit
From:	Stub-up below (E) T31
To:	(E) 480 V LVCC-B
Total Fill (mm2):	732.20
Remarks:	Existing conduit, add new cable (s) and pull rope as listed below.
Allowable Fill (mm2):	1499.81
Description of Changes:	

Included Cable No.	Conductor Type	Area (mm2)
Pull Rope	Soft-Fiber Polyester	0.00
S-3051-1	1-3/C + Gnd, #4, 600 V, EPR insulation	366.10
S-3053-1	1-3/C + Gnd, #4, 600 V, EPR insulation	366.10

5

Conduit/Tray No:	178
Reference:	E-13
Size:	78
Type:	RGS conduit
From:	(E) T40
To:	(E) Telephone Terminal Box TEL-YBI
Total Fill (mm2):	1201.71
Remarks:	Existing conduit, add new cable (s) and pull rope as listed below.
Allowable Fill (mm2):	2564.19
Description of Changes:	

Included Cable No.	Conductor Type	Area (mm2)
2473-1	50 pair #18, shielded pairs, IS/OS shield 600 V, XLPE insul., PVC jacket	1201.71
Pull Rope	Soft-Fiber Polyester	0.00

Conduit/Tray No:	179
Reference:	E-13
Size:	78
Type:	RGS conduit
From:	(E) T40
To:	(E) Telephone Terminal Box TEL-YBI
Total Fill (mm2):	1201.71
Remarks:	Existing conduit, add new cable (s) and pull rope as listed below.
Allowable Fill (mm2):	2564.19
Description of Changes:	

Included Cable No.	Conductor Type	Area (mm2)
1473-1	50 pair #18, shielded pairs, IS/OS shield 600 V, XLPE insul., PVC jacket	1201.71
Pull Rope	Soft-Fiber Polyester	0.00

5 **REVISED PER ADDENDUM No. 5 DATED JULY 30, 2009**

CONDUIT AND TRAY SCHEDULE
UNDERGROUND

E-240

REVISED BY | DATE REVISED
CARMELO RIVERA | ELLERY LUCAS
CALCULATED-DESIGNED BY | CHECKED BY
CONSULTANT FUNCTIONAL SUPERVISOR
BEHZAD GOLEMOHAMMADI

STATE OF CALIFORNIA - DEPARTMENT OF TRANSPORTATION
Caltrans

LAST REVISION 00-00-00 | DATE PLOTTED => 28-JUL-2009 | TIME PLOTTED => 06:36

Dist	COUNTY	ROUTE	KILOMETER POST TOTAL PROJECT	SHEET No.	TOTAL SHEETS
04	SF	80	12.7/13.2	361	806

REGISTERED ELECTRICAL ENGINEER 2/14/08

6-23-08
PLANS APPROVAL DATE

REGISTERED PROFESSIONAL ENGINEER FADI WALIEDDINE No. 11465 Exp. 12/31/09 ELECTRICAL STATE OF CALIFORNIA

THE STATE OF CALIFORNIA OR ITS OFFICERS OR AGENTS SHALL NOT BE RESPONSIBLE FOR THE ACCURACY OR COMPLETENESS OF ELECTRONIC COPIES OF THIS PLAN SHEET.

PB AMERICAS, Inc.
A Parsons Brinckerhoff Company
303 Second St., Suite 700N
San Francisco, CA 94107-1317

Caltrans Metric

5

Conduit/Tray No:	T20
Size:	910
From:	(E) 600 V Pull Box
Total Fill (mm2):	21972.69
Allowable Fill (mm2):	25161.24
Reference:	E-13, E-46
Type:	6" siderail ladder tray
To:	(E) T21
Remarks:	Existing tray, add new cable (s) as listed below.
Description of Changes:	

Included Cable No.	Conductor Type	Area (mm2)
1091	1-3/C + Gnd, #6, 600 V, EPR insulation	324.29
1092	1-3/C + Gnd, #4, 600 V, EPR insulation	366.10
1093	1-3/C + Gnd, #4, 600 V, EPR insulation	366.10
1094	1-3/C + Gnd, #2, 600 V, EPR insulation	527.18
1095	1-3/C + Gnd, #2, 600 V, EPR insulation	527.18
1096	1-3/C + Gnd, #2, 600 V, EPR insulation	527.18
1097	1-3/C + Gnd, #2, 600 V, EPR insulation	527.18
1098	1-3/C + Gnd, #2, 600 V, EPR insulation	527.18
1099	1-3/C + Gnd, #2, 600 V, EPR insulation	527.18
1105	1-3/C + Gnd, #6, 600 V, EPR insulation	324.29
1106	1-3/C + Gnd, #6, 600 V, EPR insulation	324.29
2091	1-3/C + Gnd, #4, 600 V, EPR insulation	366.10
2092	1-3/C + Gnd, #4, 600 V, EPR insulation	366.10
2093	1-3/C + Gnd, #4, 600 V, EPR insulation	366.10
2094	1-3/C + Gnd, #2, 600 V, EPR insulation	527.18
2095	1-3/C + Gnd, #2, 600 V, EPR insulation	527.18
2096	1-3/C + Gnd, #2, 600 V, EPR insulation	527.18
2097	1-3/C + Gnd, #2, 600 V, EPR insulation	527.18
2123-3	1-3/C + Gnd, #2, 600 V, EPR insulation	527.18
A-1005-1	1-3/C + Gnd, #8, 600 V, EPR insulation	262.68
A-1006-1	1-3/C + Gnd, #8, 600 V, EPR insulation	262.68
A-1007-1	1-3/C + Gnd, #4, 600 V, EPR insulation	366.10
A-1008-1	1-3/C + Gnd, #6, 600 V, EPR insulation	324.29
A-1009-1	1-3/C + Gnd, #6, 600 V, EPR insulation	324.29
A-1011-1	1-3/C + Gnd, #2, 600 V, EPR insulation	527.18
A-1012-1	1-3/C + Gnd, #2, 600 V, EPR insulation	527.18
A-1013-1	1-3/C + Gnd, #2, 600 V, EPR insulation	527.18
A-1014-1	1-3/C + Gnd, #2, 600 V, EPR insulation	527.18
A-1035-1	1-3/C + Gnd, #6, 600 V, EPR insulation	324.29
A-3001-1	1-3/C + Gnd, #4, 600 V, EPR insulation	366.10
A-3002-1	1-3/C + Gnd, #4, 600 V, EPR insulation	366.10
A-3003-1	1-3/C + Gnd, #4, 600 V, EPR insulation	366.10
A-3004-1	1-3/C + Gnd, #2, 600 V, EPR insulation	527.18
A-3005-1	1-3/C + Gnd, #2, 600 V, EPR insulation	527.18
A-3006-1	1-3/C + Gnd, #4, 600 V, EPR insulation	366.10
A-3008-1	1-2/C + Gnd, #8, 600 V, EPR insulation	227.46
A-3009-1	1-3/C + Gnd, #2, 600 V, EPR insulation	527.18
A-3010-1	1-3/C + Gnd, #2, 600 V, EPR insulation	527.18
A-3011-1	1-3/C + Gnd, #2, 600 V, EPR insulation	527.18
A-3012-1	1-3/C + Gnd, #2, 600 V, EPR insulation	527.18
A-3013-1	1-3/C + Gnd, #2, 600 V, EPR insulation	527.18
S-1001-1	1-3/C + Gnd, #8, 600 V, EPR insulation	262.68
S-1002-1	1-3/C + Gnd, #8, 600 V, EPR insulation	262.68
S-1021-1	1-3/C + Gnd, #8, 600 V, EPR insulation	262.68
S-1022-1	1-3/C + Gnd, #8, 600 V, EPR insulation	262.68
S-1023-1	1-3/C + Gnd, #6, 600 V, EPR insulation	324.29
S-1024-1	1-3/C + Gnd, #6, 600 V, EPR insulation	324.29
S-1031-1	1-3/C + Gnd, #2, 600 V, EPR insulation	527.18
S-1032-1	1-3/C + Gnd, #4, 600 V, EPR insulation	366.10
S-3021-1	1-3/C + Gnd, #4, 600 V, EPR insulation	366.10
S-3022-1	1-3/C + Gnd, #4, 600 V, EPR insulation	366.10
S-3023-1	1-3/C + Gnd, #4, 600 V, EPR insulation	366.10
S-3056-1	1-3/C + Gnd, #6, 600 V, EPR insulation	324.29

Conduit/Tray No:	T21
Size:	910
From:	(E) T20
Total Fill (mm2):	3734.20
Allowable Fill (mm2):	25161.24
Reference:	E-13, E-46
Type:	6" siderail ladder tray
To:	(E) T24/T22
Remarks:	Existing tray, add new cable (s) as listed below.
Description of Changes:	

Included Cable No.	Conductor Type	Area (mm2)
2091	1-3/C + Gnd, #4, 600 V, EPR insulation	366.10
2092	1-3/C + Gnd, #4, 600 V, EPR insulation	366.10
2093	1-3/C + Gnd, #4, 600 V, EPR insulation	366.10
2094	1-3/C + Gnd, #2, 600 V, EPR insulation	527.18
2095	1-3/C + Gnd, #2, 600 V, EPR insulation	527.18
2096	1-3/C + Gnd, #2, 600 V, EPR insulation	527.18
2097	1-3/C + Gnd, #2, 600 V, EPR insulation	527.18
2123-3	1-3/C + Gnd, #2, 600 V, EPR insulation	527.18

5 **REVISED PER ADDENDUM No. 5 DATED JULY 30, 2009**

CONDUIT AND TRAY SCHEDULE
UNDERGROUND

E-242

STATE OF CALIFORNIA - DEPARTMENT OF TRANSPORTATION
Caltrans

CONSULTANT FUNCTIONAL SUPERVISOR: BEHZAD GOLEMOHAMMADI
CALCULATED-DESIGNED BY: CARMELO RIVERA
CHECKED BY: ELLERY LUCAS
REVISED BY / DATE REVISED

LAST REVISION 00-00-00
DATE PLOTTED => 28-JUL-2009
TIME PLOTTED => 06:36

Dist	COUNTY	ROUTE	KILOMETER POST TOTAL PROJECT	SHEET No.	TOTAL SHEETS
04	SF	80	12.7/13.2	362	806

Caltrans Metric

2/14/08
REGISTERED ELECTRICAL ENGINEER

6-23-08
PLANS APPROVAL DATE

REGISTERED PROFESSIONAL ENGINEER
FADI WALIEDDINE
No. 11465
Exp. 12/31/09
ELECTRICAL
STATE OF CALIFORNIA

THE STATE OF CALIFORNIA OR ITS OFFICERS OR AGENTS SHALL NOT BE RESPONSIBLE FOR THE ACCURACY OR COMPLETENESS OF ELECTRONIC COPIES OF THIS PLAN SHEET.

PB AMERICAS, Inc.
A Parsons Brinckerhoff Company
303 Second St., Suite 700N
San Francisco, CA 94107-1317

Conduit/Tray No:	T30
Size:	910
From:	(E) 600 V Pull Box
Total Fill (mm2):	18683.13
Allowable Fill (mm2):	25161.24
Reference:	E-13, E-46
Type:	6" siderail ladder tray
To:	(E) T31
Remarks:	Existing tray, add new cable (s) as listed below.
Description of Changes:	

5

Included Cable No.	Conductor Type	Area (mm2)
2098	1-3/C + Gnd, #2, 600 V, EPR insulation	527.18
2099	1-3/C + Gnd, #2, 600 V, EPR insulation	527.18
2100	1-3/C + Gnd, #4, 600 V, EPR insulation	366.10
2101	1-3/C + Gnd, #4, 600 V, EPR insulation	366.10
2102	1-3/C + Gnd, #4, 600 V, EPR insulation	366.10
2103	1-3/C + Gnd, #2, 600 V, EPR insulation	527.18
2104	1-3/C + Gnd, #2, 600 V, EPR insulation	527.18
2105	1-3/C + Gnd, #2, 600 V, EPR insulation	527.18
2106	1-3/C + Gnd, #2, 600 V, EPR insulation	527.18
2107	1-3/C + Gnd, #2, 600 V, EPR insulation	527.18
2123-2	1-3/C + Gnd, #2, 600 V, EPR insulation	527.18
A-2005-1	1-3/C + Gnd, #8, 600 V, EPR insulation	262.68
A-2007-1	1-3/C + Gnd, #6, 600 V, EPR insulation	324.29
A-2008-1	1-3/C + Gnd, #4, 600 V, EPR insulation	366.10
A-2009-1	1-3/C + Gnd, #6, 600 V, EPR insulation	324.29
A-2011-1	1-3/C + Gnd, #2, 600 V, EPR insulation	527.18
A-2012-1	1-3/C + Gnd, #2, 600 V, EPR insulation	527.18
A-2013-1	1-3/C + Gnd, #2, 600 V, EPR insulation	527.18
A-2014-1	1-3/C + Gnd, #2, 600 V, EPR insulation	527.18
A-2035-1	1-3/C + Gnd, #6, 600 V, EPR insulation	324.29
A-3031-1	1-3/C + Gnd, #4, 600 V, EPR insulation	366.10
A-3032-1	1-3/C + Gnd, #4, 600 V, EPR insulation	366.10
A-3033-1	1-3/C + Gnd, #2, 600 V, EPR insulation	527.18
A-3034-1	1-3/C + Gnd, #2, 600 V, EPR insulation	527.18
A-3035-1	1-3/C + Gnd, #4, 600 V, EPR insulation	366.10
A-3036-1	1-3/C + Gnd, #4, 600 V, EPR insulation	366.10
A-3039-1	1-3/C + Gnd, #2, 600 V, EPR insulation	527.18
A-3040-1	1-3/C + Gnd, #2, 600 V, EPR insulation	527.18
A-3041-1	1-3/C + Gnd, #2, 600 V, EPR insulation	527.18
A-3042-1	1-3/C + Gnd, #2, 600 V, EPR insulation	527.18
A-3043-1	1-3/C + Gnd, #2, 600 V, EPR insulation	527.18
A-3057-1	1-3/C + Gnd, #2, 600 V, EPR insulation	527.18
S-2021-1	1-3/C + Gnd, #8, 600 V, EPR insulation	262.68
S-2022-1	1-3/C + Gnd, #8, 600 V, EPR insulation	262.68
S-2023-1	1-3/C + Gnd, #6, 600 V, EPR insulation	324.29
S-2024-1	1-3/C + Gnd, #6, 600 V, EPR insulation	324.29
S-2031-1	1-3/C + Gnd, #2, 600 V, EPR insulation	527.18
S-2032-1	1-3/C + Gnd, #4, 600 V, EPR insulation	366.10
S-2041-1	1-3/C + Gnd, #6, 600 V, EPR insulation	324.29
S-2042-1	1-3/C + Gnd, #6, 600 V, EPR insulation	324.29
S-3051-1	1-3/C + Gnd, #4, 600 V, EPR insulation	366.10
S-3052-1	1-3/C + Gnd, #2, 600 V, EPR insulation	527.18
S-3053-1	1-3/C + Gnd, #4, 600 V, EPR insulation	366.10

5 **REVISED PER ADDENDUM No. 5 DATED JULY 30, 2009**

CONDUIT AND TRAY SCHEDULE
UNDERGROUND

E-243

REVISED BY | DATE REVISED
CARMELO RIVERA | ELLERY LUCAS
CALCULATED-DESIGNED BY | CHECKED BY
CONSULTANT FUNCTIONAL SUPERVISOR
BEHZAD GOLEMOHAMMADI
STATE OF CALIFORNIA - DEPARTMENT OF TRANSPORTATION
Caltrans

LAST REVISION 00-00-00 | DATE PLOTTED => 28-JUL-2009 | TIME PLOTTED => 06:37

Dist	COUNTY	ROUTE	KILOMETER POST TOTAL PROJECT	SHEET No.	TOTAL SHEETS
04	SF	80	12.7/13.2	363A	806

Caltrans Metric

5

4/10/09
REGISTERED ELECTRICAL ENGINEER

6-23-08
PLANS APPROVAL DATE

REGISTERED PROFESSIONAL ENGINEER FADI WALIEDDINE No. 11465 Exp. 12/31/09 ELECTRICAL STATE OF CALIFORNIA

THE STATE OF CALIFORNIA OR ITS OFFICERS OR AGENTS SHALL NOT BE RESPONSIBLE FOR THE ACCURACY OR COMPLETENESS OF ELECTRONIC COPIES OF THIS PLAN SHEET.

PB AMERICAS, Inc.
A Parsons Brinckerhoff Company
303 Second St., Suite 700N
San Francisco, CA 94107-1317

Conduit/Tray No: *0080 | Reference: E-30, E-32, E-16
Size: 103 | Type: RGS conduit
From: (E) 600 V Pull Box | To: 0080
Total Fill (mm2): 2313.74 | Remarks: Existing conduit, add new cable (s) and pull rope thru the entire length of the connected conduits as listed below.
Allowable Fill (mm2): 3324.51
Description of Changes:

Included Cable No.	Conductor Type	Area (mm2)
Pull Rope	Soft-Fiber Polyester	0.00
S-2031-1	1-3/C + Gnd, #2, 600 V, EPR insulation	527.18
S-2032-1	1-3/C + Gnd, #4, 600 V, EPR insulation	366.10
S-3051-1	1-3/C + Gnd, #4, 600 V, EPR insulation	366.10
S-3052-1	1-3/C + Gnd, #2, 600 V, EPR insulation	527.18
S-3053-1	1-3/C + Gnd, #2, 600 V, EPR insulation	527.18

Conduit/Tray No: *0354 | Reference: E-20, E-33
Size: 103 | Type: RGS conduit
From: Sta 1 + 63 | To: (E) Manhole-16
Total Fill (mm2): 2541.20 | Remarks: Existing conduit, add new cable (s) and pull rope thru the entire length of the connected conduits as listed below.
Allowable Fill (mm2): 3324.51
Description of Changes:

Included Cable No.	Conductor Type	Area (mm2)
A-3008-1	1-2/C + Gnd, #8, 600 V, EPR insulation	227.46
A-3009-1	1-3/C + Gnd, #2, 600 V, EPR insulation	527.18
A-3010-1	1-3/C + Gnd, #2, 600 V, EPR insulation	527.18
Pull Rope	Soft-Fiber Polyester	0.00
S-3021-1	1-3/C + Gnd, #4, 600 V, EPR insulation	366.10
S-3022-1	1-3/C + Gnd, #2, 600 V, EPR insulation	527.18
S-3023-1	1-3/C + Gnd, #4, 600 V, EPR insulation	366.10

Conduit/Tray No: *0356 | Reference: E-20, E-33
Size: 103 | Type: RGS conduit
From: Sta 1 + 63 | To: (E) Manhole-16
Total Fill (mm2): 2554.41 | Remarks: Existing conduit, add new cable (s) and pull rope thru the entire length of the connected conduits as listed below.
Allowable Fill (mm2): 3324.51
Description of Changes:

Included Cable No.	Conductor Type	Area (mm2)
1106	1-3/C + Gnd, #6, 600 V, EPR insulation	324.29
A-1035-1	1-3/C + Gnd, #6, 600 V, EPR insulation	324.29
A-3011-1	1-3/C + Gnd, #2, 600 V, EPR insulation	527.18
A-3012-1	1-3/C + Gnd, #2, 600 V, EPR insulation	527.18
A-3013-1	1-3/C + Gnd, #2, 600 V, EPR insulation	527.18
Pull Rope	Soft-Fiber Polyester	0.00
S-3056-1	1-3/C + Gnd, #6, 600 V, EPR insulation	324.29

Conduit/Tray No: *0360 | Reference: E-21, E-33
Size: 103 | Type: RGS conduit
From: Sta 1 + 63 | To: (E) Manhole-18
Total Fill (mm2): 970.95 | Remarks: Existing conduit, add new cable (s) and pull rope thru the entire length of the connected conduits as listed below.
Allowable Fill (mm2): 3324.51
Description of Changes:

Included Cable No.	Conductor Type	Area (mm2)
1475-3	72 Fiber, single mode fiber optic riser cable	323.65
1477-1	72 Fiber, single mode fiber optic riser cable	323.65
2475-4	72 Fiber, single mode fiber optic riser cable	323.65
Pull Rope	Soft-Fiber Polyester	0.00

Conduit/Tray No: *0378 | Reference: E-20, E-33
Size: 103 | Type: RGS conduit
From: Sta 1 + 63 | To: (E) Manhole-16
Total Fill (mm2): 2313.74 | Remarks: Existing conduit, add new cable (s) and pull rope thru the entire length of the connected conduits as listed below.
Allowable Fill (mm2): 3324.51
Description of Changes:

Included Cable No.	Conductor Type	Area (mm2)
Pull Rope	Soft-Fiber Polyester	0.00
S-2031-1	1-3/C + Gnd, #2, 600 V, EPR insulation	527.18
S-2032-1	1-3/C + Gnd, #4, 600 V, EPR insulation	366.10
S-3051-1	1-3/C + Gnd, #4, 600 V, EPR insulation	366.10
S-3052-1	1-3/C + Gnd, #2, 600 V, EPR insulation	527.18
S-3053-1	1-3/C + Gnd, #2, 600 V, EPR insulation	527.18

5 **ADDED PER ADDENDUM No. 5 DATED JULY 30, 2009**

CONDUIT AND TRAY SCHEDULE
UNDERGROUND

E-244A

REVISED BY | DATE REVISED
JEFFRI HALIM | ELLERY LUCAS
CALCULATED-DESIGNED BY | CHECKED BY
CONSULTANT FUNCTIONAL SUPERVISOR
BEHZAD GOLEMOHAMMADI
STATE OF CALIFORNIA - DEPARTMENT OF TRANSPORTATION
Caltrans

LAST REVISION 00-00-00 | DATE PLOTTED => 28-JUL-2009 | TIME PLOTTED => 06:37

Dist	COUNTY	ROUTE	KILOMETER POST TOTAL PROJECT	SHEET No.	TOTAL SHEETS
04	SF	80	12.7/13.2	363	806

Caltrans Metric

2/14/08
REGISTERED ELECTRICAL ENGINEER

6-23-08
PLANS APPROVAL DATE

REGISTERED PROFESSIONAL ENGINEER FADI WALIEDDINE No. 11465 Exp. 12/31/09 ELECTRICAL STATE OF CALIFORNIA

THE STATE OF CALIFORNIA OR ITS OFFICERS OR AGENTS SHALL NOT BE RESPONSIBLE FOR THE ACCURACY OR COMPLETENESS OF ELECTRONIC COPIES OF THIS PLAN SHEET.

PB AMERICAS, Inc.
A Parsons Brinckerhoff Company
303 Second St., Suite 700N
San Francisco, CA 94107-1317

5

Conduit/Tray No: T31 | Reference: E-13, E-46
Size: 910 | Type: 6" siderail ladder tray
From: (E) T30 | To: (E) T32
Total Fill (mm2): 18683.13 | Remarks: Existing tray, add new cable (s) as listed below.
Allowable Fill (mm2): 25161.24
Description of Changes:

Included Cable No.	Conductor Type	Area (mm2)
2098	1-3/C + Gnd, #2, 600 V, EPR insulation	527.18
2099	1-3/C + Gnd, #2, 600 V, EPR insulation	527.18
2100	1-3/C + Gnd, #4, 600 V, EPR insulation	366.10
2101	1-3/C + Gnd, #4, 600 V, EPR insulation	366.10
2102	1-3/C + Gnd, #4, 600 V, EPR insulation	366.10
2103	1-3/C + Gnd, #2, 600 V, EPR insulation	527.18
2104	1-3/C + Gnd, #2, 600 V, EPR insulation	527.18
2105	1-3/C + Gnd, #2, 600 V, EPR insulation	527.18
2106	1-3/C + Gnd, #2, 600 V, EPR insulation	527.18
2107	1-3/C + Gnd, #2, 600 V, EPR insulation	527.18
2123-2	1-3/C + Gnd, #2, 600 V, EPR insulation	527.18
A-2005-1	1-3/C + Gnd, #8, 600 V, EPR insulation	262.68
A-2007-1	1-3/C + Gnd, #6, 600 V, EPR insulation	324.29
A-2008-1	1-3/C + Gnd, #4, 600 V, EPR insulation	366.10
A-2009-1	1-3/C + Gnd, #6, 600 V, EPR insulation	324.29
A-2011-1	1-3/C + Gnd, #2, 600 V, EPR insulation	527.18
A-2012-1	1-3/C + Gnd, #2, 600 V, EPR insulation	527.18
A-2013-1	1-3/C + Gnd, #2, 600 V, EPR insulation	527.18
A-2014-1	1-3/C + Gnd, #2, 600 V, EPR insulation	527.18
A-2035-1	1-3/C + Gnd, #6, 600 V, EPR insulation	324.29
A-3031-1	1-3/C + Gnd, #4, 600 V, EPR insulation	366.10
A-3032-1	1-3/C + Gnd, #4, 600 V, EPR insulation	366.10
A-3033-1	1-3/C + Gnd, #2, 600 V, EPR insulation	527.18
A-3034-1	1-3/C + Gnd, #2, 600 V, EPR insulation	527.18
A-3035-1	1-3/C + Gnd, #4, 600 V, EPR insulation	366.10
A-3036-1	1-3/C + Gnd, #4, 600 V, EPR insulation	366.10
A-3039-1	1-3/C + Gnd, #2, 600 V, EPR insulation	527.18
A-3040-1	1-3/C + Gnd, #2, 600 V, EPR insulation	527.18
A-3041-1	1-3/C + Gnd, #2, 600 V, EPR insulation	527.18
A-3042-1	1-3/C + Gnd, #2, 600 V, EPR insulation	527.18
A-3043-1	1-3/C + Gnd, #2, 600 V, EPR insulation	527.18
A-3057-1	1-3/C + Gnd, #2, 600 V, EPR insulation	527.18
S-2021-1	1-3/C + Gnd, #8, 600 V, EPR insulation	262.68
S-2022-1	1-3/C + Gnd, #8, 600 V, EPR insulation	262.68
S-2023-1	1-3/C + Gnd, #6, 600 V, EPR insulation	324.29
S-2024-1	1-3/C + Gnd, #6, 600 V, EPR insulation	324.29
S-2031-1	1-3/C + Gnd, #2, 600 V, EPR insulation	527.18
S-2032-1	1-3/C + Gnd, #4, 600 V, EPR insulation	366.10
S-2041-1	1-3/C + Gnd, #6, 600 V, EPR insulation	324.29
S-2042-1	1-3/C + Gnd, #6, 600 V, EPR insulation	324.29
S-3051-1	1-3/C + Gnd, #4, 600 V, EPR insulation	366.10
S-3052-1	1-3/C + Gnd, #2, 600 V, EPR insulation	527.18
S-3053-1	1-3/C + Gnd, #4, 600 V, EPR insulation	366.10

Conduit/Tray No: T32 | Reference: E-13, E-46
Size: 610 | Type: 6" siderail ladder tray
From: (E) T31 | To: (E) T33/T34
Total Fill (mm2): 102.61 | Remarks: Existing tray, add new cable (s) as listed below.
Allowable Fill (mm2): 18064.48
Description of Changes:

Included Cable No.	Conductor Type	Area (mm2)
LPA-36	1-2/C + Gnd, #12, 600 V, EPR insulation	102.61

Conduit/Tray No: T34 | Reference: E-13, E-46, E-47
Size: 610 | Type: 6" siderail ladder tray
From: Above RTU's/T35 | To: (E) T32/T33
Total Fill (mm2): 102.61 | Remarks: Existing tray, add new cable (s) as listed below.
Allowable Fill (mm2): 18064.48
Description of Changes:

Included Cable No.	Conductor Type	Area (mm2)
LPA-36	1-2/C + Gnd, #12, 600 V, EPR insulation	102.61

Conduit/Tray No: T35 | Reference: E-13, E-46, E-47
Size: 610 | Type: 6" siderail ladder tray
From: (E) T34 | To: Above RTU/SCADA Cabinets
Total Fill (mm2): 102.61 | Remarks: Existing tray, add new cable (s) as listed below.
Allowable Fill (mm2): 18064.48
Description of Changes:

Included Cable No.	Conductor Type	Area (mm2)
LPA-36	1-2/C + Gnd, #12, 600 V, EPR insulation	102.61

Conduit/Tray No: T40 | Reference: E-13, E-46, E-47
Size: 305 | Type: 6" siderail ladder tray
From: (E) TOS/COM Pull box | To: Above RTU's and Cabinets
Total Fill (mm2): 3374.37 | Remarks: Existing tray, add new cable (s) as listed below.
Allowable Fill (mm2): 8387.08
Description of Changes:

Included Cable No.	Conductor Type	Area (mm2)
1473-1	50 pair #18, shielded pairs, IS/OS shield 600 V, XLPE insul., PVC jacket	1201.71
1475-1	72 Fiber, single mode fiber optic riser cable	323.65
1477-1	72 Fiber, single mode fiber optic riser cable	323.65
2473-1	50 pair #18, shielded pairs, IS/OS shield 600 V, XLPE insul., PVC jacket	1201.71
2475-1	72 Fiber, single mode fiber optic riser cable	323.65

5 **REVISED PER ADDENDUM No. 5 DATED JULY 30, 2009**

CONDUIT AND TRAY SCHEDULE
UNDERGROUND

E-244

REVISED BY | DATE REVISED
CARMELO RIVERA | ELLERY LUCAS
CALCULATED-DESIGNED BY | CHECKED BY
CONSULTANT FUNCTIONAL SUPERVISOR
BEHZAD GOLEMOHAMMADI
STATE OF CALIFORNIA - DEPARTMENT OF TRANSPORTATION
Caltrans

LAST REVISION 00-00-00 | DATE PLOTTED => 28-JUL-2009 | TIME PLOTTED => 06:37

Dist	COUNTY	ROUTE	KILOMETER POST TOTAL PROJECT	SHEET No.	TOTAL SHEETS
04	SF	80	12.7/13.2	363B	806

Caltrans Metric

5

4/10/09
REGISTERED ELECTRICAL ENGINEER

6-23-08
PLANS APPROVAL DATE

REGISTERED PROFESSIONAL ENGINEER
FADI WALIEDDINE
No. 11465
Exp. 12/31/09
ELECTRICAL
STATE OF CALIFORNIA

THE STATE OF CALIFORNIA OR ITS OFFICERS OR AGENTS SHALL NOT BE RESPONSIBLE FOR THE ACCURACY OR COMPLETENESS OF ELECTRONIC COPIES OF THIS PLAN SHEET.

PB AMERICAS, Inc.
A Parsons Brinckerhoff Company
303 Second St., Suite 700N
San Francisco, CA 94107-1317

Conduit/Tray No: *0504 | Reference: E-34, E-23
Size: 103 | Type: RGS conduit
From: (E) Manhole-22 | To: Sta 4 + 85
Total Fill (mm2): 2541.20 | Remarks: Existing conduit, add new cable (s) and pull rope thru the entire length of the connected conduits as listed below.
Allowable Fill (mm2): 3324.51
Description of Changes:

Included Cable No.	Conductor Type	Area (mm2)
A-3008-1	1-2/C + Gnd, #8, 600 V, EPR insulation	227.46
A-3009-1	1-3/C + Gnd, #2, 600 V, EPR insulation	527.18
A-3010-1	1-3/C + Gnd, #2, 600 V, EPR insulation	527.18
Pull Rope	Soft-Fiber Polyester	0.00
S-3021-1	1-3/C + Gnd, #4, 600 V, EPR insulation	366.10
S-3022-1	1-3/C + Gnd, #2, 600 V, EPR insulation	527.18
S-3023-1	1-3/C + Gnd, #4, 600 V, EPR insulation	366.10

Conduit/Tray No: *0506 | Reference: E-34, E-23
Size: 103 | Type: RGS conduit
From: (E) Manhole-22 | To: Sta 4 + 85
Total Fill (mm2): 2554.41 | Remarks: Existing conduit, add new cable (s) and pull rope thru the entire length of the connected conduits as listed below.
Allowable Fill (mm2): 3324.51
Description of Changes:

Included Cable No.	Conductor Type	Area (mm2)
1106	1-3/C + Gnd, #6, 600 V, EPR insulation	324.29
A-1035-1	1-3/C + Gnd, #6, 600 V, EPR insulation	324.29
A-3011-1	1-3/C + Gnd, #2, 600 V, EPR insulation	527.18
A-3012-1	1-3/C + Gnd, #2, 600 V, EPR insulation	527.18
A-3013-1	1-3/C + Gnd, #2, 600 V, EPR insulation	527.18
Pull Rope	Soft-Fiber Polyester	0.00
S-3056-1	1-3/C + Gnd, #6, 600 V, EPR insulation	324.29

Conduit/Tray No: *0510 | Reference: E-34, E-24
Size: 103 | Type: RGS conduit
From: (E) Manhole-24 | To: Sta 4 + 85
Total Fill (mm2): 970.95 | Remarks: Existing conduit, add new cable (s) and pull rope thru the entire length of the connected conduits as listed below.
Allowable Fill (mm2): 3324.51
Description of Changes:

Included Cable No.	Conductor Type	Area (mm2)
1475-3	72 Fiber, single mode fiber optic riser cable	323.65
1477-1	72 Fiber, single mode fiber optic riser cable	323.65
2475-4	72 Fiber, single mode fiber optic riser cable	323.65
Pull Rope	Soft-Fiber Polyester	0.00

Conduit/Tray No: *0528 | Reference: E-34, E-23
Size: 103 | Type: RGS conduit
From: (E) Manhole-22 | To: Sta 4 + 85
Total Fill (mm2): 2313.74 | Remarks: Existing conduit, add new cable (s) and pull rope thru the entire length of the connected conduits as listed below.
Allowable Fill (mm2): 3324.51
Description of Changes:

Included Cable No.	Conductor Type	Area (mm2)
Pull Rope	Soft-Fiber Polyester	0.00
S-2031-1	1-3/C + Gnd, #2, 600 V, EPR insulation	527.18
S-2032-1	1-3/C + Gnd, #4, 600 V, EPR insulation	366.10
S-3051-1	1-3/C + Gnd, #4, 600 V, EPR insulation	366.10
S-3052-1	1-3/C + Gnd, #2, 600 V, EPR insulation	527.18
S-3053-1	1-3/C + Gnd, #2, 600 V, EPR insulation	527.18

Conduit/Tray No: *0536 | Reference: E-34, E-24
Size: 103 | Type: RGS conduit
From: (E) Manhole-24 | To: Sta 4 + 85
Total Fill (mm2): 124.55 | Remarks: Existing conduit, add new pull rope thru the entire length of the connected conduits as listed below.
Allowable Fill (mm2): 2576.49
Description of Changes:

Included Cable No.	Conductor Type	Area (mm2)
2910-2	4 pair #24, overall shielded, 300 V, PE insulation (Type IC)	77.13
2910-3	4 pair #22, shielded pairs, FEP insulation (Type SSC)	47.42
Pull Rope	Soft-Fiber Polyester	0.00

5 **ADDED PER ADDENDUM No. 5 DATED JULY 30, 2009**

CONDUIT AND TRAY SCHEDULE
UNDERGROUND

E-244B

REVISED BY | DATE REVISED
JEFFRI HALIM | ELLERY LUCAS
CALCULATED-DESIGNED BY | CHECKED BY
CONSULTANT FUNCTIONAL SUPERVISOR
BEHZAD GOLEMOHAMMADI
STATE OF CALIFORNIA - DEPARTMENT OF TRANSPORTATION
Caltrans

LAST REVISION 00-00-00 | DATE PLOTTED => 28-JUL-2009 | TIME PLOTTED => 06:37

Dist	COUNTY	ROUTE	KILOMETER POST TOTAL PROJECT	SHEET No.	TOTAL SHEETS
04	SF	80	12.7/13.2	363C	806

Caltrans Metric

5

4/10/09
REGISTERED ELECTRICAL ENGINEER

6-23-08
PLANS APPROVAL DATE

REGISTERED PROFESSIONAL ENGINEER
FADI WALIEDDINE
No. 11465
Exp. 12/31/09
ELECTRICAL
STATE OF CALIFORNIA

THE STATE OF CALIFORNIA OR ITS OFFICERS OR AGENTS SHALL NOT BE RESPONSIBLE FOR THE ACCURACY OR COMPLETENESS OF ELECTRONIC COPIES OF THIS PLAN SHEET.

PB AMERICAS, Inc.
A Parsons Brinckerhoff Company
303 Second St., Suite 700N
San Francisco, CA 94107-1317

Conduit/Tray No:	0080
Reference:	E-32, E-16
Size:	103
Type:	RGS conduit
From:	*0080
To:	Manhole-7
Total Fill (mm2):	2313.74
Allowable Fill (mm2):	3324.51
Remarks:	Connect new conduit to existing conduit. Add new cable (s) and pull rope thru the entire length of the connected conduits as listed below.
Description of Changes:	

Included Cable No.	Conductor Type	Area (mm2)
Pull Rope	Soft-Fiber Polyester	0.00
S-2031-1	1-3/C + Gnd, #2, 600 V, EPR insulation	527.18
S-2032-1	1-3/C + Gnd, #4, 600 V, EPR insulation	366.10
S-3051-1	1-3/C + Gnd, #4, 600 V, EPR insulation	366.10
S-3052-1	1-3/C + Gnd, #2, 600 V, EPR insulation	527.18
S-3053-1	1-3/C + Gnd, #2, 600 V, EPR insulation	527.18

Conduit/Tray No:	0110
Reference:	E-30, E15, E-31
Size:	103
Type:	RGS conduit
From:	(E) 600 V Pull Box
To:	(E) Manhole-5
Total Fill (mm2):	2475.13
Allowable Fill (mm2):	3324.51
Remarks:	Existing conduit, add new cable (s) and pull rope thru the entire length of the connected conduits as listed below.
Description of Changes:	

Included Cable No.	Conductor Type	Area (mm2)
2091	1-3/C + Gnd, #4, 600 V, EPR insulation	366.10
2092	1-3/C + Gnd, #4, 600 V, EPR insulation	366.10
2093	1-3/C + Gnd, #4, 600 V, EPR insulation	366.10
2094	1-3/C + Gnd, #2, 600 V, EPR insulation	527.18
A-2005-1	1-3/C + Gnd, #8, 600 V, EPR insulation	262.68
A-2007-1	1-3/C + Gnd, #6, 600 V, EPR insulation	324.29
A-2009-1	1-3/C + Gnd, #8, 600 V, EPR insulation	262.68
Pull Rope	Soft-Fiber Polyester	0.00

Conduit/Tray No:	0111
Reference:	E-30, E15, E-31
Size:	103
Type:	RGS conduit
From:	(E) 600 V Pull Box
To:	(E) Manhole-5
Total Fill (mm2):	1727.08
Allowable Fill (mm2):	3324.51
Remarks:	Existing conduit, add new cable (s) and pull rope thru the entire length of the connected conduits as listed below.
Description of Changes:	

Included Cable No.	Conductor Type	Area (mm2)
2100	1-3/C + Gnd, #4, 600 V, EPR insulation	366.10
2101	1-3/C + Gnd, #4, 600 V, EPR insulation	366.10
2102	1-3/C + Gnd, #4, 600 V, EPR insulation	366.10
A-2008-1	1-3/C + Gnd, #4, 600 V, EPR insulation	366.10
A-2010-1	1-3/C + Gnd, #8, 600 V, EPR insulation	262.68
Pull Rope	Soft-Fiber Polyester	0.00

Conduit/Tray No:	0115
Reference:	E-30, E15, E-31
Size:	103
Type:	RGS conduit
From:	(E) 600 V Pull Box
To:	(E) Manhole-5
Total Fill (mm2):	2541.20
Allowable Fill (mm2):	3324.51
Remarks:	Existing conduit, add new cable (s) and pull rope thru the entire length of the connected conduits as listed below.
Description of Changes:	

Included Cable No.	Conductor Type	Area (mm2)
A-3008-1	1-2/C + Gnd, #8, 600 V, EPR insulation	227.46
A-3009-1	1-3/C + Gnd, #2, 600 V, EPR insulation	527.18
A-3010-1	1-3/C + Gnd, #2, 600 V, EPR insulation	527.18
Pull Rope	Soft-Fiber Polyester	0.00
S-3021-1	1-3/C + Gnd, #4, 600 V, EPR insulation	366.10
S-3022-1	1-3/C + Gnd, #2, 600 V, EPR insulation	527.18
S-3023-1	1-3/C + Gnd, #4, 600 V, EPR insulation	366.10

Conduit/Tray No:	0124
Reference:	E-30, E15, E-31
Size:	103
Type:	RGS conduit
From:	(E) 600 V Pull Box
To:	(E) Manhole-5
Total Fill (mm2):	2389.69
Allowable Fill (mm2):	3324.51
Remarks:	Existing conduit, add new cable (s) and pull rope thru the entire length of the connected conduits as listed below.
Description of Changes:	

Included Cable No.	Conductor Type	Area (mm2)
A-1005-1	1-3/C + Gnd, #8, 600 V, EPR insulation	262.68
A-1006-1	1-3/C + Gnd, #8, 600 V, EPR insulation	262.68
A-1007-1	1-3/C + Gnd, #4, 600 V, EPR insulation	366.10
A-1008-1	1-3/C + Gnd, #6, 600 V, EPR insulation	324.29
A-1009-1	1-3/C + Gnd, #6, 600 V, EPR insulation	324.29
A-1010-1	1-3/C + Gnd, #6, 600 V, EPR insulation	324.29
Pull Rope	Soft-Fiber Polyester	0.00
S-2021-1	1-3/C + Gnd, #8, 600 V, EPR insulation	262.68
S-2022-1	1-3/C + Gnd, #8, 600 V, EPR insulation	262.68

5 **ADDED PER ADDENDUM No. 5 DATED JULY 30, 2009**

CONDUIT AND TRAY SCHEDULE
UNDERGROUND

E-244C

REVISED BY | DATE REVISED
JEFFRI HALIM | ELLERY LUCAS
CALCULATED-DESIGNED BY | CHECKED BY
CONSULTANT FUNCTIONAL SUPERVISOR
BEHZAD GOLEMOHAMMADI

STATE OF CALIFORNIA - DEPARTMENT OF TRANSPORTATION
Caltrans

LAST REVISION 00-00-00 | DATE PLOTTED => 28-JUL-2009 | TIME PLOTTED => 06:38

Dist	COUNTY	ROUTE	KILOMETER POST TOTAL PROJECT	SHEET No.	TOTAL SHEETS
04	SF	80	12.7/13.2	363D	806

Caltrans Metric

5

4/10/09
REGISTERED ELECTRICAL ENGINEER

6-23-08
PLANS APPROVAL DATE

REGISTERED PROFESSIONAL ENGINEER FADI WALIEDDINE No. 11465 Exp. 12/31/09 ELECTRICAL STATE OF CALIFORNIA

THE STATE OF CALIFORNIA OR ITS OFFICERS OR AGENTS SHALL NOT BE RESPONSIBLE FOR THE ACCURACY OR COMPLETENESS OF ELECTRONIC COPIES OF THIS PLAN SHEET.

PB AMERICAS, Inc.
A Parsons Brinckerhoff Company
303 Second St., Suite 700N
San Francisco, CA 94107-1317

Conduit/Tray No: 0150 | Reference: E-32, E-16, E-15
Size: 103 | Type: RGS conduit
From: (E) Manhole-5 | To: Manhole-7
Total Fill (mm2): 2475.13 | Remarks:
Allowable Fill (mm2): 3324.51
Description of Changes:

Included Cable No.	Conductor Type	Area (mm2)
2091	1-3/C + Gnd, #4, 600 V, EPR insulation	366.10
2092	1-3/C + Gnd, #4, 600 V, EPR insulation	366.10
2093	1-3/C + Gnd, #4, 600 V, EPR insulation	366.10
2094	1-3/C + Gnd, #2, 600 V, EPR insulation	527.18
A-2005-1	1-3/C + Gnd, #8, 600 V, EPR insulation	262.68
A-2007-1	1-3/C + Gnd, #6, 600 V, EPR insulation	324.29
A-2009-1	1-3/C + Gnd, #8, 600 V, EPR insulation	262.68
Pull Rope	Soft-Fiber Polyester	0.00

Conduit/Tray No: 0151 | Reference: E-32, E-16, E-15
Size: 103 | Type: RGS conduit
From: (E) Manhole-5 | To: Manhole-7
Total Fill (mm2): 1727.08 | Remarks:
Allowable Fill (mm2): 3324.51
Description of Changes:

Included Cable No.	Conductor Type	Area (mm2)
2100	1-3/C + Gnd, #4, 600 V, EPR insulation	366.10
2101	1-3/C + Gnd, #4, 600 V, EPR insulation	366.10
2102	1-3/C + Gnd, #4, 600 V, EPR insulation	366.10
A-2008-1	1-3/C + Gnd, #4, 600 V, EPR insulation	366.10
A-2010-1	1-3/C + Gnd, #8, 600 V, EPR insulation	262.68
Pull Rope	Soft-Fiber Polyester	0.00

Conduit/Tray No: 0155 | Reference: E-32, E-16, E-15
Size: 103 | Type: RGS conduit
From: (E) Manhole-5 | To: Manhole-7
Total Fill (mm2): 2541.20 | Remarks:
Allowable Fill (mm2): 3324.51
Description of Changes:

Included Cable No.	Conductor Type	Area (mm2)
A-3008-1	1-2/C + Gnd, #8, 600 V, EPR insulation	227.46
A-3009-1	1-3/C + Gnd, #2, 600 V, EPR insulation	527.18
A-3010-1	1-3/C + Gnd, #2, 600 V, EPR insulation	527.18
Pull Rope	Soft-Fiber Polyester	0.00
S-3021-1	1-3/C + Gnd, #4, 600 V, EPR insulation	366.10
S-3022-1	1-3/C + Gnd, #2, 600 V, EPR insulation	527.18
S-3023-1	1-3/C + Gnd, #4, 600 V, EPR insulation	366.10

Conduit/Tray No: 0169 | Reference: E-32, E-16, E-15
Size: 103 | Type: RGS conduit
From: (E) Manhole-5 | To: Manhole-7
Total Fill (mm2): 1760.91 | Remarks:
Allowable Fill (mm2): 3324.51
Description of Changes:

Included Cable No.	Conductor Type	Area (mm2)
A-1010-1	1-3/C + Gnd, #6, 600 V, EPR insulation	324.29
Pull Rope	Soft-Fiber Polyester	0.00
S-1002-1	1-3/C + Gnd, #8, 600 V, EPR insulation	262.68
S-1021-1	1-3/C + Gnd, #8, 600 V, EPR insulation	262.68
S-1022-1	1-3/C + Gnd, #8, 600 V, EPR insulation	262.68
S-1023-1	1-3/C + Gnd, #6, 600 V, EPR insulation	324.29
S-1024-1	1-3/C + Gnd, #6, 600 V, EPR insulation	324.29

Conduit/Tray No: 0200 | Reference: E-32, E-28, E-16
Size: 103 | Type: RGS conduit
From: Manhole-7 | To: Manhole-29
Total Fill (mm2): 3207.33 | Remarks:
Allowable Fill (mm2): 3324.51
Description of Changes:

Included Cable No.	Conductor Type	Area (mm2)
2091	1-3/C + Gnd, #4, 600 V, EPR insulation	366.10
2092	1-3/C + Gnd, #4, 600 V, EPR insulation	366.10
2093	1-3/C + Gnd, #4, 600 V, EPR insulation	366.10
2094	1-3/C + Gnd, #2, 600 V, EPR insulation	527.18
2100	1-3/C + Gnd, #4, 600 V, EPR insulation	366.10
2101	1-3/C + Gnd, #4, 600 V, EPR insulation	366.10
A-2005-1	1-3/C + Gnd, #8, 600 V, EPR insulation	262.68
A-2007-1	1-3/C + Gnd, #6, 600 V, EPR insulation	324.29
A-2009-1	1-3/C + Gnd, #8, 600 V, EPR insulation	262.68
Pull Rope	Soft-Fiber Polyester	0.00

5 **ADDED PER ADDENDUM No. 5 DATED JULY 30, 2009**

CONDUIT AND TRAY SCHEDULE
UNDERGROUND

E-244D

REVISED BY | DATE REVISED
JEFFRI HALIM | ELLERY LUCAS
CALCULATED-DESIGNED BY | CHECKED BY
CONSULTANT FUNCTIONAL SUPERVISOR
BEHZAD GOLEMOHAMMADI

STATE OF CALIFORNIA - DEPARTMENT OF TRANSPORTATION
Caltrans

LAST REVISION 00-00-00 | DATE PLOTTED => 28-JUL-2009 | TIME PLOTTED => 06:38

Dist	COUNTY	ROUTE	KILOMETER POST TOTAL PROJECT	SHEET No.	TOTAL SHEETS
04	SF	80	12.7/13.2	363E	806

Caltrans Metric

5

4/10/09
REGISTERED ELECTRICAL ENGINEER

6-23-08
PLANS APPROVAL DATE

REGISTERED PROFESSIONAL ENGINEER
FADI WALIEDDINE
No. 11465
Exp. 12/31/09
ELECTRICAL
STATE OF CALIFORNIA

THE STATE OF CALIFORNIA OR ITS OFFICERS OR AGENTS SHALL NOT BE RESPONSIBLE FOR THE ACCURACY OR COMPLETENESS OF ELECTRONIC COPIES OF THIS PLAN SHEET.

PB AMERICAS, Inc.
A Parsons Brinckerhoff Company
303 Second St., Suite 700N
San Francisco, CA 94107-1317

Conduit/Tray No: 0201 | Reference: E-32, E-28, E-16
Size: 103 | Type: RGS conduit
From: Manhole-7 | To: Manhole-29
Total Fill (mm2): 1643.46 | Remarks:
Allowable Fill (mm2): 3324.51
Description of Changes:

Included Cable No.	Conductor Type	Area (mm2)
2102	1-3/C + Gnd, #4, 600 V, EPR insulation	366.10
A-2008-1	1-3/C + Gnd, #4, 600 V, EPR insulation	366.10
A-2010-1	1-3/C + Gnd, #8, 600 V, EPR insulation	262.68
Pull Rope	Soft-Fiber Polyester	0.00
S-2023-1	1-3/C + Gnd, #6, 600 V, EPR insulation	324.29
S-2024-1	1-3/C + Gnd, #6, 600 V, EPR insulation	324.29

Conduit/Tray No: 0207 | Reference: E-32, E-16, E-17, E-33
Size: 103 | Type: RGS conduit
From: Manhole-7 | To: Manhole-10
Total Fill (mm2): 2541.20 | Remarks:
Allowable Fill (mm2): 3324.51
Description of Changes:

Included Cable No.	Conductor Type	Area (mm2)
A-3008-1	1-2/C + Gnd, #8, 600 V, EPR insulation	227.46
A-3009-1	1-3/C + Gnd, #2, 600 V, EPR insulation	527.18
A-3010-1	1-3/C + Gnd, #2, 600 V, EPR insulation	527.18
Pull Rope	Soft-Fiber Polyester	0.00
S-3021-1	1-3/C + Gnd, #4, 600 V, EPR insulation	366.10
S-3022-1	1-3/C + Gnd, #2, 600 V, EPR insulation	527.18
S-3023-1	1-3/C + Gnd, #4, 600 V, EPR insulation	366.10

Conduit/Tray No: 0227 | Reference: E-32, E-28, E-16
Size: 103 | Type: RGS conduit
From: Manhole-7 | To: Manhole-30
Total Fill (mm2): 849.65 | Remarks:
Allowable Fill (mm2): 3324.51
Description of Changes:

Included Cable No.	Conductor Type	Area (mm2)
A-1010-1	1-3/C + Gnd, #6, 600 V, EPR insulation	324.29
Pull Rope	Soft-Fiber Polyester	0.00
S-1002-1	1-3/C + Gnd, #8, 600 V, EPR insulation	262.68
S-1021-1	1-3/C + Gnd, #8, 600 V, EPR insulation	262.68

Conduit/Tray No: 0232 | Reference: E-32, E-16, E-17, E-33
Size: 103 | Type: RGS conduit
From: Manhole-7 | To: Manhole-10
Total Fill (mm2): 2313.74 | Remarks:
Allowable Fill (mm2): 3324.51
Description of Changes:

Included Cable No.	Conductor Type	Area (mm2)
Pull Rope	Soft-Fiber Polyester	0.00
S-2031-1	1-3/C + Gnd, #2, 600 V, EPR insulation	527.18
S-2032-1	1-3/C + Gnd, #4, 600 V, EPR insulation	366.10
S-3051-1	1-3/C + Gnd, #4, 600 V, EPR insulation	366.10
S-3052-1	1-3/C + Gnd, #2, 600 V, EPR insulation	527.18
S-3053-1	1-3/C + Gnd, #2, 600 V, EPR insulation	527.18

Conduit/Tray No: 0304 | Reference: E-33, E-17, E-19
Size: 103 | Type: RGS conduit
From: Manhole-10 | To: Manhole-13
Total Fill (mm2): 2541.20 | Remarks:
Allowable Fill (mm2): 3324.51
Description of Changes:

Included Cable No.	Conductor Type	Area (mm2)
A-3008-1	1-2/C + Gnd, #8, 600 V, EPR insulation	227.46
A-3009-1	1-3/C + Gnd, #2, 600 V, EPR insulation	527.18
A-3010-1	1-3/C + Gnd, #2, 600 V, EPR insulation	527.18
Pull Rope	Soft-Fiber Polyester	0.00
S-3021-1	1-3/C + Gnd, #4, 600 V, EPR insulation	366.10
S-3022-1	1-3/C + Gnd, #2, 600 V, EPR insulation	527.18
S-3023-1	1-3/C + Gnd, #4, 600 V, EPR insulation	366.10

Conduit/Tray No: 0328 | Reference: E-33, E-17, E-19
Size: 103 | Type: RGS conduit
From: Manhole-10 | To: Manhole-13
Total Fill (mm2): 2313.74 | Remarks:
Allowable Fill (mm2): 3324.51
Description of Changes:

Included Cable No.	Conductor Type	Area (mm2)
Pull Rope	Soft-Fiber Polyester	0.00
S-2031-1	1-3/C + Gnd, #2, 600 V, EPR insulation	527.18
S-2032-1	1-3/C + Gnd, #4, 600 V, EPR insulation	366.10
S-3051-1	1-3/C + Gnd, #4, 600 V, EPR insulation	366.10
S-3052-1	1-3/C + Gnd, #2, 600 V, EPR insulation	527.18
S-3053-1	1-3/C + Gnd, #2, 600 V, EPR insulation	527.18

5 **ADDED PER ADDENDUM No. 5 DATED JULY 30, 2009**

CONDUIT AND TRAY SCHEDULE
UNDERGROUND

E-244E

REVISED BY | DATE REVISED
JEFFRI HALIM | ELLERY LUCAS
CALCULATED-DESIGNED BY | CHECKED BY
CONSULTANT FUNCTIONAL SUPERVISOR
BEHZAD GOLEMOHAMMADI
STATE OF CALIFORNIA - DEPARTMENT OF TRANSPORTATION
Caltrans

LAST REVISION 00-00-00 | DATE PLOTTED => 28-JUL-2009 | TIME PLOTTED => 06:38

Dist	COUNTY	ROUTE	KILOMETER POST TOTAL PROJECT	SHEET No.	TOTAL SHEETS
04	SF	80	12.7/13.2	363F	806

Caltrans Metric

5

4/10/09
REGISTERED ELECTRICAL ENGINEER

PLANS APPROVAL DATE

REGISTERED PROFESSIONAL ENGINEER
FADI WALIEDDINE
No. 11465
Exp. 12/31/09
ELECTRICAL
STATE OF CALIFORNIA

THE STATE OF CALIFORNIA OR ITS OFFICERS OR AGENTS SHALL NOT BE RESPONSIBLE FOR THE ACCURACY OR COMPLETENESS OF ELECTRONIC COPIES OF THIS PLAN SHEET.

PB AMERICAS, Inc.
A Parsons Brinckerhoff Company
303 Second St., Suite 700N
San Francisco, CA 94107-1317

Conduit/Tray No: 0354 | Reference: E-33, E-19, E-20
Size: 103 | Type: RGS conduit
From: Manhole-13 | To: Sta 1 + 63
Total Fill (mm2): 2541.20 | Remarks: Connect new conduit to existing conduit. Add new cable (s) and pull rope thru the entire length of the connected conduits as listed below.
Allowable Fill (mm2): 3324.51
Description of Changes:

Included Cable No.	Conductor Type	Area (mm2)
A-3008-1	1-2/C + Gnd, #8, 600 V, EPR insulation	227.46
A-3009-1	1-3/C + Gnd, #2, 600 V, EPR insulation	527.18
A-3010-1	1-3/C + Gnd, #2, 600 V, EPR insulation	527.18
Pull Rope	Soft-Fiber Polyester	0.00
S-3021-1	1-3/C + Gnd, #4, 600 V, EPR insulation	366.10
S-3022-1	1-3/C + Gnd, #2, 600 V, EPR insulation	527.18
S-3023-1	1-3/C + Gnd, #4, 600 V, EPR insulation	366.10

Conduit/Tray No: 0378 | Reference: E-33, E-19
Size: 103 | Type: RGS conduit
From: Manhole-13 | To: Sta 1 + 63
Total Fill (mm2): 2313.74 | Remarks: Connect new conduit to existing conduit. Add new cable (s) and pull rope thru the entire length of the connected conduits as listed below.
Allowable Fill (mm2): 3324.51
Description of Changes:

Included Cable No.	Conductor Type	Area (mm2)
Pull Rope	Soft-Fiber Polyester	0.00
S-2031-1	1-3/C + Gnd, #2, 600 V, EPR insulation	527.18
S-2032-1	1-3/C + Gnd, #4, 600 V, EPR insulation	366.10
S-3051-1	1-3/C + Gnd, #4, 600 V, EPR insulation	366.10
S-3052-1	1-3/C + Gnd, #2, 600 V, EPR insulation	527.18
S-3053-1	1-3/C + Gnd, #2, 600 V, EPR insulation	527.18

Conduit/Tray No: 0404 | Reference: E-33, E-20, E-22
Size: 103 | Type: RGS conduit
From: (E) Manhole-16 | To: (E) Manhole-19
Total Fill (mm2): 2541.20 | Remarks: Existing conduit, add new cable (s) and pull rope thru the entire length of the connected conduits as listed below.
Allowable Fill (mm2): 3324.51
Description of Changes:

Included Cable No.	Conductor Type	Area (mm2)
A-3008-1	1-2/C + Gnd, #8, 600 V, EPR insulation	227.46
A-3009-1	1-3/C + Gnd, #2, 600 V, EPR insulation	527.18
A-3010-1	1-3/C + Gnd, #2, 600 V, EPR insulation	527.18
Pull Rope	Soft-Fiber Polyester	0.00
S-3021-1	1-3/C + Gnd, #4, 600 V, EPR insulation	366.10
S-3022-1	1-3/C + Gnd, #2, 600 V, EPR insulation	527.18
S-3023-1	1-3/C + Gnd, #4, 600 V, EPR insulation	366.10

Conduit/Tray No: 041 | Reference: E-13
Size: 78 | Type: RGS conduit
From: Stub-up below (E) T20 | To: (E) 480 V LVCC-A
Total Fill (mm2): 2067.22 | Remarks: Existing conduit, add new cable (s) and pull rope as listed below.
Allowable Fill (mm2): 1935.24
Description of Changes:

Included Cable No.	Conductor Type	Area (mm2)
1098	1-3/C + Gnd, #2, 600 V, EPR insulation	527.18
A-1005-1	1-3/C + Gnd, #8, 600 V, EPR insulation	262.68
A-1006-1	1-3/C + Gnd, #8, 600 V, EPR insulation	262.68
A-1007-1	1-3/C + Gnd, #4, 600 V, EPR insulation	366.10
A-1008-1	1-3/C + Gnd, #6, 600 V, EPR insulation	324.29
A-1010-1	1-3/C + Gnd, #6, 600 V, EPR insulation	324.29
Pull Rope	Soft-Fiber Polyester	0.00

Conduit/Tray No: 0428 | Reference: E-33, E-20, E-22
Size: 103 | Type: RGS conduit
From: (E) Manhole-16 | To: (E) Manhole-19
Total Fill (mm2): 2313.74 | Remarks: Existing conduit, add new cable (s) and pull rope thru the entire length of the connected conduits as listed below.
Allowable Fill (mm2): 3324.51
Description of Changes:

Included Cable No.	Conductor Type	Area (mm2)
Pull Rope	Soft-Fiber Polyester	0.00
S-2031-1	1-3/C + Gnd, #2, 600 V, EPR insulation	527.18
S-2032-1	1-3/C + Gnd, #4, 600 V, EPR insulation	366.10
S-3051-1	1-3/C + Gnd, #4, 600 V, EPR insulation	366.10
S-3052-1	1-3/C + Gnd, #2, 600 V, EPR insulation	527.18
S-3053-1	1-3/C + Gnd, #2, 600 V, EPR insulation	527.18

5 **ADDED PER ADDENDUM No. 5 DATED JULY 30, 2009**

CONDUIT AND TRAY SCHEDULE
UNDERGROUND

E-244F

REVISED BY | DATE REVISED
JEFFRI HALIM | ELLERY LUCAS
CALCULATED-DESIGNED BY | CHECKED BY
CONSULTANT FUNCTIONAL SUPERVISOR
BEHZAD GOLEMOHAMMADI
STATE OF CALIFORNIA - DEPARTMENT OF TRANSPORTATION
Caltrans

LAST REVISION 00-00-00 | DATE PLOTTED => 28-JUL-2009 | TIME PLOTTED => 06:38

Dist	COUNTY	ROUTE	KILOMETER POST TOTAL PROJECT	SHEET No.	TOTAL SHEETS
04	SF	80	12.7/13.2	363G	806

Caltrans Metric

5

4/10/09
REGISTERED ELECTRICAL ENGINEER

6-23-08
PLANS APPROVAL DATE

REGISTERED PROFESSIONAL ENGINEER
FADI WALIEDDINE
No. 11465
Exp. 12/31/09
ELECTRICAL
STATE OF CALIFORNIA

THE STATE OF CALIFORNIA OR ITS OFFICERS OR AGENTS SHALL NOT BE RESPONSIBLE FOR THE ACCURACY OR COMPLETENESS OF ELECTRONIC COPIES OF THIS PLAN SHEET.

PB AMERICAS, Inc.
A Parsons Brinckerhoff Company
303 Second St., Suite 700N
San Francisco, CA 94107-1317

Conduit/Tray No:	0454	Reference:	E-34, E-22, E-23
Size:	103	Type:	RGS conduit
From:	(E) Manhole-19	To:	(E) Manhole-22
Total Fill (mm2):	2541.20	Remarks:	Existing conduit, add new cable (s) and pull rope thru the entire length of the connected conduits as listed below.
Allowable Fill (mm2):	3324.51		

Description of Changes:

Included Cable No.	Conductor Type	Area (mm2)
A-3008-1	1-2/C + Gnd, #8, 600 V, EPR insulation	227.46
A-3009-1	1-3/C + Gnd, #2, 600 V, EPR insulation	527.18
A-3010-1	1-3/C + Gnd, #2, 600 V, EPR insulation	527.18
Pull Rope	Soft-Fiber Polyester	0.00
S-3021-1	1-3/C + Gnd, #4, 600 V, EPR insulation	366.10
S-3022-1	1-3/C + Gnd, #2, 600 V, EPR insulation	527.18
S-3023-1	1-3/C + Gnd, #4, 600 V, EPR insulation	366.10

Conduit/Tray No:	0478	Reference:	E-34, E-22, E-23
Size:	103	Type:	RGS conduit
From:	(E) Manhole-19	To:	(E) Manhole-22
Total Fill (mm2):	2313.74	Remarks:	Existing conduit, add new cable (s) and pull rope thru the entire length of the connected conduits as listed below.
Allowable Fill (mm2):	3324.51		

Description of Changes:

Included Cable No.	Conductor Type	Area (mm2)
Pull Rope	Soft-Fiber Polyester	0.00
S-2031-1	1-3/C + Gnd, #2, 600 V, EPR insulation	527.18
S-2032-1	1-3/C + Gnd, #4, 600 V, EPR insulation	366.10
S-3051-1	1-3/C + Gnd, #4, 600 V, EPR insulation	366.10
S-3052-1	1-3/C + Gnd, #2, 600 V, EPR insulation	527.18
S-3053-1	1-3/C + Gnd, #2, 600 V, EPR insulation	527.18

Conduit/Tray No:	0504	Reference:	E-34, E-25, E-23
Size:	103	Type:	RGS conduit
From:	Sta 4 + 85	To:	(E) Manhole-25
Total Fill (mm2):	2541.20	Remarks:	Connect new conduit to existing conduit. Add new cable (s) and pull rope thru the entire length of the connected conduits as listed below.
Allowable Fill (mm2):	3324.51		

Description of Changes:

Included Cable No.	Conductor Type	Area (mm2)
A-3008-1	1-2/C + Gnd, #8, 600 V, EPR insulation	227.46
A-3009-1	1-3/C + Gnd, #2, 600 V, EPR insulation	527.18
A-3010-1	1-3/C + Gnd, #2, 600 V, EPR insulation	527.18
Pull Rope	Soft-Fiber Polyester	0.00
S-3021-1	1-3/C + Gnd, #4, 600 V, EPR insulation	366.10
S-3022-1	1-3/C + Gnd, #2, 600 V, EPR insulation	527.18
S-3023-1	1-3/C + Gnd, #4, 600 V, EPR insulation	366.10

Conduit/Tray No:	0528	Reference:	E-34, E-25, E-28
Size:	103	Type:	RGS conduit
From:	Sta 4 + 85	To:	(E) Manhole-25
Total Fill (mm2):	2313.74	Remarks:	Connect new conduit to existing conduit. Add new cable (s) and pull rope thru the entire length of the connected conduits as listed below.
Allowable Fill (mm2):	3324.51		

Description of Changes:

Included Cable No.	Conductor Type	Area (mm2)
Pull Rope	Soft-Fiber Polyester	0.00
S-2031-1	1-3/C + Gnd, #2, 600 V, EPR insulation	527.18
S-2032-1	1-3/C + Gnd, #4, 600 V, EPR insulation	366.10
S-3051-1	1-3/C + Gnd, #4, 600 V, EPR insulation	366.10
S-3052-1	1-3/C + Gnd, #2, 600 V, EPR insulation	527.18
S-3053-1	1-3/C + Gnd, #2, 600 V, EPR insulation	527.18

Conduit/Tray No:	067	Reference:	E-13
Size:	78	Type:	RGS conduit
From:	Stub-up below (E) T20	To:	(E) 480 V LVCC-A
Total Fill (mm2):	1259.38	Remarks:	Existing conduit, add new cable (s) and pull rope as listed below.
Allowable Fill (mm2):	1935.24		

Description of Changes:

Included Cable No.	Conductor Type	Area (mm2)
Pull Rope	Soft-Fiber Polyester	0.00
S-3021-1	1-3/C + Gnd, #4, 600 V, EPR insulation	366.10
S-3022-1	1-3/C + Gnd, #2, 600 V, EPR insulation	527.18
S-3023-1	1-3/C + Gnd, #4, 600 V, EPR insulation	366.10

5 **ADDED PER ADDENDUM No. 5 DATED JULY 30, 2009**

CONDUIT AND TRAY SCHEDULE
UNDERGROUND

E-244G

REVISED BY | DATE REVISED
JEFFRI HALIM | ELLERY LUCAS
CALCULATED-DESIGNED BY | CHECKED BY
CONSULTANT FUNCTIONAL SUPERVISOR
BEHZAD GOLEMOHAMMADI
STATE OF CALIFORNIA - DEPARTMENT OF TRANSPORTATION
Caltrans

LAST REVISION 00-00-00 | DATE PLOTTED => 28-JUL-2009 | TIME PLOTTED => 06:38

Dist	COUNTY	ROUTE	KILOMETER POST TOTAL PROJECT	SHEET No.	TOTAL SHEETS
04	SF	80	12.7/13.2	363H	806

Caltrans Metric

5

4/10/09
REGISTERED ELECTRICAL ENGINEER

6-23-08
PLANS APPROVAL DATE

REGISTERED PROFESSIONAL ENGINEER FADI WALIEDDINE No. 11465 Exp. 12/31/09 ELECTRICAL STATE OF CALIFORNIA

THE STATE OF CALIFORNIA OR ITS OFFICERS OR AGENTS SHALL NOT BE RESPONSIBLE FOR THE ACCURACY OR COMPLETENESS OF ELECTRONIC COPIES OF THIS PLAN SHEET.

PB AMERICAS, Inc.
A Parsons Brinckerhoff Company
303 Second St., Suite 700N
San Francisco, CA 94107-1317

Conduit/Tray No: 094 | Reference: E-13
Size: 78 | Type: RGS conduit
From: Stub-up below (E) T31 | To: (E) 480 V LVCC-B
Total Fill (mm2): 1478.43 | Remarks: Existing conduit, add new cable (s) and pull rope as listed below.
Allowable Fill (mm2): 1935.24
Description of Changes:

Included Cable No.	Conductor Type	Area (mm2)
A-2005-1	1-3/C + Gnd, #8, 600 V, EPR insulation	262.68
A-2007-1	1-3/C + Gnd, #6, 600 V, EPR insulation	324.29
A-2008-1	1-3/C + Gnd, #4, 600 V, EPR insulation	366.10
A-2009-1	1-3/C + Gnd, #8, 600 V, EPR insulation	262.68
A-2010-1	1-3/C + Gnd, #8, 600 V, EPR insulation	262.68
Pull Rope	Soft-Fiber Polyester	0.00

Conduit/Tray No: 121 | Reference: E-13
Size: 78 | Type: RGS conduit
From: Stub-up below (E) T31 | To: (E) 480 V LVCC-B
Total Fill (mm2): 893.28 | Remarks: Existing conduit, add new cable (s) and pull rope as listed below.
Allowable Fill (mm2): 1499.81
Description of Changes:

Included Cable No.	Conductor Type	Area (mm2)
Pull Rope	Soft-Fiber Polyester	0.00
S-3051-1	1-3/C + Gnd, #4, 600 V, EPR insulation	366.10
S-3053-1	1-3/C + Gnd, #2, 600 V, EPR insulation	527.18

Conduit/Tray No: T20 | Reference: E-13, E-46
Size: 910 | Type: 152 mm siderail ladder tray
From: (E) 600 V Pull Box | To: (E) T21
Total Fill (mm2): 22458.06 | Remarks: Existing tray, add new cable (s) as listed below.
Allowable Fill (mm2): 25161.24
Description of Changes:

Included Cable No.	Conductor Type	Area (mm2)
1091	1-3/C + Gnd, #6, 600 V, EPR insulation	324.29
1092	1-3/C + Gnd, #4, 600 V, EPR insulation	366.10
1093	1-3/C + Gnd, #4, 600 V, EPR insulation	366.10
1094	1-3/C + Gnd, #2, 600 V, EPR insulation	527.18
1095	1-3/C + Gnd, #2, 600 V, EPR insulation	527.18
1096	1-3/C + Gnd, #2, 600 V, EPR insulation	527.18
1097	1-3/C + Gnd, #2, 600 V, EPR insulation	527.18
1098	1-3/C + Gnd, #2, 600 V, EPR insulation	527.18
1099	1-3/C + Gnd, #2, 600 V, EPR insulation	527.18
1105	1-3/C + Gnd, #6, 600 V, EPR insulation	324.29
1106	1-3/C + Gnd, #6, 600 V, EPR insulation	324.29
2091	1-3/C + Gnd, #4, 600 V, EPR insulation	366.10
2092	1-3/C + Gnd, #4, 600 V, EPR insulation	366.10
2093	1-3/C + Gnd, #4, 600 V, EPR insulation	366.10
2094	1-3/C + Gnd, #2, 600 V, EPR insulation	527.18
2095	1-3/C + Gnd, #2, 600 V, EPR insulation	527.18
2096	1-3/C + Gnd, #2, 600 V, EPR insulation	527.18
2097	1-3/C + Gnd, #2, 600 V, EPR insulation	527.18
2123-3	1-3/C + Gnd, #2, 600 V, EPR insulation	527.18
A-1005-1	1-3/C + Gnd, #8, 600 V, EPR insulation	262.68
A-1006-1	1-3/C + Gnd, #8, 600 V, EPR insulation	262.68
A-1007-1	1-3/C + Gnd, #4, 600 V, EPR insulation	366.10
A-1008-1	1-3/C + Gnd, #6, 600 V, EPR insulation	324.29
A-1009-1	1-3/C + Gnd, #6, 600 V, EPR insulation	324.29
A-1010-1	1-3/C + Gnd, #6, 600 V, EPR insulation	324.29
A-1011-1	1-3/C + Gnd, #2, 600 V, EPR insulation	527.18
A-1012-1	1-3/C + Gnd, #2, 600 V, EPR insulation	527.18
A-1013-1	1-3/C + Gnd, #2, 600 V, EPR insulation	527.18
A-1014-1	1-3/C + Gnd, #2, 600 V, EPR insulation	527.18
A-1035-1	1-3/C + Gnd, #6, 600 V, EPR insulation	324.29
A-3001-1	1-3/C + Gnd, #4, 600 V, EPR insulation	366.10
A-3002-1	1-3/C + Gnd, #4, 600 V, EPR insulation	366.10
A-3003-1	1-3/C + Gnd, #4, 600 V, EPR insulation	366.10
A-3004-1	1-3/C + Gnd, #2, 600 V, EPR insulation	527.18
A-3005-1	1-3/C + Gnd, #2, 600 V, EPR insulation	527.18
A-3006-1	1-3/C + Gnd, #4, 600 V, EPR insulation	366.10
A-3008-1	1-2/C + Gnd, #8, 600 V, EPR insulation	227.46
A-3009-1	1-3/C + Gnd, #2, 600 V, EPR insulation	527.18
A-3010-1	1-3/C + Gnd, #2, 600 V, EPR insulation	527.18
A-3011-1	1-3/C + Gnd, #2, 600 V, EPR insulation	527.18
A-3012-1	1-3/C + Gnd, #2, 600 V, EPR insulation	527.18
A-3013-1	1-3/C + Gnd, #2, 600 V, EPR insulation	527.18
S-1001-1	1-3/C + Gnd, #8, 600 V, EPR insulation	262.68
S-1002-1	1-3/C + Gnd, #8, 600 V, EPR insulation	262.68
S-1021-1	1-3/C + Gnd, #8, 600 V, EPR insulation	262.68
S-1022-1	1-3/C + Gnd, #8, 600 V, EPR insulation	262.68
S-1023-1	1-3/C + Gnd, #6, 600 V, EPR insulation	324.29
S-1024-1	1-3/C + Gnd, #6, 600 V, EPR insulation	324.29
S-1031-1	1-3/C + Gnd, #2, 600 V, EPR insulation	527.18
S-1032-1	1-3/C + Gnd, #4, 600 V, EPR insulation	366.10
S-3021-1	1-3/C + Gnd, #4, 600 V, EPR insulation	366.10
S-3022-1	1-3/C + Gnd, #2, 600 V, EPR insulation	527.18
S-3023-1	1-3/C + Gnd, #4, 600 V, EPR insulation	366.10
S-3056-1	1-3/C + Gnd, #6, 600 V, EPR insulation	324.29

5 **ADDED PER ADDENDUM No. 5 DATED JULY 30, 2009**

CONDUIT AND TRAY SCHEDULE
UNDERGROUND

E-244H

REVISED BY	DATE REVISED

JEFFRI HALIM | ELLERY LUCAS
CALCULATED-DESIGNED BY | CHECKED BY
CONSULTANT FUNCTIONAL SUPERVISOR: BEHZAD GOLEMOHAMMADI

STATE OF CALIFORNIA - DEPARTMENT OF TRANSPORTATION
Caltrans

LAST REVISION 00-00-00 | DATE PLOTTED => 28-JUL-2009 | TIME PLOTTED => 06:39

Dist	COUNTY	ROUTE	KILOMETER POST TOTAL PROJECT	SHEET No.	TOTAL SHEETS
04	SF	80	12.7/13.2	363I	806

Caltrans Metric

5

4/10/09
REGISTERED ELECTRICAL ENGINEER

6-23-08
PLANS APPROVAL DATE

REGISTERED PROFESSIONAL ENGINEER
FADI WALIEDDINE
No. 11465
Exp. 12/31/09
ELECTRICAL
STATE OF CALIFORNIA

THE STATE OF CALIFORNIA OR ITS OFFICERS OR AGENTS SHALL NOT BE RESPONSIBLE FOR THE ACCURACY OR COMPLETENESS OF ELECTRONIC COPIES OF THIS PLAN SHEET.

PB AMERICAS, Inc.
A Parsons Brinckerhoff Company
303 Second St., Suite 700N
San Francisco, CA 94107-1317

Conduit/Tray No:	T30
Reference:	E-13, E-46
Size:	910
Type:	152 mm siderail ladder tray
From:	(E) 600 V Pull Box
To:	(E) T31
Total Fill (mm2):	19045.28
Remarks:	Existing tray, add new cable (s) as listed below.
Allowable Fill (mm2):	25161.24
Description of Changes:	

Included Cable No.	Conductor Type	Area (mm2)
2098	1-3/C + Gnd, #2, 600 V, EPR insulation	527.18
2099	1-3/C + Gnd, #2, 600 V, EPR insulation	527.18
2100	1-3/C + Gnd, #4, 600 V, EPR insulation	366.10
2101	1-3/C + Gnd, #4, 600 V, EPR insulation	366.10
2102	1-3/C + Gnd, #4, 600 V, EPR insulation	366.10
2103	1-3/C + Gnd, #2, 600 V, EPR insulation	527.18
2104	1-3/C + Gnd, #2, 600 V, EPR insulation	527.18
2105	1-3/C + Gnd, #2, 600 V, EPR insulation	527.18
2106	1-3/C + Gnd, #2, 600 V, EPR insulation	527.18
2107	1-3/C + Gnd, #2, 600 V, EPR insulation	527.18
2123-2	1-3/C + Gnd, #2, 600 V, EPR insulation	527.18
A-2005-1	1-3/C + Gnd, #8, 600 V, EPR insulation	262.68
A-2007-1	1-3/C + Gnd, #6, 600 V, EPR insulation	324.29
A-2008-1	1-3/C + Gnd, #4, 600 V, EPR insulation	366.10
A-2009-1	1-3/C + Gnd, #8, 600 V, EPR insulation	262.68
A-2010-1	1-3/C + Gnd, #8, 600 V, EPR insulation	262.68
A-2011-1	1-3/C + Gnd, #2, 600 V, EPR insulation	527.18
A-2012-1	1-3/C + Gnd, #2, 600 V, EPR insulation	527.18
A-2013-1	1-3/C + Gnd, #2, 600 V, EPR insulation	527.18
A-2014-1	1-3/C + Gnd, #2, 600 V, EPR insulation	527.18
A-2035-1	1-3/C + Gnd, #6, 600 V, EPR insulation	324.29
A-3031-1	1-3/C + Gnd, #4, 600 V, EPR insulation	366.10
A-3032-1	1-3/C + Gnd, #4, 600 V, EPR insulation	366.10
A-3033-1	1-3/C + Gnd, #2, 600 V, EPR insulation	527.18
A-3034-1	1-3/C + Gnd, #2, 600 V, EPR insulation	527.18
A-3035-1	1-3/C + Gnd, #4, 600 V, EPR insulation	366.10
A-3036-1	1-3/C + Gnd, #4, 600 V, EPR insulation	366.10
A-3039-1	1-3/C + Gnd, #2, 600 V, EPR insulation	527.18
A-3040-1	1-3/C + Gnd, #2, 600 V, EPR insulation	527.18
A-3041-1	1-3/C + Gnd, #2, 600 V, EPR insulation	527.18
A-3042-1	1-3/C + Gnd, #2, 600 V, EPR insulation	527.18
A-3043-1	1-3/C + Gnd, #2, 600 V, EPR insulation	527.18
A-3057-1	1-3/C + Gnd, #2, 600 V, EPR insulation	527.18
S-2021-1	1-3/C + Gnd, #8, 600 V, EPR insulation	262.68
S-2022-1	1-3/C + Gnd, #8, 600 V, EPR insulation	262.68
S-2023-1	1-3/C + Gnd, #6, 600 V, EPR insulation	324.29
S-2024-1	1-3/C + Gnd, #6, 600 V, EPR insulation	324.29
S-2031-1	1-3/C + Gnd, #2, 600 V, EPR insulation	527.18
S-2032-1	1-3/C + Gnd, #4, 600 V, EPR insulation	366.10
S-2041-1	1-3/C + Gnd, #6, 600 V, EPR insulation	324.29
S-2042-1	1-3/C + Gnd, #6, 600 V, EPR insulation	324.29
S-3051-1	1-3/C + Gnd, #4, 600 V, EPR insulation	366.10
S-3052-1	1-3/C + Gnd, #2, 600 V, EPR insulation	527.18
S-3053-1	1-3/C + Gnd, #2, 600 V, EPR insulation	527.18

5 **ADDED PER ADDENDUM No. 5 DATED JULY 30, 2009**

CONDUIT AND TRAY SCHEDULE
UNDERGROUND

E-244I

REVISED BY | DATE REVISED
JEFFRI HALIM | ELLERY LUCAS
CALCULATED-DESIGNED BY | CHECKED BY
CONSULTANT FUNCTIONAL SUPERVISOR
BEHZAD GOLEMOHAMMADI
STATE OF CALIFORNIA - DEPARTMENT OF TRANSPORTATION
Caltrans

LAST REVISION 00-00-00 | DATE PLOTTED => 28-JUL-2009 | TIME PLOTTED => 0741

Dist	COUNTY	ROUTE	KILOMETER POST TOTAL PROJECT	SHEET No.	TOTAL SHEETS
04	SF	80	12.7/13.2	363J	806

Caltrans Metric

5

4/10/09
REGISTERED ELECTRICAL ENGINEER

6-23-08
PLANS APPROVAL DATE

REGISTERED PROFESSIONAL ENGINEER
FADI WALIEDDINE
No. 11465
Exp. 12/31/09
ELECTRICAL
STATE OF CALIFORNIA

THE STATE OF CALIFORNIA OR ITS OFFICERS OR AGENTS SHALL NOT BE RESPONSIBLE FOR THE ACCURACY OR COMPLETENESS OF ELECTRONIC COPIES OF THIS PLAN SHEET.

PB AMERICAS, Inc.
A Parsons Brinckerhoff Company
303 Second St., Suite 700N
San Francisco, CA 94107-1317

Conduit/Tray No:	T31
Reference:	E-13, E-46
Size:	910
Type:	152 mm siderail ladder tray
From:	(E) T30
To:	(E) T32
Total Fill (mm2):	19045.28
Remarks:	Existing tray, add new cable (s) as listed below.
Allowable Fill (mm2):	25161.24
Description of Changes:	

Included Cable No.	Conductor Type	Area (mm2)
2098	1-3/C + Gnd, #2, 600 V, EPR insulation	527.18
2099	1-3/C + Gnd, #2, 600 V, EPR insulation	527.18
2100	1-3/C + Gnd, #4, 600 V, EPR insulation	366.10
2101	1-3/C + Gnd, #4, 600 V, EPR insulation	366.10
2102	1-3/C + Gnd, #4, 600 V, EPR insulation	366.10
2103	1-3/C + Gnd, #2, 600 V, EPR insulation	527.18
2104	1-3/C + Gnd, #2, 600 V, EPR insulation	527.18
2105	1-3/C + Gnd, #2, 600 V, EPR insulation	527.18
2106	1-3/C + Gnd, #2, 600 V, EPR insulation	527.18
2107	1-3/C + Gnd, #2, 600 V, EPR insulation	527.18
2123-2	1-3/C + Gnd, #2, 600 V, EPR insulation	527.18
A-2005-1	1-3/C + Gnd, #8, 600 V, EPR insulation	262.68
A-2007-1	1-3/C + Gnd, #6, 600 V, EPR insulation	324.29
A-2008-1	1-3/C + Gnd, #4, 600 V, EPR insulation	366.10
A-2009-1	1-3/C + Gnd, #8, 600 V, EPR insulation	262.68
A-2010-1	1-3/C + Gnd, #8, 600 V, EPR insulation	262.68
A-2011-1	1-3/C + Gnd, #2, 600 V, EPR insulation	527.18
A-2012-1	1-3/C + Gnd, #2, 600 V, EPR insulation	527.18
A-2013-1	1-3/C + Gnd, #2, 600 V, EPR insulation	527.18
A-2014-1	1-3/C + Gnd, #2, 600 V, EPR insulation	527.18
A-2035-1	1-3/C + Gnd, #6, 600 V, EPR insulation	324.29
A-3031-1	1-3/C + Gnd, #4, 600 V, EPR insulation	366.10
A-3032-1	1-3/C + Gnd, #4, 600 V, EPR insulation	366.10
A-3033-1	1-3/C + Gnd, #2, 600 V, EPR insulation	527.18
A-3034-1	1-3/C + Gnd, #2, 600 V, EPR insulation	527.18
A-3035-1	1-3/C + Gnd, #4, 600 V, EPR insulation	366.10
A-3036-1	1-3/C + Gnd, #4, 600 V, EPR insulation	366.10
A-3039-1	1-3/C + Gnd, #2, 600 V, EPR insulation	527.18
A-3040-1	1-3/C + Gnd, #2, 600 V, EPR insulation	527.18
A-3041-1	1-3/C + Gnd, #2, 600 V, EPR insulation	527.18
A-3042-1	1-3/C + Gnd, #2, 600 V, EPR insulation	527.18
A-3043-1	1-3/C + Gnd, #2, 600 V, EPR insulation	527.18
A-3057-1	1-3/C + Gnd, #2, 600 V, EPR insulation	527.18
S-2021-1	1-3/C + Gnd, #8, 600 V, EPR insulation	262.68
S-2022-1	1-3/C + Gnd, #8, 600 V, EPR insulation	262.68
S-2023-1	1-3/C + Gnd, #6, 600 V, EPR insulation	324.29
S-2024-1	1-3/C + Gnd, #6, 600 V, EPR insulation	324.29
S-2031-1	1-3/C + Gnd, #2, 600 V, EPR insulation	527.18
S-2032-1	1-3/C + Gnd, #4, 600 V, EPR insulation	366.10
S-2041-1	1-3/C + Gnd, #6, 600 V, EPR insulation	324.29
S-2042-1	1-3/C + Gnd, #6, 600 V, EPR insulation	324.29
S-3051-1	1-3/C + Gnd, #4, 600 V, EPR insulation	366.10
S-3052-1	1-3/C + Gnd, #2, 600 V, EPR insulation	527.18
S-3053-1	1-3/C + Gnd, #2, 600 V, EPR insulation	527.18

5 **ADDED PER ADDENDUM No. 5 DATED JULY 30, 2009**

CONDUIT AND TRAY SCHEDULE
UNDERGROUND

E-244J

REVISED BY | DATE REVISED
JEFFRI HALIM | ELLERY LUCAS
CALCULATED-DESIGNED BY | CHECKED BY
CONSULTANT FUNCTIONAL SUPERVISOR
BEHZAD GOLEMOHAMMADI
STATE OF CALIFORNIA - DEPARTMENT OF TRANSPORTATION
Caltrans

LAST REVISION 00-00-00 | DATE PLOTTED => 28-JUL-2009 | TIME PLOTTED => 07:42

Dist	COUNTY	ROUTE	KILOMETER POST TOTAL PROJECT	SHEET No.	TOTAL SHEETS
04	SF	80	12.7/13.2	368	806

Caltrans Metric

2/14/08
REGISTERED ELECTRICAL ENGINEER

6-23-08
PLANS APPROVAL DATE

REGISTERED PROFESSIONAL ENGINEER
FADI WALIEDDINE
No. 11465
Exp. 12/31/09
ELECTRICAL
STATE OF CALIFORNIA

THE STATE OF CALIFORNIA OR ITS OFFICERS OR AGENTS SHALL NOT BE RESPONSIBLE FOR THE ACCURACY OR COMPLETENESS OF ELECTRONIC COPIES OF THIS PLAN SHEET.

PB AMERICAS, Inc.
A Parsons Brinckerhoff Company
303 Second St., Suite 700N
San Francisco, CA 94107-1317

Conduit/Tray No:	1237
Reference:	E-51
Size:	41
Type:	RGS conduit
From:	PB-COM
To:	PB-COM
Total Fill (mm2):	0.00
Remarks:	
Allowable Fill (mm2):	534.55
Description of Changes:	

Included Cable No.	Conductor Type	Area (mm2)
Pull Rope	Soft-Fiber Polyester	0.00

Conduit/Tray No:	1240
Reference:	E-50
Size:	41
Type:	RGS conduit
From:	PB-COM
To:	PB-COM
Total Fill (mm2):	0.00
Remarks:	
Allowable Fill (mm2):	534.55
Description of Changes:	

Included Cable No.	Conductor Type	Area (mm2)
Pull Rope	Soft-Fiber Polyester	0.00

Conduit/Tray No:	1301
Reference:	E-49
Size:	41
Type:	RGS conduit
From:	PB-LTG
To:	PB-LTG
Total Fill (mm2):	133.19
Remarks:	
Allowable Fill (mm2):	534.55
Description of Changes:	

Included Cable No.	Conductor Type	Area (mm2)
Pull Rope	Soft-Fiber Polyester	0.00
S-1001-2	3 + 1 Gnd, #8, #10, 600 V, RHH/RHW insulation	133.19

Conduit/Tray No:	1302
Reference:	E-49
Size:	41
Type:	RGS conduit
From:	PB-LTG
To:	PB-LTG
Total Fill (mm2):	198.80
Remarks:	
Allowable Fill (mm2):	534.55
Description of Changes:	

Included Cable No.	Conductor Type	Area (mm2)
Pull Rope	Soft-Fiber Polyester	0.00
S-1001-2	3 + 1 Gnd, #8, #10, 600 V, RHH/RHW insulation	133.19
UP101-2B	3 + 1 Gnd, #12, #12, 600 V, RHH/RHW insulation	65.61

Conduit/Tray No:	1303
Reference:	E-49
Size:	41
Type:	RGS conduit
From:	PB-LTG
To:	PB-LTG
Total Fill (mm2):	198.80
Remarks:	
Allowable Fill (mm2):	534.55
Description of Changes:	

Included Cable No.	Conductor Type	Area (mm2)
Pull Rope	Soft-Fiber Polyester	0.00
S-1001-2	3 + 1 Gnd, #8, #10, 600 V, RHH/RHW insulation	133.19
UP101-2B	3 + 1 Gnd, #12, #12, 600 V, RHH/RHW insulation	65.61

5

Conduit/Tray No:	1304
Reference:	E-50
Size:	41
Type:	RGS conduit
From:	PB-LTG
To:	PB-LTG
Total Fill (mm2):	198.80
Remarks:	
Allowable Fill (mm2):	534.55
Description of Changes:	

Included Cable No.	Conductor Type	Area (mm2)
Pull Rope	Soft-Fiber Polyester	0.00
S-1001-2	3 + 1 Gnd, #8, #10, 600 V, RHH/RHW insulation	133.19
UP101-2B	3 + 1 Gnd, #12, #12, 600 V, RHH/RHW insulation	65.61

Conduit/Tray No:	1305
Reference:	E-50
Size:	41
Type:	RGS conduit
From:	PB-LTG
To:	PB-LTG
Total Fill (mm2):	198.80
Remarks:	
Allowable Fill (mm2):	534.55
Description of Changes:	

Included Cable No.	Conductor Type	Area (mm2)
Pull Rope	Soft-Fiber Polyester	0.00
S-1001-2	3 + 1 Gnd, #8, #10, 600 V, RHH/RHW insulation	133.19
UP101-2B	3 + 1 Gnd, #12, #12, 600 V, RHH/RHW insulation	65.61

Conduit/Tray No:	1306
Reference:	E-50
Size:	41
Type:	RGS conduit
From:	PB-LTG
To:	PB-LTG
Total Fill (mm2):	133.19
Remarks:	
Allowable Fill (mm2):	534.55
Description of Changes:	

Included Cable No.	Conductor Type	Area (mm2)
Pull Rope	Soft-Fiber Polyester	0.00
S-1001-2	3 + 1 Gnd, #8, #10, 600 V, RHH/RHW insulation	133.19

5

5 **REVISED PER ADDENDUM No. 5 DATED JULY 30, 2009**

CONDUIT AND TRAY SCHEDULE
YBI TRANSITION STRUCTURES ROADWAY WB

E-249

STATE OF CALIFORNIA - DEPARTMENT OF TRANSPORTATION
Caltrans

CONSULTANT FUNCTIONAL SUPERVISOR: BEHZAD GOLEMOHAMMADI
CALCULATED-DESIGNED BY: CARMELO RIVERA
CHECKED BY: ELLERY LUCAS
REVISED BY
DATE REVISED

LAST REVISION 00-00-00
DATE PLOTTED => 28-JUL-2009
TIME PLOTTED => 06:40

Dist	COUNTY	ROUTE	KILOMETER POST TOTAL PROJECT	SHEET No.	TOTAL SHEETS
04	SF	80	12.7/13.2	369	806

Caltrans Metric

2/14/08
REGISTERED ELECTRICAL ENGINEER

6-23-08
PLANS APPROVAL DATE

REGISTERED PROFESSIONAL ENGINEER
FADI WALIEDDINE
No. 11465
Exp. 12/31/09
ELECTRICAL
STATE OF CALIFORNIA

THE STATE OF CALIFORNIA OR ITS OFFICERS OR AGENTS SHALL NOT BE RESPONSIBLE FOR THE ACCURACY OR COMPLETENESS OF ELECTRONIC COPIES OF THIS PLAN SHEET.

PB AMERICAS, Inc.
A Parsons Brinckerhoff Company
303 Second St., Suite 700N
San Francisco, CA 94107-1317

Conduit/Tray No:	1307	Reference:	E-50
Size:	41	Type:	RGS conduit
From:	PB-LTG	To:	PB-LTG
Total Fill (mm2):	133.19	Remarks:	
Allowable Fill (mm2):	534.55		
Description of Changes:			

Included Cable No.	Conductor Type	Area (mm2)
Pull Rope	Soft-Fiber Polyester	0.00
S-1002-2A	3 + 1 Gnd, #8, #10, 600 V, RHH/RHW insulation	133.19

Conduit/Tray No:	1308	Reference:	E-50
Size:	41	Type:	RGS conduit
From:	PB-LTG	To:	PB-LTG
Total Fill (mm2):	133.19	Remarks:	
Allowable Fill (mm2):	534.55		
Description of Changes:			

Included Cable No.	Conductor Type	Area (mm2)
Pull Rope	Soft-Fiber Polyester	0.00
S-1002-2A	3 + 1 Gnd, #8, #10, 600 V, RHH/RHW insulation	133.19

Conduit/Tray No:	1309	Reference:	E-50
Size:	41	Type:	RGS conduit
From:	PB-LTG	To:	PB-LTG
Total Fill (mm2):	133.19	Remarks:	
Allowable Fill (mm2):	534.55		
Description of Changes:			

Included Cable No.	Conductor Type	Area (mm2)
Pull Rope	Soft-Fiber Polyester	0.00
S-1002-2A	3 + 1 Gnd, #8, #10, 600 V, RHH/RHW insulation	133.19

Conduit/Tray No:	1310	Reference:	E-50
Size:	41	Type:	RGS conduit
From:	PB-LTG	To:	PB-LTG
Total Fill (mm2):	133.19	Remarks:	
Allowable Fill (mm2):	534.55		
Description of Changes:			

Included Cable No.	Conductor Type	Area (mm2)
Pull Rope	Soft-Fiber Polyester	0.00
S-1002-2A	3 + 1 Gnd, #8, #10, 600 V, RHH/RHW insulation	133.19

Conduit/Tray No:	1313	Reference:	E-50
Size:	41	Type:	RGS conduit
From:	PB-LTG	To:	PB-LTG
Total Fill (mm2):	133.19	Remarks:	
Allowable Fill (mm2):	534.55		
Description of Changes:			

Included Cable No.	Conductor Type	Area (mm2)
Pull Rope	Soft-Fiber Polyester	0.00
S-1002-3A	3 + 1 Gnd, #8, #10, 600 V, RHH/RHW insulation	133.19

5

Conduit/Tray No:	1315	Reference:	E-50
Size:	41	Type:	RGS conduit
From:	PB-LTG	To:	PB-LTG
Total Fill (mm2):	133.19	Remarks:	
Allowable Fill (mm2):	534.55		
Description of Changes:			

Included Cable No.	Conductor Type	Area (mm2)
Pull Rope	Soft-Fiber Polyester	0.00
S-1002-3A	3 + 1 Gnd, #8, #10, 600 V, RHH/RHW insulation	133.19

Conduit/Tray No:	1318	Reference:	E-50
Size:	41	Type:	RGS conduit
From:	PB-LTG	To:	PB-LTG
Total Fill (mm2):	133.19	Remarks:	
Allowable Fill (mm2):	534.55		
Description of Changes:			

Included Cable No.	Conductor Type	Area (mm2)
Pull Rope	Soft-Fiber Polyester	0.00
S-1002-3A	3 + 1 Gnd, #8, #10, 600 V, RHH/RHW insulation	133.19

Conduit/Tray No:	1319	Reference:	E-51
Size:	41	Type:	RGS conduit
From:	PB-LTG	To:	PB-LTG
Total Fill (mm2):	133.19	Remarks:	
Allowable Fill (mm2):	534.55		
Description of Changes:			

Included Cable No.	Conductor Type	Area (mm2)
Pull Rope	Soft-Fiber Polyester	0.00
S-1002-3A	3 + 1 Gnd, #8, #10, 600 V, RHH/RHW insulation	133.19

5 **REVISED PER ADDENDUM No. 5 DATED JULY 30, 2009**

CONDUIT AND TRAY SCHEDULE
YBI TRANSITION STRUCTURES ROADWAY WB

E-250

STATE OF CALIFORNIA - DEPARTMENT OF TRANSPORTATION
Caltrans

CONSULTANT FUNCTIONAL SUPERVISOR: BEHZAD GOLEMOHAMMADI
CALCULATED-DESIGNED BY: CARMELO RIVERA
CHECKED BY: ELLERY LUCAS
REVISED BY / DATE REVISED

LAST REVISION 00-00-00
DATE PLOTTED => 28-JUL-2009
TIME PLOTTED => 06:40

Dist	COUNTY	ROUTE	KILOMETER POST TOTAL PROJECT	SHEET No.	TOTAL SHEETS
04	SF	80	12.7/13.2	370	806

REGISTERED ELECTRICAL ENGINEER 2/14/08

6-23-08
PLANS APPROVAL DATE

REGISTERED PROFESSIONAL ENGINEER FADI WALIEDDINE No. 11465 Exp. 12/31/09 ELECTRICAL STATE OF CALIFORNIA

THE STATE OF CALIFORNIA OR ITS OFFICERS OR AGENTS SHALL NOT BE RESPONSIBLE FOR THE ACCURACY OR COMPLETENESS OF ELECTRONIC COPIES OF THIS PLAN SHEET.

PB AMERICAS, Inc.
A Parsons Brinckerhoff Company
303 Second St., Suite 700N
San Francisco, CA 94107-1317

Caltrans Metric

5

~~Conduit/Tray No: 1320 | Reference: E-51~~
~~Size: 41 | Type: RGS conduit~~
~~From: PB-LTG | To: PB-LTG~~
~~Total Fill (mm2): 133.19 | Remarks:~~
~~Allowable Fill (mm2): 534.55~~
~~Description of Changes:~~

Included Cable No.	Conductor Type	Area (mm2)
Pull Rope	Soft-Fiber Polyester	0.00
S-1002-3A	3 + 1 Gnd, #8, #10, 600 V, RHH/RHW insulation	133.19

~~Conduit/Tray No: 1321 | Reference: E-51~~
~~Size: 41 | Type: RGS conduit~~
~~From: PB-LTG | To: PB-LTG~~
~~Total Fill (mm2): 133.19 | Remarks:~~
~~Allowable Fill (mm2): 534.55~~
~~Description of Changes:~~

Included Cable No.	Conductor Type	Area (mm2)
Pull Rope	Soft-Fiber Polyester	0.00
S-1002-3A	3 + 1 Gnd, #8, #10, 600 V, RHH/RHW insulation	133.19

Conduit/Tray No: 1322 | Reference: E-51
Size: 41 | Type: RGS conduit
From: PB-LTG | To: PB-LTG
Total Fill (mm2): 346.04 | Remarks:
Allowable Fill (mm2): 534.55
Description of Changes:

Included Cable No.	Conductor Type	Area (mm2)
A-1007-2	3 + 1 Gnd, #6, #8, 600 V, RHH/RHW insulation	212.85
Pull Rope	Soft-Fiber Polyester	0.00
S-1002-3A	3 + 1 Gnd, #8, #10, 600 V, RHH/RHW insulation	133.19

Conduit/Tray No: 1323 | Reference: E-51
Size: 41 | Type: RGS conduit
From: PB-LTG | To: PB-LTG
Total Fill (mm2): 346.04 | Remarks:
Allowable Fill (mm2): 534.55
Description of Changes:

Included Cable No.	Conductor Type	Area (mm2)
A-1007-2	3 + 1 Gnd, #6, #8, 600 V, RHH/RHW insulation	212.85
Pull Rope	Soft-Fiber Polyester	0.00
S-1002-3A	3 + 1 Gnd, #8, #10, 600 V, RHH/RHW insulation	133.19

Conduit/Tray No: 1324 | Reference: E-51
Size: 41 | Type: RGS conduit
From: PB-LTG | To: PB-LTG
Total Fill (mm2): 346.04 | Remarks:
Allowable Fill (mm2): 534.55
Description of Changes:

Included Cable No.	Conductor Type	Area (mm2)
A-1007-2	3 + 1 Gnd, #6, #8, 600 V, RHH/RHW insulation	212.85
Pull Rope	Soft-Fiber Polyester	0.00
S-1002-3A	3 + 1 Gnd, #8, #10, 600 V, RHH/RHW insulation	133.19

Conduit/Tray No: 1326 | Reference: E-51
Size: 41 | Type: RGS conduit
From: PB-LTG | To: PB-LTG
Total Fill (mm2): 212.85 | Remarks:
Allowable Fill (mm2): 534.55
Description of Changes:

Included Cable No.	Conductor Type	Area (mm2)
A-1007-2	3 + 1 Gnd, #6, #8, 600 V, RHH/RHW insulation	212.85
Pull Rope	Soft-Fiber Polyester	0.00

Conduit/Tray No: 1327 | Reference: E-51
Size: 41 | Type: RGS conduit
From: PB-LTG | To: PB-LTG
Total Fill (mm2): 212.85 | Remarks:
Allowable Fill (mm2): 534.55
Description of Changes:

Included Cable No.	Conductor Type	Area (mm2)
A-1007-2	3 + 1 Gnd, #6, #8, 600 V, RHH/RHW insulation	212.85
Pull Rope	Soft-Fiber Polyester	0.00

5 REVISED PER ADDENDUM No. 5 DATED JULY 30, 2009

CONDUIT AND TRAY SCHEDULE
YBI TRANSITION STRUCTURES ROADWAY WB

E-251

REVISED BY | DATE REVISED
CARMELO RIVERA | ELLERY LUCAS
CALCULATED-DESIGNED BY | CHECKED BY
CONSULTANT FUNCTIONAL SUPERVISOR
BEHZAD GOLEMOHAMMADI
STATE OF CALIFORNIA - DEPARTMENT OF TRANSPORTATION
Caltrans

LAST REVISION 00-00-00 | DATE PLOTTED => 28-JUL-2009 | TIME PLOTTED => 06:40

Dist	COUNTY	ROUTE	KILOMETER POST TOTAL PROJECT	SHEET No.	TOTAL SHEETS
04	SF	80	12.7/13.2	374	806

Caltrans Metric

2/14/08
REGISTERED ELECTRICAL ENGINEER

6-23-08
PLANS APPROVAL DATE

REGISTERED PROFESSIONAL ENGINEER
FADI WALIEDDINE
No. 11465
Exp. 12/31/09
ELECTRICAL
STATE OF CALIFORNIA

THE STATE OF CALIFORNIA OR ITS OFFICERS OR AGENTS SHALL NOT BE RESPONSIBLE FOR THE ACCURACY OR COMPLETENESS OF ELECTRONIC COPIES OF THIS PLAN SHEET.

PB AMERICAS, Inc.
A Parsons Brinckerhoff Company
303 Second St., Suite 700N
San Francisco, CA 94107-1317

Conduit/Tray No:	1410
Reference:	E-50
Size:	41
Type:	RGS conduit
From:	PB-LTG
To:	PB-LTG
Total Fill (mm2):	0.00
Remarks:	
Allowable Fill (mm2):	534.55
Description of Changes:	

Included Cable No.	Conductor Type	Area (mm2)
Pull Rope	Soft-Fiber Polyester	0.00

Conduit/Tray No:	1413
Reference:	E-50
Size:	41
Type:	RGS conduit
From:	PB-LTG
To:	PB-LTG
Total Fill (mm2):	0.00
Remarks:	
Allowable Fill (mm2):	534.55
Description of Changes:	

Included Cable No.	Conductor Type	Area (mm2)
Pull Rope	Soft-Fiber Polyester	0.00

Conduit/Tray No:	1415
Reference:	E-50
Size:	41
Type:	RGS conduit
From:	PB-LTG
To:	PB-LTG
Total Fill (mm2):	0.00
Remarks:	
Allowable Fill (mm2):	534.55
Description of Changes:	

Included Cable No.	Conductor Type	Area (mm2)
Pull Rope	Soft-Fiber Polyester	0.00

Conduit/Tray No:	1418
Reference:	E-50
Size:	41
Type:	RGS conduit
From:	PB-LTG
To:	PB-LTG
Total Fill (mm2):	0.00
Remarks:	
Allowable Fill (mm2):	534.55
Description of Changes:	

Included Cable No.	Conductor Type	Area (mm2)
Pull Rope	Soft-Fiber Polyester	0.00

Conduit/Tray No:	1419
Reference:	E-51
Size:	41
Type:	RGS conduit
From:	PB-LTG
To:	PB-LTG
Total Fill (mm2):	0.00
Remarks:	
Allowable Fill (mm2):	534.55
Description of Changes:	

Included Cable No.	Conductor Type	Area (mm2)
Pull Rope	Soft-Fiber Polyester	0.00

Conduit/Tray No:	1420
Reference:	E-51
Size:	41
Type:	RGS conduit
From:	PB-LTG
To:	PB-LTG
Total Fill (mm2):	0.00
Remarks:	
Allowable Fill (mm2):	534.55
Description of Changes:	

Included Cable No.	Conductor Type	Area (mm2)
Pull Rope	Soft-Fiber Polyester	0.00

Conduit/Tray No:	1421
Reference:	E-51
Size:	41
Type:	RGS conduit
From:	PB-LTG
To:	PB-LTG
Total Fill (mm2):	0.00
Remarks:	
Allowable Fill (mm2):	534.55
Description of Changes:	

Included Cable No.	Conductor Type	Area (mm2)
Pull Rope	Soft-Fiber Polyester	0.00

Conduit/Tray No:	1422
Reference:	E-51
Size:	41
Type:	RGS conduit
From:	PB-LTG
To:	PB-LTG
Total Fill (mm2):	0.00
Remarks:	
Allowable Fill (mm2):	534.55
Description of Changes:	

Included Cable No.	Conductor Type	Area (mm2)
Pull Rope	Soft-Fiber Polyester	0.00

Conduit/Tray No:	1423
Reference:	E-51
Size:	41
Type:	RGS conduit
From:	PB-LTG
To:	PB-LTG
Total Fill (mm2):	0.00
Remarks:	
Allowable Fill (mm2):	534.55
Description of Changes:	

Included Cable No.	Conductor Type	Area (mm2)
Pull Rope	Soft-Fiber Polyester	0.00

5

CONDUIT AND TRAY SCHEDULE
YBI TRANSITION STRUCTURES ROADWAY WB

5 REVISED PER ADDENDUM No. 5 DATED JULY 30, 2009

E-255

REVISED BY | DATE REVISED
CARMELO RIVERA | ELLERY LUCAS
CALCULATED-DESIGNED BY | CHECKED BY
CONSULTANT FUNCTIONAL SUPERVISOR
BEHZAD GOLEMOHAMMADI
STATE OF CALIFORNIA - DEPARTMENT OF TRANSPORTATION
Caltrans

LAST REVISION 00-00-00
DATE PLOTTED => 28-JUL-2009
TIME PLOTTED => 06:40

Dist	COUNTY	ROUTE	KILOMETER POST TOTAL PROJECT	SHEET No.	TOTAL SHEETS
04	SF	80	12.7/13.2	375	806

Caltrans Metric

REGISTERED ELECTRICAL ENGINEER 2/14/08

6-23-08
PLANS APPROVAL DATE

REGISTERED PROFESSIONAL ENGINEER FADI WALIEDDINE No. 11465 Exp. 12/31/09 ELECTRICAL STATE OF CALIFORNIA

THE STATE OF CALIFORNIA OR ITS OFFICERS OR AGENTS SHALL NOT BE RESPONSIBLE FOR THE ACCURACY OR COMPLETENESS OF ELECTRONIC COPIES OF THIS PLAN SHEET.

PB AMERICAS, Inc.
A Parsons Brinckerhoff Company
303 Second St., Suite 700N
San Francisco, CA 94107-1317

5

~~Conduit/Tray No: 1424 | Reference: E-51~~
~~Size: 41 | Type: RGS conduit~~
~~From: PB-LTG | To: PB-LTG~~
~~Total Fill (mm2): 0.00 | Remarks:~~
~~Allowable Fill (mm2): 534.55~~
~~Description of Changes:~~

Included Cable No.	Conductor Type	Area (mm2)
Pull Rope	Soft-Fiber Polyester	0.00

Conduit/Tray No: 1426 | Reference: E-51
Size: 41 | Type: RGS conduit
From: PB-LTG | To: PB-LTG
Total Fill (mm2): 0.00 | Remarks:
Allowable Fill (mm2): 534.55
Description of Changes:

Included Cable No.	Conductor Type	Area (mm2)
Pull Rope	Soft-Fiber Polyester	0.00

Conduit/Tray No: 1427 | Reference: E-51
Size: 41 | Type: RGS conduit
From: PB-LTG | To: PB-LTG
Total Fill (mm2): 0.00 | Remarks:
Allowable Fill (mm2): 534.55
Description of Changes:

Included Cable No.	Conductor Type	Area (mm2)
Pull Rope	Soft-Fiber Polyester	0.00

Conduit/Tray No: 1428 | Reference: E-51
Size: 41 | Type: RGS conduit
From: PB-LTG | To: PB-LTG
Total Fill (mm2): 0.00 | Remarks:
Allowable Fill (mm2): 534.55
Description of Changes:

Included Cable No.	Conductor Type	Area (mm2)
Pull Rope	Soft-Fiber Polyester	0.00

Conduit/Tray No: 1429 | Reference: E-51
Size: 41 | Type: RGS conduit
From: PB-LTG | To: PB-LTG
Total Fill (mm2): 0.00 | Remarks:
Allowable Fill (mm2): 534.55
Description of Changes:

Included Cable No.	Conductor Type	Area (mm2)
Pull Rope	Soft-Fiber Polyester	0.00

Conduit/Tray No: 1431 | Reference: E-51
Size: 41 | Type: RGS conduit
From: PB-LTG | To: PB-LTG
Total Fill (mm2): 0.00 | Remarks:
Allowable Fill (mm2): 534.55
Description of Changes:

Included Cable No.	Conductor Type	Area (mm2)
Pull Rope	Soft-Fiber Polyester	0.00

Conduit/Tray No: 1432 | Reference: E-51, E-52
Size: 41 | Type: RGS conduit
From: PB-LTG | To: PB-LTG
Total Fill (mm2): 0.00 | Remarks:
Allowable Fill (mm2): 534.55
Description of Changes:

Included Cable No.	Conductor Type	Area (mm2)
Pull Rope	Soft-Fiber Polyester	0.00

Conduit/Tray No: 1433 | Reference: E-52
Size: 41 | Type: RGS conduit
From: PB-LTG | To: PB-LTG
Total Fill (mm2): 0.00 | Remarks:
Allowable Fill (mm2): 534.55
Description of Changes:

Included Cable No.	Conductor Type	Area (mm2)
Pull Rope	Soft-Fiber Polyester	0.00

Conduit/Tray No: 1434 | Reference: E-52
Size: 41 | Type: RGS conduit
From: PB-LTG | To: PB-LTG
Total Fill (mm2): 0.00 | Remarks:
Allowable Fill (mm2): 534.55
Description of Changes:

Included Cable No.	Conductor Type	Area (mm2)
Pull Rope	Soft-Fiber Polyester	0.00

5 **REVISED PER ADDENDUM No. 5 DATED JULY 30, 2009**

CONDUIT AND TRAY SCHEDULE
YBI TRANSITION STRUCTURES ROADWAY WB

E-256

STATE OF CALIFORNIA - DEPARTMENT OF TRANSPORTATION
Caltrans

CONSULTANT FUNCTIONAL SUPERVISOR: BEHZAD GOLEMOHAMMADI
CALCULATED-DESIGNED BY: ELLERY LUCAS
CHECKED BY: CARMELO RIVERA
REVISED BY | DATE REVISED

LAST REVISION 00-00-00
DATE PLOTTED => 28-JUL-2009
TIME PLOTTED => 06:40

Dist	COUNTY	ROUTE	KILOMETER POST TOTAL PROJECT	SHEET No.	TOTAL SHEETS
04	SF	80	12.7/13.2	377	806

Caltrans Metric

2/14/08
REGISTERED ELECTRICAL ENGINEER

6-23-08
PLANS APPROVAL DATE

REGISTERED PROFESSIONAL ENGINEER FADI WALIEDDINE No. 11465 Exp. 12/31/09 ELECTRICAL STATE OF CALIFORNIA

THE STATE OF CALIFORNIA OR ITS OFFICERS OR AGENTS SHALL NOT BE RESPONSIBLE FOR THE ACCURACY OR COMPLETENESS OF ELECTRONIC COPIES OF THIS PLAN SHEET.

PB AMERICAS, Inc.
A Parsons Brinckerhoff Company
303 Second St., Suite 700N
San Francisco, CA 94107-1317

Conduit/Tray No:	1446
Reference:	E-52
Size:	41
Type:	RGS conduit
From:	PB-LTG
To:	PB-LTG
Total Fill (mm2):	0.00
Allowable Fill (mm2):	534.55
Remarks:	
Description of Changes:	

Included Cable No.	Conductor Type	Area (mm2)
Pull Rope	Soft-Fiber Polyester	0.00

Conduit/Tray No:	1500
Reference:	E-49
Size:	41
Type:	RGS conduit
From:	PB-COM
To:	End of conduit 1500
Total Fill (mm2):	0.00
Allowable Fill (mm2):	534.55
Remarks:	Stub out conduit West of Bent #48 & cap.
Description of Changes:	

Included Cable No.	Conductor Type	Area (mm2)
-		0.00

Conduit/Tray No:	1501
Reference:	E-49, E-50
Size:	41
Type:	RGS conduit
From:	PB-COM
To:	PB-COM
Total Fill (mm2):	0.00
Allowable Fill (mm2):	534.55
Remarks:	
Description of Changes:	

Included Cable No.	Conductor Type	Area (mm2)
Pull Rope	Soft-Fiber Polyester	0.00

~~Conduit/Tray No: 1502f | Reference: E-50~~
~~Size: 41 | Type: RGS conduit~~
~~From: PB-COM | To: PB-COM~~
~~Total Fill (mm2): 0.00 | Remarks:~~
~~Allowable Fill (mm2): 534.55~~
~~Description of Changes:~~

~~Included Cable No. | Conductor Type | Area (mm2)~~
~~Pull Rope | Soft-Fiber Polyester | 0.00~~

5

Conduit/Tray No:	1503
Reference:	E-50
Size:	41
Type:	RGS conduit
From:	PB-COM
To:	PB-COM
Total Fill (mm2):	0.00
Allowable Fill (mm2):	534.55
Remarks:	
Description of Changes:	

Included Cable No.	Conductor Type	Area (mm2)
Pull Rope	Soft-Fiber Polyester	0.00

Conduit/Tray No:	1504
Reference:	E-50
Size:	41
Type:	RGS conduit
From:	PB-COM
To:	PB-COM
Total Fill (mm2):	0.00
Allowable Fill (mm2):	534.55
Remarks:	
Description of Changes:	

Included Cable No.	Conductor Type	Area (mm2)
Pull Rope	Soft-Fiber Polyester	0.00

Conduit/Tray No:	1505
Reference:	E-51
Size:	41
Type:	RGS conduit
From:	PB-COM
To:	PB-COM
Total Fill (mm2):	0.00
Allowable Fill (mm2):	534.55
Remarks:	
Description of Changes:	

Included Cable No.	Conductor Type	Area (mm2)
Pull Rope	Soft-Fiber Polyester	0.00

Conduit/Tray No:	1506
Reference:	E-51
Size:	41
Type:	RGS conduit
From:	PB-COM
To:	PB-COM
Total Fill (mm2):	0.00
Allowable Fill (mm2):	534.55
Remarks:	
Description of Changes:	

Included Cable No.	Conductor Type	Area (mm2)
Pull Rope	Soft-Fiber Polyester	0.00

Conduit/Tray No:	1507
Reference:	E-52
Size:	41
Type:	RGS conduit
From:	PB-COM
To:	PB-COM
Total Fill (mm2):	0.00
Allowable Fill (mm2):	534.55
Remarks:	
Description of Changes:	

Included Cable No.	Conductor Type	Area (mm2)
Pull Rope	Soft-Fiber Polyester	0.00

5 **REVISED PER ADDENDUM No. 5 DATED JULY 30, 2009**

CONDUIT AND TRAY SCHEDULE
YBI TRANSITION STRUCTURES ROADWAY WB

E-258

REVISED BY | DATE REVISED
CARMELO RIVERA | ELLERY LUCAS
CALCULATED-DESIGNED BY | CHECKED BY
CONSULTANT FUNCTIONAL SUPERVISOR
BEHZAD GOLEMOHAMMADI
STATE OF CALIFORNIA - DEPARTMENT OF TRANSPORTATION
Caltrans

LAST REVISION 00-00-00 | DATE PLOTTED => 28-JUL-2009 | TIME PLOTTED => 06:41

Dist	COUNTY	ROUTE	KILOMETER POST TOTAL PROJECT	SHEET No.	TOTAL SHEETS
04	SF	80	12.7/13.2	379	806

Caltrans Metric

2/14/08
REGISTERED ELECTRICAL ENGINEER

6-23-08
PLANS APPROVAL DATE

REGISTERED PROFESSIONAL ENGINEER FADI WALIEDDINE No. 11465 Exp. 12/31/09 ELECTRICAL STATE OF CALIFORNIA

THE STATE OF CALIFORNIA OR ITS OFFICERS OR AGENTS SHALL NOT BE RESPONSIBLE FOR THE ACCURACY OR COMPLETENESS OF ELECTRONIC COPIES OF THIS PLAN SHEET.

PB AMERICAS, Inc.
A Parsons Brinckerhoff Company
303 Second St., Suite 700N
San Francisco, CA 94107-1317

Conduit/Tray No:	1543
Reference:	E-49
Size:	41
Type:	RGS conduit
From:	(E) PB-LTG
To:	(E) PB-LTG
Total Fill (mm2):	133.19
Remarks:	Existing conduit, add new cable (s) and pull rope as listed below.
Allowable Fill (mm2):	534.55
Description of Changes:	

Included Cable No.	Conductor Type	Area (mm2)
Pull Rope	Soft-Fiber Polyester	0.00
S-1001-2	3 + 1 Gnd, #8, #10, 600 V, RHH/RHW insulation	133.19

Conduit/Tray No:	1544
Reference:	E-49
Size:	41
Type:	RGS conduit
From:	(E) PB-LTG
To:	(E) PB-LTG
Total Fill (mm2):	133.19
Remarks:	Existing conduit, add new cable (s) and pull rope conduits as listed below.
Allowable Fill (mm2):	534.55
Description of Changes:	

Included Cable No.	Conductor Type	Area (mm2)
Pull Rope	Soft-Fiber Polyester	0.00
S-1001-2	3 + 1 Gnd, #8, #10, 600 V, RHH/RHW insulation	133.19

Conduit/Tray No:	1545
Reference:	E-49
Size:	41
Type:	RGS conduit
From:	PB-LTG
To:	1547
Total Fill (mm2):	133.19
Remarks:	Connect new conduit to existing conduit. Add new cable (s) and pull rope thru the entire length of the connected conduits as listed below.
Allowable Fill (mm2):	534.55
Description of Changes:	

Included Cable No.	Conductor Type	Area (mm2)
Pull Rope	Soft-Fiber Polyester	0.00
S-1001-2	3 + 1 Gnd, #8, #10, 600 V, RHH/RHW insulation	133.19

Conduit/Tray No:	1546
Reference:	E-49
Size:	41
Type:	RGS conduit
From:	PB-LTG
To:	PB-LTG
Total Fill (mm2):	133.19
Remarks:	5
Allowable Fill (mm2):	534.55
Description of Changes:	

Included Cable No.	Conductor Type	Area (mm2)
Pull Rope	Soft-Fiber Polyester	0.00
S-1001-2	3 + 1 Gnd, #8, #10, 600 V, RHH/RHW insulation	133.19

Conduit/Tray No:	1547
Reference:	E-49
Size:	41
Type:	RGS conduit
From:	1545
To:	(E) PB-LTG
Total Fill (mm2):	133.19
Remarks:	Existing conduit, add new cable (s) and pull rope thru the entire length of the connected conduits as listed below.
Allowable Fill (mm2):	534.55
Description of Changes:	

Included Cable No.	Conductor Type	Area (mm2)
Pull Rope	Soft-Fiber Polyester	0.00
S-1001-2	3 + 1 Gnd, #8, #10, 600 V, RHH/RHW insulation	133.19

Conduit/Tray No:	1600
Reference:	E-49
Size:	41
Type:	RGS conduit
From:	PB-COM
To:	End of conduit 1600
Total Fill (mm2):	0.00
Remarks:	Stub out conduit West of Bent #48 & cap.
Allowable Fill (mm2):	534.55
Description of Changes:	

Included Cable No.	Conductor Type	Area (mm2)
-		0.00

Conduit/Tray No:	1601
Reference:	E-49, E-50
Size:	41
Type:	RGS conduit
From:	PB-COM
To:	PB-COM
Total Fill (mm2):	0.00
Remarks:	
Allowable Fill (mm2):	534.55
Description of Changes:	

Included Cable No.	Conductor Type	Area (mm2)
Pull Rope	Soft-Fiber Polyester	0.00

5 REVISED PER ADDENDUM No. 5 DATED JULY 30, 2009

CONDUIT AND TRAY SCHEDULE
YBI TRANSITION STRUCTURES ROADWAY WB

E-260

REVISED BY | DATE REVISED
CARMELO RIVERA | ELLERY LUCAS
CALCULATED-DESIGNED BY | CHECKED BY
CONSULTANT FUNCTIONAL SUPERVISOR
BEHZAD GOLEMOHAMMADI
STATE OF CALIFORNIA - DEPARTMENT OF TRANSPORTATION
Caltrans

LAST REVISION 00-00-00 | DATE PLOTTED => 28-JUL-2009 | TIME PLOTTED => 06:41

Dist	COUNTY	ROUTE	KILOMETER POST TOTAL PROJECT	SHEET No.	TOTAL SHEETS
04	SF	80	12.7/13.2	386	806

Caltrans Metric

2/14/08
REGISTERED ELECTRICAL ENGINEER

6-23-08
PLANS APPROVAL DATE

REGISTERED PROFESSIONAL ENGINEER
FADI WALIEDDINE
No. 11465
Exp. 12/31/09
ELECTRICAL
STATE OF CALIFORNIA

THE STATE OF CALIFORNIA OR ITS OFFICERS OR AGENTS SHALL NOT BE RESPONSIBLE FOR THE ACCURACY OR COMPLETENESS OF ELECTRONIC COPIES OF THIS PLAN SHEET.

PB AMERICAS, Inc.
A Parsons Brinckerhoff Company
303 Second St., Suite 700N
San Francisco, CA 94107-1317

Conduit/Tray No:	1778	Reference:	E-48
Size:	41	Type:	RGS conduit
From:	PB-LTG	To:	PB-LTG
Total Fill (mm2):	133.19	Remarks:	
Allowable Fill (mm2):	534.55		
Description of Changes:			

Included Cable No.	Conductor Type	Area (mm2)
Pull Rope	Soft-Fiber Polyester	0.00
S-1001-2	3 + 1 Gnd, #8, #10, 600 V, RHH/RHW insulation	133.19

Conduit/Tray No:	1779	Reference:	E-48
Size:	41	Type:	RGS conduit
From:	PB-LTG	To:	PB-LTG
Total Fill (mm2):	133.19	Remarks:	
Allowable Fill (mm2):	708.28		
Description of Changes:			

Included Cable No.	Conductor Type	Area (mm2)
Pull Rope	Soft-Fiber Polyester	0.00
S-1001-2	3 + 1 Gnd, #8, #10, 600 V, RHH/RHW insulation	133.19

Conduit/Tray No:	1801	Reference:	E-49
Size:	41	Type:	RGS conduit
From:	PB-LTG	To:	PB-LTG
Total Fill (mm2):	0.00	Remarks:	
Allowable Fill (mm2):	534.55		
Description of Changes:			

Included Cable No.	Conductor Type	Area (mm2)
Pull Rope	Soft-Fiber Polyester	0.00

Conduit/Tray No:	1802	Reference:	E-49
Size:	41	Type:	RGS conduit
From:	PB-LTG	To:	PB-LTG
Total Fill (mm2):	0.00	Remarks:	
Allowable Fill (mm2):	534.55		
Description of Changes:			

Included Cable No.	Conductor Type	Area (mm2)
Pull Rope	Soft-Fiber Polyester	0.00

Conduit/Tray No:	1803	Reference:	E-49
Size:	41	Type:	RGS conduit
From:	PB-LTG	To:	PB-LTG
Total Fill (mm2):	0.00	Remarks:	
Allowable Fill (mm2):	534.55		
Description of Changes:			

Included Cable No.	Conductor Type	Area (mm2)
Pull Rope	Soft-Fiber Polyester	0.00

5

Conduit/Tray No:	1804	Reference:	E-52
Size:	41	Type:	RGS conduit
From:	PB-LTG	To:	PB-LTG
Total Fill (mm2):	98.10	Remarks:	
Allowable Fill (mm2):	708.28		
Description of Changes:			

Included Cable No.	Conductor Type	Area (mm2)
1149	1 - 2 pair, shielded #18 with IS/OA, 600 V, PVC jacket	98.10
Pull Rope	Soft-Fiber Polyester	0.00

Conduit/Tray No:	1805	Reference:	E-52
Size:	41	Type:	RGS conduit
From:	PB-LTG	To:	PB-LTG
Total Fill (mm2):	0.00	Remarks:	
Allowable Fill (mm2):	534.55		
Description of Changes:			

Included Cable No.	Conductor Type	Area (mm2)
Pull Rope	Soft-Fiber Polyester	0.00

Conduit/Tray No:	1806	Reference:	E-50
Size:	41	Type:	RGS conduit
From:	PB-LTG	To:	PB-LTG
Total Fill (mm2):	0.00	Remarks:	
Allowable Fill (mm2):	534.55		
Description of Changes:			

Included Cable No.	Conductor Type	Area (mm2)
Pull Rope	Soft-Fiber Polyester	0.00

5 REVISED PER ADDENDUM No. 5 DATED JULY 30, 2009

CONDUIT AND TRAY SCHEDULE
YBI TRANSITION STRUCTURES ROADWAY WB

E-267

REVISED BY | DATE REVISED
CARMELO RIVERA | ELLERY LUCAS
CALCULATED-DESIGNED BY | CHECKED BY
CONSULTANT FUNCTIONAL SUPERVISOR
BEHZAD GOLEMOHAMMADI
STATE OF CALIFORNIA - DEPARTMENT OF TRANSPORTATION
Caltrans

LAST REVISION 00-00-00 | DATE PLOTTED => 28-JUL-2009 | TIME PLOTTED => 06:41

Dist	COUNTY	ROUTE	KILOMETER POST TOTAL PROJECT	SHEET No.	TOTAL SHEETS
04	SF	80	12.7/13.2	390	806

Caltrans Metric

2/14/08
REGISTERED ELECTRICAL ENGINEER

6-23-08
PLANS APPROVAL DATE

REGISTERED PROFESSIONAL ENGINEER
FADI WALIEDDINE
No. 11465
Exp. 12/31/09
ELECTRICAL
STATE OF CALIFORNIA

THE STATE OF CALIFORNIA OR ITS OFFICERS OR AGENTS SHALL NOT BE RESPONSIBLE FOR THE ACCURACY OR COMPLETENESS OF ELECTRONIC COPIES OF THIS PLAN SHEET.

PB AMERICAS, Inc.
A Parsons Brinckerhoff Company
303 Second St., Suite 700N
San Francisco, CA 94107-1317

Conduit/Tray No:	1T21W
Reference:	E-64, E-81
Size:	610
Type:	6" siderail ladder tray
From:	Electrical Vault #1W
To:	Electrical Vault #1W
Total Fill (mm2):	5472.05
Remarks:	
Allowable Fill (mm2):	16774.16
Description of Changes:	

Included Cable No.	Conductor Type	Area (mm2)
1091	1-3/C + Gnd, #6, 600 V, EPR insulation	324.29
1092	1-3/C + Gnd, #4, 600 V, EPR insulation	366.10
1093	1-3/C + Gnd, #4, 600 V, EPR insulation	366.10
1094	1-3/C + Gnd, #2, 600 V, EPR insulation	527.18
1105	1-3/C + Gnd, #6, 600 V, EPR insulation	324.29
1254-1	1-3/C #16, 600 V, EPR insulation	62.07
A-1006-2	1-3/C + Gnd, #8, 600 V, EPR insulation	262.68
A-1007-1	1-3/C + Gnd, #4, 600 V, EPR insulation	366.10
A-1008-1	1-3/C + Gnd, #6, 600 V, EPR insulation	324.29
A-1009-1	1-3/C + Gnd, #6, 600 V, EPR insulation	324.29
S-1002-3	1-3/C + Gnd, #8, 600 V, EPR insulation	262.68
S-1021-1	1-3/C + Gnd, #8, 600 V, EPR insulation	262.68
S-1022-1	1-3/C + Gnd, #8, 600 V, EPR insulation	262.68
S-1022-2	1-3/C + Gnd, #8, 600 V, EPR insulation	262.68
S-1023-1	1-3/C + Gnd, #6, 600 V, EPR insulation	324.29
S-1024-1	1-3/C + Gnd, #6, 600 V, EPR insulation	324.29
S-2021-1	1-3/C + Gnd, #8, 600 V, EPR insulation	262.68
S-2022-1	1-3/C + Gnd, #8, 600 V, EPR insulation	262.68

Conduit/Tray No:	1T22W
Reference:	E-65, E-82
Size:	610
Type:	6" siderail ladder tray
From:	Electrical Vault #2W
To:	Electrical Vault #2W
Total Fill (mm2):	4298.11
Remarks:	
Allowable Fill (mm2):	16774.16
Description of Changes:	

Included Cable No.	Conductor Type	Area (mm2)
1092	1-3/C + Gnd, #4, 600 V, EPR insulation	366.10
1093	1-3/C + Gnd, #4, 600 V, EPR insulation	366.10
1094	1-3/C + Gnd, #2, 600 V, EPR insulation	527.18
1254-1	1-3/C #16, 600 V, EPR insulation	62.07
A-1006-1	1-3/C + Gnd, #8, 600 V, EPR insulation	262.68
A-1006-2	1-3/C + Gnd, #8, 600 V, EPR insulation	262.68
A-1006-3	1-3/C + Gnd, #8, 600 V, EPR insulation	262.68
A-1007-1	1-3/C + Gnd, #4, 600 V, EPR insulation	366.10
A-1008-1	1-3/C + Gnd, #6, 600 V, EPR insulation	324.29
A-1009-1	1-3/C + Gnd, #6, 600 V, EPR insulation	324.29
S-1002-3	1-3/C + Gnd, #8, 600 V, EPR insulation	262.68
S-1022-3	1-3/C + Gnd, #8, 600 V, EPR insulation	262.68
S-1023-1	1-3/C + Gnd, #6, 600 V, EPR insulation	324.29
S-1024-1	1-3/C + Gnd, #6, 600 V, EPR insulation	324.29

5

Conduit/Tray No:	1T23W
Reference:	E-66, E-83
Size:	610
Type:	6" siderail ladder tray
From:	Electrical Vault #3W
To:	Electrical Vault #3W
Total Fill (mm2):	1653.14
Remarks:	
Allowable Fill (mm2):	16774.16
Description of Changes:	

Included Cable No.	Conductor Type	Area (mm2)
1093	1-3/C + Gnd, #4, 600 V, EPR insulation	366.10
1094	1-3/C + Gnd, #2, 600 V, EPR insulation	527.18
1254-1	1-3/C #16, 600 V, EPR insulation	62.07
A-1008-1	1-3/C + Gnd, #6, 600 V, EPR insulation	324.29
S-1024-1	1-3/C + Gnd, #6, 600 V, EPR insulation	324.29
UP103-3	2 + 1 Gnd, #12, #12, 600 V, RHH/RHW insulation	49.21

5 **REVISED PER ADDENDUM No. 5 DATED JULY 30, 2009**

CONDUIT AND TRAY SCHEDULE
YBI TRANSITION STRUCTURES ROADWAY WB

E-271

REVISED BY | DATE REVISED
CARMELO RIVERA | ELLERY LUCAS
CALCULATED-DESIGNED BY | CHECKED BY
CONSULTANT FUNCTIONAL SUPERVISOR
BEHZAD GOLEMOHAMMADI
STATE OF CALIFORNIA - DEPARTMENT OF TRANSPORTATION
Caltrans

LAST REVISION 00-00-00 | DATE PLOTTED => 28-JUL-2009 | TIME PLOTTED => 06:41

Dist	COUNTY	ROUTE	KILOMETER POST TOTAL PROJECT	SHEET No.	TOTAL SHEETS
04	SF	80	12.7/13.2	391	806

REGISTERED ELECTRICAL ENGINEER 2/14/08

6-23-08
PLANS APPROVAL DATE

REGISTERED PROFESSIONAL ENGINEER FADI WALIEDDINE No. 11465 Exp. 12/31/09 ELECTRICAL STATE OF CALIFORNIA

THE STATE OF CALIFORNIA OR ITS OFFICERS OR AGENTS SHALL NOT BE RESPONSIBLE FOR THE ACCURACY OR COMPLETENESS OF ELECTRONIC COPIES OF THIS PLAN SHEET.

PB AMERICAS, Inc.
A Parsons Brinckerhoff Company
303 Second St., Suite 700N
San Francisco, CA 94107-1317

5

Conduit/Tray No: 1T41W
Reference: E-64, E-81
Size: 610
Type: 6" siderail solid bottom tray
From: TOS/COM Vault #1W
To: TOS/COM Vault #1W
Total Fill (mm2): 8615.97
Remarks:
Allowable Fill (mm2): 16774.16
Description of Changes:

Included Cable No.	Conductor Type	Area (mm2)
1148	1 - 2 pair, shielded #18 with IS/OA, 600 V, PVC jacket	98.10
1169	1 - 2 pair, shielded #18 with IS/OA, 600 V, PVC jacket	98.10
1473-1	50 pair #18, shielded pairs, IS/OS shield 600 V, XLPE insul., PVC jacket	1201.71
1473-2	50 pair #18, shielded pairs, IS/OS shield 600 V, XLPE insul., PVC jacket	1201.71
1474-1	50 pair #18, shielded pairs, IS/OS shield 600 V, XLPE insul., PVC jacket	1201.71
1474-2	50 pair #18, shielded pairs, IS/OS shield 600 V, XLPE insul., PVC jacket	1201.71
1475-1	72 Fiber, single mode fiber optic riser cable	323.65
1475-2	72 Fiber, single mode fiber optic riser cable	323.65
1475-3	72 Fiber, single mode fiber optic riser cable	323.65
2900-111A	4 pair #22, shielded pairs, FEP insulation (Type SSC)	47.42
2900-111B	4 pair #22, shielded pairs, FEP insulation (Type SSC)	47.42
2900-11A	4 pair #22, shielded pairs, FEP insulation (Type SSC)	47.42
2900-11B	4 pair #22, shielded pairs, FEP insulation (Type SSC)	47.42
2900-11C	4 pair #22, shielded pairs, FEP insulation (Type SSC)	47.42
2900-121A	4 pair #22, shielded pairs, FEP insulation (Type SSC)	47.42
2900-121B	4 pair #22, shielded pairs, FEP insulation (Type SSC)	47.42
2900-121C	4 pair #22, shielded pairs, FEP insulation (Type SSC)	47.42
2900-21A	4 pair #22, shielded pairs, FEP insulation (Type SSC)	47.42
2900-21B	4 pair #22, shielded pairs, FEP insulation (Type SSC)	47.42
2900-21C	4 pair #22, shielded pairs, FEP insulation (Type SSC)	47.42
2900-31A	4 pair #22, shielded pairs, FEP insulation (Type SSC)	47.42
2900-31B	4 pair #22, shielded pairs, FEP insulation (Type SSC)	47.42
2900-31C	4 pair #22, shielded pairs, FEP insulation (Type SSC)	47.42
2900-41A	4 pair #22, shielded pairs, FEP insulation (Type SSC)	47.42
2900-41B	4 pair #22, shielded pairs, FEP insulation (Type SSC)	47.42
2900-51A	4 pair #22, shielded pairs, FEP insulation (Type SSC)	47.42
2900-51B	4 pair #22, shielded pairs, FEP insulation (Type SSC)	47.42
2900-51C	4 pair #22, shielded pairs, FEP insulation (Type SSC)	47.42
2900-81A	4 pair #22, shielded pairs, FEP insulation (Type SSC)	47.42
A-1005-1	1-3/C + Gnd, #8, 600 V, EPR insulation	262.68
A-1006-1	1-3/C + Gnd, #8, 600 V, EPR insulation	262.68
PLW11	12 DLC	452.77
PLW11	12 DLC	452.77
S-1022-3	1-3/C + Gnd, #8, 600 V, EPR insulation	262.68

Conduit/Tray No: 1T42W
Reference: E-65, E-82
Size: 610
Type: 6" siderail solid bottom tray
From: TOS/COM Vault #2W
To: TOS/COM Vault #2W
Total Fill (mm2): 4733.15
Remarks:
Allowable Fill (mm2): 16774.16
Description of Changes:

Included Cable No.	Conductor Type	Area (mm2)
1148	1 - 2 pair, shielded #18 with IS/OA, 600 V, PVC jacket	98.10
1169	1 - 2 pair, shielded #18 with IS/OA, 600 V, PVC jacket	98.10
1473-2	50 pair #18, shielded pairs, IS/OS shield 600 V, XLPE insul., PVC jacket	1201.71
1473-3	50 pair #18, shielded pairs, IS/OS shield 600 V, XLPE insul., PVC jacket	1201.71
1474-2	50 pair #18, shielded pairs, IS/OS shield 600 V, XLPE insul., PVC jacket	1201.71
1475-2	72 Fiber, single mode fiber optic riser cable	323.65
1475-3	72 Fiber, single mode fiber optic riser cable	323.65
2900-111A	4 pair #22, shielded pairs, FEP insulation (Type SSC)	47.42
2900-111B	4 pair #22, shielded pairs, FEP insulation (Type SSC)	47.42
2900-121A	4 pair #22, shielded pairs, FEP insulation (Type SSC)	47.42
2900-121B	4 pair #22, shielded pairs, FEP insulation (Type SSC)	47.42
2900-121C	4 pair #22, shielded pairs, FEP insulation (Type SSC)	47.42
2900-81A	4 pair #22, shielded pairs, FEP insulation (Type SSC)	47.42

Conduit/Tray No: 1T43W
Reference: E-66, E-83
Size: 610
Type: 6" siderail solid bottom tray
From: TOS/COM Vault #3W
To: TOS/COM Vault #3W
Total Fill (mm2): 3847.68
Remarks:
Allowable Fill (mm2): 16774.16
Description of Changes:

Included Cable No.	Conductor Type	Area (mm2)
1148	1 - 2 pair, shielded #18 with IS/OA, 600 V, PVC jacket	98.10
1169	1 - 2 pair, shielded #18 with IS/OA, 600 V, PVC jacket	98.10
1473-3	50 pair #18, shielded pairs, IS/OS shield 600 V, XLPE insul., PVC jacket	1201.71
1474-2	50 pair #18, shielded pairs, IS/OS shield 600 V, XLPE insul., PVC jacket	1201.71
1475-2	72 Fiber, single mode fiber optic riser cable	323.65
1475-3	72 Fiber, single mode fiber optic riser cable	323.65
2900-111A	4 pair #22, shielded pairs, FEP insulation (Type SSC)	47.42
2900-111B	4 pair #22, shielded pairs, FEP insulation (Type SSC)	47.42
2900-121A	4 pair #22, shielded pairs, FEP insulation (Type SSC)	47.42
2900-121B	4 pair #22, shielded pairs, FEP insulation (Type SSC)	47.42
2900-121C	4 pair #22, shielded pairs, FEP insulation (Type SSC)	47.42
2900-81A	4 pair #22, shielded pairs, FEP insulation (Type SSC)	47.42
PLW01	10 DLC	316.24

Conduit/Tray No: 4001
Reference: E-64
Size: 53
Type: RGS-PVC coated conduit
From: Wireway #1W
To: Panel UP-101
Total Fill (mm2): 476.76
Remarks:
Allowable Fill (mm2): 1165.23
Description of Changes:

Included Cable No.	Conductor Type	Area (mm2)
1091-2	1-4/C + Gnd, #4, 600 V, EPR insulation	476.76
Pull Rope	Soft-Fiber Polyester	0.00

5 **REVISED PER ADDENDUM No. 5 DATED JULY 30, 2009**

CONDUIT AND TRAY SCHEDULE
YBI TRANSITION STRUCTURES ROADWAY WB

E-272

REVISED BY | DATE REVISED
CARMELO RIVERA | ELLERY LUCAS
CALCULATED-DESIGNED BY | CHECKED BY
CONSULTANT FUNCTIONAL SUPERVISOR: BEHZAD GOLEMOHAMMADI
STATE OF CALIFORNIA - DEPARTMENT OF TRANSPORTATION
Caltrans

LAST REVISION 00-00-00 | DATE PLOTTED => 28-JUL-2009 | TIME PLOTTED => 06:42

Dist	COUNTY	ROUTE	KILOMETER POST TOTAL PROJECT	SHEET No.	TOTAL SHEETS
04	SF	80	12.7/13.2	393	806

Caltrans Metric

2/14/08
REGISTERED ELECTRICAL ENGINEER

6-23-08
PLANS APPROVAL DATE

REGISTERED PROFESSIONAL ENGINEER FADI WALIEDDINE No. 11465 Exp. 12/31/09 ELECTRICAL STATE OF CALIFORNIA

THE STATE OF CALIFORNIA OR ITS OFFICERS OR AGENTS SHALL NOT BE RESPONSIBLE FOR THE ACCURACY OR COMPLETENESS OF ELECTRONIC COPIES OF THIS PLAN SHEET.

PB AMERICAS, Inc.
A Parsons Brinckerhoff Company
303 Second St., Suite 700N
San Francisco, CA 94107-1317

Conduit/Tray No: 4014 | Reference: E-64
Size: 53 | Type: RGS-PVC coated conduit
From: Junction Box | To: Splice Cabinet TOS-01WS
Total Fill (mm2): 30.19 | Remarks:
Allowable Fill (mm2): 1165.23
Description of Changes:

Included Cable No.	Conductor Type	Area (mm2)
1475-1C	12 Fiber, single mode fiber optic cable	30.19
Pull Rope	Soft-Fiber Polyester	0.00

Conduit/Tray No: 4015 | Reference: E-64
Size: 53 | Type: RGS-PVC coated conduit
From: Junction Box | To: Controller Cabinet TOS-01WA
Total Fill (mm2): 30.19 | Remarks:
Allowable Fill (mm2): 1165.23
Description of Changes:

Included Cable No.	Conductor Type	Area (mm2)
1475-1C	12 Fiber, single mode fiber optic cable	30.19
Pull Rope	Soft-Fiber Polyester	0.00

Conduit/Tray No: 4016 | Reference: E-64
Size: 53 | Type: RGS conduit
From: 1T21W | To: PB-2J (Loc.Electrical Vaut #1W)
Total Fill (mm2): 788.04 | Remarks:
Allowable Fill (mm2): 879.42
Description of Changes:

Included Cable No.	Conductor Type	Area (mm2)
Pull Rope	Soft-Fiber Polyester	0.00
S-1022-1	1-3/C + Gnd, #8, 600 V, EPR insulation	262.68
S-1022-2	1-3/C + Gnd, #8, 600 V, EPR insulation	262.68
S-1022-3	1-3/C + Gnd, #8, 600 V, EPR insulation	262.68

Conduit/Tray No: 4017 | Reference: E-64
Size: 53 | Type: RGS-PVC coated conduit
From: PB-2B | To: Splice Cabinet TOS-01WS
Total Fill (mm2): 647.30 | Remarks:
Allowable Fill (mm2): 684.55
Description of Changes:

Included Cable No.	Conductor Type	Area (mm2)
1475-1	72 Fiber, single mode fiber optic riser cable	323.65
1475-2	72 Fiber, single mode fiber optic riser cable	323.65
Pull Rope	Soft-Fiber Polyester	0.00

5

~~Conduit/Tray No: 4018 | Reference: E-64, E-81~~
~~Size: 41 | Type: RGS conduit~~
~~From: Electrical Vault #1W | To: PB-LTG~~
~~Total Fill (mm2): 525.36 | Remarks: Exposed conduit shall be RGS-PVC coated.~~
~~Allowable Fill (mm2): 534.55~~
~~Description of Changes:~~

Included Cable No.	Conductor Type	Area (mm2)
A-1005-1	1-3/C + Gnd, #8, 600 V, EPR insulation	262.68
A-1006-2	1-3/C + Gnd, #8, 600 V, EPR insulation	262.68
Pull Rope	Soft-Fiber Polyester	0.00

Conduit/Tray No: 4019 | Reference: E-64
Size: 41 | Type: RGS conduit
From: Electrical Vault #1W | To: PB-LTG
Total Fill (mm2): 262.68 | Remarks: Exposed conduit shall be RGS-PVC coated.
Allowable Fill (mm2): 708.28
Description of Changes:

Included Cable No.	Conductor Type	Area (mm2)
Pull Rope	Soft-Fiber Polyester	0.00
S-1021-1	1-3/C + Gnd, #8, 600 V, EPR insulation	262.68

Conduit/Tray No: 4021 | Reference: E-65
Size: 53 | Type: RGS-PVC coated conduit
From: Wireway #2W | To: Panel UP-102
Total Fill (mm2): 525.97 | Remarks:
Allowable Fill (mm2): 879.42
Description of Changes:

Included Cable No.	Conductor Type	Area (mm2)
1092-2	1-4/C + Gnd, #4, 600 V, EPR insulation	476.76
Pull Rope	Soft-Fiber Polyester	0.00
UP102-3	2 + 1 Gnd, #12, #12, 600 V, RHH/RHW insulation	49.21

REVISED BY | DATE REVISED
CARMELO RIVERA | ELLERY LUCAS
CALCULATED-DESIGNED BY | CHECKED BY
CONSULTANT FUNCTIONAL SUPERVISOR
BEHZAD GOLEMOHAMMADI

STATE OF CALIFORNIA - DEPARTMENT OF TRANSPORTATION
Caltrans

5 **REVISED PER ADDENDUM No. 5 DATED JULY 30, 2009**

CONDUIT AND TRAY SCHEDULE
YBI TRANSITION STRUCTURES ROADWAY WB

E-274

LAST REVISION 00-00-00 | DATE PLOTTED => 28-JUL-2009 | TIME PLOTTED => 06:42

Dist	COUNTY	ROUTE	KILOMETER POST TOTAL PROJECT	SHEET No.	TOTAL SHEETS
04	SF	80	12.7/13.2	397	806

2/14/08
REGISTERED ELECTRICAL ENGINEER

6-23-08
PLANS APPROVAL DATE

REGISTERED PROFESSIONAL ENGINEER FADI WALIEDDINE No. 11465 Exp. 12/31/09 ELECTRICAL STATE OF CALIFORNIA

THE STATE OF CALIFORNIA OR ITS OFFICERS OR AGENTS SHALL NOT BE RESPONSIBLE FOR THE ACCURACY OR COMPLETENESS OF ELECTRONIC COPIES OF THIS PLAN SHEET.

PB AMERICAS, Inc.
A Parsons Brinckerhoff Company
303 Second St., Suite 700N
San Francisco, CA 94107-1317

Caltrans Metric

Conduit/Tray No: 4070 | Reference: E-66
Size: 41 | Type: RGS-PVC coated conduit
From: PB-COM | To: PB-2B
Total Fill (mm2): 98.10 | Remarks:
Allowable Fill (mm2): 702.80
Description of Changes:

Included Cable No.	Conductor Type	Area (mm2)
1149	1 - 2 pair, shielded #18 with IS/OA, 600 V, PVC jacket	98.10
Pull Rope	Soft-Fiber Polyester	0.00

Conduit/Tray No: 4072 | Reference: E-66
Size: 78 | Type: RGS-PVC coated conduit
From: PB-2B | To: Controller Cabinet TOS-03WA
Total Fill (mm2): 1235.78 | Remarks:
Allowable Fill (mm2): 1935.24
Description of Changes:

Included Cable No.	Conductor Type	Area (mm2)
CCTVW01C	TVC	131.79
CCTVW01D	TVL	42.03
CMSW01	Harness #4	569.34
CMSW02	Harness #5	176.38
PLW01	10 DLC	316.24
Pull Rope	Soft-Fiber Polyester	0.00

Conduit/Tray No: 4079 | Reference: E-66
Size: 27 | Type: RGS-PVC coated conduit
From: Controller Cabinet TOS-03WB | To: Controller Cabinet TOS-03WA
Total Fill (mm2): 0.00 | Remarks:
Allowable Fill (mm2): 229.03
Description of Changes:

Included Cable No.	Conductor Type	Area (mm2)
Pull Rope	Soft-Fiber Polyester	0.00

Conduit/Tray No: 4080 | Reference: E-66
Size: 41 | Type: RGS-PVC coated conduit
From: Junction Box | To: Splice Cabinet TOS-03WS
Total Fill (mm2): 0.00 | Remarks:
Allowable Fill (mm2): 534.55
Description of Changes:

Included Cable No.	Conductor Type	Area (mm2)
Pull Rope	Soft-Fiber Polyester	0.00

Conduit/Tray No: 4914 | Reference: E-65
Size: 53 | Type: RGS conduit
From: 1T22W | To: PB-2J (Loc.Electrical Vault #2W)
Total Fill (mm2): 788.04 | Remarks:
Allowable Fill (mm2): 879.42
Description of Changes:

Included Cable No.	Conductor Type	Area (mm2)
A-1006-1	1-3/C + Gnd, #8, 600 V, EPR insulation	262.68
A-1006-2	1-3/C + Gnd, #8, 600 V, EPR insulation	262.68
A-1006-3	1-3/C + Gnd, #8, 600 V, EPR insulation	262.68
Pull Rope	Soft-Fiber Polyester	0.00

Conduit/Tray No: 4916 | Reference: E-65
Size: 53 | Type: RGS-PVC coated conduit
From: Stub-out and cap | To: Stub-out and cap
Total Fill (mm2): 0.00 | Remarks:
Allowable Fill (mm2): 879.42
Description of Changes:

Included Cable No.	Conductor Type	Area (mm2)
Pull Rope	Soft-Fiber Polyester	0.00

~~Conduit/Tray No: 4920 | Reference: E-65, E-82, E-75~~
~~Size: 41 | Type: RGS conduit~~
~~From: Wireway #2W | To: PB-LTG~~
~~Total Fill (mm2): 262.68 | Remarks:~~
~~Allowable Fill (mm2): 708.28~~
~~Description of Changes:~~

Included Cable No.	Conductor Type	Area (mm2)
Pull Rope	Soft-Fiber Polyester	0.00
S-1002-3	1-3/C + Gnd, #8, 600 V, EPR insulation	262.68

5

5 **REVISED PER ADDENDUM No. 5 DATED JULY 30, 2009**

CONDUIT AND TRAY SCHEDULE
YBI TRANSITION STRUCTURES ROADWAY WB

E-278

REVISED BY | DATE REVISED
CARMELO RIVERA | ELLERY LUCAS
CALCULATED-DESIGNED BY | CHECKED BY
CONSULTANT FUNCTIONAL SUPERVISOR
BEHZAD GOLEMOHAMMADI
STATE OF CALIFORNIA - DEPARTMENT OF TRANSPORTATION
Caltrans

LAST REVISION 00-00-00 | DATE PLOTTED => 28-JUL-2009 | TIME PLOTTED => 06:42

Dist	COUNTY	ROUTE	KILOMETER POST TOTAL PROJECT	SHEET No.	TOTAL SHEETS
04	SF	80	12.7/13.2	399	806

Caltrans Metric

REGISTERED ELECTRICAL ENGINEER 2/14/08

6-23-08
PLANS APPROVAL DATE

REGISTERED PROFESSIONAL ENGINEER FADI WALIEDDINE No. 11465 Exp. 12/31/09 ELECTRICAL STATE OF CALIFORNIA

THE STATE OF CALIFORNIA OR ITS OFFICERS OR AGENTS SHALL NOT BE RESPONSIBLE FOR THE ACCURACY OR COMPLETENESS OF ELECTRONIC COPIES OF THIS PLAN SHEET.

PB AMERICAS, Inc.
A Parsons Brinckerhoff Company
303 Second St., Suite 700N
San Francisco, CA 94107-1317

Conduit/Tray No:	4961
Reference:	E-83, E-66
Size:	53
Type:	RGS-PVC coated conduit
From:	Electrical Vault #2W
To:	Wireway #2W
Total Fill (mm2):	0.00
Remarks:	
Allowable Fill (mm2):	879.42
Description of Changes:	

Included Cable No.	Conductor Type	Area (mm2)
Pull Rope	Soft-Fiber Polyester	0.00

Conduit/Tray No:	4962
Reference:	E-82, E-65
Size:	53
Type:	RGS-PVC coated conduit
From:	Electrical Vault #2W
To:	Wireway #2W
Total Fill (mm2):	0.00
Remarks:	
Allowable Fill (mm2):	879.42
Description of Changes:	

Included Cable No.	Conductor Type	Area (mm2)
Pull Rope	Soft-Fiber Polyester	0.00

Conduit/Tray No:	4963
Reference:	E-82, E-65
Size:	53
Type:	RGS-PVC coated conduit
From:	Electrical Vault #2W
To:	Wireway #2W
Total Fill (mm2):	366.10
Remarks:	
Allowable Fill (mm2):	1165.23
Description of Changes:	

Included Cable No.	Conductor Type	Area (mm2)
1092	1-3/C + Gnd, #4, 600 V, EPR insulation	366.10
Pull Rope	Soft-Fiber Polyester	0.00

Conduit/Tray No:	4964
Reference:	E-82, E-65
Size:	53
Type:	RGS-PVC coated conduit
From:	Electrical Vault #2W
To:	Wireway #2W
Total Fill (mm2):	0.00
Remarks:	
Allowable Fill (mm2):	879.42
Description of Changes:	

Included Cable No.	Conductor Type	Area (mm2)
Pull Rope	Soft-Fiber Polyester	0.00

Conduit/Tray No:	4965
Reference:	E-65
Size:	53
Type:	RGS conduit
From:	Electrical Vault #2W
To:	PB-LTG
Total Fill (mm2):	636.18
Remarks:	
Allowable Fill (mm2):	879.42
Description of Changes:	

Included Cable No.	Conductor Type	Area (mm2)
Pull Rope	Soft-Fiber Polyester	0.00
S-1022-3	1-3/C + Gnd, #8, 600 V, EPR insulation	262.68
S-1023-1	1-3/C + Gnd, #6, 600 V, EPR insulation	324.29
UP102-3	2 + 1 Gnd, #12, #12, 600 V, RHH/RHW insulation	49.21

5

Conduit/Tray No:	4966
Reference:	E-65
Size:	41
Type:	RGS conduit
From:	TOS/COM Vault #1W
To:	PB-COM
Total Fill (mm2):	0.00
Remarks:	
Allowable Fill (mm2):	534.55
Description of Changes:	

Included Cable No.	Conductor Type	Area (mm2)
Pull Rope	Soft-Fiber Polyester	0.00

Conduit/Tray No:	4981
Reference:	E-66
Size:	53
Type:	RGS-PVC coated conduit
From:	Wireway #3W
To:	Electrical Vault #3W
Total Fill (mm2):	576.39
Remarks:	
Allowable Fill (mm2):	1165.23
Description of Changes:	

Included Cable No.	Conductor Type	Area (mm2)
1094	1-3/C + Gnd, #2, 600 V, EPR insulation	527.18
Pull Rope	Soft-Fiber Polyester	0.00
UP103-3	2 + 1 Gnd, #12, #12, 600 V, RHH/RHW insulation	49.21

Conduit/Tray No:	4982
Reference:	E-66
Size:	53
Type:	RGS-PVC coated conduit
From:	Wireway #3W
To:	Electrical Vault #3W
Total Fill (mm2):	450.97
Remarks:	
Allowable Fill (mm2):	879.42
Description of Changes:	

Included Cable No.	Conductor Type	Area (mm2)
Pull Rope	Soft-Fiber Polyester	0.00
UP109-1	3 + 1 Gnd, #2, #6, 600 V, RHH/RHW insulation	410.43
UP109-2	2-1/C #10, 600 V, RHH/RHW insulation	40.54

5 **REVISED PER ADDENDUM No. 5 DATED JULY 30, 2009**

CONDUIT AND TRAY SCHEDULE
YBI TRANSITION STRUCTURES ROADWAY WB

E-280

STATE OF CALIFORNIA - DEPARTMENT OF TRANSPORTATION
Caltrans

CONSULTANT FUNCTIONAL SUPERVISOR: BEHZAD GOLEMOHAMMADI
CALCULATED-DESIGNED BY: CARMELO RIVERA
CHECKED BY: ELLERY LUCAS
REVISED BY / DATE REVISED

LAST REVISION 00-00-00
DATE PLOTTED => 28-JUL-2009
TIME PLOTTED => 06:42

Dist	COUNTY	ROUTE	KILOMETER POST TOTAL PROJECT	SHEET No.	TOTAL SHEETS
04	SF	80	12.7/13.2	401	806

5 Caltrans Metric

2/14/08
REGISTERED ELECTRICAL ENGINEER

6-23-08
PLANS APPROVAL DATE

REGISTERED PROFESSIONAL ENGINEER FADI WALIEDDINE No. 11465 Exp. 12/31/09 ELECTRICAL STATE OF CALIFORNIA

THE STATE OF CALIFORNIA OR ITS OFFICERS OR AGENTS SHALL NOT BE RESPONSIBLE FOR THE ACCURACY OR COMPLETENESS OF ELECTRONIC COPIES OF THIS PLAN SHEET.

PB AMERICAS, Inc.
A Parsons Brinckerhoff Company
303 Second St., Suite 700N
San Francisco, CA 94107-1317

Conduit/Tray No:	5907
Reference:	E-64
Size:	41
Type:	RGS-PVC coated conduit
From:	480 V Breaker for UP-101
To:	15 kVA Transformer for UP-101
Total Fill (mm2):	262.68
Remarks:	
Allowable Fill (mm2):	702.80
Description of Changes:	

Included Cable No.	Conductor Type	Area (mm2)
1091-1	1-3/C + Gnd, #8, 600 V, EPR insulation	262.68
Pull Rope	Soft-Fiber Polyester	0.00

Conduit/Tray No:	5971
Reference:	E-64
Size:	41
Type:	RGS-PVC coated conduit
From:	Wireway #1W
To:	480 V Breaker for UP-101
Total Fill (mm2):	324.29
Remarks:	
Allowable Fill (mm2):	702.80
Description of Changes:	

Included Cable No.	Conductor Type	Area (mm2)
1091	1-3/C + Gnd, #6, 600 V, EPR insulation	324.29
Pull Rope	Soft-Fiber Polyester	0.00

Conduit/Tray No:	5972
Reference:	E-65
Size:	41
Type:	RGS-PVC coated conduit
From:	15 kVA Transformer for UP-102
To:	480 V Breaker for UP-102
Total Fill (mm2):	262.68
Remarks:	
Allowable Fill (mm2):	702.80
Description of Changes:	

Included Cable No.	Conductor Type	Area (mm2)
1092-1	1-3/C + Gnd, #8, 600 V, EPR insulation	262.68
Pull Rope	Soft-Fiber Polyester	0.00

Conduit/Tray No:	5973
Reference:	E-65
Size:	41
Type:	RGS-PVC coated conduit
From:	15 kVA Transformer for UP-102
To:	Wireway #2W
Total Fill (mm2):	476.76
Remarks:	
Allowable Fill (mm2):	702.80
Description of Changes:	

Included Cable No.	Conductor Type	Area (mm2)
1092-2	1-4/C + Gnd, #4, 600 V, EPR insulation	476.76
Pull Rope	Soft-Fiber Polyester	0.00

Conduit/Tray No:	5974
Reference:	E-65
Size:	41
Type:	RGS-PVC coated conduit
From:	Wireway #2W
To:	480 V Breaker for UP-102
Total Fill (mm2):	366.10
Remarks:	
Allowable Fill (mm2):	702.80
Description of Changes:	

Included Cable No.	Conductor Type	Area (mm2)
1092	1-3/C + Gnd, #4, 600 V, EPR insulation	366.10
Pull Rope	Soft-Fiber Polyester	0.00

Conduit/Tray No:	5991
Reference:	E-66
Size:	41
Type:	RGS-PVC coated conduit
From:	15 KVA Transformer for UP-103
To:	480 V Breaker for UP-103
Total Fill (mm2):	262.68
Remarks:	
Allowable Fill (mm2):	702.80
Description of Changes:	

Included Cable No.	Conductor Type	Area (mm2)
1093-1	1-3/C + Gnd, #8, 600 V, EPR insulation	262.68
Pull Rope	Soft-Fiber Polyester	0.00

Conduit/Tray No:	5992
Reference:	E-66
Size:	41
Type:	RGS-PVC coated conduit
From:	Wireway #3W
To:	480 V Breaker for UP-103
Total Fill (mm2):	366.10
Remarks:	
Allowable Fill (mm2):	702.80
Description of Changes:	

Included Cable No.	Conductor Type	Area (mm2)
1093	1-3/C + Gnd, #4, 600 V, EPR insulation	366.10
Pull Rope	Soft-Fiber Polyester	0.00

Conduit/Tray No:	5993
Reference:	E-66
Size:	53
Type:	RGS-PVC coated conduit
From:	25 kVA Transformer for UP-109
To:	Wireway #3W
Total Fill (mm2):	527.18
Remarks:	
Allowable Fill (mm2):	1165.23
Description of Changes:	

Included Cable No.	Conductor Type	Area (mm2)
1094-1	1-3/C + Gnd, #2, 600 V, EPR insulation	527.18
Pull Rope	Soft-Fiber Polyester	0.00

CONDUIT AND TRAY SCHEDULE
YBI TRANSITION STRUCTURES ROADWAY WB

5 REVISED PER ADDENDUM No. 5 DATED JULY 30, 2009

E-282

REVISED BY | DATE REVISED
CARMELO RIVERA | ELLERY LUCAS
CALCULATED-DESIGNED BY | CHECKED BY
CONSULTANT FUNCTIONAL SUPERVISOR
BEHZAD GOLEMOHAMMADI
STATE OF CALIFORNIA - DEPARTMENT OF TRANSPORTATION
Caltrans

LAST REVISION 00-00-00 | DATE PLOTTED => 28-JUL-2009 | TIME PLOTTED => 06:43

Dist	COUNTY	ROUTE	KILOMETER POST TOTAL PROJECT	SHEET No.	TOTAL SHEETS
04	SF	80	12.7/13.2	402	806

REGISTERED ELECTRICAL ENGINEER 2/14/08

6-23-08
PLANS APPROVAL DATE

REGISTERED PROFESSIONAL ENGINEER FADI WALIEDDINE No. 11465 Exp. 12/31/09 ELECTRICAL STATE OF CALIFORNIA

THE STATE OF CALIFORNIA OR ITS OFFICERS OR AGENTS SHALL NOT BE RESPONSIBLE FOR THE ACCURACY OR COMPLETENESS OF ELECTRONIC COPIES OF THIS PLAN SHEET.

PB AMERICAS, Inc.
A Parsons Brinckerhoff Company
303 Second St., Suite 700N
San Francisco, CA 94107-1317

Caltrans Metric

5

Conduit/Tray No: 5993A | Reference: E-66
Size: 53 | Type: RGS-PVC coated conduit
From: 25 kVA Transformer for UP-109 | To: Wireway #3W
Total Fill (mm2): 754.18 | Remarks:
Allowable Fill (mm2): 1165.23
Description of Changes:

Included Cable No.	Conductor Type	Area (mm2)
1094-2	1-3/C + Gnd, #1/0, 600 V, EPR insulation	754.18
Pull Rope	Soft-Fiber Polyester	0.00

~~Conduit/Tray No: 5994 | Reference: E-66~~
~~Size: 41 | Type: RGS-PVC coated conduit~~
~~From: 25 kVA Transformer for UP-109 | To: 480 V Breaker for UP-109~~
~~Total Fill (mm2): 527.18 | Remarks:~~
~~Allowable Fill (mm2): 702.80~~
~~Description of Changes:~~

Included Cable No.	Conductor Type	Area (mm2)
1094-1	1-3/C + Gnd, #2, 600 V, EPR insulation	527.18
Pull Rope	Soft-Fiber Polyester	0.00

Conduit/Tray No: 5994A | Reference: E-66
Size: 53 | Type: RGS-PVC coated conduit
From: Wireway #3W | To: Wireway #3W
Total Fill (mm2): 527.18 | Remarks:
Allowable Fill (mm2): 1165.23
Description of Changes:

Included Cable No.	Conductor Type	Area (mm2)
1094-1	1-3/C + Gnd, #2, 600 V, EPR insulation	527.18
Pull Rope	Soft-Fiber Polyester	0.00

Conduit/Tray No: 5995 | Reference: E-66
Size: 53 | Type: RGS-PVC coated conduit
From: Wireway #3W | To: 480 V Breaker for UP-109
Total Fill (mm2): 527.18 | Remarks:
Allowable Fill (mm2): 1165.23
Description of Changes:

Included Cable No.	Conductor Type	Area (mm2)
1094	1-3/C + Gnd, #2, 600 V, EPR insulation	527.18
Pull Rope	Soft-Fiber Polyester	0.00

Conduit/Tray No: 5996 | Reference: E-64
Size: 41 | Type: RGS-PVC coated conduit
From: 15 kVA Transformer for UP-101 | To: Wireway #1W
Total Fill (mm2): 476.76 | Remarks:
Allowable Fill (mm2): 702.80
Description of Changes:

Included Cable No.	Conductor Type	Area (mm2)
1091-2	1-4/C + Gnd, #4, 600 V, EPR insulation	476.76
Pull Rope	Soft-Fiber Polyester	0.00

Conduit/Tray No: 5997 | Reference: E-66
Size: 41 | Type: RGS-PVC coated conduit
From: 15 KVA Transformer for UP-103 | To: Wireway #3W
Total Fill (mm2): 476.76 | Remarks:
Allowable Fill (mm2): 702.80
Description of Changes:

Included Cable No.	Conductor Type	Area (mm2)
1093-2	1-4/C + Gnd, #4, 600 V, EPR insulation	476.76
Pull Rope	Soft-Fiber Polyester	0.00

Conduit/Tray No: Wireway #1W | Reference: E-64, E-67
Size: 203.2 | Type: 8" x 8" wireway, Nema 4X
From: Platform #1W | To: Platform #1W
Total Fill (mm2): 1087.95 | Remarks:
Allowable Fill (mm2): 8258.05
Description of Changes:

Included Cable No.	Conductor Type	Area (mm2)
1091	1-3/C + Gnd, #6, 600 V, EPR insulation	324.29
1091-2	1-4/C + Gnd, #4, 600 V, EPR insulation	476.76
1254-1	1-3/C #16, 600 V, EPR insulation	62.07
UP101-1	2 + 1 Gnd, #12, #12, 600 V, RHH/RHW insulation	49.21
UP101-10	2 + 1 Gnd, #10, #10, 600 V, RHH/RHW insulation	60.80
UP101-2A	3 + 1 Gnd, #12, #12, 600 V, RHH/RHW insulation	65.61
UP101-5	2 + 1 Gnd, #12, #12, 600 V, RHH/RHW insulation	49.21

~~Conduit/Tray No: Wireway #2W | Reference: E-65, E-67~~
~~Size: 155 | Type: 6" x 6" wireway, Nema 4X~~
~~From: Platform #2W | To: Platform #2W~~
~~Total Fill (mm2): 941.28 | Remarks:~~
~~Allowable Fill (mm2): 3548.00~~
~~Description of Changes:~~

Included Cable No.	Conductor Type	Area (mm2)
1092	1-3/C + Gnd, #4, 600 V, EPR insulation	366.10
1092-2	1-4/C + Gnd, #4, 600 V, EPR insulation	476.76
UP102-3	2 + 1 Gnd, #12, #12, 600 V, RHH/RHW insulation	49.21
UP102-5	2 + 1 Gnd, #12, #12, 600 V, RHH/RHW insulation	49.21

5 **REVISED PER ADDENDUM No. 5 DATED JULY 30, 2009**

CONDUIT AND TRAY SCHEDULE
YBI TRANSITION STRUCTURES ROADWAY WB

E-283

REVISED BY | DATE REVISED
CARMELO RIVERA | ELLERY LUCAS
CALCULATED-DESIGNED BY | CHECKED BY
CONSULTANT FUNCTIONAL SUPERVISOR
BEHZAD GOLEMOHAMMADI
STATE OF CALIFORNIA - DEPARTMENT OF TRANSPORTATION
Caltrans

LAST REVISION 00-00-00 | DATE PLOTTED => 28-JUL-2009 | TIME PLOTTED => 06:43

Dist	COUNTY	ROUTE	KILOMETER POST TOTAL PROJECT	SHEET No.	TOTAL SHEETS
04	SF	80	12.7/13.2	403A	806

5 Caltrans Metric

4/10/09
REGISTERED ELECTRICAL ENGINEER

6-23-08
PLANS APPROVAL DATE

REGISTERED PROFESSIONAL ENGINEER FADI WALIEDDINE No. 11465 Exp. 12/31/09 ELECTRICAL STATE OF CALIFORNIA

THE STATE OF CALIFORNIA OR ITS OFFICERS OR AGENTS SHALL NOT BE RESPONSIBLE FOR THE ACCURACY OR COMPLETENESS OF ELECTRONIC COPIES OF THIS PLAN SHEET.

PB AMERICAS, Inc.
A Parsons Brinckerhoff Company
303 Second St., Suite 700N
San Francisco, CA 94107-1317

Conduit/Tray No: 1301 | Reference: E-49
Size: 41 | Type: RGS conduit
From: PB-LTG | To: PB-LTG
Total Fill (mm2): 346.04 | Remarks:
Allowable Fill (mm2): 534.55
Description of Changes:

Included Cable No.	Conductor Type	Area (mm2)
A-1010-2	3 + 1 Gnd, #6, #8, 600 V, RHH/RHW insulation	212.85
Pull Rope	Soft-Fiber Polyester	0.00
S-1001-2	3 + 1 Gnd, #8, #10, 600 V, RHH/RHW insulation	133.19

Conduit/Tray No: 1302 | Reference: E-49
Size: 41 | Type: RGS conduit
From: PB-LTG | To: PB-LTG
Total Fill (mm2): 411.65 | Remarks:
Allowable Fill (mm2): 534.55
Description of Changes:

Included Cable No.	Conductor Type	Area (mm2)
A-1010-2	3 + 1 Gnd, #6, #8, 600 V, RHH/RHW insulation	212.85
Pull Rope	Soft-Fiber Polyester	0.00
S-1001-2	3 + 1 Gnd, #8, #10, 600 V, RHH/RHW insulation	133.19
UP101-2B	3 + 1 Gnd, #12, #12, 600 V, RHH/RHW insulation	65.61

Conduit/Tray No: 1303 | Reference: E-49
Size: 41 | Type: RGS conduit
From: PB-LTG | To: PB-LTG
Total Fill (mm2): 411.65 | Remarks:
Allowable Fill (mm2): 534.55
Description of Changes:

Included Cable No.	Conductor Type	Area (mm2)
A-1010-2	3 + 1 Gnd, #6, #8, 600 V, RHH/RHW insulation	212.85
Pull Rope	Soft-Fiber Polyester	0.00
S-1001-2	3 + 1 Gnd, #8, #10, 600 V, RHH/RHW insulation	133.19
UP101-2B	3 + 1 Gnd, #12, #12, 600 V, RHH/RHW insulation	65.61

Conduit/Tray No: 1304 | Reference: E-50
Size: 41 | Type: RGS conduit
From: PB-LTG | To: PB-LTG
Total Fill (mm2): 411.65 | Remarks:
Allowable Fill (mm2): 534.55
Description of Changes:

Included Cable No.	Conductor Type	Area (mm2)
A-1010-2	3 + 1 Gnd, #6, #8, 600 V, RHH/RHW insulation	212.85
Pull Rope	Soft-Fiber Polyester	0.00
S-1001-2	3 + 1 Gnd, #8, #10, 600 V, RHH/RHW insulation	133.19
UP101-2B	3 + 1 Gnd, #12, #12, 600 V, RHH/RHW insulation	65.61

Conduit/Tray No: 1305 | Reference: E-50
Size: 41 | Type: RGS conduit
From: PB-LTG | To: PB-LTG
Total Fill (mm2): 411.65 | Remarks:
Allowable Fill (mm2): 534.55
Description of Changes:

Included Cable No.	Conductor Type	Area (mm2)
A-1010-2	3 + 1 Gnd, #6, #8, 600 V, RHH/RHW insulation	212.85
Pull Rope	Soft-Fiber Polyester	0.00
S-1001-2	3 + 1 Gnd, #8, #10, 600 V, RHH/RHW insulation	133.19
UP101-2B	3 + 1 Gnd, #12, #12, 600 V, RHH/RHW insulation	65.61

Conduit/Tray No: 1313 | Reference: E-50
Size: 41 | Type: RGS conduit
From: PB-LTG | To: PB-LTG
Total Fill (mm2): 346.04 | Remarks:
Allowable Fill (mm2): 534.55
Description of Changes:

Included Cable No.	Conductor Type	Area (mm2)
A-1009-2	3 + 1 Gnd, #6, #8, 600 V, RHH/RHW insulation	212.85
Pull Rope	Soft-Fiber Polyester	0.00
S-1002-3A	3 + 1 Gnd, #8, #10, 600 V, RHH/RHW insulation	133.19

Conduit/Tray No: 1315 | Reference: E-50
Size: 41 | Type: RGS conduit
From: PB-LTG | To: PB-LTG
Total Fill (mm2): 346.04 | Remarks:
Allowable Fill (mm2): 534.55
Description of Changes:

Included Cable No.	Conductor Type	Area (mm2)
A-1009-2	3 + 1 Gnd, #6, #8, 600 V, RHH/RHW insulation	212.85
Pull Rope	Soft-Fiber Polyester	0.00
S-1002-3A	3 + 1 Gnd, #8, #10, 600 V, RHH/RHW insulation	133.19

5 ADDED PER ADDENDUM No. 5 DATED JULY 30, 2009

CONDUIT AND TRAY SCHEDULE
YBI TRANSITION STRUCTURES ROADWAY WB
E-284A

REVISED BY | DATE REVISED
JEFFRI HALIM | ELLERY LUCAS
CALCULATED-DESIGNED BY | CHECKED BY
CONSULTANT FUNCTIONAL SUPERVISOR
BEHZAD GOLEMOHAMMADI
STATE OF CALIFORNIA - DEPARTMENT OF TRANSPORTATION
Caltrans

LAST REVISION 00-00-00 | DATE PLOTTED => 28-JUL-2009 | TIME PLOTTED => 06:43

Dist	COUNTY	ROUTE	KILOMETER POST TOTAL PROJECT	SHEET No.	TOTAL SHEETS
04	SF	80	12.7/13.2	403B	806

5 Caltrans Metric

4/10/09
REGISTERED ELECTRICAL ENGINEER

6-23-08
PLANS APPROVAL DATE

REGISTERED PROFESSIONAL ENGINEER FADI WALIEDDINE No. 11465 Exp. 12/31/09 ELECTRICAL STATE OF CALIFORNIA

THE STATE OF CALIFORNIA OR ITS OFFICERS OR AGENTS SHALL NOT BE RESPONSIBLE FOR THE ACCURACY OR COMPLETENESS OF ELECTRONIC COPIES OF THIS PLAN SHEET.

PB AMERICAS, Inc.
A Parsons Brinckerhoff Company
303 Second St., Suite 700N
San Francisco, CA 94107-1317

Conduit/Tray No: 1318 | Reference: E-50
Size: 41 | Type: RGS conduit
From: PB-LTG | To: PB-LTG
Total Fill (mm2): 346.04 | Remarks:
Allowable Fill (mm2): 534.55
Description of Changes:

Included Cable No.	Conductor Type	Area (mm2)
A-1009-2	3 + 1 Gnd, #6, #8, 600 V, RHH/RHW insulation	212.85
Pull Rope	Soft-Fiber Polyester	0.00
S-1002-3A	3 + 1 Gnd, #8, #10, 600 V, RHH/RHW insulation	133.19

Conduit/Tray No: 1319 | Reference: E-51
Size: 41 | Type: RGS conduit
From: PB-LTG | To: PB-LTG
Total Fill (mm2): 346.04 | Remarks:
Allowable Fill (mm2): 534.55
Description of Changes:

Included Cable No.	Conductor Type	Area (mm2)
A-1009-2	3 + 1 Gnd, #6, #8, 600 V, RHH/RHW insulation	212.85
Pull Rope	Soft-Fiber Polyester	0.00
S-1002-3A	3 + 1 Gnd, #8, #10, 600 V, RHH/RHW insulation	133.19

Conduit/Tray No: 1320 | Reference: E-51
Size: 41 | Type: RGS conduit
From: PB-LTG | To: PB-LTG
Total Fill (mm2): 346.04 | Remarks:
Allowable Fill (mm2): 534.55
Description of Changes:

Included Cable No.	Conductor Type	Area (mm2)
A-1009-2	3 + 1 Gnd, #6, #8, 600 V, RHH/RHW insulation	212.85
Pull Rope	Soft-Fiber Polyester	0.00
S-1002-3A	3 + 1 Gnd, #8, #10, 600 V, RHH/RHW insulation	133.19

Conduit/Tray No: 1321 | Reference: E-51
Size: 41 | Type: RGS conduit
From: PB-LTG | To: PB-LTG
Total Fill (mm2): 346.04 | Remarks:
Allowable Fill (mm2): 534.55
Description of Changes:

Included Cable No.	Conductor Type	Area (mm2)
A-1009-2	3 + 1 Gnd, #6, #8, 600 V, RHH/RHW insulation	212.85
Pull Rope	Soft-Fiber Polyester	0.00
S-1002-3A	3 + 1 Gnd, #8, #10, 600 V, RHH/RHW insulation	133.19

Conduit/Tray No: 1422 | Reference: E-51
Size: 41 | Type: RGS conduit
From: PB-LTG | To: PB-LTG
Total Fill (mm2): 212.85 | Remarks:
Allowable Fill (mm2): 534.55
Description of Changes:

Included Cable No.	Conductor Type	Area (mm2)
A-1009-2	3 + 1 Gnd, #6, #8, 600 V, RHH/RHW insulation	212.85
Pull Rope	Soft-Fiber Polyester	0.00

Conduit/Tray No: 1423 | Reference: E-51
Size: 41 | Type: RGS conduit
From: PB-LTG | To: PB-LTG
Total Fill (mm2): 212.85 | Remarks:
Allowable Fill (mm2): 534.55
Description of Changes:

Included Cable No.	Conductor Type	Area (mm2)
A-1009-2	3 + 1 Gnd, #6, #8, 600 V, RHH/RHW insulation	212.85
Pull Rope	Soft-Fiber Polyester	0.00

Conduit/Tray No: 1424 | Reference: E-51
Size: 41 | Type: RGS conduit
From: PB-LTG | To: PB-LTG
Total Fill (mm2): 212.85 | Remarks:
Allowable Fill (mm2): 534.55
Description of Changes:

Included Cable No.	Conductor Type	Area (mm2)
A-1009-2	3 + 1 Gnd, #6, #8, 600 V, RHH/RHW insulation	212.85
Pull Rope	Soft-Fiber Polyester	0.00

5 ADDED PER ADDENDUM No. 5 DATED JULY 30, 2009

CONDUIT AND TRAY SCHEDULE
YBI TRANSITION STRUCTURES ROADWAY WB
E-284B

REVISED BY | DATE REVISED
JEFFRI HALIM | ELLERY LUCAS
CALCULATED-DESIGNED BY | CHECKED BY
CONSULTANT FUNCTIONAL SUPERVISOR
BEHZAD GOLEMOHAMMADI
STATE OF CALIFORNIA - DEPARTMENT OF TRANSPORTATION
Caltrans

LAST REVISION 00-00-00 | DATE PLOTTED => 28-JUL-2009 | TIME PLOTTED => 06:43

Dist	COUNTY	ROUTE	KILOMETER POST TOTAL PROJECT	SHEET No.	TOTAL SHEETS
04	SF	80	12.7/13.2	403C	806

4/10/09
REGISTERED ELECTRICAL ENGINEER

6-23-08
PLANS APPROVAL DATE

REGISTERED PROFESSIONAL ENGINEER FADI WALIEDDINE No. 11465 Exp. 12/31/09 ELECTRICAL STATE OF CALIFORNIA

THE STATE OF CALIFORNIA OR ITS OFFICERS OR AGENTS SHALL NOT BE RESPONSIBLE FOR THE ACCURACY OR COMPLETENESS OF ELECTRONIC COPIES OF THIS PLAN SHEET.

PB AMERICAS, Inc.
A Parsons Brinckerhoff Company
303 Second St., Suite 700N
San Francisco, CA 94107-1317

5 Caltrans Metric

Conduit/Tray No:	1502
Reference:	E-50
Size:	41
Type:	RGS conduit
From:	PB-COM
To:	PB-COM
Total Fill (mm2):	0.00
Allowable Fill (mm2):	534.55
Remarks:	
Description of Changes:	

Included Cable No.	Conductor Type	Area (mm2)
Pull Rope	Soft-Fiber Polyester	0.00

Conduit/Tray No:	1546
Reference:	E-49
Size:	41
Type:	RGS conduit
From:	PB-LTG
To:	PB-LTG
Total Fill (mm2):	346.04
Allowable Fill (mm2):	534.55
Remarks:	
Description of Changes:	

Included Cable No.	Conductor Type	Area (mm2)
A-1010-2	3 + 1 Gnd, #6, #8, 600 V, RHH/RHW insulation	212.85
Pull Rope	Soft-Fiber Polyester	0.00
S-1001-2	3 + 1 Gnd, #8, #10, 600 V, RHH/RHW insulation	133.19

Conduit/Tray No:	1717
Reference:	E-51
Size:	41
Type:	RGS conduit
From:	PB-LTG
To:	PB-LTG
Total Fill (mm2):	266.38
Allowable Fill (mm2):	534.55
Remarks:	
Description of Changes:	

Included Cable No.	Conductor Type	Area (mm2)
A-1006-3A	3 + 1 Gnd, #8, #10, 600 V, RHH/RHW insulation	133.19
Pull Rope	Soft-Fiber Polyester	0.00
S-1022-3A	3 + 1 Gnd, #8, #10, 600 V, RHH/RHW insulation	133.19

Conduit/Tray No:	1718
Reference:	E-51
Size:	41
Type:	RGS conduit
From:	PB-LTG
To:	PB-LTG
Total Fill (mm2):	266.38
Allowable Fill (mm2):	534.55
Remarks:	
Description of Changes:	

Included Cable No.	Conductor Type	Area (mm2)
A-1006-3A	3 + 1 Gnd, #8, #10, 600 V, RHH/RHW insulation	133.19
Pull Rope	Soft-Fiber Polyester	0.00
S-1022-3A	3 + 1 Gnd, #8, #10, 600 V, RHH/RHW insulation	133.19

Conduit/Tray No:	1719
Reference:	E-51
Size:	41
Type:	RGS conduit
From:	PB-LTG
To:	PB-LTG
Total Fill (mm2):	266.38
Allowable Fill (mm2):	534.55
Remarks:	
Description of Changes:	

Included Cable No.	Conductor Type	Area (mm2)
A-1006-3A	3 + 1 Gnd, #8, #10, 600 V, RHH/RHW insulation	133.19
Pull Rope	Soft-Fiber Polyester	0.00
S-1023-2	3 + 1 Gnd, #8, #10, 600 V, RHH/RHW insulation	133.19

Conduit/Tray No:	1804
Reference:	E-52
Size:	41
Type:	RGS conduit
From:	PB-COM
To:	PB-COM
Total Fill (mm2):	98.10
Allowable Fill (mm2):	708.28
Remarks:	
Description of Changes:	

Included Cable No.	Conductor Type	Area (mm2)
1149	1 - 2 pair, shielded #18 with IS/OA, 600 V, PVC jacket	98.10
Pull Rope	Soft-Fiber Polyester	0.00

Conduit/Tray No:	1804A
Reference:	E-50
Size:	41
Type:	RGS conduit
From:	PB-LTG
To:	PB-LTG
Total Fill (mm2):	0.00
Allowable Fill (mm2):	534.55
Remarks:	
Description of Changes:	

Included Cable No.	Conductor Type	Area (mm2)
Pull Rope	Soft-Fiber Polyester	0.00

5 ADDED PER ADDENDUM No. 5 DATED JULY 30, 2009

CONDUIT AND TRAY SCHEDULE
YBI TRANSITION STRUCTURES ROADWAY WB

E-284C

REVISED BY | DATE REVISED
JEFFRI HALIM | ELLERY LUCAS
CALCULATED-DESIGNED BY | CHECKED BY
CONSULTANT FUNCTIONAL SUPERVISOR
BEHZAD GOLEMOHAMMADI
STATE OF CALIFORNIA - DEPARTMENT OF TRANSPORTATION
Caltrans

LAST REVISION 00-00-00 | DATE PLOTTED => 28-JUL-2009 | TIME PLOTTED => 06:43

Dist	COUNTY	ROUTE	KILOMETER POST TOTAL PROJECT	SHEET No.	TOTAL SHEETS
04	SF	80	12.7/13.2	403D	806

4/10/09
REGISTERED ELECTRICAL ENGINEER

6-23-08
PLANS APPROVAL DATE

REGISTERED PROFESSIONAL ENGINEER
FADI WALIEDDINE
No. 11465
Exp. 12/31/09
ELECTRICAL
STATE OF CALIFORNIA

THE STATE OF CALIFORNIA OR ITS OFFICERS OR AGENTS SHALL NOT BE RESPONSIBLE FOR THE ACCURACY OR COMPLETENESS OF ELECTRONIC COPIES OF THIS PLAN SHEET.

PB AMERICAS, Inc.
A Parsons Brinckerhoff Company
303 Second St., Suite 700N
San Francisco, CA 94107-1317

Caltrans Metric

Conduit/Tray No:	1805
Reference:	E-52
Size:	41
Type:	RGS conduit
From:	PB-COM
To:	PB-COM
Total Fill (mm2):	0.00
Remarks:	
Allowable Fill (mm2):	534.55
Description of Changes:	

Included Cable No.	Conductor Type	Area (mm2)
Pull Rope	Soft-Fiber Polyester	0.00

Conduit/Tray No:	1805A
Reference:	E-50
Size:	41
Type:	RGS conduit
From:	PB-LTG
To:	PB-LTG
Total Fill (mm2):	0.00
Remarks:	
Allowable Fill (mm2):	534.55
Description of Changes:	

Included Cable No.	Conductor Type	Area (mm2)
Pull Rope	Soft-Fiber Polyester	0.00

Conduit/Tray No:	1T21W
Reference:	E-64, E-81
Size:	610
Type:	152 mm siderail ladder tray
From:	Electrical Vault #1W
To:	Electrical Vault #1W
Total Fill (mm2):	6260.09
Remarks:	
Allowable Fill (mm2):	16774.16
Description of Changes:	

Included Cable No.	Conductor Type	Area (mm2)
1091	1-3/C + Gnd, #6, 600 V, EPR insulation	324.29
1092	1-3/C + Gnd, #4, 600 V, EPR insulation	366.10
1093	1-3/C + Gnd, #4, 600 V, EPR insulation	366.10
1094	1-3/C + Gnd, #2, 600 V, EPR insulation	527.18
1105	1-3/C + Gnd, #6, 600 V, EPR insulation	324.29
1254-1	1-3/C #16, 600 V, EPR insulation	62.07
A-1005-1	1-3/C + Gnd, #8, 600 V, EPR insulation	262.68
A-1006-1	1-3/C + Gnd, #8, 600 V, EPR insulation	262.68
A-1006-2	1-3/C + Gnd, #8, 600 V, EPR insulation	262.68
A-1007-1	1-3/C + Gnd, #4, 600 V, EPR insulation	366.10
A-1008-1	1-3/C + Gnd, #6, 600 V, EPR insulation	324.29
A-1009-1	1-3/C + Gnd, #6, 600 V, EPR insulation	324.29
S-1002-3	1-3/C + Gnd, #8, 600 V, EPR insulation	262.68
S-1021-1	1-3/C + Gnd, #8, 600 V, EPR insulation	262.68
S-1022-1	1-3/C + Gnd, #8, 600 V, EPR insulation	262.68
S-1022-2	1-3/C + Gnd, #8, 600 V, EPR insulation	262.68
S-1022-3	1-3/C + Gnd, #8, 600 V, EPR insulation	262.68
S-1023-1	1-3/C + Gnd, #6, 600 V, EPR insulation	324.29
S-1024-1	1-3/C + Gnd, #6, 600 V, EPR insulation	324.29
S-2021-1	1-3/C + Gnd, #8, 600 V, EPR insulation	262.68
S-2022-1	1-3/C + Gnd, #8, 600 V, EPR insulation	262.68

Conduit/Tray No:	1T23W
Reference:	E-66, E-83
Size:	610
Type:	152 mm siderail ladder tray
From:	Electrical Vault #3W
To:	Electrical Vault #3W
Total Fill (mm2):	1970.03
Remarks:	
Allowable Fill (mm2):	16774.16
Description of Changes:	

Included Cable No.	Conductor Type	Area (mm2)
1093	1-3/C + Gnd, #4, 600 V, EPR insulation	366.10
1094	1-3/C + Gnd, #2, 600 V, EPR insulation	527.18
1254-1	1-3/C #16, 600 V, EPR insulation	62.07
A-1007-1	1-3/C + Gnd, #4, 600 V, EPR insulation	366.10
A-1008-1	1-3/C + Gnd, #6, 600 V, EPR insulation	324.29
S-1024-1	1-3/C + Gnd, #6, 600 V, EPR insulation	324.29

5 ADDED PER ADDENDUM No. 5 DATED JULY 30, 2009

CONDUIT AND TRAY SCHEDULE
YBI TRANSITION STRUCTURES ROADWAY WB
E-284D

REVISED BY | DATE REVISED
JEFFRI HALIM | ELLERY LUCAS
CALCULATED-DESIGNED BY | CHECKED BY
CONSULTANT FUNCTIONAL SUPERVISOR
BEHZAD GOLEMOHAMMADI
STATE OF CALIFORNIA - DEPARTMENT OF TRANSPORTATION
Caltrans

LAST REVISION 00-00-00 | DATE PLOTTED => 28-JUL-2009 | TIME PLOTTED => 06:44

Dist	COUNTY	ROUTE	KILOMETER POST TOTAL PROJECT	SHEET No.	TOTAL SHEETS
04	SF	80	12.7/13.2	403E	806

4/10/09
REGISTERED ELECTRICAL ENGINEER

6-23-08
PLANS APPROVAL DATE

REGISTERED PROFESSIONAL ENGINEER FADI WALIEDDINE No. 11465 Exp. 12/31/09 ELECTRICAL STATE OF CALIFORNIA

THE STATE OF CALIFORNIA OR ITS OFFICERS OR AGENTS SHALL NOT BE RESPONSIBLE FOR THE ACCURACY OR COMPLETENESS OF ELECTRONIC COPIES OF THIS PLAN SHEET.

PB AMERICAS, Inc.
A Parsons Brinckerhoff Company
303 Second St., Suite 700N
San Francisco, CA 94107-1317

5 Caltrans Metric

Conduit/Tray No: 1T41W | Reference: E-64, E-81
Size: 610 | Type: 152 mm siderail solid bottom tray
From: TOS/COM Vault #1W | To: TOS/COM Vault #1W
Total Fill (mm2): 7375.16 | Remarks:
Allowable Fill (mm2): 16774.16
Description of Changes:

Included Cable No.	Conductor Type	Area (mm2)
1148	1 - 2 pair, shielded #18 with IS/OA, 600 V, PVC jacket	98.10
1169	1 - 2 pair, shielded #18 with IS/OA, 600 V, PVC jacket	98.10
1473-1	50 pair #18, shielded pairs, IS/OS shield 600 V, XLPE insul., PVC jacket	1201.71
1473-2	50 pair #18, shielded pairs, IS/OS shield 600 V, XLPE insul., PVC jacket	1201.71
1474-1	50 pair #18, shielded pairs, IS/OS shield 600 V, XLPE insul., PVC jacket	1201.71
1474-2	50 pair #18, shielded pairs, IS/OS shield 600 V, XLPE insul., PVC jacket	1201.71
1475-1	72 Fiber, single mode fiber optic riser cable	323.65
1475-2	72 Fiber, single mode fiber optic riser cable	323.65
1475-3	72 Fiber, single mode fiber optic riser cable	323.65
2900-111A	4 pair #22, shielded pairs, FEP insulation (Type SSC)	47.42
2900-111B	4 pair #22, shielded pairs, FEP insulation (Type SSC)	47.42
2900-11A	4 pair #22, shielded pairs, FEP insulation (Type SSC)	47.42
2900-11B	4 pair #22, shielded pairs, FEP insulation (Type SSC)	47.42
2900-11C	4 pair #22, shielded pairs, FEP insulation (Type SSC)	47.42
2900-121A	4 pair #22, shielded pairs, FEP insulation (Type SSC)	47.42
2900-121B	4 pair #22, shielded pairs, FEP insulation (Type SSC)	47.42
2900-121C	4 pair #22, shielded pairs, FEP insulation (Type SSC)	47.42
2900-21A	4 pair #22, shielded pairs, FEP insulation (Type SSC)	47.42
2900-21B	4 pair #22, shielded pairs, FEP insulation (Type SSC)	47.42
2900-21C	4 pair #22, shielded pairs, FEP insulation (Type SSC)	47.42
2900-31A	4 pair #22, shielded pairs, FEP insulation (Type SSC)	47.42
2900-31B	4 pair #22, shielded pairs, FEP insulation (Type SSC)	47.42
2900-31C	4 pair #22, shielded pairs, FEP insulation (Type SSC)	47.42
2900-41A	4 pair #22, shielded pairs, FEP insulation (Type SSC)	47.42
2900-41B	4 pair #22, shielded pairs, FEP insulation (Type SSC)	47.42
2900-51A	4 pair #22, shielded pairs, FEP insulation (Type SSC)	47.42
2900-51B	4 pair #22, shielded pairs, FEP insulation (Type SSC)	47.42
2900-51C	4 pair #22, shielded pairs, FEP insulation (Type SSC)	47.42
2900-81A	4 pair #22, shielded pairs, FEP insulation (Type SSC)	47.42
PLW11	12 DLC	452.77

Conduit/Tray No: 4018 | Reference: E-64, E-81
Size: 53 | Type: RGS conduit
From: Electrical Vault #1W | To: PB-LTG
Total Fill (mm2): 525.36 | Remarks: Exposed conduit shall be RGS-PVC coated.
Allowable Fill (mm2): 681.55
Description of Changes:

Included Cable No.	Conductor Type	Area (mm2)
A-1005-1	1-3/C + Gnd, #8, 600 V, EPR insulation	262.68
A-1006-2	1-3/C + Gnd, #8, 600 V, EPR insulation	262.68
Pull Rope	Soft-Fiber Polyester	0.00

Conduit/Tray No: 4920 | Reference: E-65, E-82, E-75
Size: 41 | Type: RGS conduit
From: Electrical Vault #2W | To: PB-LTG
Total Fill (mm2): 262.68 | Remarks:
Allowable Fill (mm2): 708.28
Description of Changes:

Included Cable No.	Conductor Type	Area (mm2)
Pull Rope	Soft-Fiber Polyester	0.00
S-1002-3	1-3/C + Gnd, #8, 600 V, EPR insulation	262.68

Conduit/Tray No: 4962 | Reference: E-65
Size: 53 | Type: RGS-PVC coated conduit
From: Electrical Vault #2W | To: Wireway #2W
Total Fill (mm2): 49.21 | Remarks:
Allowable Fill (mm2): 879.42
Description of Changes:

Included Cable No.	Conductor Type	Area (mm2)
Pull Rope	Soft-Fiber Polyester	0.00
UP102-3	2 + 1 Gnd, #12, #12, 600 V, RHH/RHW insulation	49.21

Conduit/Tray No: 4966 | Reference: E-65
Size: 41 | Type: RGS conduit
From: TOS/COM Vault #2W | To: PB-COM
Total Fill (mm2): 0.00 | Remarks:
Allowable Fill (mm2): 534.55
Description of Changes:

Included Cable No.	Conductor Type	Area (mm2)
Pull Rope	Soft-Fiber Polyester	0.00

Conduit/Tray No: 4981 | Reference: E-66
Size: 53 | Type: RGS-PVC coated conduit
From: Wireway #3W | To: Electrical Vault #3W
Total Fill (mm2): 642.00 | Remarks:
Allowable Fill (mm2): 1165.23
Description of Changes:

Included Cable No.	Conductor Type	Area (mm2)
1094	1-3/C + Gnd, #2, 600 V, EPR insulation	527.18
Pull Rope	Soft-Fiber Polyester	0.00
UP103-2	3 + 1 Gnd, #12, #12, 600 V, RHH/RHW insulation	65.61
UP103-3	2 + 1 Gnd, #12, #12, 600 V, RHH/RHW insulation	49.21

5 **ADDED PER ADDENDUM No. 5 DATED JULY 30, 2009**

CONDUIT AND TRAY SCHEDULE
YBI TRANSITION STRUCTURES ROADWAY WB

E-284E

STATE OF CALIFORNIA - DEPARTMENT OF TRANSPORTATION
Caltrans

CONSULTANT FUNCTIONAL SUPERVISOR: BEHZAD GOLEMOHAMMADI
CALCULATED-DESIGNED BY: JEFFRI HALIM
CHECKED BY: ELLERY LUCAS
REVISED BY | DATE REVISED

LAST REVISION 00-00-00
DATE PLOTTED => 28-JUL-2009
TIME PLOTTED => 06:44

Dist	COUNTY	ROUTE	KILOMETER POST TOTAL PROJECT	SHEET No.	TOTAL SHEETS
04	SF	80	12.7/13.2	403F	806

REGISTERED ELECTRICAL ENGINEER 4/10/09

6-23-08
PLANS APPROVAL DATE

REGISTERED PROFESSIONAL ENGINEER FADI WALIEDDINE No. 11465 Exp. 12/31/09 ELECTRICAL STATE OF CALIFORNIA

THE STATE OF CALIFORNIA OR ITS OFFICERS OR AGENTS SHALL NOT BE RESPONSIBLE FOR THE ACCURACY OR COMPLETENESS OF ELECTRONIC COPIES OF THIS PLAN SHEET.

PB AMERICAS, Inc.
A Parsons Brinckerhoff Company
303 Second St., Suite 700N
San Francisco, CA 94107-1317

5 Caltrans Metric

Conduit/Tray No:	5907
Reference:	E-64
Size:	41
Type:	RGS-PVC coated conduit
From:	480 V Breaker for UP-101
To:	15 kVA Transformer for UP-101
Total Fill (mm2):	324.29
Remarks:	
Allowable Fill (mm2):	702.80
Description of Changes:	

Included Cable No.	Conductor Type	Area (mm2)
1091-1	1-3/C + Gnd, #6, 600 V, EPR insulation	324.29
Pull Rope	Soft-Fiber Polyester	0.00

Conduit/Tray No:	5972
Reference:	E-65
Size:	41
Type:	RGS-PVC coated conduit
From:	Wireway #2W
To:	480 V Breaker for UP-102
Total Fill (mm2):	324.29
Remarks:	
Allowable Fill (mm2):	702.80
Description of Changes:	

Included Cable No.	Conductor Type	Area (mm2)
1092-1	1-3/C + Gnd, #6, 600 V, EPR insulation	324.29
Pull Rope	Soft-Fiber Polyester	0.00

Conduit/Tray No:	5972A
Reference:	E-65
Size:	41
Type:	RGS-PVC coated conduit
From:	Wireway #2W
To:	480 V Breaker for UP-102
Total Fill (mm2):	366.10
Remarks:	
Allowable Fill (mm2):	702.80
Description of Changes:	

Included Cable No.	Conductor Type	Area (mm2)
1092	1-3/C + Gnd, #4, 600 V, EPR insulation	366.10
Pull Rope	Soft-Fiber Polyester	0.00

Conduit/Tray No:	5974
Reference:	E-65
Size:	41
Type:	RGS-PVC coated conduit
From:	Wireway #2W
To:	15 kVA Transformer for UP-102
Total Fill (mm2):	324.29
Remarks:	
Allowable Fill (mm2):	702.80
Description of Changes:	

Included Cable No.	Conductor Type	Area (mm2)
1092-1	1-3/C + Gnd, #6, 600 V, EPR insulation	324.29
Pull Rope	Soft-Fiber Polyester	0.00

Conduit/Tray No:	5991
Reference:	E-66
Size:	41
Type:	RGS-PVC coated conduit
From:	15 KVA Transformer for UP-103
To:	480 V Breaker for UP-103
Total Fill (mm2):	324.29
Remarks:	
Allowable Fill (mm2):	702.80
Description of Changes:	

Included Cable No.	Conductor Type	Area (mm2)
1093-1	1-3/C + Gnd, #6, 600 V, EPR insulation	324.29
Pull Rope	Soft-Fiber Polyester	0.00

Conduit/Tray No:	5994
Reference:	E-66
Size:	41
Type:	RGS-PVC coated conduit
From:	Wireway #3W
To:	480 V Breaker for UP-109
Total Fill (mm2):	527.18
Remarks:	
Allowable Fill (mm2):	702.80
Description of Changes:	

Included Cable No.	Conductor Type	Area (mm2)
1094-1	1-3/C + Gnd, #2, 600 V, EPR insulation	527.18
Pull Rope	Soft-Fiber Polyester	0.00

Conduit/Tray No:	Wireway #2W
Reference:	E-65, E-67
Size:	155
Type:	152 mm x 152 mm Wireway, Nema 4X
From:	Platform #2W
To:	Platform #2W
Total Fill (mm2):	1265.57
Remarks:	
Allowable Fill (mm2):	3548.00
Description of Changes:	

Included Cable No.	Conductor Type	Area (mm2)
1092	1-3/C + Gnd, #4, 600 V, EPR insulation	366.10
1092-1	1-3/C + Gnd, #6, 600 V, EPR insulation	324.29
1092-2	1-4/C + Gnd, #4, 600 V, EPR insulation	476.76
UP102-3	2 + 1 Gnd, #12, #12, 600 V, RHH/RHW insulation	49.21
UP102-5	2 + 1 Gnd, #12, #12, 600 V, RHH/RHW insulation	49.21

5 **ADDED PER ADDENDUM No. 5 DATED JULY 30, 2009**

CONDUIT AND TRAY SCHEDULE
YBI TRANSITION STRUCTURES ROADWAY WB

E-284F

REVISED BY | DATE REVISED
JEFFRI HALIM | ELLERY LUCAS
CALCULATED-DESIGNED BY | CHECKED BY
CONSULTANT FUNCTIONAL SUPERVISOR
BEHZAD GOLEMOHAMMADI

STATE OF CALIFORNIA - DEPARTMENT OF TRANSPORTATION
Caltrans

LAST REVISION 00-00-00 | DATE PLOTTED => 28-JUL-2009 | TIME PLOTTED => 06:44

Dist	COUNTY	ROUTE	KILOMETER POST TOTAL PROJECT	SHEET No.	TOTAL SHEETS
04	SF	80	12.7/13.2	407	806

Caltrans Metric

2/14/08
REGISTERED ELECTRICAL ENGINEER

6-23-08
PLANS APPROVAL DATE

REGISTERED PROFESSIONAL ENGINEER
FADI WALIEDDINE
No. 11465
Exp. 12/31/09
ELECTRICAL
STATE OF CALIFORNIA

THE STATE OF CALIFORNIA OR ITS OFFICERS OR AGENTS SHALL NOT BE RESPONSIBLE FOR THE ACCURACY OR COMPLETENESS OF ELECTRONIC COPIES OF THIS PLAN SHEET.

PB AMERICAS, Inc.
A Parsons Brinckerhoff Company
303 Second St., Suite 700N
San Francisco, CA 94107-1317

Conduit/Tray No:	4910
Reference:	E-81, E-78
Size:	41
Type:	RGS conduit
From:	PB-LTG
To:	PB-LTG
Total Fill (mm2):	0.00
Remarks:	
Allowable Fill (mm2):	534.55
Description of Changes:	

Included Cable No.	Conductor Type	Area (mm2)
Pull Rope	Soft-Fiber Polyester	0.00

Conduit/Tray No:	4911
Reference:	E-28, E-33, E-81, E-78
Size:	41
Type:	RGS conduit
From:	PB-LTG
To:	Manhole-30
Total Fill (mm2):	0.00
Remarks:	
Allowable Fill (mm2):	534.55
Description of Changes:	

Included Cable No.	Conductor Type	Area (mm2)
Pull Rope	Soft-Fiber Polyester	0.00

Conduit/Tray No:	4912
Reference:	E-28, E-33, E-81, E-78
Size:	41
Type:	RGS conduit
From:	PB-LTG
To:	Manhole-30
Total Fill (mm2):	262.68
Remarks:	
Allowable Fill (mm2):	708.28
Description of Changes:	

Included Cable No.	Conductor Type	Area (mm2)
Pull Rope	Soft-Fiber Polyester	0.00
S-1002-2	1-3/C + Gnd, #8, 600 V, EPR insulation	262.68

Conduit/Tray No:	4913
Reference:	E-28, E-33, E-81, E-78
Size:	41
Type:	RGS conduit
From:	PB-LTG
To:	Manhole-30
Total Fill (mm2):	262.68
Remarks:	
Allowable Fill (mm2):	708.28
Description of Changes:	

Included Cable No.	Conductor Type	Area (mm2)
Pull Rope	Soft-Fiber Polyester	0.00
S-1001-1	1-3/C + Gnd, #8, 600 V, EPR insulation	262.68

Conduit/Tray No:	4915
Reference:	E-64, E-81, E-74, E-78
Size:	78
Type:	RGS conduit
From:	PL-W11
To:	TOS/COM Vault #1W
Total Fill (mm2):	452.77
Remarks:	
Allowable Fill (mm2):	2564.19
Description of Changes:	

Included Cable No.	Conductor Type	Area (mm2)
PLW11	12 DLC	452.77
Pull Rope	Soft-Fiber Polyester	0.00

Conduit/Tray No:	4917
Reference:	E-76
Size:	41
Type:	RGS conduit
From:	PB-LTG
To:	PB-LTG
Total Fill (mm2):	65.61
Remarks:	
Allowable Fill (mm2):	534.55
Description of Changes:	

Included Cable No.	Conductor Type	Area (mm2)
Pull Rope	Soft-Fiber Polyester	0.00
UP103-2	3 + 1 Gnd, #12, #12, 600 V, RHH/RHW insulation	65.61

Conduit/Tray No:	4918
Reference:	E-77
Size:	41
Type:	RGS conduit
From:	PB-COM
To:	PB-COM
Total Fill (mm2):	98.10
Remarks:	
Allowable Fill (mm2):	708.28
Description of Changes:	

Included Cable No.	Conductor Type	Area (mm2)
1170	1 - 2 pair, shielded #18 with IS/OA, 600 V, PVC jacket	98.10
Pull Rope	Soft-Fiber Polyester	0.00

5

Conduit/Tray No:	4919
Reference:	E-83, E-76, E-82, E-65
Size:	41
Type:	RGS conduit
From:	Wireway #1W
To:	PB-LTG
Total Fill (mm2):	0.00
Remarks:	
Allowable Fill (mm2):	534.55
Description of Changes:	

Included Cable No.	Conductor Type	Area (mm2)
Pull Rope	Soft-Fiber Polyester	0.00

5 **REVISED PER ADDENDUM No. 5 DATED JULY 30, 2009**

CONDUIT AND TRAY SCHEDULE
YBI TRANSITION STRUCTURES GIRDER WB

E-288

REVISED BY | DATE REVISED
CARMELO RIVERA | ELLERY LUCAS
CALCULATED-DESIGNED BY | CHECKED BY
CONSULTANT FUNCTIONAL SUPERVISOR
BEHZAD GOLEMOHAMMADI
STATE OF CALIFORNIA - DEPARTMENT OF TRANSPORTATION
Caltrans

LAST REVISION 00-00-00 | DATE PLOTTED => 28-JUL-2009 | TIME PLOTTED => 06:44

Dist	COUNTY	ROUTE	KILOMETER POST TOTAL PROJECT	SHEET No.	TOTAL SHEETS
04	SF	80	12.7/13.2	411	806

Caltrans Metric

2/14/08
REGISTERED ELECTRICAL ENGINEER

6-23-08
PLANS APPROVAL DATE

REGISTERED PROFESSIONAL ENGINEER
FADI WALIEDDINE
No. 11465
Exp. 12/31/09
ELECTRICAL
STATE OF CALIFORNIA

THE STATE OF CALIFORNIA OR ITS OFFICERS OR AGENTS SHALL NOT BE RESPONSIBLE FOR THE ACCURACY OR COMPLETENESS OF ELECTRONIC COPIES OF THIS PLAN SHEET.

PB AMERICAS, Inc.
A Parsons Brinckerhoff Company
303 Second St., Suite 700N
San Francisco, CA 94107-1317

Conduit/Tray No: 4953 | Reference: E-74
Size: 41 | Type: RGS conduit
From: JB (Soffit Light 2022-6) | To: JB (Soffit Light 2022-7)
Total Fill (mm2): 133.19 | Remarks:
Allowable Fill (mm2): 534.55
Description of Changes:

Included Cable No.	Conductor Type	Area (mm2)
Pull Rope	Soft-Fiber Polyester	0.00
S-2022-2	3 + 1 Gnd, #8, #10, 600 V, RHH/RHW insulation	133.19

Conduit/Tray No: 4954 | Reference: E-75, E-82
Size: 103 | Type: RGS conduit
From: PB-2A | To: TOS/COM Vault #2W
Total Fill (mm2): 2403.42 | Remarks:
Allowable Fill (mm2): 2576.49
Description of Changes:

Included Cable No.	Conductor Type	Area (mm2)
1473-2	50 pair #18, shielded pairs, IS/OS shield 600 V, XLPE insul., PVC jacket	1201.71
1474-2	50 pair #18, shielded pairs, IS/OS shield 600 V, XLPE insul., PVC jacket	1201.71
Pull Rope	Soft-Fiber Polyester	0.00

Conduit/Tray No: 4955 | Reference: E-74
Size: 41 | Type: RGS conduit
From: JB (Soffitt light 2021-10) | To: JB (Soffitt light 2021-11)
Total Fill (mm2): 133.19 | Remarks:
Allowable Fill (mm2): 534.55
Description of Changes:

Included Cable No.	Conductor Type	Area (mm2)
Pull Rope	Soft-Fiber Polyester	0.00
S-2021-2	3 + 1 Gnd, #8, #10, 600 V, RHH/RHW insulation	133.19

~~Conduit/Tray No: 4956 | Reference: E-83, E-75, E-82~~
~~Size: 103 | Type: RGS conduit~~
~~From: Electrical Vault #2W | To: Electrical Vault #3W~~
~~Total Fill (mm2): 710.65 | Remarks:~~
~~Allowable Fill (mm2): 3324.51~~
~~Description of Changes:~~

Included Cable No.	Conductor Type	Area (mm2)
1254-1	1-3/C #16, 600 V, EPR insulation	62.07
A-1008-1	1-3/C + Gnd, #6, 600 V, EPR insulation	324.29
Pull Rope	Soft-Fiber Polyester	0.00
S-1024-1	1-3/C + Gnd, #6, 600 V, EPR insulation	324.29

5

Conduit/Tray No: 4957 | Reference: E-84, E-75, E-82
Size: 103 | Type: RGS conduit
From: Electrical Vault #2W | To: Electrical Vault #3W
Total Fill (mm2): 893.28 | Remarks:
Allowable Fill (mm2): 2576.49
Description of Changes:

Included Cable No.	Conductor Type	Area (mm2)
1093	1-3/C + Gnd, #4, 600 V, EPR insulation	366.10
1094	1-3/C + Gnd, #2, 600 V, EPR insulation	527.18
Pull Rope	Soft-Fiber Polyester	0.00

Conduit/Tray No: 4959 | Reference: E-65, E-82, E-75
Size: 41 | Type: RGS conduit
From: TOS/COM Vault #2W | To: PB-COM
Total Fill (mm2): 0.00 | Remarks:
Allowable Fill (mm2): 534.55
Description of Changes:

Included Cable No.	Conductor Type	Area (mm2)
Pull Rope	Soft-Fiber Polyester	0.00

~~Conduit/Tray No: 4960 | Reference: E-65, E-82, E-75~~
~~Size: 41 | Type: RGS-PVC coated conduit~~
~~From: Wireway #2W | To: PB-LTG~~
~~Total Fill (mm2): 690.39 | Remarks:~~
~~Allowable Fill (mm2): 702.80~~
~~Description of Changes:~~

Included Cable No.	Conductor Type	Area (mm2)
A-1007-1	1-3/C + Gnd, #4, 600 V, EPR insulation	366.10
A-1009-1	1-3/C + Gnd, #6, 600 V, EPR insulation	324.29
Pull Rope	Soft-Fiber Polyester	0.00

5

5 **REVISED PER ADDENDUM No. 5 DATED JULY 30, 2009**

CONDUIT AND TRAY SCHEDULE
YBI TRANSITION STRUCTURES GIRDER WB

E-292

REVISED BY | DATE REVISED
CARMELO RIVERA | ELLERY LUCAS
CALCULATED-DESIGNED BY | CHECKED BY
CONSULTANT FUNCTIONAL SUPERVISOR
BEHZAD GOLEMOHAMMADI
STATE OF CALIFORNIA - DEPARTMENT OF TRANSPORTATION
Caltrans

LAST REVISION 00-00-00 | DATE PLOTTED => 28-JUL-2009 | TIME PLOTTED => 06:45

Dist	COUNTY	ROUTE	KILOMETER POST TOTAL PROJECT	SHEET No.	TOTAL SHEETS
04	SF	80	12.7/13.2	412	806

Caltrans Metric

2/14/08
REGISTERED ELECTRICAL ENGINEER

6-23-08
PLANS APPROVAL DATE

REGISTERED PROFESSIONAL ENGINEER FADI WALIEDDINE No. 11465 Exp. 12/31/09 ELECTRICAL STATE OF CALIFORNIA

THE STATE OF CALIFORNIA OR ITS OFFICERS OR AGENTS SHALL NOT BE RESPONSIBLE FOR THE ACCURACY OR COMPLETENESS OF ELECTRONIC COPIES OF THIS PLAN SHEET.

PB AMERICAS, Inc.
A Parsons Brinckerhoff Company
303 Second St., Suite 700N
San Francisco, CA 94107-1317

Conduit/Tray No:	4969
Reference:	E-66, E-75
Size:	78
Type:	RGS conduit
From:	PL-W01
To:	TOS/COM Vault #3W
Total Fill (mm2):	316.24
Allowable Fill (mm2):	2564.19
Remarks:	
Description of Changes:	

Included Cable No.	Conductor Type	Area (mm2)
PLW01	10 DLC	316.24
Pull Rope	Soft-Fiber Polyester	0.00

5

Conduit/Tray No:	4970
Reference:	E-83, E-76
Size:	41
Type:	RGS conduit
From:	PB-LTG
To:	Electrical Vault #3E
Total Fill (mm2):	324.29
Allowable Fill (mm2):	708.28
Remarks:	
Description of Changes:	

Included Cable No.	Conductor Type	Area (mm2)
A-1008-1	1-3/C + Gnd, #6, 600 V, EPR insulation	324.29
Pull Rope	Soft-Fiber Polyester	0.00

Conduit/Tray No:	4971
Reference:	E-83, E-66
Size:	41
Type:	RGS-PVC coated conduit
From:	Electrical Vault #3W
To:	TOS Sign CMS-W01
Total Fill (mm2):	450.97
Allowable Fill (mm2):	534.55
Remarks:	
Description of Changes:	

Included Cable No.	Conductor Type	Area (mm2)
Pull Rope	Soft-Fiber Polyester	0.00
UP109-1	3 + 1 Gnd, #2, #6, 600 V, RHH/RHW insulation	410.43
UP109-2	2-1/C #10, 600 V, RHH/RHW insulation	40.54

Conduit/Tray No:	4973
Reference:	E-74
Size:	41
Type:	RGS conduit
From:	PB-COM
To:	PB-COM
Total Fill (mm2):	0.00
Allowable Fill (mm2):	534.55
Remarks:	
Description of Changes:	

Included Cable No.	Conductor Type	Area (mm2)
Pull Rope	Soft-Fiber Polyester	0.00

Conduit/Tray No:	4974
Reference:	E-74
Size:	41
Type:	RGS conduit
From:	PB-LTG
To:	PB-LTG
Total Fill (mm2):	0.00
Allowable Fill (mm2):	534.55
Remarks:	
Description of Changes:	

Included Cable No.	Conductor Type	Area (mm2)
Pull Rope	Soft-Fiber Polyester	0.00

5

Conduit/Tray No:	4977
Reference:	E-75
Size:	41
Type:	RGS conduit
From:	PB-COM
To:	PB-LTG
Total Fill (mm2):	0.00
Allowable Fill (mm2):	534.55
Remarks:	
Description of Changes:	

Included Cable No.	Conductor Type	Area (mm2)
Pull Rope	Soft-Fiber Polyester	0.00

5

Conduit/Tray No:	4978
Reference:	E-75
Size:	41
Type:	RGS conduit
From:	PB-LTG
To:	PB-COM
Total Fill (mm2):	0.00
Allowable Fill (mm2):	534.55
Remarks:	
Description of Changes:	

Included Cable No.	Conductor Type	Area (mm2)
Pull Rope	Soft-Fiber Polyester	0.00

Conduit/Tray No:	4980
Reference:	E-76, E-83
Size:	41
Type:	RGS conduit
From:	PB-COM
To:	TOS/COM Vault #3W
Total Fill (mm2):	0.00
Allowable Fill (mm2):	534.55
Remarks:	
Description of Changes:	

Included Cable No.	Conductor Type	Area (mm2)
Pull Rope	Soft-Fiber Polyester	0.00

Conduit/Tray No:	4984
Reference:	E-66
Size:	53
Type:	RGS-PVC coated conduit
From:	Wireway #3W
To:	Electrical Vault #3W
Total Fill (mm2):	0.00
Allowable Fill (mm2):	1165.23
Remarks:	
Description of Changes:	

Included Cable No.	Conductor Type	Area (mm2)
Pull Rope	Soft-Fiber Polyester	0.00

5 **REVISED PER ADDENDUM No. 5 DATED JULY 30, 2009**

CONDUIT AND TRAY SCHEDULE
YBI TRANSITION STRUCTURES GIRDER WB

E-293

REVISED BY | DATE REVISED
CARMELO RIVERA | ELLERY LUCAS
CALCULATED-DESIGNED BY | CHECKED BY
CONSULTANT FUNCTIONAL SUPERVISOR
BEHZAD GOLEMOHAMMADI
STATE OF CALIFORNIA - DEPARTMENT OF TRANSPORTATION
Caltrans

LAST REVISION 00-00-00 | DATE PLOTTED => 28-JUL-2009 | TIME PLOTTED => 06:45

Dist	COUNTY	ROUTE	KILOMETER POST TOTAL PROJECT	SHEET No.	TOTAL SHEETS
04	SF	80	12.7/13.2	413A	806

5 Caltrans Metric

4/10/09
REGISTERED ELECTRICAL ENGINEER

PLANS APPROVAL DATE

REGISTERED PROFESSIONAL ENGINEER FADI WALIEDDINE No. 11465 Exp. 12/31/09 ELECTRICAL STATE OF CALIFORNIA

THE STATE OF CALIFORNIA OR ITS OFFICERS OR AGENTS SHALL NOT BE RESPONSIBLE FOR THE ACCURACY OR COMPLETENESS OF ELECTRONIC COPIES OF THIS PLAN SHEET.

PB AMERICAS, Inc.
A Parsons Brinckerhoff Company
303 Second St., Suite 700N
San Francisco, CA 94107-1317

Conduit/Tray No:	0271
Reference:	E-75, E-82
Size:	41
Type:	RGS conduit
From:	*0271
To:	600 V Vault 2W
Total Fill (mm2):	0.00
Remarks:	Connect to existing conduit (PL-W12)
Allowable Fill (mm2):	534.55
Description of Changes:	

Included Cable No.	Conductor Type	Area (mm2)
Pull Rope	Soft-Fiber Polyester	0.00

Conduit/Tray No:	0272
Reference:	E-75, E-82
Size:	41
Type:	RGS conduit
From:	*0272
To:	TOS/COM Vault #2W
Total Fill (mm2):	0.00
Remarks:	Connect to existing conduit (PL-W12)
Allowable Fill (mm2):	534.55
Description of Changes:	

Included Cable No.	Conductor Type	Area (mm2)
Pull Rope	Soft-Fiber Polyester	0.00

Conduit/Tray No:	4007
Reference:	E-65
Size:	53
Type:	RGS-PVC coated conduit
From:	TOS/COM Vault #2W
To:	PB-COM
Total Fill (mm2):	0.00
Remarks:	
Allowable Fill (mm2):	879.42
Description of Changes:	

Included Cable No.	Conductor Type	Area (mm2)
Pull Rope	Soft-Fiber Polyester	0.00

Conduit/Tray No:	4011
Reference:	E-81, E-64, E-78
Size:	41
Type:	RGS conduit
From:	TOS/COM Vault #1W
To:	PB-COM
Total Fill (mm2):	0.00
Remarks:	
Allowable Fill (mm2):	534.55
Description of Changes:	

Included Cable No.	Conductor Type	Area (mm2)
Pull Rope	Soft-Fiber Polyester	0.00

Conduit/Tray No:	4219
Reference:	E-78, E-81
Size:	41
Type:	RGS conduit
From:	Stub out at Pier W8L
To:	600 V Vault 1W
Total Fill (mm2):	0.00
Remarks:	Stub out and cap for future use (PL-W12)
Allowable Fill (mm2):	534.55
Description of Changes:	

Included Cable No.	Conductor Type	Area (mm2)
Pull Rope	Soft-Fiber Polyester	0.00

Conduit/Tray No:	4220
Reference:	E-78, E-81
Size:	41
Type:	RGS conduit
From:	Stub out at Pier W8L
To:	TOS/COM Vault #1W
Total Fill (mm2):	0.00
Remarks:	Stub out and cap for future use (PL-W12)
Allowable Fill (mm2):	534.55
Description of Changes:	

Included Cable No.	Conductor Type	Area (mm2)
Pull Rope	Soft-Fiber Polyester	0.00

Conduit/Tray No:	4910A
Reference:	E-81, E-78
Size:	41
Type:	RGS conduit
From:	Manhole-30
To:	PB-LTG
Total Fill (mm2):	324.29
Remarks:	
Allowable Fill (mm2):	708.28
Description of Changes:	

Included Cable No.	Conductor Type	Area (mm2)
A-1010-1	1-3/C + Gnd, #6, 600 V, EPR insulation	324.29
Pull Rope	Soft-Fiber Polyester	0.00

Conduit/Tray No:	4919
Reference:	E-83, E-76
Size:	41
Type:	RGS conduit
From:	Electrical Vault #3W
To:	PB-LTG
Total Fill (mm2):	366.10
Remarks:	
Allowable Fill (mm2):	708.28
Description of Changes:	

Included Cable No.	Conductor Type	Area (mm2)
A-1007-1	1-3/C + Gnd, #4, 600 V, EPR insulation	366.10
Pull Rope	Soft-Fiber Polyester	0.00

5 ADDED PER ADDENDUM No. 5 DATED JULY 30, 2009

CONDUIT AND TRAY SCHEDULE
YBI TRANSITION STRUCTURES GIRDER WB
E-294A

REVISED BY | DATE REVISED
JEFFRI HALIM | ELLERY LUCAS
CALCULATED-DESIGNED BY | CHECKED BY
CONSULTANT FUNCTIONAL SUPERVISOR
BEHZAD GOLEMOHAMMADI
STATE OF CALIFORNIA - DEPARTMENT OF TRANSPORTATION
Caltrans

LAST REVISION 00-00-00 | DATE PLOTTED => 28-JUL-2009 | TIME PLOTTED => 06:45

Dist	COUNTY	ROUTE	KILOMETER POST TOTAL PROJECT	SHEET No.	TOTAL SHEETS
04	SF	80	12.7/13.2	413B	806

4/10/09
REGISTERED ELECTRICAL ENGINEER

PLANS APPROVAL DATE

REGISTERED PROFESSIONAL ENGINEER
FADI WALIEDDINE
No. 11465
Exp. 12/31/09
ELECTRICAL
STATE OF CALIFORNIA

THE STATE OF CALIFORNIA OR ITS OFFICERS OR AGENTS SHALL NOT BE RESPONSIBLE FOR THE ACCURACY OR COMPLETENESS OF ELECTRONIC COPIES OF THIS PLAN SHEET.

PB AMERICAS, Inc.
A Parsons Brinckerhoff Company
303 Second St., Suite 700N
San Francisco, CA 94107-1317

5 Caltrans Metric

Conduit/Tray No:	4956	Reference:	E-83, E-75, E-82
Size:	103	Type:	RGS conduit
From:	Electrical Vault #2W	To:	Electrical Vault #3W
Total Fill (mm2):	1076.75	Remarks:	
Allowable Fill (mm2):	3324.51		
Description of Changes:			

Included Cable No.	Conductor Type	Area (mm2)
1254-1	1-3/C #16, 600 V, EPR insulation	62.07
A-1007-1	1-3/C + Gnd, #4, 600 V, EPR insulation	366.10
A-1008-1	1-3/C + Gnd, #6, 600 V, EPR insulation	324.29
Pull Rope	Soft-Fiber Polyester	0.00
S-1024-1	1-3/C + Gnd, #6, 600 V, EPR insulation	324.29

Conduit/Tray No:	4960	Reference:	E-65, E-82, E-75
Size:	41	Type:	RGS-PVC coated conduit
From:	Electrical Vault #2W	To:	PB-LTG
Total Fill (mm2):	324.29	Remarks:	
Allowable Fill (mm2):	702.80		
Description of Changes:			

Included Cable No.	Conductor Type	Area (mm2)
A-1009-1	1-3/C + Gnd, #6, 600 V, EPR insulation	324.29
Pull Rope	Soft-Fiber Polyester	0.00

Conduit/Tray No:	4970	Reference:	E-83, E-76
Size:	41	Type:	RGS conduit
From:	PB-LTG	To:	Electrical Vault #3W
Total Fill (mm2):	324.29	Remarks:	
Allowable Fill (mm2):	708.28		
Description of Changes:			

Included Cable No.	Conductor Type	Area (mm2)
A-1008-1	1-3/C + Gnd, #6, 600 V, EPR insulation	324.29
Pull Rope	Soft-Fiber Polyester	0.00

Conduit/Tray No:	4977	Reference:	E-76
Size:	41	Type:	RGS conduit
From:	PB-LTG	To:	PB-LTG
Total Fill (mm2):	0.00	Remarks:	
Allowable Fill (mm2):	534.55		
Description of Changes:			

Included Cable No.	Conductor Type	Area (mm2)
Pull Rope	Soft-Fiber Polyester	0.00

Conduit/Tray No:	4977A	Reference:	E-74, E-75
Size:	41	Type:	RGS conduit
From:	PB-LTG	To:	PB-LTG
Total Fill (mm2):	0.00	Remarks:	
Allowable Fill (mm2):	534.55		
Description of Changes:			

Included Cable No.	Conductor Type	Area (mm2)
Pull Rope	Soft-Fiber Polyester	0.00

Conduit/Tray No:	4978	Reference:	E-76
Size:	41	Type:	RGS conduit
From:	PB-COM	To:	PB-COM
Total Fill (mm2):	0.00	Remarks:	
Allowable Fill (mm2):	534.55		
Description of Changes:			

Included Cable No.	Conductor Type	Area (mm2)
Pull Rope	Soft-Fiber Polyester	0.00

Conduit/Tray No:	4978A	Reference:	E-75
Size:	41	Type:	RGS conduit
From:	PB-COM	To:	PB-COM
Total Fill (mm2):	0.00	Remarks:	
Allowable Fill (mm2):	534.55		
Description of Changes:			

Included Cable No.	Conductor Type	Area (mm2)
Pull Rope	Soft-Fiber Polyester	0.00

Conduit/Tray No:	4979	Reference:	E-75, E-82
Size:	78	Type:	RGS conduit
From:	PL-W12 at sta. 53 + 45	To:	TOS/COM Vault #2W
Total Fill (mm2):	0.00	Remarks:	
Allowable Fill (mm2):	1935.24		
Description of Changes:			

Included Cable No.	Conductor Type	Area (mm2)
Pull Rope	Soft-Fiber Polyester	0.00

5 **ADDED PER ADDENDUM No. 5 DATED JULY 30, 2009**

CONDUIT AND TRAY SCHEDULE
YBI TRANSITION STRUCTURES GIRDER WB

E-294B

REVISED BY | DATE REVISED
JEFFRI HALIM | ELLERY LUCAS
CALCULATED-DESIGNED BY | CHECKED BY
CONSULTANT FUNCTIONAL SUPERVISOR
BEHZAD GOLEMOHAMMADI
STATE OF CALIFORNIA - DEPARTMENT OF TRANSPORTATION
Caltrans

LAST REVISION 00-00-00 | DATE PLOTTED => 28-JUL-2009 | TIME PLOTTED => 06:45

Dist	COUNTY	ROUTE	KILOMETER POST TOTAL PROJECT	SHEET No.	TOTAL SHEETS
04	SF	80	12.7/13.2	416	806

Caltrans Metric

2/14/08
REGISTERED ELECTRICAL ENGINEER

6-23-08
PLANS APPROVAL DATE

REGISTERED PROFESSIONAL ENGINEER
FADI WALIEDDINE
No. 11465
Exp. 12/31/09
ELECTRICAL
STATE OF CALIFORNIA

THE STATE OF CALIFORNIA OR ITS OFFICERS OR AGENTS SHALL NOT BE RESPONSIBLE FOR THE ACCURACY OR COMPLETENESS OF ELECTRONIC COPIES OF THIS PLAN SHEET.

PB AMERICAS, Inc.
A Parsons Brinckerhoff Company
303 Second St., Suite 700N
San Francisco, CA 94107-1317

Conduit/Tray No:	2308
Reference:	E-91
Size:	41
Type:	RGS conduit
From:	PB-LTG
To:	PB-LTG
Total Fill (mm2):	0.00
Remarks:	
Allowable Fill (mm2):	534.55
Description of Changes:	

Included Cable No.	Conductor Type	Area (mm2)
Pull Rope	Soft-Fiber Polyester	0.00

5

Conduit/Tray No:	2313
Reference:	E-92
Size:	41
Type:	RGS conduit
From:	PB-LTG
To:	PB-LTG
Total Fill (mm2):	532.96
Remarks:	
Allowable Fill (mm2):	534.55
Description of Changes:	

Included Cable No.	Conductor Type	Area (mm2)
LP217-1,3,5	1-4/C + Gnd, #8, 600 V, EPR insulation	266.48
LP217-2,4,6	1-4/C + Gnd, #8, 600 V, EPR insulation	266.48
Pull Rope	Soft-Fiber Polyester	0.00

Conduit/Tray No:	2314
Reference:	E-92
Size:	41
Type:	RGS conduit
From:	PB-LTG
To:	PB-LTG
Total Fill (mm2):	304.87
Remarks:	
Allowable Fill (mm2):	534.55
Description of Changes:	

Included Cable No.	Conductor Type	Area (mm2)
A-2005-2	3-1/C #8, 600 V, RHH/RHW insulation	110.88
Pull Rope	Soft-Fiber Polyester	0.00
S-2023-2	3 + 1 Gnd, #8, #10, 600 V, RHH/RHW insulation	133.19
UP202-1	2 + 1 Gnd, #10, #10, 600 V, RHH/RHW insulation	60.80

Conduit/Tray No:	2315
Reference:	E-92
Size:	41
Type:	RGS conduit
From:	PB-LTG
To:	PB-LTG
Total Fill (mm2):	304.87
Remarks:	
Allowable Fill (mm2):	534.55
Description of Changes:	

Included Cable No.	Conductor Type	Area (mm2)
A-2005-2	3-1/C #8, 600 V, RHH/RHW insulation	110.88
Pull Rope	Soft-Fiber Polyester	0.00
S-2023-2	3 + 1 Gnd, #8, #10, 600 V, RHH/RHW insulation	133.19
UP202-1	2 + 1 Gnd, #10, #10, 600 V, RHH/RHW insulation	60.80

Conduit/Tray No:	2316
Reference:	E-92, E-93
Size:	41
Type:	RGS conduit
From:	PB-LTG
To:	PB-LTG
Total Fill (mm2):	244.07
Remarks:	
Allowable Fill (mm2):	534.55
Description of Changes:	

Included Cable No.	Conductor Type	Area (mm2)
A-2005-2	3-1/C #8, 600 V, RHH/RHW insulation	110.88
Pull Rope	Soft-Fiber Polyester	0.00
S-2023-2	3 + 1 Gnd, #8, #10, 600 V, RHH/RHW insulation	133.19

Conduit/Tray No:	2321
Reference:	E-93
Size:	41
Type:	RGS conduit
From:	PB-LTG
To:	PB-LTG
Total Fill (mm2):	354.08
Remarks:	
Allowable Fill (mm2):	534.55
Description of Changes:	

Included Cable No.	Conductor Type	Area (mm2)
A-2005-2	3-1/C #8, 600 V, RHH/RHW insulation	110.88
Pull Rope	Soft-Fiber Polyester	0.00
S-2024-2	3 + 1 Gnd, #8, #10, 600 V, RHH/RHW insulation	133.19
UP203-1	2 + 1 Gnd, #10, #10, 600 V, RHH/RHW insulation	60.80
UP203-2	2 + 1 Gnd, #12, #12, 600 V, RHH/RHW insulation	49.21

Conduit/Tray No:	2322
Reference:	E-93
Size:	41
Type:	RGS conduit
From:	PB-LTG
To:	PB-LTG
Total Fill (mm2):	354.08
Remarks:	
Allowable Fill (mm2):	534.55
Description of Changes:	

Included Cable No.	Conductor Type	Area (mm2)
A-2005-2	3-1/C #8, 600 V, RHH/RHW insulation	110.88
Pull Rope	Soft-Fiber Polyester	0.00
S-2024-2	3 + 1 Gnd, #8, #10, 600 V, RHH/RHW insulation	133.19
UP203-1	2 + 1 Gnd, #10, #10, 600 V, RHH/RHW insulation	60.80
UP203-2	2 + 1 Gnd, #12, #12, 600 V, RHH/RHW insulation	49.21

5 **REVISED PER ADDENDUM No. 5 DATED JULY 30, 2009**

CONDUIT AND TRAY SCHEDULE
YBI TRANSITION STRUCTURES ROADWAY EB

E-297

REVISED BY | DATE REVISED
CARMELO RIVERA | ELLERY LUCAS
CALCULATED-DESIGNED BY | CHECKED BY
CONSULTANT FUNCTIONAL SUPERVISOR
BEHZAD GOLEMOHAMMADI
STATE OF CALIFORNIA - DEPARTMENT OF TRANSPORTATION
Caltrans

LAST REVISION 00-00-00 | DATE PLOTTED => 28-JUL-2009 | TIME PLOTTED => 06:46

Dist	COUNTY	ROUTE	KILOMETER POST TOTAL PROJECT	SHEET No.	TOTAL SHEETS
04	SF	80	12.7/13.2	430	806

Caltrans Metric

2/14/08
REGISTERED ELECTRICAL ENGINEER

6-23-08
PLANS APPROVAL DATE

REGISTERED PROFESSIONAL ENGINEER
FADI WALIEDDINE
No. 11465
Exp. 12/31/09
ELECTRICAL
STATE OF CALIFORNIA

THE STATE OF CALIFORNIA OR ITS OFFICERS OR AGENTS SHALL NOT BE RESPONSIBLE FOR THE ACCURACY OR COMPLETENESS OF ELECTRONIC COPIES OF THIS PLAN SHEET.

PB AMERICAS, Inc.
A Parsons Brinckerhoff Company
303 Second St., Suite 700N
San Francisco, CA 94107-1317

Conduit/Tray No:	2852
Reference:	E-93
Size:	41
Type:	RGS conduit
From:	PB-LTG
To:	PB-LTG
Total Fill (mm2):	0.00
Remarks:	
Allowable Fill (mm2):	534.55
Description of Changes:	

Included Cable No.	Conductor Type	Area (mm2)
Pull Rope	Soft-Fiber Polyester	0.00

Conduit/Tray No:	2853
Reference:	E-93
Size:	41
Type:	RGS conduit
From:	PB-LTG
To:	PB-LTG
Total Fill (mm2):	0.00
Remarks:	
Allowable Fill (mm2):	534.55
Description of Changes:	

Included Cable No.	Conductor Type	Area (mm2)
Pull Rope	Soft-Fiber Polyester	0.00

Conduit/Tray No:	2854
Reference:	E-93
Size:	41
Type:	RGS conduit
From:	PB-LTG
To:	PB-LTG
Total Fill (mm2):	0.00
Remarks:	
Allowable Fill (mm2):	534.55
Description of Changes:	

Included Cable No.	Conductor Type	Area (mm2)
Pull Rope	Soft-Fiber Polyester	0.00

Conduit/Tray No:	2855
Reference:	E-93
Size:	41
Type:	RGS conduit
From:	PB-LTG
To:	PB-LTG
Total Fill (mm2):	0.00
Remarks:	
Allowable Fill (mm2):	534.55
Description of Changes:	

Included Cable No.	Conductor Type	Area (mm2)
Pull Rope	Soft-Fiber Polyester	0.00

Conduit/Tray No:	2856
Reference:	E-93
Size:	41
Type:	RGS conduit
From:	PB-LTG
To:	PB-LTG
Total Fill (mm2):	0.00
Remarks:	
Allowable Fill (mm2):	534.55
Description of Changes:	

Included Cable No.	Conductor Type	Area (mm2)
Pull Rope	Soft-Fiber Polyester	0.00

Conduit/Tray No:	2891
Reference:	E-91
Size:	41
Type:	RGS conduit
From:	PB-LTG
To:	PB-LTG
Total Fill (mm2):	0.00
Remarks:	
Allowable Fill (mm2):	534.55
Description of Changes:	

Included Cable No.	Conductor Type	Area (mm2)
Pull Rope	Soft-Fiber Polyester	0.00

Conduit/Tray No:	2T21E
Reference:	E-130
Size:	610
Type:	6" siderail ladder tray
From:	Electrical Vault #1E
To:	Electrical Vault #1E
Total Fill (mm2):	5946.53
Remarks:	
Allowable Fill (mm2):	16774.16
Description of Changes:	

Included Cable No.	Conductor Type	Area (mm2)
2091	1-3/C + Gnd, #4, 600 V, EPR insulation	366.10
2092	1-3/C + Gnd, #4, 600 V, EPR insulation	366.10
2093	1-3/C + Gnd, #4, 600 V, EPR insulation	366.10
2094	1-3/C + Gnd, #2, 600 V, EPR insulation	527.18
2100	1-3/C + Gnd, #4, 600 V, EPR insulation	366.10
2101	1-3/C + Gnd, #4, 600 V, EPR insulation	366.10
2102	1-3/C + Gnd, #4, 600 V, EPR insulation	366.10
2910-1	1-3/C #16, 600 V, EPR insulation	62.07
A-2005-1	1-3/C + Gnd, #8, 600 V, EPR insulation	262.68
A-2007-1	1-3/C + Gnd, #6, 600 V, EPR insulation	324.29
A-2008-1	1-3/C + Gnd, #4, 600 V, EPR insulation	366.10
A-2009-1	1-3/C + Gnd, #6, 600 V, EPR insulation	324.29
S-2023-1	1-3/C + Gnd, #6, 600 V, EPR insulation	324.29
S-2024-1	1-3/C + Gnd, #6, 600 V, EPR insulation	324.29
S-2041-1	1-3/C + Gnd, #6, 600 V, EPR insulation	324.29
S-2041-2	1-3/C + Gnd, #8, 600 V, EPR insulation	262.68
S-2041-3	1-3/C + Gnd, #8, 600 V, EPR insulation	262.68
S-2042-1	1-3/C + Gnd, #6, 600 V, EPR insulation	324.29
UP202-8	2 + 1 Gnd, #10, #10, 600 V, RHH/RHW insulation	60.80

5

5 REVISED PER ADDENDUM No. 5 DATED JULY 30, 2009

CONDUIT AND TRAY SCHEDULE
YBI TRANSITION STRUCTURES ROADWAY EB

E-311

STATE OF CALIFORNIA - DEPARTMENT OF TRANSPORTATION
Caltrans

CONSULTANT FUNCTIONAL SUPERVISOR: BEHZAD GOLEMOHAMMADI
CALCULATED-DESIGNED BY: CARMELO RIVERA
CHECKED BY: ELLERY LUCAS
REVISED BY / DATE REVISED

LAST REVISION 00-00-00
DATE PLOTTED => 28-JUL-2009
TIME PLOTTED => 06:46

Dist	COUNTY	ROUTE	KILOMETER POST TOTAL PROJECT	SHEET No.	TOTAL SHEETS
04	SF	80	12.7/13.2	431	806

Caltrans Metric

2/14/08
REGISTERED ELECTRICAL ENGINEER

6-23-08
PLANS APPROVAL DATE

REGISTERED PROFESSIONAL ENGINEER
FADI WALIEDDINE
No. 11465
Exp. 12/31/09
ELECTRICAL
STATE OF CALIFORNIA

THE STATE OF CALIFORNIA OR ITS OFFICERS OR AGENTS SHALL NOT BE RESPONSIBLE FOR THE ACCURACY OR COMPLETENESS OF ELECTRONIC COPIES OF THIS PLAN SHEET.

PB AMERICAS, Inc.
A Parsons Brinckerhoff Company
303 Second St., Suite 700N
San Francisco, CA 94107-1317

Conduit/Tray No:	2T22E	Reference:	E-106, E-131
Size:	610	Type:	6" siderail ladder tray
From:	Electrical Vault #2E	To:	Electrical Vault #2E
Total Fill (mm2):	5284.46	Remarks:	
Allowable Fill (mm2):	16774.16		

Description of Changes:

Included Cable No.	Conductor Type	Area (mm2)
2092	1-3/C + Gnd, #4, 600 V, EPR insulation	366.10
2093	1-3/C + Gnd, #4, 600 V, EPR insulation	366.10
2094	1-3/C + Gnd, #2, 600 V, EPR insulation	527.18
2101	1-3/C + Gnd, #4, 600 V, EPR insulation	366.10
2102	1-3/C + Gnd, #4, 600 V, EPR insulation	366.10
2254-1	1-3/C #16, 600 V, EPR insulation	62.07
2254-2	1-3/C #16, 600 V, EPR insulation	62.07
2910-1	1-3/C #16, 600 V, EPR insulation	62.07
A-2005-1	1-3/C + Gnd, #8, 600 V, EPR insulation	262.68
A-2007-1	1-3/C + Gnd, #6, 600 V, EPR insulation	324.29
A-2008-1	1-3/C + Gnd, #4, 600 V, EPR insulation	366.10
A-2009-1	1-3/C + Gnd, #6, 600 V, EPR insulation	324.29
LP217-1,3,5	1-4/C + Gnd, #8, 600 V, EPR insulation	266.48
LP217-2,4,6	1-4/C + Gnd, #8, 600 V, EPR insulation	266.48
S-2023-1	1-3/C + Gnd, #6, 600 V, EPR insulation	324.29
S-2024-1	1-3/C + Gnd, #6, 600 V, EPR insulation	324.29
S-2041-2	1-3/C + Gnd, #8, 600 V, EPR insulation	262.68
S-2042-1	1-3/C + Gnd, #6, 600 V, EPR insulation	324.29
UP202-8	2 + 1 Gnd, #10, #10, 600 V, RHH/RHW insulation	60.80

5

Conduit/Tray No:	2T23E	Reference:	E-107, E-132
Size:	610	Type:	6" siderail ladder tray
From:	Electrical Vault #3E	To:	Electrical Vault #3E
Total Fill (mm2):	2718.15	Remarks:	
Allowable Fill (mm2):	16774.16		

Description of Changes:

Included Cable No.	Conductor Type	Area (mm2)
2093	1-3/C + Gnd, #4, 600 V, EPR insulation	366.10
2094	1-3/C + Gnd, #2, 600 V, EPR insulation	527.18
2102	1-3/C + Gnd, #4, 600 V, EPR insulation	366.10
2254-1	1-3/C #16, 600 V, EPR insulation	62.07
2254-2	1-3/C #16, 600 V, EPR insulation	62.07
2910-1	1-3/C #16, 600 V, EPR insulation	62.07
A-2008-1	1-3/C + Gnd, #4, 600 V, EPR insulation	366.10
LP218-1,3,5	1-4/C + Gnd, #8, 600 V, EPR insulation	266.48
LP218-2,4,6	1-4/C + Gnd, #8, 600 V, EPR insulation	266.48
S-2024-1	1-3/C + Gnd, #6, 600 V, EPR insulation	324.29
UP203-2	2 + 1 Gnd, #12, #12, 600 V, RHH/RHW insulation	49.21

5

Conduit/Tray No:	2T41E	Reference:	E-130
Size:	610	Type:	6" siderail solid bottom tray
From:	TOS/COM Vault #1E	To:	TOS/COM Vault #1E
Total Fill (mm2):	7331.46	Remarks:	
Allowable Fill (mm2):	16774.16		

Description of Changes:

Included Cable No.	Conductor Type	Area (mm2)
2143	1 - 2 pair, shielded #18 with IS/OA, 600 V, PVC jacket	98.10
2170	1 - 2 pair, shielded #18 with IS/OA, 600 V, PVC jacket	98.10
2473-1	50 pair #18, shielded pairs, IS/OS shield 600 V, XLPE insul., PVC jacket	1201.71
2473-2	50 pair #18, shielded pairs, IS/OS shield 600 V, XLPE insul., PVC jacket	1201.71
2474-1	50 pair #18, shielded pairs, IS/OS shield 600 V, XLPE insul., PVC jacket	1201.71
2474-2	50 pair #18, shielded pairs, IS/OS shield 600 V, XLPE insul., PVC jacket	1201.71
2475-1	72 Fiber, single mode fiber optic riser cable	323.65
2475-2	72 Fiber, single mode fiber optic riser cable	323.65
2475-4	72 Fiber, single mode fiber optic riser cable	323.65
2900-111A	4 pair #22, shielded pairs, FEP insulation (Type SSC)	47.42
2900-111B	4 pair #22, shielded pairs, FEP insulation (Type SSC)	47.42
2900-11A	4 pair #22, shielded pairs, FEP insulation (Type SSC)	47.42
2900-11B	4 pair #22, shielded pairs, FEP insulation (Type SSC)	47.42
2900-11C	4 pair #22, shielded pairs, FEP insulation (Type SSC)	47.42
2900-121A	4 pair #22, shielded pairs, FEP insulation (Type SSC)	47.42
2900-121B	4 pair #22, shielded pairs, FEP insulation (Type SSC)	47.42
2900-121C	4 pair #22, shielded pairs, FEP insulation (Type SSC)	47.42
2900-131A	4 pair #22, shielded pairs, FEP insulation (Type SSC)	47.42
2900-21A	4 pair #22, shielded pairs, FEP insulation (Type SSC)	47.42
2900-21B	4 pair #22, shielded pairs, FEP insulation (Type SSC)	47.42
2900-21C	4 pair #22, shielded pairs, FEP insulation (Type SSC)	47.42
2900-31A	4 pair #22, shielded pairs, FEP insulation (Type SSC)	47.42
2900-31B	4 pair #22, shielded pairs, FEP insulation (Type SSC)	47.42
2900-31C	4 pair #22, shielded pairs, FEP insulation (Type SSC)	47.42
2900-41A	4 pair #22, shielded pairs, FEP insulation (Type SSC)	47.42
2900-41B	4 pair #22, shielded pairs, FEP insulation (Type SSC)	47.42
2900-51A	4 pair #22, shielded pairs, FEP insulation (Type SSC)	47.42
2900-51B	4 pair #22, shielded pairs, FEP insulation (Type SSC)	47.42
2900-51C	4 pair #22, shielded pairs, FEP insulation (Type SSC)	47.42
2900-61A	4 pair #22, shielded pairs, FEP insulation (Type SSC)	47.42
2900-71A	4 pair #22, shielded pairs, FEP insulation (Type SSC)	47.42
2900-81A	4 pair #22, shielded pairs, FEP insulation (Type SSC)	47.42
2900-91A	4 pair #22, shielded pairs, FEP insulation (Type SSC)	47.42
2900-91B	4 pair #22, shielded pairs, FEP insulation (Type SSC)	47.42
2900-91C	4 pair #22, shielded pairs, FEP insulation (Type SSC)	47.42
2910-2	4 pair #24, overall shielded, 300 V, PE insulation (Type IC)	77.13
2910-3	4 pair #22, shielded pairs, FEP insulation (Type SSC)	47.42

5 REVISED PER ADDENDUM No. 5 DATED JULY 30, 2009

CONDUIT AND TRAY SCHEDULE
YBI TRANSITION STRUCTURES ROADWAY EB

E-312

STATE OF CALIFORNIA - DEPARTMENT OF TRANSPORTATION
Caltrans

CONSULTANT FUNCTIONAL SUPERVISOR: BEHZAD GOLEMOHAMMADI
CALCULATED-DESIGNED BY: CARMELO RIVERA
CHECKED BY: ELLERY LUCAS
REVISED BY / DATE REVISED

LAST REVISION 00-00-00
DATE PLOTTED => 28-JUL-2009
TIME PLOTTED => 06:46

Dist	COUNTY	ROUTE	KILOMETER POST TOTAL PROJECT	SHEET No.	TOTAL SHEETS
04	SF	80	12.7/13.2	432	806

Caltrans Metric

2/14/08
REGISTERED ELECTRICAL ENGINEER

6-23-08
PLANS APPROVAL DATE

REGISTERED PROFESSIONAL ENGINEER
FADI WALIEDDINE
No. 11465
Exp. 12/31/09
ELECTRICAL
STATE OF CALIFORNIA

THE STATE OF CALIFORNIA OR ITS OFFICERS OR AGENTS SHALL NOT BE RESPONSIBLE FOR THE ACCURACY OR COMPLETENESS OF ELECTRONIC COPIES OF THIS PLAN SHEET.

PB AMERICAS, Inc.
A Parsons Brinckerhoff Company
303 Second St., Suite 700N
San Francisco, CA 94107-1317

Conduit/Tray No: 2T42E | Reference: E-106, E-131
Size: 610 | Type: 6" siderail solid bottom tray
From: TOS/COM Vault #2E | To: TOS/COM Vault #2E
Total Fill (mm2): 6767.69 | Remarks:
Allowable Fill (mm2): 16774.16
Description of Changes:

Included Cable No.	Conductor Type	Area (mm2)
2142	1 - 2 pair, shielded #18 with IS/OA, 600 V, PVC jacket	98.10
2143	1 - 2 pair, shielded #18 with IS/OA, 600 V, PVC jacket	98.10
2170	1 - 2 pair, shielded #18 with IS/OA, 600 V, PVC jacket	98.10
2473-2	50 pair #18, shielded pairs, IS/OS shield 600 V, XLPE insul., PVC jacket	1201.71
2473-3	50 pair #18, shielded pairs, IS/OS shield 600 V, XLPE insul., PVC jacket	1201.71
2474-2	50 pair #18, shielded pairs, IS/OS shield 600 V, XLPE insul., PVC jacket	1201.71
2474-3	50 pair #18, shielded pairs, IS/OS shield 600 V, XLPE insul., PVC jacket	1201.71
2475-2	72 Fiber, single mode fiber optic riser cable	323.65
2475-3	72 Fiber, single mode fiber optic riser cable	323.65
2475-4	72 Fiber, single mode fiber optic riser cable	323.65
2900-101A	4 pair #22, shielded pairs, FEP insulation (Type SSC)	47.42
2900-101B	4 pair #22, shielded pairs, FEP insulation (Type SSC)	47.42
2900-131A	4 pair #22, shielded pairs, FEP insulation (Type SSC)	47.42
2900-61A	4 pair #22, shielded pairs, FEP insulation (Type SSC)	47.42
2900-71A	4 pair #22, shielded pairs, FEP insulation (Type SSC)	47.42
2900-91A	4 pair #22, shielded pairs, FEP insulation (Type SSC)	47.42
2900-91B	4 pair #22, shielded pairs, FEP insulation (Type SSC)	47.42
2900-91C	4 pair #22, shielded pairs, FEP insulation (Type SSC)	47.42
PLE02A	10 DLC	316.24

Conduit/Tray No: 2T43E | Reference: E-107, E-132
Size: 610 | Type: 6" siderail solid bottom tray
From: TOS/COM Vault #3E | To: TOS/COM Vault #3E
Total Fill (mm2): 3822.48 | Remarks:
Allowable Fill (mm2): 16774.16
Description of Changes:

Included Cable No.	Conductor Type	Area (mm2)
2142	1 - 2 pair, shielded #18 with IS/OA, 600 V, PVC jacket	98.10
2143	1 - 2 pair, shielded #18 with IS/OA, 600 V, PVC jacket	98.10
2144	1 - 2 pair, shielded #18 with IS/OA, 600 V, PVC jacket	98.10
2170	1 - 2 pair, shielded #18 with IS/OA, 600 V, PVC jacket	98.10
2473-3	50 pair #18, shielded pairs, IS/OS shield 600 V, XLPE insul., PVC jacket	1201.71
2474-3	50 pair #18, shielded pairs, IS/OS shield 600 V, XLPE insul., PVC jacket	1201.71
2475-3	72 Fiber, single mode fiber optic riser cable	323.65
2475-4	72 Fiber, single mode fiber optic riser cable	323.65
2900-101A	4 pair #22, shielded pairs, FEP insulation (Type SSC)	47.42
2900-101B	4 pair #22, shielded pairs, FEP insulation (Type SSC)	47.42
2900-131A	4 pair #22, shielded pairs, FEP insulation (Type SSC)	47.42
2900-61A	4 pair #22, shielded pairs, FEP insulation (Type SSC)	47.42
2900-71A	4 pair #22, shielded pairs, FEP insulation (Type SSC)	47.42
2900-91A	4 pair #22, shielded pairs, FEP insulation (Type SSC)	47.42
2900-91B	4 pair #22, shielded pairs, FEP insulation (Type SSC)	47.42
2900-91C	4 pair #22, shielded pairs, FEP insulation (Type SSC)	47.42

5

Conduit/Tray No: 5007 | Reference: E-106
Size: 27 | Type: RGS-PVC coated conduit
From: Controller Cabinet TOS-01EW | To: Controller Cabinet TOS-01EA
Total Fill (mm2): 30.19 | Remarks:
Allowable Fill (mm2): 303.46
Description of Changes:

Included Cable No.	Conductor Type	Area (mm2)
2475-1C	12 Fiber, single mode fiber optic cable	30.19
Pull Rope	Soft-Fiber Polyester	0.00

Conduit/Tray No: 5008 | Reference: E-106
Size: 41 | Type: RGS conduit
From: Control Cabinet TOS-02EA | To: PB-2B (TOS/COM)
Total Fill (mm2): 316.24 | Remarks:
Allowable Fill (mm2): 534.55
Description of Changes:

Included Cable No.	Conductor Type	Area (mm2)
PLE02A	10 DLC	316.24
Pull Rope	Soft-Fiber Polyester	0.00

Conduit/Tray No: 5009 | Reference: E-105
Size: 41 | Type: RGS conduit
From: Controller Cabinet TOS-01EA | To: PB-2B (TOS-COM)
Total Fill (mm2): 0.00 | Remarks:
Allowable Fill (mm2): 534.55
Description of Changes:

Included Cable No.	Conductor Type	Area (mm2)
Pull Rope	Soft-Fiber Polyester	0.00

CONDUIT AND TRAY SCHEDULE
YBI TRANSITION STRUCTURES ROADWAY EB

5 REVISED PER ADDENDUM No. 5 DATED JULY 30, 2009

E-313

STATE OF CALIFORNIA - DEPARTMENT OF TRANSPORTATION
Caltrans

CONSULTANT FUNCTIONAL SUPERVISOR: BEHZAD GOLEMOHAMMADI
CALCULATED-DESIGNED BY: CARMELO RIVERA
CHECKED BY: ELLERY LUCAS
REVISED BY | DATE REVISED

LAST REVISION 00-00-00 | DATE PLOTTED => 28-JUL-2009 | TIME PLOTTED => 06:46

Dist	COUNTY	ROUTE	KILOMETER POST TOTAL PROJECT	SHEET No.	TOTAL SHEETS
04	SF	80	12.7/13.2	436	806

REGISTERED ELECTRICAL ENGINEER 2/14/08

6-23-08
PLANS APPROVAL DATE

REGISTERED PROFESSIONAL ENGINEER FADI WALIEDDINE No. 11465 Exp. 12/31/09 ELECTRICAL STATE OF CALIFORNIA

THE STATE OF CALIFORNIA OR ITS OFFICERS OR AGENTS SHALL NOT BE RESPONSIBLE FOR THE ACCURACY OR COMPLETENESS OF ELECTRONIC COPIES OF THIS PLAN SHEET.

PB AMERICAS, Inc.
A Parsons Brinckerhoff Company
303 Second St., Suite 700N
San Francisco, CA 94107-1317

Conduit/Tray No:	5063
Reference:	E-107
Size:	78
Type:	RGS-PVC coated conduit
From:	Panel UP-209
To:	Wireway #3E
Total Fill (mm2):	0.00
Remarks:	
Allowable Fill (mm2):	1935.24
Description of Changes:	

Included Cable No.	Conductor Type	Area (mm2)
Pull Rope	Soft-Fiber Polyester	0.00

Conduit/Tray No:	5064
Reference:	E-107
Size:	78
Type:	RGS-PVC coated conduit
From:	Panel UP-209
To:	Wireway #3E
Total Fill (mm2):	0.00
Remarks:	
Allowable Fill (mm2):	1935.24
Description of Changes:	

Included Cable No.	Conductor Type	Area (mm2)
Pull Rope	Soft-Fiber Polyester	0.00

Conduit/Tray No:	5065
Reference:	E-107
Size:	27
Type:	RGS-PVC coated conduit
From:	Splice Cabinet TOS-03ES
To:	Controller Cabinet TOS-03EA
Total Fill (mm2):	30.19
Remarks:	
Allowable Fill (mm2):	303.46
Description of Changes:	

Included Cable No.	Conductor Type	Area (mm2)
2475-1A	12 Fiber, single mode fiber optic cable	30.19
Pull Rope	Soft-Fiber Polyester	0.00

Conduit/Tray No:	5066
Reference:	E-107
Size:	53
Type:	RGS-PVC coated conduit
From:	Remote Terminal Unit RTU #9E
To:	COM-03E
Total Fill (mm2):	317.80
Remarks:	
Allowable Fill (mm2):	684.55
Description of Changes:	

Included Cable No.	Conductor Type	Area (mm2)
2474-3A	1 - 6 pair, shielded #18 with overall shield , 600 V, PVC jacket	158.90
2474-3B	1 - 6 pair, shielded #18 with overall shield , 600 V, PVC jacket	158.90
Pull Rope	Soft-Fiber Polyester	0.00

Conduit/Tray No:	5072
Reference:	E-107
Size:	53
Type:	RGS-PVC coated conduit
From:	Remote Terminal Unit RTU #9E
To:	PB-2B
Total Fill (mm2):	392.40
Remarks:	
Allowable Fill (mm2):	879.42
Description of Changes:	

Included Cable No.	Conductor Type	Area (mm2)
2142	1 - 2 pair, shielded #18 with IS/OA, 600 V, PVC jacket	98.10
2143	1 - 2 pair, shielded #18 with IS/OA, 600 V, PVC jacket	98.10
2144	1 - 2 pair, shielded #18 with IS/OA, 600 V, PVC jacket	98.10
2170	1 - 2 pair, shielded #18 with IS/OA, 600 V, PVC jacket	98.10
Pull Rope	Soft-Fiber Polyester	0.00

Conduit/Tray No:	5081
Reference:	E-130
Size:	53
Type:	RGS conduit
From:	2T21E
To:	PB-2J
Total Fill (mm2):	849.65
Remarks:	
Allowable Fill (mm2):	879.42
Description of Changes:	

Included Cable No.	Conductor Type	Area (mm2)
Pull Rope	Soft-Fiber Polyester	0.00
S-2041-1	1-3/C + Gnd, #6, 600 V, EPR insulation	324.29
S-2041-2	1-3/C + Gnd, #8, 600 V, EPR insulation	262.68
S-2041-3	1-3/C + Gnd, #8, 600 V, EPR insulation	262.68

Conduit/Tray No:	5401
Reference:	E-107
Size:	53
Type:	RGS-PVC coated conduit
From:	480 V Breaker for UP-209
To:	Wireway #3E
Total Fill (mm2):	527.18
Remarks:	
Allowable Fill (mm2):	1165.23
Description of Changes:	

Included Cable No.	Conductor Type	Area (mm2)
2094	1-3/C + Gnd, #2, 600 V, EPR insulation	527.18
Pull Rope	Soft-Fiber Polyester	0.00

Conduit/Tray No:	5402
Reference:	E-107
Size:	41
Type:	RGS-PVC coated conduit
From:	25 KVA Transformer for UP-209
To:	480 V Breaker for UP-209
Total Fill (mm2):	527.18
Remarks:	
Allowable Fill (mm2):	702.80
Description of Changes:	

Included Cable No.	Conductor Type	Area (mm2)
2094-1	1-3/C + Gnd, #2, 600 V, EPR insulation	527.18
Pull Rope	Soft-Fiber Polyester	0.00

5

5 **REVISED PER ADDENDUM No. 5 DATED JULY 30, 2009**

CONDUIT AND TRAY SCHEDULE
YBI TRANSITION STRUCTURES ROADWAY EB

E-317

STATE OF CALIFORNIA - DEPARTMENT OF TRANSPORTATION
Caltrans

CONSULTANT FUNCTIONAL SUPERVISOR: BEHZAD GOLEMOHAMMADI
CALCULATED-DESIGNED BY: CARMELO RIVERA
CHECKED BY: ELLERY LUCAS
REVISED BY
DATE REVISED

LAST REVISION 00-00-00
DATE PLOTTED => 28-JUL-2009
TIME PLOTTED => 06:47

Dist	COUNTY	ROUTE	KILOMETER POST TOTAL PROJECT	SHEET No.	TOTAL SHEETS
04	SF	80	12.7/13.2	439	806

Caltrans Metric

2/14/08
REGISTERED ELECTRICAL ENGINEER

6-23-08
PLANS APPROVAL DATE

REGISTERED PROFESSIONAL ENGINEER FADI WALIEDDINE No. 11465 Exp. 12/31/09 ELECTRICAL STATE OF CALIFORNIA

THE STATE OF CALIFORNIA OR ITS OFFICERS OR AGENTS SHALL NOT BE RESPONSIBLE FOR THE ACCURACY OR COMPLETENESS OF ELECTRONIC COPIES OF THIS PLAN SHEET.

PB AMERICAS, Inc.
A Parsons Brinckerhoff Company
303 Second St., Suite 700N
San Francisco, CA 94107-1317

Conduit/Tray No:	5580
Reference:	E-107, E-132
Size:	78
Type:	RGS-PVC coated conduit
From:	COM-03E
To:	TOS/COM Vault #3E
Total Fill (mm2):	1201.71
Remarks:	
Allowable Fill (mm2):	2564.19
Description of Changes:	

Included Cable No.	Conductor Type	Area (mm2)
2474-3	50 pair #18, shielded pairs, IS/OS shield 600 V, XLPE insul., PVC jacket	1201.71
Pull Rope	Soft-Fiber Polyester	0.00

Conduit/Tray No:	5581
Reference:	E-107, E-132
Size:	78
Type:	RGS-PVC coated conduit
From:	COM-03E
To:	TOS/COM Vault #3E
Total Fill (mm2):	0.00
Remarks:	
Allowable Fill (mm2):	1935.24
Description of Changes:	

Included Cable No.	Conductor Type	Area (mm2)
Pull Rope	Soft-Fiber Polyester	0.00

Conduit/Tray No:	5582
Reference:	E-107, E-132
Size:	78
Type:	RGS-PVC coated conduit
From:	Telephone Terminal Box TEL-03E
To:	TOS/COM Vault #3E
Total Fill (mm2):	1201.71
Remarks:	
Allowable Fill (mm2):	2564.19
Description of Changes:	

Included Cable No.	Conductor Type	Area (mm2)
2473-3	50 pair #18, shielded pairs, IS/OS shield 600 V, XLPE insul., PVC jacket	1201.71
Pull Rope	Soft-Fiber Polyester	0.00

Conduit/Tray No:	5583
Reference:	E-107, E-132
Size:	78
Type:	RGS-PVC coated conduit
From:	Telephone Terminal Box TEL-03E
To:	TOS/COM Vault #3E
Total Fill (mm2):	745.72
Remarks:	
Allowable Fill (mm2):	2564.19
Description of Changes:	

Included Cable No.	Conductor Type	Area (mm2)
CMSE01	Harness #4	569.34
CMSE02	Harness #5	176.38
Pull Rope	Soft-Fiber Polyester	0.00

Conduit/Tray No:	5584
Reference:	E-106
Size:	41
Type:	RGS-PVC coated conduit
From:	480 V Breaker for LP-217
To:	15 KVA Transformer for LP-217
Total Fill (mm2):	262.68
Remarks:	
Allowable Fill (mm2):	702.80
Description of Changes:	

Included Cable No.	Conductor Type	Area (mm2)
2101-1	1-3/C + Gnd, #8, 600 V, EPR insulation	262.68
Pull Rope	Soft-Fiber Polyester	0.00

Conduit/Tray No:	5585
Reference:	E-106
Size:	41
Type:	RGS-PVC coated conduit
From:	15 KVA Transformer for LP-217
To:	Wireway #2E
Total Fill (mm2):	476.76
Remarks:	
Allowable Fill (mm2):	702.80
Description of Changes:	

Included Cable No.	Conductor Type	Area (mm2)
2101-2	1-4/C + Gnd, #4, 600 V, EPR insulation	476.76
Pull Rope	Soft-Fiber Polyester	0.00

Conduit/Tray No:	5586
Reference:	E-107
Size:	41
Type:	RGS-PVC coated conduit
From:	480 V Breaker for UP-203
To:	Wireway #3E
Total Fill (mm2):	366.10
Remarks:	
Allowable Fill (mm2):	702.80
Description of Changes:	

Included Cable No.	Conductor Type	Area (mm2)
2093	1-3/C + Gnd, #4, 600 V, EPR insulation	366.10
Pull Rope	Soft-Fiber Polyester	0.00

5

Conduit/Tray No:	5587
Reference:	E-107
Size:	41
Type:	RGS-PVC coated conduit
From:	480 V Breaker for UP-203
To:	15 KVA Transformer for UP-203
Total Fill (mm2):	262.68
Remarks:	
Allowable Fill (mm2):	702.80
Description of Changes:	

Included Cable No.	Conductor Type	Area (mm2)
2093-1	1-3/C + Gnd, #8, 600 V, EPR insulation	262.68
Pull Rope	Soft-Fiber Polyester	0.00

5 **REVISED PER ADDENDUM No. 5 DATED JULY 30, 2009**

CONDUIT AND TRAY SCHEDULE
YBI TRANSITION STRUCTURES ROADWAY EB

E-320

REVISED BY | DATE REVISED
CARMELO RIVERA | ELLERY LUCAS
CALCULATED-DESIGNED BY | CHECKED BY
CONSULTANT FUNCTIONAL SUPERVISOR
BEHZAD GOLEMOHAMMADI
STATE OF CALIFORNIA - DEPARTMENT OF TRANSPORTATION
Caltrans

LAST REVISION 00-00-00 | DATE PLOTTED => 28-JUL-2009 | TIME PLOTTED => 06:47

Dist	COUNTY	ROUTE	KILOMETER POST TOTAL PROJECT	SHEET No.	TOTAL SHEETS
04	SF	80	12.7/13.2	443	806

Caltrans Metric

2/14/08
REGISTERED ELECTRICAL ENGINEER

6-23-08
PLANS APPROVAL DATE

REGISTERED PROFESSIONAL ENGINEER FADI WALIEDDINE No. 11465 Exp. 12/31/09 ELECTRICAL STATE OF CALIFORNIA

THE STATE OF CALIFORNIA OR ITS OFFICERS OR AGENTS SHALL NOT BE RESPONSIBLE FOR THE ACCURACY OR COMPLETENESS OF ELECTRONIC COPIES OF THIS PLAN SHEET.

PB AMERICAS, Inc.
A Parsons Brinckerhoff Company
303 Second St., Suite 700N
San Francisco, CA 94107-1317

~~Conduit/Tray No: 5954 | Reference: E-107, E-132~~
~~Size: 78 | Type: RGS-PVC coated conduit~~
~~From: TOS/COM Vault #3E | To: PB-2B (TOS/COM)~~
~~Total Fill (mm2): 0.00 | Remarks:~~
~~Allowable Fill (mm2): 1935.24~~
~~Description of Changes:~~

Included Cable No.	Conductor Type	Area (mm2)
Pull Rope	Soft-Fiber Polyester	0.00

~~Conduit/Tray No: 5955 | Reference: E-107, E-132~~
~~Size: 78 | Type: RGS-PVC coated conduit~~
~~From: TOS/COM Vault #3E | To: PB-2B (TOS/COM)~~
~~Total Fill (mm2): 294.30 | Remarks:~~
~~Allowable Fill (mm2): 1935.24~~
~~Description of Changes:~~

Included Cable No.	Conductor Type	Area (mm2)
2142	1 - 2 pair, shielded #18 with IS/OA, 600 V, PVC jacket	98.10
2144	1 - 2 pair, shielded #18 with IS/OA, 600 V, PVC jacket	98.10
2170	1 - 2 pair, shielded #18 with IS/OA, 600 V, PVC jacket	98.10
Pull Rope	Soft-Fiber Polyester	0.00

Conduit/Tray No: 5956 | Reference: E-107, E-132
Size: 78 | Type: RGS-PVC coated conduit
From: TOS/COM Vault #3E | To: Splice Cabinet TOS-03ES
Total Fill (mm2): 647.30 | Remarks:
Allowable Fill (mm2): 1499.81
Description of Changes:

Included Cable No.	Conductor Type	Area (mm2)
2475-3	72 Fiber, single mode fiber optic riser cable	323.65
2475-4	72 Fiber, single mode fiber optic riser cable	323.65
Pull Rope	Soft-Fiber Polyester	0.00

Conduit/Tray No: 5957 | Reference: E-107, E-132
Size: 78 | Type: RGS-PVC coated conduit
From: TOS/COM Vault #3E | To: PB-2B (TOS/COM)
Total Fill (mm2): 0.00 | Remarks:
Allowable Fill (mm2): 1935.24
Description of Changes:

Included Cable No.	Conductor Type	Area (mm2)
Pull Rope	Soft-Fiber Polyester	0.00

Conduit/Tray No: 5998 | Reference: E105
Size: 41 | Type: RGS-PVC coated conduit
From: Wireway #1E | To: 480 V Breaker for UP-201
Total Fill (mm2): 366.10 | Remarks:
Allowable Fill (mm2): 702.80
Description of Changes:

Included Cable No.	Conductor Type	Area (mm2)
2091	1-3/C + Gnd, #4, 600 V, EPR insulation	366.10
Pull Rope	Soft-Fiber Polyester	0.00

5

Conduit/Tray No: 5999 | Reference: E105
Size: 41 | Type: RGS-PVC coated conduit
From: 480 V Breaker for UP-201 | To: 15 KVA Transformer for UP-201
Total Fill (mm2): 262.68 | Remarks:
Allowable Fill (mm2): 702.80
Description of Changes:

Included Cable No.	Conductor Type	Area (mm2)
2091-1	1-3/C + Gnd, #8, 600 V, EPR insulation	262.68
Pull Rope	Soft-Fiber Polyester	0.00

Conduit/Tray No: 7100 | Reference: E-90, E-91
Size: 41 | Type: RGS conduit
From: PB-COM | To: PB-COM
Total Fill (mm2): 0.00 | Remarks:
Allowable Fill (mm2): 534.55
Description of Changes:

Included Cable No.	Conductor Type	Area (mm2)
Pull Rope	Soft-Fiber Polyester	0.00

Conduit/Tray No: 7101 | Reference: E-90
Size: 41 | Type: RGS conduit
From: PB-COM | To: End of conduit 7101
Total Fill (mm2): 0.00 | Remarks: Stub out conduit West of Bent #48 & cap.
Allowable Fill (mm2): 534.55
Description of Changes:

Included Cable No.	Conductor Type	Area (mm2)
-		0.00

Conduit/Tray No: 7102 | Reference: E-90, E-91
Size: 41 | Type: RGS conduit
From: PB-COM | To: PB-COM
Total Fill (mm2): 0.00 | Remarks:
Allowable Fill (mm2): 534.55
Description of Changes:

Included Cable No.	Conductor Type	Area (mm2)
Pull Rope	Soft-Fiber Polyester	0.00

5 **REVISED PER ADDENDUM No. 5 DATED JULY 30, 2009**

CONDUIT AND TRAY SCHEDULE
YBI TRANSITION STRUCTURES ROADWAY EB

E-324

STATE OF CALIFORNIA - DEPARTMENT OF TRANSPORTATION
Caltrans

CONSULTANT FUNCTIONAL SUPERVISOR: BEHZAD GOLEMOHAMMADI
CALCULATED-DESIGNED BY: ELLERY LUCAS
CHECKED BY: CARMELO RIVERA
REVISED BY | DATE REVISED

LAST REVISION 00-00-00 | DATE PLOTTED => 28-JUL-2009 | TIME PLOTTED => 06:47

Dist	COUNTY	ROUTE	KILOMETER POST TOTAL PROJECT	SHEET No.	TOTAL SHEETS
04	SF	80	12.7/13.2	447A	806

Caltrans Metric

5

4/10/09
REGISTERED ELECTRICAL ENGINEER

PLANS APPROVAL DATE

REGISTERED PROFESSIONAL ENGINEER
FADI WALIEDDINE
No. 11465
Exp. 12/31/09
ELECTRICAL
STATE OF CALIFORNIA

THE STATE OF CALIFORNIA OR ITS OFFICERS OR AGENTS SHALL NOT BE RESPONSIBLE FOR THE ACCURACY OR COMPLETENESS OF ELECTRONIC COPIES OF THIS PLAN SHEET.

PB AMERICAS, Inc.
A Parsons Brinckerhoff Company
303 Second St., Suite 700N
San Francisco, CA 94107-1317

Conduit/Tray No: 2313 | Reference: E-92
Size: 53 | Type: RGS conduit
From: PB-LTG | To: PB-LTG
Total Fill (mm2): 532.96 | Remarks:
Allowable Fill (mm2): 681.55
Description of Changes:

Included Cable No.	Conductor Type	Area (mm2)
LP217-1,3,5	1-4/C + Gnd, #8, 600 V, EPR insulation	266.48
LP217-2,4,6	1-4/C + Gnd, #8, 600 V, EPR insulation	266.48
Pull Rope	Soft-Fiber Polyester	0.00

Conduit/Tray No: 2T21E | Reference: E-130
Size: 610 | Type: 152 mm siderail ladder tray
From: Electrical Vault #1E | To: Electrical Vault #1E
Total Fill (mm2): 6086.80 | Remarks:
Allowable Fill (mm2): 16774.16
Description of Changes:

Included Cable No.	Conductor Type	Area (mm2)
2091	1-3/C + Gnd, #4, 600 V, EPR insulation	366.10
2092	1-3/C + Gnd, #4, 600 V, EPR insulation	366.10
2093	1-3/C + Gnd, #4, 600 V, EPR insulation	366.10
2094	1-3/C + Gnd, #2, 600 V, EPR insulation	527.18
2100	1-3/C + Gnd, #4, 600 V, EPR insulation	366.10
2101	1-3/C + Gnd, #4, 600 V, EPR insulation	366.10
2102	1-3/C + Gnd, #4, 600 V, EPR insulation	366.10
2910-1	1-3/C #16, 600 V, EPR insulation	62.07
A-2005-1	1-3/C + Gnd, #8, 600 V, EPR insulation	262.68
A-2007-1	1-3/C + Gnd, #6, 600 V, EPR insulation	324.29
A-2008-1	1-3/C + Gnd, #4, 600 V, EPR insulation	366.10
A-2009-1	1-3/C + Gnd, #8, 600 V, EPR insulation	262.68
A-2010-1	1-3/C + Gnd, #8, 600 V, EPR insulation	262.68
S-2023-1	1-3/C + Gnd, #6, 600 V, EPR insulation	324.29
S-2024-1	1-3/C + Gnd, #6, 600 V, EPR insulation	324.29
S-2041-1	1-3/C + Gnd, #6, 600 V, EPR insulation	324.29
S-2041-2	1-3/C + Gnd, #8, 600 V, EPR insulation	262.68
S-2041-3	1-3/C + Gnd, #8, 600 V, EPR insulation	262.68
S-2042-1	1-3/C + Gnd, #6, 600 V, EPR insulation	324.29

Conduit/Tray No: 2T22E | Reference: E-106, E-131
Size: 610 | Type: 152 mm siderail ladder tray
From: Electrical Vault #2E | To: Electrical Vault #2E
Total Fill (mm2): 5424.73 | Remarks:
Allowable Fill (mm2): 16774.16
Description of Changes:

Included Cable No.	Conductor Type	Area (mm2)
2092	1-3/C + Gnd, #4, 600 V, EPR insulation	366.10
2093	1-3/C + Gnd, #4, 600 V, EPR insulation	366.10
2094	1-3/C + Gnd, #2, 600 V, EPR insulation	527.18
2101	1-3/C + Gnd, #4, 600 V, EPR insulation	366.10
2102	1-3/C + Gnd, #4, 600 V, EPR insulation	366.10
2254-1	1-3/C #16, 600 V, EPR insulation	62.07
2254-2	1-3/C #16, 600 V, EPR insulation	62.07
2910-1	1-3/C #16, 600 V, EPR insulation	62.07
A-2005-1	1-3/C + Gnd, #8, 600 V, EPR insulation	262.68
A-2007-1	1-3/C + Gnd, #6, 600 V, EPR insulation	324.29
A-2008-1	1-3/C + Gnd, #4, 600 V, EPR insulation	366.10
A-2009-1	1-3/C + Gnd, #8, 600 V, EPR insulation	262.68
A-2010-1	1-3/C + Gnd, #8, 600 V, EPR insulation	262.68
LP217-1,3,5	1-4/C + Gnd, #8, 600 V, EPR insulation	266.48
LP217-2,4,6	1-4/C + Gnd, #8, 600 V, EPR insulation	266.48
S-2023-1	1-3/C + Gnd, #6, 600 V, EPR insulation	324.29
S-2024-1	1-3/C + Gnd, #6, 600 V, EPR insulation	324.29
S-2041-2	1-3/C + Gnd, #8, 600 V, EPR insulation	262.68
S-2042-1	1-3/C + Gnd, #6, 600 V, EPR insulation	324.29

5 **ADDED PER ADDENDUM No. 5 DATED JULY 30, 2009**

CONDUIT AND TRAY SCHEDULE
YBI TRANSITION STRUCTURES ROADWAY EB
E-328A

REVISED BY | DATE REVISED
JEFFRI HALIM | ELLERY LUCAS
CALCULATED-DESIGNED BY | CHECKED BY
CONSULTANT FUNCTIONAL SUPERVISOR
BEHZAD GOLEMOHAMMADI
STATE OF CALIFORNIA - DEPARTMENT OF TRANSPORTATION
Caltrans

LAST REVISION 00-00-00 | DATE PLOTTED => 28-JUL-2009 | TIME PLOTTED => 06:47

Dist	COUNTY	ROUTE	KILOMETER POST TOTAL PROJECT	SHEET No.	TOTAL SHEETS
04	SF	80	12.7/13.2	447	806

Caltrans Metric

2/14/08
REGISTERED ELECTRICAL ENGINEER

6-23-08
PLANS APPROVAL DATE

REGISTERED PROFESSIONAL ENGINEER
FADI WALIEDDINE
No. 11465
Exp. 12/31/09
ELECTRICAL
STATE OF CALIFORNIA

THE STATE OF CALIFORNIA OR ITS OFFICERS OR AGENTS SHALL NOT BE RESPONSIBLE FOR THE ACCURACY OR COMPLETENESS OF ELECTRONIC COPIES OF THIS PLAN SHEET.

PB AMERICAS, Inc.
A Parsons Brinckerhoff Company
303 Second St., Suite 700N
San Francisco, CA 94107-1317

Conduit/Tray No: Wireway #1E
Reference: E-105, E-108
Size: 203.2
Type: 8" x 8" wireway, Nema 4X
From: Platform #1E
To: Platform #1E
Total Fill (mm2): 2060.10
Remarks:
Allowable Fill (mm2): 8258.05
Description of Changes:

Included Cable No.	Conductor Type	Area (mm2)
2091	1-3/C + Gnd, #4, 600 V, EPR insulation	366.10
2091-2	1-4/C + Gnd, #4, 600 V, EPR insulation	476.76
2100	1-3/C + Gnd, #4, 600 V, EPR insulation	366.10
2100-2	1-4/C + Gnd, #4, 600 V, EPR insulation	476.76
2254-1	1-3/C #16, 600 V, EPR insulation	62.07
2910-1	1-3/C #16, 600 V, EPR insulation	62.07
UP201-10	2 + 1 Gnd, #12, #12, 600 V, RHH/RHW insulation	49.21
UP201-12	2 + 1 Gnd, #12, #12, 600 V, RHH/RHW insulation	49.21
UP201-5	2 + 1 Gnd, #12, #12, 600 V, RHH/RHW insulation	49.21
UP201-7	1-3/C #12, 600 V, EPR insulation	102.61

Conduit/Tray No: Wireway #2E
Reference: E-106, E-108
Size: 203.2
Type: 8" x 8" wireway, Nema 4X
From: Platform #2E
To: Platform #2E
Total Fill (mm2): 2577.97
Remarks:
Allowable Fill (mm2): 8258.05
Description of Changes:

Included Cable No.	Conductor Type	Area (mm2)
2092	1-3/C + Gnd, #4, 600 V, EPR insulation	366.10
2092-2	1-4/C + Gnd, #4, 600 V, EPR insulation	476.76
2101	1-3/C + Gnd, #4, 600 V, EPR insulation	366.10
2101-2	1-4/C + Gnd, #4, 600 V, EPR insulation	476.76
2254-2	1-3/C #16, 600 V, EPR insulation	62.07
LP217-1,3,5	1-4/C + Gnd, #8, 600 V, EPR insulation	266.48
LP217-2,4,6	1-4/C + Gnd, #8, 600 V, EPR insulation	266.48
UP202-1	2 + 1 Gnd, #10, #10, 600 V, RHH/RHW insulation	60.80
UP202-10	2 + 1 Gnd, #10, #10, 600 V, RHH/RHW insulation	60.80
UP202-12	3 + 1 Gnd, #12, #12, 600 V, RHH/RHW insulation	65.61
UP202-5	2 + 1 Gnd, #12, #12, 600 V, RHH/RHW insulation	49.21
UP202-8	2 + 1 Gnd, #10, #10, 600 V, RHH/RHW insulation	60.80

Conduit/Tray No: Wireway #3E
Reference: E-107, E-108
Size: 203.2
Type: 8" x 8" wireway, Nema 4X
From: Platform #3E
To: Platform #3E
Total Fill (mm2): 5678.89
Remarks:
Allowable Fill (mm2): 8258.05
Description of Changes:

Included Cable No.	Conductor Type	Area (mm2)
2093	1-3/C + Gnd, #4, 600 V, EPR insulation	366.10
2093-2	1-4/C + Gnd, #4, 600 V, EPR insulation	476.76
2094	1-3/C + Gnd, #2, 600 V, EPR insulation	527.18
2094-1	1-3/C + Gnd, #2, 600 V, EPR insulation	527.18
2094-1	1-3/C + Gnd, #2, 600 V, EPR insulation	527.18
2094-2	1-3/C + Gnd, #1/0, 600 V, EPR insulation	754.18
2102	1-3/C + Gnd, #4, 600 V, EPR insulation	366.10
2102-2	1-4/C + Gnd, #4, 600 V, EPR insulation	476.76
2254-1	1-3/C #16, 600 V, EPR insulation	62.07
2254-2	1-3/C #16, 600 V, EPR insulation	62.07
2254-4	1-3/C #16, 600 V, EPR insulation	62.07
2910-1	1-3/C #16, 600 V, EPR insulation	62.07
LP218-1,3,5	1-4/C + Gnd, #8, 600 V, EPR insulation	266.48
LP218-2,4,6	1-4/C + Gnd, #8, 600 V, EPR insulation	266.48
UP203-1	2 + 1 Gnd, #10, #10, 600 V, RHH/RHW insulation	60.80
UP203-11	1-2/C + Gnd, #12, 600 V, EPR insulation	102.61
UP203-2	2 + 1 Gnd, #12, #12, 600 V, RHH/RHW insulation	49.21
UP203-5	2 + 1 Gnd, #12, #12, 600 V, RHH/RHW insulation	49.21
UP203-9	1-2/C + Gnd, #12, 600 V, EPR insulation	102.61
UP209-1, 3	3 + 1 Gnd, #2, #6, 600 V, RHH/RHW insulation	410.43
UP209-2	2-1/C #10, 600 V, RHH/RHW insulation	40.54
UP209-4	2 + 1 Gnd, #10, #10, 600 V, RHH/RHW insulation	60.80

5

5 REVISED PER ADDENDUM No. 5 DATED JULY 30, 2009

CONDUIT AND TRAY SCHEDULE
YBI TRANSITION STRUCTURES ROADWAY EB

E-328

REVISED BY | DATE REVISED
CARMELO RIVERA | ELLERY LUCAS
CALCULATED-DESIGNED BY | CHECKED BY
SUPERVISOR: BEHZAD GOLEMOHAMMADI
CONSULTANT FUNCTIONAL SUPERVISOR
STATE OF CALIFORNIA - DEPARTMENT OF TRANSPORTATION
Caltrans

LAST REVISION 00-00-00 | DATE PLOTTED => 28-JUL-2009 | TIME PLOTTED => 06:47

Dist	COUNTY	ROUTE	KILOMETER POST TOTAL PROJECT	SHEET No.	TOTAL SHEETS
04	SF	80	12.7/13.2	447B	806

Caltrans Metric

5

4/10/09
REGISTERED ELECTRICAL ENGINEER

PLANS APPROVAL DATE

REGISTERED PROFESSIONAL ENGINEER
FADI WALIEDDINE
No. 11465
Exp. 12/31/09
ELECTRICAL
STATE OF CALIFORNIA

THE STATE OF CALIFORNIA OR ITS OFFICERS OR AGENTS SHALL NOT BE RESPONSIBLE FOR THE ACCURACY OR COMPLETENESS OF ELECTRONIC COPIES OF THIS PLAN SHEET.

PB AMERICAS, Inc.
A Parsons Brinckerhoff Company
303 Second St., Suite 700N
San Francisco, CA 94107-1317

Conduit/Tray No: 2T23E | Reference: E-107, E-132
Size: 610 | Type: 152 mm siderail ladder tray
From: Electrical Vault #3E | To: Electrical Vault #3E
Total Fill (mm2): 2668.94 | Remarks:
Allowable Fill (mm2): 16774.16
Description of Changes:

Included Cable No.	Conductor Type	Area (mm2)
2093	1-3/C + Gnd, #4, 600 V, EPR insulation	366.10
2094	1-3/C + Gnd, #2, 600 V, EPR insulation	527.18
2102	1-3/C + Gnd, #4, 600 V, EPR insulation	366.10
2254-1	1-3/C #16, 600 V, EPR insulation	62.07
2254-2	1-3/C #16, 600 V, EPR insulation	62.07
2910-1	1-3/C #16, 600 V, EPR insulation	62.07
A-2008-1	1-3/C + Gnd, #4, 600 V, EPR insulation	366.10
LP218-1,3,5	1-4/C + Gnd, #8, 600 V, EPR insulation	266.48
LP218-2,4,6	1-4/C + Gnd, #8, 600 V, EPR insulation	266.48
S-2024-1	1-3/C + Gnd, #6, 600 V, EPR insulation	324.29

Conduit/Tray No: 2T43E | Reference: E-107, E-132
Size: 610 | Type: 152 mm siderail solid bottom tray
From: TOS/COM Vault #3E | To: TOS/COM Vault #3E
Total Fill (mm2): 4568.20 | Remarks:
Allowable Fill (mm2): 16774.16
Description of Changes:

Included Cable No.	Conductor Type	Area (mm2)
2142	1 - 2 pair, shielded #18 with IS/OA, 600 V, PVC jacket	98.10
2143	1 - 2 pair, shielded #18 with IS/OA, 600 V, PVC jacket	98.10
2144	1 - 2 pair, shielded #18 with IS/OA, 600 V, PVC jacket	98.10
2170	1 - 2 pair, shielded #18 with IS/OA, 600 V, PVC jacket	98.10
2473-3	50 pair #18, shielded pairs, IS/OS shield 600 V, XLPE insul., PVC jacket	1201.71
2474-3	50 pair #18, shielded pairs, IS/OS shield 600 V, XLPE insul., PVC jacket	1201.71
2475-3	72 Fiber, single mode fiber optic riser cable	323.65
2475-4	72 Fiber, single mode fiber optic riser cable	323.65
2900-101A	4 pair #22, shielded pairs, FEP insulation (Type SSC)	47.42
2900-101B	4 pair #22, shielded pairs, FEP insulation (Type SSC)	47.42
2900-131A	4 pair #22, shielded pairs, FEP insulation (Type SSC)	47.42
2900-61A	4 pair #22, shielded pairs, FEP insulation (Type SSC)	47.42
2900-71A	4 pair #22, shielded pairs, FEP insulation (Type SSC)	47.42
2900-91A	4 pair #22, shielded pairs, FEP insulation (Type SSC)	47.42
2900-91B	4 pair #22, shielded pairs, FEP insulation (Type SSC)	47.42
2900-91C	4 pair #22, shielded pairs, FEP insulation (Type SSC)	47.42
CMSE01	Harness #4	569.34
CMSE02	Harness #5	176.38

Conduit/Tray No: 5402 | Reference: E-107
Size: 41 | Type: RGS-PVC coated conduit
From: Wireway #3E | To: 480 V Breaker for UP-209
Total Fill (mm2): 527.18 | Remarks:
Allowable Fill (mm2): 702.80
Description of Changes:

Included Cable No.	Conductor Type	Area (mm2)
2094-1	1-3/C + Gnd, #2, 600 V, EPR insulation	527.18
Pull Rope	Soft-Fiber Polyester	0.00

Conduit/Tray No: 5583 | Reference: E-107, E-132
Size: 78 | Type: RGS-PVC coated conduit
From: Telephone Terminal Box TEL-03E | To: TOS/COM Vault #3E
Total Fill (mm2): 0.00 | Remarks:
Allowable Fill (mm2): 1935.24
Description of Changes:

Included Cable No.	Conductor Type	Area (mm2)
Pull Rope	Soft-Fiber Polyester	0.00

Conduit/Tray No: 5954 | Reference: E-107, E-132
Size: 78 | Type: RGS-PVC coated conduit
From: TOS/COM Vault #3E | To: PB-2B (TOS/COM)
Total Fill (mm2): 745.72 | Remarks:
Allowable Fill (mm2): 1499.81
Description of Changes:

Included Cable No.	Conductor Type	Area (mm2)
CMSE01	Harness #4	569.34
CMSE02	Harness #5	176.38
Pull Rope	Soft-Fiber Polyester	0.00

Conduit/Tray No: 5955 | Reference: E-107, E-132
Size: 78 | Type: RGS-PVC coated conduit
From: TOS/COM Vault #3E | To: PB-2B (TOS/COM)
Total Fill (mm2): 392.40 | Remarks:
Allowable Fill (mm2): 1935.24
Description of Changes:

Included Cable No.	Conductor Type	Area (mm2)
2142	1 - 2 pair, shielded #18 with IS/OA, 600 V, PVC jacket	98.10
2143	1 - 2 pair, shielded #18 with IS/OA, 600 V, PVC jacket	98.10
2144	1 - 2 pair, shielded #18 with IS/OA, 600 V, PVC jacket	98.10
2170	1 - 2 pair, shielded #18 with IS/OA, 600 V, PVC jacket	98.10
Pull Rope	Soft-Fiber Polyester	0.00

5 **ADDED PER ADDENDUM No. 5 DATED JULY 30, 2009**

CONDUIT AND TRAY SCHEDULE
YBI TRANSITION STRUCTURES ROADWAY EB

E-328B

REVISED BY | DATE REVISED
JEFFRI HALIM | ELLERY LUCAS
CALCULATED-DESIGNED BY | CHECKED BY
CONSULTANT FUNCTIONAL SUPERVISOR
BEHZAD GOLEMOHAMMADI
STATE OF CALIFORNIA - DEPARTMENT OF TRANSPORTATION
Caltrans

LAST REVISION 00-00-00 | DATE PLOTTED => 28-JUL-2009 | TIME PLOTTED => 06:48

Dist	COUNTY	ROUTE	KILOMETER POST TOTAL PROJECT	SHEET No.	TOTAL SHEETS
04	SF	80	12.7/13.2	447C	806

Caltrans Metric

5

4/10/09
REGISTERED ELECTRICAL ENGINEER

PLANS APPROVAL DATE

REGISTERED PROFESSIONAL ENGINEER
FADI WALIEDDINE
No. 11465
Exp. 12/31/09
ELECTRICAL
STATE OF CALIFORNIA

THE STATE OF CALIFORNIA OR ITS OFFICERS OR AGENTS SHALL NOT BE RESPONSIBLE FOR THE ACCURACY OR COMPLETENESS OF ELECTRONIC COPIES OF THIS PLAN SHEET.

PB AMERICAS, Inc.
A Parsons Brinckerhoff Company
303 Second St., Suite 700N
San Francisco, CA 94107-1317

Conduit/Tray No:	7202
Reference:	E-90
Size:	41
Type:	RGS conduit
From:	PB-COM
To:	End of conduit 7202
Total Fill (mm2):	0.00
Allowable Fill (mm2):	534.55
Remarks:	Stub out conduit West of Bent #48 & cap.
Description of Changes:	

Included Cable No.	Conductor Type	Area (mm2)
		0.00

Conduit/Tray No:	Wireway #3E
Reference:	E-107, E-108
Size:	203.2
Type:	203 mm x 203 mm Wireway, Nema 4X
From:	Platform #3E
To:	Platform #3E
Total Fill (mm2):	5678.89
Allowable Fill (mm2):	8258.05
Remarks:	
Description of Changes:	

Included Cable No.	Conductor Type	Area (mm2)
2093	1-3/C + Gnd, #4, 600 V, EPR insulation	366.10
2093-2	1-4/C + Gnd, #4, 600 V, EPR insulation	476.76
2094	1-3/C + Gnd, #2, 600 V, EPR insulation	527.18
2094-1	1-3/C + Gnd, #2, 600 V, EPR insulation	527.18
2094-1	1-3/C + Gnd, #2, 600 V, EPR insulation	527.18
2094-2	1-3/C + Gnd, #1/0, 600 V, EPR insulation	754.18
2102	1-3/C + Gnd, #4, 600 V, EPR insulation	366.10
2102-2	1-4/C + Gnd, #4, 600 V, EPR insulation	476.76
2254-1	1-3/C #16, 600 V, EPR insulation	62.07
2254-2	1-3/C #16, 600 V, EPR insulation	62.07
2254-4	1-3/C #16, 600 V, EPR insulation	62.07
2910-1	1-3/C #16, 600 V, EPR insulation	62.07
LP218-1,3,5	1-4/C + Gnd, #8, 600 V, EPR insulation	266.48
LP218-2,4,6	1-4/C + Gnd, #8, 600 V, EPR insulation	266.48
UP203-1	2 + 1 Gnd, #10, #10, 600 V, RHH/RHW insulation	60.80
UP203-11	1-2/C + Gnd, #12, 600 V, EPR insulation	102.61
UP203-2	2 + 1 Gnd, #12, #12, 600 V, RHH/RHW insulation	49.21
UP203-5	2 + 1 Gnd, #12, #12, 600 V, RHH/RHW insulation	49.21
UP203-9	1-2/C + Gnd, #12, 600 V, EPR insulation	102.61
UP209-1, 3	3 + 1 Gnd, #2, #6, 600 V, RHH/RHW insulation	410.43
UP209-2	2-1/C #10, 600 V, RHH/RHW insulation	40.54
UP209-6	2 + 1 Gnd, #10, #10, 600 V, RHH/RHW insulation	60.80

5 ADDED PER ADDENDUM No. 5 DATED JULY 30, 2009

CONDUIT AND TRAY SCHEDULE
YBI TRANSITION STRUCTURES ROADWAY EB

E-328C

REVISED BY | DATE REVISED
JEFFRI HALIM | ELLERY LUCAS
CALCULATED-DESIGNED BY | CHECKED BY
CONSULTANT FUNCTIONAL SUPERVISOR
BEHZAD GOLEMOHAMMADI
STATE OF CALIFORNIA - DEPARTMENT OF TRANSPORTATION
Caltrans

LAST REVISION 00-00-00 | DATE PLOTTED => 28-JUL-2009 | TIME PLOTTED => 06:48

Dist	COUNTY	ROUTE	KILOMETER POST TOTAL PROJECT	SHEET No.	TOTAL SHEETS
04	SF	80	12.7/13.2	448	806

Caltrans Metric

2/14/08
REGISTERED ELECTRICAL ENGINEER

6-23-08
PLANS APPROVAL DATE

REGISTERED PROFESSIONAL ENGINEER FADI WALIEDDINE No. 11465 Exp. 12/31/09 ELECTRICAL STATE OF CALIFORNIA

THE STATE OF CALIFORNIA OR ITS OFFICERS OR AGENTS SHALL NOT BE RESPONSIBLE FOR THE ACCURACY OR COMPLETENESS OF ELECTRONIC COPIES OF THIS PLAN SHEET.

PB AMERICAS, Inc.
A Parsons Brinckerhoff Company
303 Second St., Suite 700N
San Francisco, CA 94107-1317

Conduit/Tray No:	5576
Reference:	E-133
Size:	41
Type:	RGS conduit
From:	PB-LTG
To:	PB-2K
Total Fill (mm2):	0.00
Remarks:	
Allowable Fill (mm2):	534.55
Description of Changes:	

Included Cable No.	Conductor Type	Area (mm2)
Pull Rope	Soft-Fiber Polyester	0.00

Conduit/Tray No:	5590
Reference:	E-132
Size:	41
Type:	RGS conduit
From:	TOS/COM Vault #3E
To:	PB-COM
Total Fill (mm2):	0.00
Remarks:	
Allowable Fill (mm2):	534.55
Description of Changes:	

Included Cable No.	Conductor Type	Area (mm2)
Pull Rope	Soft-Fiber Polyester	0.00

Conduit/Tray No:	5591
Reference:	E-120, E-132, E-133
Size:	103
Type:	RGS conduit
From:	PB-COM
To:	PB-COM
Total Fill (mm2):	0.00
Remarks:	
Allowable Fill (mm2):	3324.51
Description of Changes:	

Included Cable No.	Conductor Type	Area (mm2)
Pull Rope	Soft-Fiber Polyester	0.00

Conduit/Tray No:	5592
Reference:	E-120, E-132, E-135
Size:	103
Type:	RGS conduit
From:	PB-COM
To:	PB-COM
Total Fill (mm2):	0.00
Remarks:	
Allowable Fill (mm2):	3324.51
Description of Changes:	

Included Cable No.	Conductor Type	Area (mm2)
Pull Rope	Soft-Fiber Polyester	0.00

Conduit/Tray No:	5888
Reference:	E-132
Size:	41
Type:	RGS conduit
From:	PB-LTG
To:	PB-LTG (Bike Path)
Total Fill (mm2):	324.29
Remarks:	
Allowable Fill (mm2):	708.29
Description of Changes:	

Included Cable No.	Conductor Type	Area (mm2)
S-2042-1	1-3/C + Gnd, #6, 600 V, EPR insulation	324.29
Pull Rope	Soft-Fiber Polyester	0.00

Conduit/Tray No:	5889
Reference:	E-132
Size:	27
Type:	RGS conduit
From:	PB-LTG
To:	Electrical Vault #3E
Total Fill (mm2):	266.48
Remarks:	
Allowable Fill (mm2):	303.46
Description of Changes:	

Included Cable No.	Conductor Type	Area (mm2)
LP218-2,4,6	1-4/C + Gnd, #8, 600 V, EPR insulation	266.48
Pull Rope	Soft-Fiber Polyester	0.00

Conduit/Tray No:	5900
Reference:	E-130
Size:	41
Type:	RGS conduit
From:	Electrical Vault #1E
To:	PB-LTG
Total Fill (mm2):	0.00
Remarks:	
Allowable Fill (mm2):	534.55
Description of Changes:	

Included Cable No.	Conductor Type	Area (mm2)
Pull Rope	Soft-Fiber Polyester	0.00

Conduit/Tray No:	5901
Reference:	E-118, E-130, E-133
Size:	103
Type:	RGS conduit
From:	Electrical Vault #1E
To:	PB-2A
Total Fill (mm2):	3067.52
Remarks:	
Allowable Fill (mm2):	3324.51
Description of Changes:	

Included Cable No.	Conductor Type	Area (mm2)
2092	1-3/C + Gnd, #4, 600 V, EPR insulation	366.10
2093	1-3/C + Gnd, #4, 600 V, EPR insulation	366.10
2094	1-3/C + Gnd, #2, 600 V, EPR insulation	527.18
2101	1-3/C + Gnd, #4, 600 V, EPR insulation	366.10
2102	1-3/C + Gnd, #4, 600 V, EPR insulation	366.10
2254-1	1-3/C #16, 600 V, EPR insulation	62.07
A-2005-1	1-3/C + Gnd, #8, 600 V, EPR insulation	262.68
A-2008-1	1-3/C + Gnd, #4, 600 V, EPR insulation	366.10
A-2009-1	1-3/C + Gnd, #6, 600 V, EPR insulation	324.29
Pull Rope	Soft-Fiber Polyester	0.00
UP202-8	2 + 1 Gnd, #10, #10, 600 V, RHH/RHW insulation	60.80

5

CONDUIT AND TRAY SCHEDULE
YBI TRANSITION STRUCTURES GIRDER EB

5 REVISED PER ADDENDUM No. 5 DATED JULY 30, 2009

E-329

STATE OF CALIFORNIA - DEPARTMENT OF TRANSPORTATION
Caltrans

CONSULTANT FUNCTIONAL SUPERVISOR: BEHZAD GOLEMOHAMMADI
CALCULATED-DESIGNED BY: CARMELO RIVERA
CHECKED BY: ELLERY LUCAS
REVISED BY / DATE REVISED

LAST REVISION 00-00-00
DATE PLOTTED => 28-JUL-2009
TIME PLOTTED => 06:48

Dist	COUNTY	ROUTE	KILOMETER POST TOTAL PROJECT	SHEET No.	TOTAL SHEETS
04	SF	80	12.7/13.2	449	806

REGISTERED ELECTRICAL ENGINEER 2/14/08

6-23-08
PLANS APPROVAL DATE

REGISTERED PROFESSIONAL ENGINEER FADI WALIEDDINE No. 11465 Exp. 12/31/09 ELECTRICAL STATE OF CALIFORNIA

THE STATE OF CALIFORNIA OR ITS OFFICERS OR AGENTS SHALL NOT BE RESPONSIBLE FOR THE ACCURACY OR COMPLETENESS OF ELECTRONIC COPIES OF THIS PLAN SHEET.

PB AMERICAS, Inc.
A Parsons Brinckerhoff Company
303 Second St., Suite 700N
San Francisco, CA 94107-1317

5

Conduit/Tray No:	5901A	Reference:	E-119, E-131, E-133
Size:	103	Type:	RGS conduit
From:	PB-2A	To:	Electrical Vault #2E
Total Fill (mm2):	3067.52	Remarks:	
Allowable Fill (mm2):	3324.51		
Description of Changes:			

Included Cable No.	Conductor Type	Area (mm2)
2092	1-3/C + Gnd, #4, 600 V, EPR insulation	366.10
2093	1-3/C + Gnd, #4, 600 V, EPR insulation	366.10
2094	1-3/C + Gnd, #2, 600 V, EPR insulation	527.18
2101	1-3/C + Gnd, #4, 600 V, EPR insulation	366.10
2102	1-3/C + Gnd, #4, 600 V, EPR insulation	366.10
2254-1	1-3/C #16, 600 V, EPR insulation	62.07
A-2005-1	1-3/C + Gnd, #8, 600 V, EPR insulation	262.68
A-2008-1	1-3/C + Gnd, #4, 600 V, EPR insulation	366.10
A-2009-1	1-3/C + Gnd, #6, 600 V, EPR insulation	324.29
Pull Rope	Soft-Fiber Polyester	0.00
UP202-8	2 + 1 Gnd, #10, #10, 600 V, RHH/RHW insulation	60.80

Conduit/Tray No:	5902	Reference:	E-118, E-130, E-133
Size:	103	Type:	RGS conduit
From:	Electrical Vault #1E	To:	PB-2A
Total Fill (mm2):	1621.91	Remarks:	
Allowable Fill (mm2):	3324.51		
Description of Changes:			

Included Cable No.	Conductor Type	Area (mm2)
2910-1	1-3/C #16, 600 V, EPR insulation	62.07
A-2007-1	1-3/C + Gnd, #6, 600 V, EPR insulation	324.29
Pull Rope	Soft-Fiber Polyester	0.00
S-2023-1	1-3/C + Gnd, #6, 600 V, EPR insulation	324.29
S-2024-1	1-3/C + Gnd, #6, 600 V, EPR insulation	324.29
S-2041-2	1-3/C + Gnd, #8, 600 V, EPR insulation	262.68
S-2042-1	1-3/C + Gnd, #6, 600 V, EPR insulation	324.29

Conduit/Tray No:	5902A	Reference:	E-119, E-131, E-133
Size:	103	Type:	RGS conduit
From:	PB-2A	To:	Electrical Vault #2E
Total Fill (mm2):	1621.91	Remarks:	
Allowable Fill (mm2):	3324.51		
Description of Changes:			

Included Cable No.	Conductor Type	Area (mm2)
2910-1	1-3/C #16, 600 V, EPR insulation	62.07
A-2007-1	1-3/C + Gnd, #6, 600 V, EPR insulation	324.29
Pull Rope	Soft-Fiber Polyester	0.00
S-2023-1	1-3/C + Gnd, #6, 600 V, EPR insulation	324.29
S-2024-1	1-3/C + Gnd, #6, 600 V, EPR insulation	324.29
S-2041-2	1-3/C + Gnd, #8, 600 V, EPR insulation	262.68
S-2042-1	1-3/C + Gnd, #6, 600 V, EPR insulation	324.29

Conduit/Tray No:	5903A	Reference:	E-119, E-131, E-133
Size:	103	Type:	RGS conduit
From:	PB-2A	To:	Electrical Vault #2E
Total Fill (mm2):	0.00	Remarks:	
Allowable Fill (mm2):	3324.51		
Description of Changes:			

Included Cable No.	Conductor Type	Area (mm2)
Pull Rope	Soft-Fiber Polyester	0.00

Conduit/Tray No:	5906	Reference:	E-105, E-130
Size:	78	Type:	RGS-PVC coated conduit
From:	TOS/COM Vault #1E	To:	Controller Cabinet TOS-01EW
Total Fill (mm2):	647.30	Remarks:	
Allowable Fill (mm2):	1499.81		
Description of Changes:			

Included Cable No.	Conductor Type	Area (mm2)
2475-1	72 Fiber, single mode fiber optic riser cable	323.65
2475-2	72 Fiber, single mode fiber optic riser cable	323.65
Pull Rope	Soft-Fiber Polyester	0.00

Conduit/Tray No:	5908	Reference:	E-28, E-33, E-127, E-130
Size:	103	Type:	RGS conduit
From:	Electrical Vault #1E	To:	Manhole-29
Total Fill (mm2):	2372.64	Remarks:	
Allowable Fill (mm2):	3324.51		
Description of Changes:			

Included Cable No.	Conductor Type	Area (mm2)
A-2007-1	1-3/C + Gnd, #6, 600 V, EPR insulation	324.29
A-2008-1	1-3/C + Gnd, #4, 600 V, EPR insulation	366.10
A-2009-1	1-3/C + Gnd, #6, 600 V, EPR insulation	324.29
Pull Rope	Soft-Fiber Polyester	0.00
S-2023-1	1-3/C + Gnd, #6, 600 V, EPR insulation	324.29
S-2024-1	1-3/C + Gnd, #6, 600 V, EPR insulation	324.29
S-2041-1	1-3/C + Gnd, #6, 600 V, EPR insulation	324.29
S-2042-1	1-3/C + Gnd, #6, 600 V, EPR insulation	324.29
UP202-8	2 + 1 Gnd, #10, #10, 600 V, RHH/RHW insulation	60.80

5

CONDUIT AND TRAY SCHEDULE
YBI TRANSITION STRUCTURES GIRDER EB

5 REVISED PER ADDENDUM No. 5 DATED JULY 30, 2009

E-330

REVISED BY | DATE REVISED
CARMELO RIVERA | ELLERY LUCAS
CALCULATED-DESIGNED BY | CHECKED BY
CONSULTANT FUNCTIONAL SUPERVISOR
BEHZAD GOLEMOHAMMADI
STATE OF CALIFORNIA - DEPARTMENT OF TRANSPORTATION
Caltrans

LAST REVISION 00-00-00 | DATE PLOTTED => 28-JUL-2009 | TIME PLOTTED => 06:48

Dist	COUNTY	ROUTE	KILOMETER POST TOTAL PROJECT	SHEET No.	TOTAL SHEETS
04	SF	80	12.7/13.2	451	806

Caltrans Metric

2/14/08
REGISTERED ELECTRICAL ENGINEER

6-23-08
PLANS APPROVAL DATE

REGISTERED PROFESSIONAL ENGINEER
FADI WALIEDDINE
No. 11465
Exp. 12/31/09
ELECTRICAL
STATE OF CALIFORNIA

THE STATE OF CALIFORNIA OR ITS OFFICERS OR AGENTS SHALL NOT BE RESPONSIBLE FOR THE ACCURACY OR COMPLETENESS OF ELECTRONIC COPIES OF THIS PLAN SHEET.

PB AMERICAS, Inc.
A Parsons Brinckerhoff Company
303 Second St., Suite 700N
San Francisco, CA 94107-1317

Conduit/Tray No:	5916
Reference:	E-118
Size:	41
Type:	RGS conduit
From:	PB-LTG
To:	PB-LTG
Total Fill (mm2):	0.00
Allowable Fill (mm2):	534.55
Remarks:	
Description of Changes:	

Included Cable No.	Conductor Type	Area (mm2)
Pull Rope	Soft-Fiber Polyester	0.00

Conduit/Tray No:	5917
Reference:	E-118
Size:	41
Type:	RGS conduit
From:	PB-COM
To:	PB-COM
Total Fill (mm2):	0.00
Allowable Fill (mm2):	534.55
Remarks:	
Description of Changes:	

Included Cable No.	Conductor Type	Area (mm2)
Pull Rope	Soft-Fiber Polyester	0.00

Conduit/Tray No:	5922
Reference:	E-118, E-130, E-133
Size:	103
Type:	RGS conduit
From:	TOS/COM Vault #1E
To:	PB-2E
Total Fill (mm2):	2501.52
Allowable Fill (mm2):	3324.51
Remarks:	
Description of Changes:	

Included Cable No.	Conductor Type	Area (mm2)
2143	1 - 2 pair, shielded #18 with IS/OA, 600 V, PVC jacket	98.10
2473-2	50 pair #18, shielded pairs, IS/OS shield 600 V, XLPE insul., PVC jacket	1201.71
2474-2	50 pair #18, shielded pairs, IS/OS shield 600 V, XLPE insul., PVC jacket	1201.71
Pull Rope	Soft-Fiber Polyester	0.00

Conduit/Tray No:	5922A
Reference:	E-106, E-119, E-131, E-133
Size:	103
Type:	RGS conduit
From:	PB-2E
To:	TOS/COM Vault #2E
Total Fill (mm2):	2501.52
Allowable Fill (mm2):	3324.51
Remarks:	
Description of Changes:	

Included Cable No.	Conductor Type	Area (mm2)
2143	1 - 2 pair, shielded #18 with IS/OA, 600 V, PVC jacket	98.10
2473-2	50 pair #18, shielded pairs, IS/OS shield 600 V, XLPE insul., PVC jacket	1201.71
2474-2	50 pair #18, shielded pairs, IS/OS shield 600 V, XLPE insul., PVC jacket	1201.71
Pull Rope	Soft-Fiber Polyester	0.00

Conduit/Tray No:	5923
Reference:	E-118, E-130, E-133
Size:	103
Type:	RGS conduit
From:	TOS/COM Vault #1E
To:	PB-2E
Total Fill (mm2):	647.30
Allowable Fill (mm2):	2576.49
Remarks:	
Description of Changes:	

Included Cable No.	Conductor Type	Area (mm2)
2475-2	72 Fiber, single mode fiber optic riser cable	323.65
2475-4	72 Fiber, single mode fiber optic riser cable	323.65
Pull Rope	Soft-Fiber Polyester	0.00

Conduit/Tray No:	5923A
Reference:	E-106, E-119, E-131, E-133
Size:	103
Type:	RGS conduit
From:	PB-2E
To:	TOS/COM Vault #2E
Total Fill (mm2):	647.30
Allowable Fill (mm2):	2576.49
Remarks:	
Description of Changes:	

Included Cable No.	Conductor Type	Area (mm2)
2475-2	72 Fiber, single mode fiber optic riser cable	323.65
2475-4	72 Fiber, single mode fiber optic riser cable	323.65
Pull Rope	Soft-Fiber Polyester	0.00

Conduit/Tray No:	5924
Reference:	E-118, E-130, E-133
Size:	103
Type:	RGS conduit
From:	TOS/COM Vault #1E
To:	PB-2E
Total Fill (mm2):	0.00
Allowable Fill (mm2):	3324.51
Remarks:	
Description of Changes:	

Included Cable No.	Conductor Type	Area (mm2)
Pull Rope	Soft-Fiber Polyester	0.00

Conduit/Tray No:	5924A
Reference:	E-106, E-119, E-131, E-133
Size:	103
Type:	RGS conduit
From:	PB-2E
To:	TOS/COM Vault #2E
Total Fill (mm2):	0.00
Allowable Fill (mm2):	3324.51
Remarks:	
Description of Changes:	

Included Cable No.	Conductor Type	Area (mm2)
Pull Rope	Soft-Fiber Polyester	0.00

5 **REVISED PER ADDENDUM No. 5 DATED JULY 30, 2009**

CONDUIT AND TRAY SCHEDULE
YBI TRANSITION STRUCTURES GIRDER EB

E-332

STATE OF CALIFORNIA - DEPARTMENT OF TRANSPORTATION
Caltrans

CONSULTANT FUNCTIONAL SUPERVISOR: BEHZAD GOLEMOHAMMADI
CALCULATED-DESIGNED BY: CARMELO RIVERA
CHECKED BY: ELLERY LUCAS
REVISED BY / DATE REVISED

LAST REVISION 00-00-00
DATE PLOTTED => 28-JUL-2009
TIME PLOTTED => 06:49

Dist	COUNTY	ROUTE	KILOMETER POST TOTAL PROJECT	SHEET No.	TOTAL SHEETS
04	SF	80	12.7/13.2	452	806

Caltrans Metric

2/14/08
REGISTERED ELECTRICAL ENGINEER

6-23-08
PLANS APPROVAL DATE

REGISTERED PROFESSIONAL ENGINEER FADI WALIEDDINE No. 11465 Exp. 12/31/09 ELECTRICAL STATE OF CALIFORNIA

THE STATE OF CALIFORNIA OR ITS OFFICERS OR AGENTS SHALL NOT BE RESPONSIBLE FOR THE ACCURACY OR COMPLETENESS OF ELECTRONIC COPIES OF THIS PLAN SHEET.

PB AMERICAS, Inc.
A Parsons Brinckerhoff Company
303 Second St., Suite 700N
San Francisco, CA 94107-1317

Conduit/Tray No:	5925
Reference:	E-127, E-130
Size:	41
Type:	RGS conduit
From:	TOS/COM Vault #1E
To:	PB-COM (TOS/COM)
Total Fill (mm2):	196.20
Remarks:	
Allowable Fill (mm2):	534.55
Description of Changes:	

Included Cable No.	Conductor Type	Area (mm2)
2143	1 - 2 pair, shielded #18 with IS/OA, 600 V, PVC jacket	98.10
2170	1 - 2 pair, shielded #18 with IS/OA, 600 V, PVC jacket	98.10
Pull Rope	Soft-Fiber Polyester	0.00

Conduit/Tray No:	5926
Reference:	E-120
Size:	41
Type:	RGS conduit
From:	PB-4D
To:	PB-COM
Total Fill (mm2):	0.00
Remarks:	
Allowable Fill (mm2):	534.55
Description of Changes:	

Included Cable No.	Conductor Type	Area (mm2)
Pull Rope	Soft-Fiber Polyester	0.00

Conduit/Tray No:	5928
Reference:	E-133
Size:	41
Type:	RGS conduit
From:	PB-LTG
To:	PB-LTG (Bike Path)
Total Fill (mm2):	0.00
Remarks:	
Allowable Fill (mm2):	534.55
Description of Changes:	

Included Cable No.	Conductor Type	Area (mm2)
Pull Rope	Soft-Fiber Polyester	0.00

Conduit/Tray No:	5929
Reference:	E-131
Size:	41
Type:	RGS conduit
From:	Electrical Vault #2E
To:	PB-LTG (Bike Path)
Total Fill (mm2):	328.29
Remarks:	
Allowable Fill (mm2):	534.55
Description of Changes:	

Included Cable No.	Conductor Type	Area (mm2)
Pull Rope	Soft-Fiber Polyester	0.00
S-2041-2	1-3/C + Gnd, #8, 600 V, EPR insulation	262.68
UP202-12	3 + 1 Gnd, #12, #12, 600 V, RHH/RHW insulation	65.61

5

Conduit/Tray No:	5935
Reference:	E-131, E-106
Size:	78
Type:	RGS-PVC coated conduit
From:	PB-2B(TOS/COM)
To:	TOS/COM Vault #2E
Total Fill (mm2):	0.00
Remarks:	
Allowable Fill (mm2):	1935.24
Description of Changes:	

Included Cable No.	Conductor Type	Area (mm2)
Pull Rope	Soft-Fiber Polyester	0.00

5

Conduit/Tray No:	5936
Reference:	E-131, E-106
Size:	78
Type:	RGS-PVC coated conduit
From:	PB-2B (TOS/COM)
To:	TOS/COM Vault #2E
Total Fill (mm2):	963.54
Remarks:	
Allowable Fill (mm2):	1935.24
Description of Changes:	

Included Cable No.	Conductor Type	Area (mm2)
2475-2	72 Fiber, single mode fiber optic riser cable	323.65
2475-3	72 Fiber, single mode fiber optic riser cable	323.65
PLE02A	10 DLC	316.24
Pull Rope	Soft-Fiber Polyester	0.00

Conduit/Tray No:	5938
Reference:	E-119
Size:	78
Type:	RGS conduit
From:	TOS/COM Vault #2E
To:	PL-E02 (PB-4D)
Total Fill (mm2):	316.24
Remarks:	
Allowable Fill (mm2):	2564.19
Description of Changes:	

Included Cable No.	Conductor Type	Area (mm2)
PLE02A	10 DLC	316.24
Pull Rope	Soft-Fiber Polyester	0.00

Conduit/Tray No:	5939
Reference:	E-131
Size:	41
Type:	RGS conduit
From:	TOS/COM Vault #2E
To:	PB-COM (Bike Path)
Total Fill (mm2):	0.00
Remarks:	
Allowable Fill (mm2):	534.55
Description of Changes:	

Included Cable No.	Conductor Type	Area (mm2)
Pull Rope	Soft-Fiber Polyester	0.00

5 **REVISED PER ADDENDUM No. 5 DATED JULY 30, 2009**

CONDUIT AND TRAY SCHEDULE
YBI TRANSITION STRUCTURES GIRDER EB

E-333

REVISED BY | DATE REVISED
CARMELO RIVERA | ELLERY LUCAS
CALCULATED-DESIGNED BY | CHECKED BY
CONSULTANT FUNCTIONAL SUPERVISOR
BEHZAD GOLEMOHAMMADI
STATE OF CALIFORNIA - DEPARTMENT OF TRANSPORTATION
Caltrans

LAST REVISION 00-00-00 | DATE PLOTTED => 28-JUL-2009 | TIME PLOTTED => 06:49

Dist	COUNTY	ROUTE	KILOMETER POST TOTAL PROJECT	SHEET No.	TOTAL SHEETS
04	SF	80	12.7/13.2	453	806

REGISTERED ELECTRICAL ENGINEER 2/14/08

6-23-08
PLANS APPROVAL DATE

REGISTERED PROFESSIONAL ENGINEER FADI WALIEDDINE No. 11465 Exp. 12/31/09 ELECTRICAL STATE OF CALIFORNIA

THE STATE OF CALIFORNIA OR ITS OFFICERS OR AGENTS SHALL NOT BE RESPONSIBLE FOR THE ACCURACY OR COMPLETENESS OF ELECTRONIC COPIES OF THIS PLAN SHEET.

PB AMERICAS, Inc.
A Parsons Brinckerhoff Company
303 Second St., Suite 700N
San Francisco, CA 94107-1317

5

Conduit/Tray No:	5940
Reference:	E-131
Size:	41
Type:	RGS conduit
From:	PB LTG (Bike Path)
To:	Electrical Vault #2E
Total Fill (mm2):	648.58
Remarks:	
Allowable Fill (mm2):	708.28
Description of Changes:	

Included Cable No.	Conductor Type	Area (mm2)
A-2007-1	1-3/C + Gnd, #6, 600 V, EPR insulation	324.29
A-2009-1	1-3/C + Gnd, #6, 600 V, EPR insulation	324.29
Pull Rope	Soft-Fiber Polyester	0.00

Conduit/Tray No:	5941
Reference:	E-119, E-131
Size:	103
Type:	RGS conduit
From:	Electrical Vault #2E
To:	Electrical Vault #3E
Total Fill (mm2):	1949.77
Remarks:	
Allowable Fill (mm2):	3324.51
Description of Changes:	

Included Cable No.	Conductor Type	Area (mm2)
2093	1-3/C + Gnd, #4, 600 V, EPR insulation	366.10
2094	1-3/C + Gnd, #2, 600 V, EPR insulation	527.18
2102	1-3/C + Gnd, #4, 600 V, EPR insulation	366.10
A-2008-1	1-3/C + Gnd, #4, 600 V, EPR insulation	366.10
Pull Rope	Soft-Fiber Polyester	0.00
S-2024-1	1-3/C + Gnd, #6, 600 V, EPR insulation	324.29

Conduit/Tray No:	5942
Reference:	E-119, E-131
Size:	103
Type:	RGS conduit
From:	Electrical Vault #2E
To:	Electrical Vault #3E
Total Fill (mm2):	186.21
Remarks:	
Allowable Fill (mm2):	3324.51
Description of Changes:	

Included Cable No.	Conductor Type	Area (mm2)
2254-1	1-3/C #16, 600 V, EPR insulation	62.07
2254-2	1-3/C #16, 600 V, EPR insulation	62.07
2910-1	1-3/C #16, 600 V, EPR insulation	62.07
Pull Rope	Soft-Fiber Polyester	0.00

Conduit/Tray No:	5943
Reference:	E-119, E-131
Size:	103
Type:	RGS conduit
From:	Electrical Vault #2E
To:	Electrical Vault #3E
Total Fill (mm2):	0.00
Remarks:	
Allowable Fill (mm2):	3324.51
Description of Changes:	

Included Cable No.	Conductor Type	Area (mm2)
Pull Rope	Soft-Fiber Polyester	0.00

Conduit/Tray No:	5944
Reference:	E-119, E-131, E-132, E-107
Size:	103
Type:	RGS conduit
From:	TOS/COM Vault #2E
To:	TOS/COM Vault #3E
Total Fill (mm2):	2795.82
Remarks:	
Allowable Fill (mm2):	3324.51
Description of Changes:	

Included Cable No.	Conductor Type	Area (mm2)
2142	1 - 2 pair, shielded #18 with IS/OA, 600 V, PVC jacket	98.10
2143	1 - 2 pair, shielded #18 with IS/OA, 600 V, PVC jacket	98.10
2170	1 - 2 pair, shielded #18 with IS/OA, 600 V, PVC jacket	98.10
2170	1 - 2 pair, shielded #18 with IS/OA, 600 V, PVC jacket	98.10
2473-3	50 pair #18, shielded pairs, IS/OS shield 600 V, XLPE insul., PVC jacket	1201.71
2474-3	50 pair #18, shielded pairs, IS/OS shield 600 V, XLPE insul., PVC jacket	1201.71
Pull Rope	Soft-Fiber Polyester	0.00

Conduit/Tray No:	5945
Reference:	E-119, E-131, E-132, E-107
Size:	103
Type:	RGS conduit
From:	TOS/COM Vault #2E
To:	TOS/COM Vault #3E
Total Fill (mm2):	647.30
Remarks:	
Allowable Fill (mm2):	2576.49
Description of Changes:	

Included Cable No.	Conductor Type	Area (mm2)
2475-3	72 Fiber, single mode fiber optic riser cable	323.65
2475-4	72 Fiber, single mode fiber optic riser cable	323.65
Pull Rope	Soft-Fiber Polyester	0.00

Conduit/Tray No:	5946
Reference:	E-119, E-131, E-132, E-107
Size:	103
Type:	RGS conduit
From:	TOS/COM Vault #2E
To:	TOS/COM Vault #3E
Total Fill (mm2):	0.00
Remarks:	
Allowable Fill (mm2):	3324.51
Description of Changes:	

Included Cable No.	Conductor Type	Area (mm2)
Pull Rope	Soft-Fiber Polyester	0.00

5 REVISED PER ADDENDUM No. 5 DATED JULY 30, 2009

CONDUIT AND TRAY SCHEDULE
YBI TRANSITION STRUCTURES GIRDER EB

E-334

REVISED BY | DATE REVISED
CARMELO RIVERA | ELLERY LUCAS
CALCULATED-DESIGNED BY | CHECKED BY
CONSULTANT FUNCTIONAL SUPERVISOR
BEHZAD GOLEMOHAMMADI
STATE OF CALIFORNIA - DEPARTMENT OF TRANSPORTATION
Caltrans

LAST REVISION 00-00-00 | DATE PLOTTED => 28-JUL-2009 | TIME PLOTTED => 06:49

Dist	COUNTY	ROUTE	KILOMETER POST TOTAL PROJECT	SHEET No.	TOTAL SHEETS
04	SF	80	12.7/13.2	457A	806

Caltrans Metric

5

4/10/09
REGISTERED ELECTRICAL ENGINEER

6-23-08
PLANS APPROVAL DATE

REGISTERED PROFESSIONAL ENGINEER FADI WALIEDDINE No. 11465 Exp. 12/31/09 ELECTRICAL STATE OF CALIFORNIA

THE STATE OF CALIFORNIA OR ITS OFFICERS OR AGENTS SHALL NOT BE RESPONSIBLE FOR THE ACCURACY OR COMPLETENESS OF ELECTRONIC COPIES OF THIS PLAN SHEET.

PB AMERICAS, Inc.
A Parsons Brinckerhoff Company
303 Second St., Suite 700N
San Francisco, CA 94107-1317

Conduit/Tray No:	5900	Reference:	E-130
Size:	41	Type:	RGS conduit
From:	Electrical Vault #1E	To:	PB-LTG
Total Fill (mm2):	49.21	Remarks:	
Allowable Fill (mm2):	534.55		

Description of Changes:

Included Cable No.	Conductor Type	Area (mm2)
Pull Rope	Soft-Fiber Polyester	0.00
UP201-12	2 + 1 Gnd, #12, #12, 600 V, RHH/RHW insulation	49.21

Conduit/Tray No:	5901	Reference:	E-118, E-130, E-133
Size:	103	Type:	RGS conduit
From:	Electrical Vault #1E	To:	PB-2A
Total Fill (mm2):	3268.59	Remarks:	
Allowable Fill (mm2):	3324.51		

Description of Changes:

Included Cable No.	Conductor Type	Area (mm2)
2092	1-3/C + Gnd, #4, 600 V, EPR insulation	366.10
2093	1-3/C + Gnd, #4, 600 V, EPR insulation	366.10
2094	1-3/C + Gnd, #2, 600 V, EPR insulation	527.18
2101	1-3/C + Gnd, #4, 600 V, EPR insulation	366.10
2102	1-3/C + Gnd, #4, 600 V, EPR insulation	366.10
2254-1	1-3/C #16, 600 V, EPR insulation	62.07
A-2005-1	1-3/C + Gnd, #8, 600 V, EPR insulation	262.68
A-2008-1	1-3/C + Gnd, #4, 600 V, EPR insulation	366.10
A-2009-1	1-3/C + Gnd, #8, 600 V, EPR insulation	262.68
A-2010-1	1-3/C + Gnd, #8, 600 V, EPR insulation	262.68
Pull Rope	Soft-Fiber Polyester	0.00
UP202-8	2 + 1 Gnd, #10, #10, 600 V, RHH/RHW insulation	60.80

Conduit/Tray No:	5901A	Reference:	E-119, E-131, E-133
Size:	103	Type:	RGS conduit
From:	PB-2A	To:	Electrical Vault #2E
Total Fill (mm2):	3268.59	Remarks:	
Allowable Fill (mm2):	3324.51		

Description of Changes:

Included Cable No.	Conductor Type	Area (mm2)
2092	1-3/C + Gnd, #4, 600 V, EPR insulation	366.10
2093	1-3/C + Gnd, #4, 600 V, EPR insulation	366.10
2094	1-3/C + Gnd, #2, 600 V, EPR insulation	527.18
2101	1-3/C + Gnd, #4, 600 V, EPR insulation	366.10
2102	1-3/C + Gnd, #4, 600 V, EPR insulation	366.10
2254-1	1-3/C #16, 600 V, EPR insulation	62.07
A-2005-1	1-3/C + Gnd, #8, 600 V, EPR insulation	262.68
A-2008-1	1-3/C + Gnd, #4, 600 V, EPR insulation	366.10
A-2009-1	1-3/C + Gnd, #8, 600 V, EPR insulation	262.68
A-2010-1	1-3/C + Gnd, #8, 600 V, EPR insulation	262.68
Pull Rope	Soft-Fiber Polyester	0.00
UP202-8	2 + 1 Gnd, #10, #10, 600 V, RHH/RHW insulation	60.80

Conduit/Tray No:	5908	Reference:	E-28, E-33, E-127, E-130
Size:	103	Type:	RGS conduit
From:	Electrical Vault #1E	To:	Manhole-29
Total Fill (mm2):	2573.71	Remarks:	
Allowable Fill (mm2):	3324.51		

Description of Changes:

Included Cable No.	Conductor Type	Area (mm2)
A-2007-1	1-3/C + Gnd, #6, 600 V, EPR insulation	324.29
A-2008-1	1-3/C + Gnd, #4, 600 V, EPR insulation	366.10
A-2009-1	1-3/C + Gnd, #8, 600 V, EPR insulation	262.68
A-2010-1	1-3/C + Gnd, #8, 600 V, EPR insulation	262.68
Pull Rope	Soft-Fiber Polyester	0.00
S-2023-1	1-3/C + Gnd, #6, 600 V, EPR insulation	324.29
S-2024-1	1-3/C + Gnd, #6, 600 V, EPR insulation	324.29
S-2041-1	1-3/C + Gnd, #6, 600 V, EPR insulation	324.29
S-2042-1	1-3/C + Gnd, #6, 600 V, EPR insulation	324.29
UP202-8	2 + 1 Gnd, #10, #10, 600 V, RHH/RHW insulation	60.80

Conduit/Tray No:	5922	Reference:	E-118, E-130, E-133
Size:	103	Type:	RGS conduit
From:	TOS/COM Vault #1E	To:	PB-2E
Total Fill (mm2):	2599.62	Remarks:	
Allowable Fill (mm2):	3324.51		

Description of Changes:

Included Cable No.	Conductor Type	Area (mm2)
2143	1 - 2 pair, shielded #18 with IS/OA, 600 V, PVC jacket	98.10
2170	1 - 2 pair, shielded #18 with IS/OA, 600 V, PVC jacket	98.10
2473-2	50 pair #18, shielded pairs, IS/OS shield 600 V, XLPE insul., PVC jacket	1201.71
2474-2	50 pair #18, shielded pairs, IS/OS shield 600 V, XLPE insul., PVC jacket	1201.71
Pull Rope	Soft-Fiber Polyester	0.00

5 **ADDED PER ADDENDUM No. 5 DATED JULY 30, 2009**

CONDUIT AND TRAY SCHEDULE
YBI TRANSITION STRUCTURES GIRDER EB

E-338A

REVISED BY | DATE REVISED
JEFFRI HALIM | ELLERY LUCAS
CALCULATED-DESIGNED BY | CHECKED BY
CONSULTANT FUNCTIONAL SUPERVISOR
BEHZAD GOLEMOHAMADI

STATE OF CALIFORNIA - DEPARTMENT OF TRANSPORTATION
Caltrans

LAST REVISION 00-00-00 | DATE PLOTTED => 28-JUL-2009 | TIME PLOTTED => 06:49

Dist	COUNTY	ROUTE	KILOMETER POST TOTAL PROJECT	SHEET No.	TOTAL SHEETS
04	SF	80	12.7/13.2	457	806

Caltrans Metric

2/14/08
REGISTERED ELECTRICAL ENGINEER

6-23-08
PLANS APPROVAL DATE

REGISTERED PROFESSIONAL ENGINEER FADI WALIEDDINE No. 11465 Exp. 12/31/09 ELECTRICAL STATE OF CALIFORNIA

THE STATE OF CALIFORNIA OR ITS OFFICERS OR AGENTS SHALL NOT BE RESPONSIBLE FOR THE ACCURACY OR COMPLETENESS OF ELECTRONIC COPIES OF THIS PLAN SHEET.

PB AMERICAS, Inc.
A Parsons Brinckerhoff Company
303 Second St., Suite 700N
San Francisco, CA 94107-1317

Conduit/Tray No:	5983	Reference:	E-134
Size:	41	Type:	RGS conduit
From:	PB-LTG	To:	PB-LTG
Total Fill (mm2):	0.00	Remarks:	
Allowable Fill (mm2):	534.55		
Description of Changes:			

Included Cable No.	Conductor Type	Area (mm2)
Pull Rope	Soft-Fiber Polyester	0.00

Conduit/Tray No:	5984	Reference:	E-90, E-117
Size:	41	Type:	RGS conduit
From:	PB-LTG	To:	PB-LTG
Total Fill (mm2):	0.00	Remarks:	
Allowable Fill (mm2):	534.55		
Description of Changes:			

Included Cable No.	Conductor Type	Area (mm2)
Pull Rope	Soft-Fiber Polyester	0.00

Conduit/Tray No:	5985	Reference:	E-90, E-117
Size:	41	Type:	RGS conduit
From:	PB-COM	To:	PB-COM
Total Fill (mm2):	0.00	Remarks:	
Allowable Fill (mm2):	534.55		
Description of Changes:			

Included Cable No.	Conductor Type	Area (mm2)
Pull Rope	Soft-Fiber Polyester	0.00

Conduit/Tray No:	5986	Reference:	E-133
Size:	41	Type:	RGS conduit
From:	PB-LTG	To:	PB-2K
Total Fill (mm2):	0.00	Remarks:	
Allowable Fill (mm2):	534.55		
Description of Changes:			

Included Cable No.	Conductor Type	Area (mm2)
Pull Rope	Soft-Fiber Polyester	0.00

Conduit/Tray No:	5987	Reference:	E-130
Size:	41	Type:	RGS conduit
From:	Electrical Vault #1E	To:	PB-LTG
Total Fill (mm2):	311.89	Remarks:	
Allowable Fill (mm2):	534.55		
Description of Changes:			

Included Cable No.	Conductor Type	Area (mm2)
Pull Rope	Soft-Fiber Polyester	0.00
S-2041-3	1-3/C + Gnd, #8, 600 V, EPR insulation	262.68
UP201-12	2 + 1 Gnd, #12, #12, 600 V, RHH/RHW insulation	49.21

5

5

Conduit/Tray No:	5988	Reference:	E-119
Size:	41	Type:	RGS conduit
From:	PB-LTG	To:	PB-LTG (Bike Path)
Total Fill (mm2):	532.96	Remarks:	
Allowable Fill (mm2):	534.55		
Description of Changes:			

Included Cable No.	Conductor Type	Area (mm2)
LP217-1,3,5	1-4/C + Gnd, #8, 600 V, EPR insulation	266.48
LP217-2,4,6	1-4/C + Gnd, #8, 600 V, EPR insulation	266.48
Pull Rope	Soft-Fiber Polyester	0.00

Conduit/Tray No:	5989	Reference:	E-132
Size:	41	Type:	RGS conduit
From:	PB-LTG	To:	Electrical Vault #3E
Total Fill (mm2):	49.21	Remarks:	
Allowable Fill (mm2):	708.28		
Description of Changes:			

Included Cable No.	Conductor Type	Area (mm2)
Pull Rope	Soft-Fiber Polyester	0.00
UP203-2	2 + 1 Gnd, #12, #12, 600 V, RHH/RHW insulation	49.21

Conduit/Tray No:	5990	Reference:	E-130
Size:	41	Type:	RGS conduit
From:	PB-LTG	To:	PB-LTG
Total Fill (mm2):	0.00	Remarks:	
Allowable Fill (mm2):	534.55		
Description of Changes:			

Included Cable No.	Conductor Type	Area (mm2)
Pull Rope	Soft-Fiber Polyester	0.00

5 **REVISED PER ADDENDUM No. 5 DATED JULY 30, 2009**

CONDUIT AND TRAY SCHEDULE
YBI TRANSITION STRUCTURES GIRDER EB

E-338

REVISED BY | DATE REVISED
CARMELO RIVERA | ELLERY LUCAS
CALCULATED-DESIGNED BY | CHECKED BY
CONSULTANT FUNCTIONAL SUPERVISOR
BEHZAD GOLEMOHAMMADI
STATE OF CALIFORNIA - DEPARTMENT OF TRANSPORTATION
Caltrans

LAST REVISION 00-00-00 | DATE PLOTTED => 28-JUL-2009 | TIME PLOTTED => 06:50

Dist	COUNTY	ROUTE	KILOMETER POST TOTAL PROJECT	SHEET No.	TOTAL SHEETS
04	SF	80	12.7/13.2	457B	806

Caltrans Metric

5

4/10/09
REGISTERED ELECTRICAL ENGINEER

6-23-08
PLANS APPROVAL DATE

REGISTERED PROFESSIONAL ENGINEER
FADI WALIEDDINE
No. 11465
Exp. 12/31/09
ELECTRICAL
STATE OF CALIFORNIA

THE STATE OF CALIFORNIA OR ITS OFFICERS OR AGENTS SHALL NOT BE RESPONSIBLE FOR THE ACCURACY OR COMPLETENESS OF ELECTRONIC COPIES OF THIS PLAN SHEET.

PB AMERICAS, Inc.
A Parsons Brinckerhoff Company
303 Second St., Suite 700N
San Francisco, CA 94107-1317

Conduit/Tray No:	5922A
Reference:	E-106, E-119, E-131, E-133
Size:	103
Type:	RGS conduit
From:	PB-2E
To:	TOS/COM Vault #2E
Total Fill (mm2):	2599.62
Remarks:	
Allowable Fill (mm2):	3324.51
Description of Changes:	

Included Cable No.	Conductor Type	Area (mm2)
2143	1 - 2 pair, shielded #18 with IS/OA, 600 V, PVC jacket	98.10
2170	1 - 2 pair, shielded #18 with IS/OA, 600 V, PVC jacket	98.10
2473-2	50 pair #18, shielded pairs, IS/OS shield 600 V, XLPE insul., PVC jacket	1201.71
2474-2	50 pair #18, shielded pairs, IS/OS shield 600 V, XLPE insul., PVC jacket	1201.71
Pull Rope	Soft-Fiber Polyester	0.00

Conduit/Tray No:	5929
Reference:	E-131
Size:	53
Type:	RGS conduit
From:	Electrical Vault #2E
To:	PB-LTG (Bike Path)
Total Fill (mm2):	590.97
Remarks:	
Allowable Fill (mm2):	879.42
Description of Changes:	

Included Cable No.	Conductor Type	Area (mm2)
A-2010-1	1-3/C + Gnd, #8, 600 V, EPR insulation	262.68
Pull Rope	Soft-Fiber Polyester	0.00
S-2041-2	1-3/C + Gnd, #8, 600 V, EPR insulation	262.68
UP202-12	3 + 1 Gnd, #12, #12, 600 V, RHH/RHW insulation	65.61

Conduit/Tray No:	5936
Reference:	E-131, E-106
Size:	78
Type:	RGS-PVC coated conduit
From:	PB-2B (TOS/COM)
To:	TOS/COM Vault #2E
Total Fill (mm2):	316.24
Remarks:	
Allowable Fill (mm2):	2564.19
Description of Changes:	

Included Cable No.	Conductor Type	Area (mm2)
PLE02A	10 DLC	316.24
Pull Rope	Soft-Fiber Polyester	0.00

Conduit/Tray No:	5940
Reference:	E-131
Size:	53
Type:	RGS conduit
From:	PB-LTG (Bike Path)
To:	Electrical Vault #2E
Total Fill (mm2):	586.97
Remarks:	
Allowable Fill (mm2):	681.55
Description of Changes:	

Included Cable No.	Conductor Type	Area (mm2)
A-2007-1	1-3/C + Gnd, #6, 600 V, EPR insulation	324.29
A-2009-1	1-3/C + Gnd, #8, 600 V, EPR insulation	262.68
Pull Rope	Soft-Fiber Polyester	0.00

Conduit/Tray No:	5987
Reference:	E-130
Size:	41
Type:	RGS conduit
From:	Electrical Vault #1E
To:	PB-LTG
Total Fill (mm2):	262.68
Remarks:	
Allowable Fill (mm2):	708.28
Description of Changes:	

Included Cable No.	Conductor Type	Area (mm2)
Pull Rope	Soft-Fiber Polyester	0.00
S-2041-3	1-3/C + Gnd, #8, 600 V, EPR insulation	262.68

Conduit/Tray No:	5988
Reference:	E-119
Size:	53
Type:	RGS conduit
From:	PB-LTG
To:	PB-LTG (Bike Path)
Total Fill (mm2):	532.96
Remarks:	
Allowable Fill (mm2):	681.55
Description of Changes:	

Included Cable No.	Conductor Type	Area (mm2)
LP217-1,3,5	1-4/C + Gnd, #8, 600 V, EPR insulation	266.48
LP217-2,4,6	1-4/C + Gnd, #8, 600 V, EPR insulation	266.48
Pull Rope	Soft-Fiber Polyester	0.00

5 **ADDED PER ADDENDUM No. 5 DATED JULY 30, 2009**

CONDUIT AND TRAY SCHEDULE
YBI TRANSITION STRUCTURES GIRDER EB

E-338B

REVISED BY | DATE REVISED
JEFFRI HALIM | ELLERY LUCAS
CALCULATED-DESIGNED BY | CHECKED BY
CONSULTANT FUNCTIONAL SUPERVISOR
BEHZAD GOLEMOHAMMADI

STATE OF CALIFORNIA - DEPARTMENT OF TRANSPORTATION
Caltrans

LAST REVISION 00-00-00 | DATE PLOTTED => 28-JUL-2009 | TIME PLOTTED => 06:50

Dist	COUNTY	ROUTE	KILOMETER POST TOTAL PROJECT	SHEET No.	TOTAL SHEETS
04	SF	80	12.7/13.2	458	806

Caltrans Metric

2/14/08
REGISTERED ELECTRICAL ENGINEER

6-23-08
PLANS APPROVAL DATE

REGISTERED PROFESSIONAL ENGINEER
FADI WALIEDDINE
No. 11465
Exp. 12/31/09
ELECTRICAL
STATE OF CALIFORNIA

THE STATE OF CALIFORNIA OR ITS OFFICERS OR AGENTS SHALL NOT BE RESPONSIBLE FOR THE ACCURACY OR COMPLETENESS OF ELECTRONIC COPIES OF THIS PLAN SHEET.

PB AMERICAS, Inc.
A Parsons Brinckerhoff Company
303 Second St., Suite 700N
San Francisco, CA 94107-1317

Conduit/Tray No:	*9208
Reference:	E-160
Size:	27
Type:	RGS conduit
From:	9208
To:	Junction Box
Total Fill (mm2):	47.42
Remarks:	Existing conduit, add new cable (s) and pull rope thru the entire length of the connected conduits as listed below.
Allowable Fill (mm2):	303.46
Description of Changes:	

Included Cable No.	Conductor Type	Area (mm2)
2900-61A	4 pair #22, shielded pairs, FEP insulation (Type SSC)	47.42
Pull Rope	Soft-Fiber Polyester	0.00

Conduit/Tray No:	*9209
Reference:	E-159
Size:	27
Type:	RGS conduit
From:	9209
To:	Junction Box
Total Fill (mm2):	284.52
Remarks:	Existing conduit, add new cable (s) and pull rope thru the entire length of the connected conduits as listed below.
Allowable Fill (mm2):	303.46
Description of Changes:	

Included Cable No.	Conductor Type	Area (mm2)
2900-11A	4 pair #22, shielded pairs, FEP insulation (Type SSC)	47.42
2900-11B	4 pair #22, shielded pairs, FEP insulation (Type SSC)	47.42
2900-11C	4 pair #22, shielded pairs, FEP insulation (Type SSC)	47.42
2900-21A	4 pair #22, shielded pairs, FEP insulation (Type SSC)	47.42
2900-21B	4 pair #22, shielded pairs, FEP insulation (Type SSC)	47.42
2900-21C	4 pair #22, shielded pairs, FEP insulation (Type SSC)	47.42
Pull Rope	Soft-Fiber Polyester	0.00

Conduit/Tray No:	*9210
Reference:	E-159
Size:	27
Type:	RGS conduit
From:	9210
To:	Junction Box
Total Fill (mm2):	142.26
Remarks:	Existing conduit, add new cable (s) and pull rope thru the entire length of the connected conduits as listed below.
Allowable Fill (mm2):	303.46
Description of Changes:	

Included Cable No.	Conductor Type	Area (mm2)
2900-31A	4 pair #22, shielded pairs, FEP insulation (Type SSC)	47.42
2900-31B	4 pair #22, shielded pairs, FEP insulation (Type SSC)	47.42
2900-31C	4 pair #22, shielded pairs, FEP insulation (Type SSC)	47.42
Pull Rope	Soft-Fiber Polyester	0.00

5

Conduit/Tray No:	9010
Reference:	E-52
Size:	41
Type:	RGS conduit
From:	PB-COM
To:	PB-COM
Total Fill (mm2):	284.52
Remarks:	
Allowable Fill (mm2):	534.55
Description of Changes:	

Included Cable No.	Conductor Type	Area (mm2)
2900-111A	4 pair #22, shielded pairs, FEP insulation (Type SSC)	47.42
2900-111B	4 pair #22, shielded pairs, FEP insulation (Type SSC)	47.42
2900-121A	4 pair #22, shielded pairs, FEP insulation (Type SSC)	47.42
2900-121B	4 pair #22, shielded pairs, FEP insulation (Type SSC)	47.42
2900-121C	4 pair #22, shielded pairs, FEP insulation (Type SSC)	47.42
2900-81A	4 pair #22, shielded pairs, FEP insulation (Type SSC)	47.42
Pull Rope	Soft-Fiber Polyester	0.00

Conduit/Tray No:	9011
Reference:	E-52
Size:	41
Type:	RGS conduit
From:	PB-COM
To:	PB-COM
Total Fill (mm2):	284.52
Remarks:	
Allowable Fill (mm2):	534.55
Description of Changes:	

Included Cable No.	Conductor Type	Area (mm2)
2900-111A	4 pair #22, shielded pairs, FEP insulation (Type SSC)	47.42
2900-111B	4 pair #22, shielded pairs, FEP insulation (Type SSC)	47.42
2900-121A	4 pair #22, shielded pairs, FEP insulation (Type SSC)	47.42
2900-121B	4 pair #22, shielded pairs, FEP insulation (Type SSC)	47.42
2900-121C	4 pair #22, shielded pairs, FEP insulation (Type SSC)	47.42
2900-81A	4 pair #22, shielded pairs, FEP insulation (Type SSC)	47.42
Pull Rope	Soft-Fiber Polyester	0.00

5 REVISED PER ADDENDUM No. 5 DATED JULY 30, 2009

CONDUIT AND TRAY SCHEDULE
STRONG MOTION DETECTION SYSTEM

E-339

REVISED BY | DATE REVISED
CARMELO RIVERA | ELLERY LUCAS
CALCULATED-DESIGNED BY | CHECKED BY
CONSULTANT FUNCTIONAL SUPERVISOR
BEHZAD GOLEMOHAMMADI
STATE OF CALIFORNIA - DEPARTMENT OF TRANSPORTATION
Caltrans

LAST REVISION 00-00-00
DATE PLOTTED => 28-JUL-2009
TIME PLOTTED => 06:50

Dist	COUNTY	ROUTE	KILOMETER POST TOTAL PROJECT	SHEET No.	TOTAL SHEETS
04	SF	80	12.7/13.2	460	806

Caltrans Metric

2/14/08
REGISTERED ELECTRICAL ENGINEER

6-23-08
PLANS APPROVAL DATE

REGISTERED PROFESSIONAL ENGINEER
FADI WALIEDDINE
No. 11465
Exp. 12/31/09
ELECTRICAL
STATE OF CALIFORNIA

THE STATE OF CALIFORNIA OR ITS OFFICERS OR AGENTS SHALL NOT BE RESPONSIBLE FOR THE ACCURACY OR COMPLETENESS OF ELECTRONIC COPIES OF THIS PLAN SHEET.

PB AMERICAS, Inc.
A Parsons Brinckerhoff Company
303 Second St., Suite 700N
San Francisco, CA 94107-1317

5

Conduit/Tray No: 9101 | Reference: E-29, E-33, E-38, E-81, E-64, E-78
Size: 78 | Type: RGS conduit
From: Manhole-9 | To: TOS/COM Vault #1W
Total Fill (mm2): 1043.24 | Remarks:
Allowable Fill (mm2): 1935.24
Description of Changes:

Included Cable No.	Conductor Type	Area (mm2)
2900-111A	4 pair #22, shielded pairs, FEP insulation (Type SSC)	47.42
2900-111B	4 pair #22, shielded pairs, FEP insulation (Type SSC)	47.42
2900-11A	4 pair #22, shielded pairs, FEP insulation (Type SSC)	47.42
2900-11B	4 pair #22, shielded pairs, FEP insulation (Type SSC)	47.42
2900-11C	4 pair #22, shielded pairs, FEP insulation (Type SSC)	47.42
2900-121A	4 pair #22, shielded pairs, FEP insulation (Type SSC)	47.42
2900-121B	4 pair #22, shielded pairs, FEP insulation (Type SSC)	47.42
2900-121C	4 pair #22, shielded pairs, FEP insulation (Type SSC)	47.42
2900-21A	4 pair #22, shielded pairs, FEP insulation (Type SSC)	47.42
2900-21B	4 pair #22, shielded pairs, FEP insulation (Type SSC)	47.42
2900-21C	4 pair #22, shielded pairs, FEP insulation (Type SSC)	47.42
2900-31A	4 pair #22, shielded pairs, FEP insulation (Type SSC)	47.42
2900-31B	4 pair #22, shielded pairs, FEP insulation (Type SSC)	47.42
2900-31C	4 pair #22, shielded pairs, FEP insulation (Type SSC)	47.42
2900-41A	4 pair #22, shielded pairs, FEP insulation (Type SSC)	47.42
2900-41A	4 pair #22, shielded pairs, FEP insulation (Type SSC)	47.42
2900-41B	4 pair #22, shielded pairs, FEP insulation (Type SSC)	47.42
2900-41B	4 pair #22, shielded pairs, FEP insulation (Type SSC)	47.42
2900-51A	4 pair #22, shielded pairs, FEP insulation (Type SSC)	47.42
2900-51B	4 pair #22, shielded pairs, FEP insulation (Type SSC)	47.42
2900-51C	4 pair #22, shielded pairs, FEP insulation (Type SSC)	47.42
2900-81A	4 pair #22, shielded pairs, FEP insulation (Type SSC)	47.42
Pull Rope	Soft-Fiber Polyester	0.00

Conduit/Tray No: 9103 | Reference: E-81, E-64
Size: 41 | Type: RGS conduit
From: PB-COM | To: TOS/COM Vault #1W
Total Fill (mm2): 0.00 | Remarks:
Allowable Fill (mm2): 534.55
Description of Changes:

Included Cable No.	Conductor Type	Area (mm2)
Pull Rope	Soft-Fiber Polyester	0.00

Conduit/Tray No: 9105 | Reference: E-76, E-161
Size: 27 | Type: RGS conduit
From: Sensor 11-1 | To: PB-COM
Total Fill (mm2): 94.84 | Remarks:
Allowable Fill (mm2): 177.49
Description of Changes:

Included Cable No.	Conductor Type	Area (mm2)
2900-111A	4 pair #22, shielded pairs, FEP insulation (Type SSC)	47.42
2900-111B	4 pair #22, shielded pairs, FEP insulation (Type SSC)	47.42
Pull Rope	Soft-Fiber Polyester	0.00

Conduit/Tray No: 9106 | Reference: E-76, E-161
Size: 27 | Type: RGS conduit
From: Sensor 12-1 | To: PB-COM
Total Fill (mm2): 142.26 | Remarks:
Allowable Fill (mm2): 229.03
Description of Changes:

Included Cable No.	Conductor Type	Area (mm2)
2900-121A	4 pair #22, shielded pairs, FEP insulation (Type SSC)	47.42
2900-121B	4 pair #22, shielded pairs, FEP insulation (Type SSC)	47.42
2900-121C	4 pair #22, shielded pairs, FEP insulation (Type SSC)	47.42
Pull Rope	Soft-Fiber Polyester	0.00

Conduit/Tray No: 9108 | Reference: E-76, E-161
Size: 27 | Type: RGS conduit
From: Sensor 8-1 | To: PB-COM
Total Fill (mm2): 47.42 | Remarks:
Allowable Fill (mm2): 303.46
Description of Changes:

Included Cable No.	Conductor Type	Area (mm2)
2900-81A	4 pair #22, shielded pairs, FEP insulation (Type SSC)	47.42
Pull Rope	Soft-Fiber Polyester	0.00

5 REVISED PER ADDENDUM No. 5 DATED JULY 30, 2009

CONDUIT AND TRAY SCHEDULE
STRONG MOTION DETECTION SYSTEM

E-341

REVISED BY | DATE REVISED
CARMELO RIVERA | ELLERY LUCAS
CALCULATED-DESIGNED BY | CHECKED BY
CONSULTANT FUNCTIONAL SUPERVISOR
BEHZAD GOLEMOHAMMADI
STATE OF CALIFORNIA - DEPARTMENT OF TRANSPORTATION
Caltrans

LAST REVISION 00-00-00 | DATE PLOTTED => 28-JUL-2009 | TIME PLOTTED => 06:50

Dist	COUNTY	ROUTE	KILOMETER POST TOTAL PROJECT	SHEET No.	TOTAL SHEETS
04	SF	80	12.7/13.2	466A	806

REGISTERED ELECTRICAL ENGINEER 4/10/09

6-23-08
PLANS APPROVAL DATE

REGISTERED PROFESSIONAL ENGINEER FADI WALIEDDINE No. 11465 Exp. 12/31/09 ELECTRICAL STATE OF CALIFORNIA

THE STATE OF CALIFORNIA OR ITS OFFICERS OR AGENTS SHALL NOT BE RESPONSIBLE FOR THE ACCURACY OR COMPLETENESS OF ELECTRONIC COPIES OF THIS PLAN SHEET.

PB AMERICAS, Inc.
A Parsons Brinckerhoff Company
303 Second St., Suite 700N
San Francisco, CA 94107-1317

Caltrans Metric

Conduit/Tray No:	*9209	Reference:	E-159
Size:	41	Type:	RGS conduit
From:	9209	To:	Junction Box
Total Fill (mm2):	284.52	Remarks:	Existing conduit, add new cable (s) and pull rope thru the entire length of the connected conduits as listed below.
Allowable Fill (mm2):	534.55		

Description of Changes:

Included Cable No.	Conductor Type	Area (mm2)
2900-11A	4 pair #22, shielded pairs, FEP insulation (Type SSC)	47.42
2900-11B	4 pair #22, shielded pairs, FEP insulation (Type SSC)	47.42
2900-11C	4 pair #22, shielded pairs, FEP insulation (Type SSC)	47.42
2900-21A	4 pair #22, shielded pairs, FEP insulation (Type SSC)	47.42
2900-21B	4 pair #22, shielded pairs, FEP insulation (Type SSC)	47.42
2900-21C	4 pair #22, shielded pairs, FEP insulation (Type SSC)	47.42
Pull Rope	Soft-Fiber Polyester	0.00

Conduit/Tray No:	9012	Reference:	E-52
Size:	41	Type:	RGS conduit
From:	PB-COM	To:	PB-COM
Total Fill (mm2):	284.52	Remarks:	
Allowable Fill (mm2):	534.55		

Description of Changes:

Included Cable No.	Conductor Type	Area (mm2)
2900-111A	4 pair #22, shielded pairs, FEP insulation (Type SSC)	47.42
2900-111B	4 pair #22, shielded pairs, FEP insulation (Type SSC)	47.42
2900-121A	4 pair #22, shielded pairs, FEP insulation (Type SSC)	47.42
2900-121B	4 pair #22, shielded pairs, FEP insulation (Type SSC)	47.42
2900-121C	4 pair #22, shielded pairs, FEP insulation (Type SSC)	47.42
2900-81A	4 pair #22, shielded pairs, FEP insulation (Type SSC)	47.42
Pull Rope	Soft-Fiber Polyester	0.00

Conduit/Tray No:	9013	Reference:	E-52, E-78
Size:	41	Type:	RGS conduit
From:	PB-COM	To:	PB-COM
Total Fill (mm2):	284.52	Remarks:	
Allowable Fill (mm2):	534.55		

Description of Changes:

Included Cable No.	Conductor Type	Area (mm2)
2900-111A	4 pair #22, shielded pairs, FEP insulation (Type SSC)	47.42
2900-111B	4 pair #22, shielded pairs, FEP insulation (Type SSC)	47.42
2900-121A	4 pair #22, shielded pairs, FEP insulation (Type SSC)	47.42
2900-121B	4 pair #22, shielded pairs, FEP insulation (Type SSC)	47.42
2900-121C	4 pair #22, shielded pairs, FEP insulation (Type SSC)	47.42
2900-81A	4 pair #22, shielded pairs, FEP insulation (Type SSC)	47.42
Pull Rope	Soft-Fiber Polyester	0.00

Conduit/Tray No:	9014	Reference:	E-66
Size:	41	Type:	RGS conduit
From:	PB-COM	To:	TOS/COM Vault #3W
Total Fill (mm2):	284.52	Remarks:	
Allowable Fill (mm2):	534.55		

Description of Changes:

Included Cable No.	Conductor Type	Area (mm2)
2900-111A	4 pair #22, shielded pairs, FEP insulation (Type SSC)	47.42
2900-111B	4 pair #22, shielded pairs, FEP insulation (Type SSC)	47.42
2900-121A	4 pair #22, shielded pairs, FEP insulation (Type SSC)	47.42
2900-121B	4 pair #22, shielded pairs, FEP insulation (Type SSC)	47.42
2900-121C	4 pair #22, shielded pairs, FEP insulation (Type SSC)	47.42
2900-81A	4 pair #22, shielded pairs, FEP insulation (Type SSC)	47.42
Pull Rope	Soft-Fiber Polyester	0.00

Conduit/Tray No:	9101	Reference:	E-29, E-33, E-38, E-81, E-64, E-78
Size:	78	Type:	RGS conduit
From:	Manhole-9	To:	TOS/COM Vault #1W
Total Fill (mm2):	948.40	Remarks:	
Allowable Fill (mm2):	1935.24		

Description of Changes:

Included Cable No.	Conductor Type	Area (mm2)
2900-111A	4 pair #22, shielded pairs, FEP insulation (Type SSC)	47.42
2900-111B	4 pair #22, shielded pairs, FEP insulation (Type SSC)	47.42
2900-11A	4 pair #22, shielded pairs, FEP insulation (Type SSC)	47.42
2900-11B	4 pair #22, shielded pairs, FEP insulation (Type SSC)	47.42
2900-11C	4 pair #22, shielded pairs, FEP insulation (Type SSC)	47.42
2900-121A	4 pair #22, shielded pairs, FEP insulation (Type SSC)	47.42
2900-121B	4 pair #22, shielded pairs, FEP insulation (Type SSC)	47.42
2900-121C	4 pair #22, shielded pairs, FEP insulation (Type SSC)	47.42
2900-21A	4 pair #22, shielded pairs, FEP insulation (Type SSC)	47.42
2900-21B	4 pair #22, shielded pairs, FEP insulation (Type SSC)	47.42
2900-21C	4 pair #22, shielded pairs, FEP insulation (Type SSC)	47.42
2900-31A	4 pair #22, shielded pairs, FEP insulation (Type SSC)	47.42
2900-31B	4 pair #22, shielded pairs, FEP insulation (Type SSC)	47.42
2900-31C	4 pair #22, shielded pairs, FEP insulation (Type SSC)	47.42
2900-41A	4 pair #22, shielded pairs, FEP insulation (Type SSC)	47.42
2900-41B	4 pair #22, shielded pairs, FEP insulation (Type SSC)	47.42
2900-51A	4 pair #22, shielded pairs, FEP insulation (Type SSC)	47.42
2900-51B	4 pair #22, shielded pairs, FEP insulation (Type SSC)	47.42
2900-51C	4 pair #22, shielded pairs, FEP insulation (Type SSC)	47.42
2900-81A	4 pair #22, shielded pairs, FEP insulation (Type SSC)	47.42
Pull Rope	Soft-Fiber Polyester	0.00

5 **ADDED PER ADDENDUM No. 5 DATED JULY 30, 2009**

CONDUIT AND TRAY SCHEDULE
STRONG MOTION DETECTION SYSTEM

E-347A

REVISED BY	DATE REVISED
JEFFRI HALIM	ELLERY LUCAS
CALCULATED-DESIGNED BY	CHECKED BY
CONSULTANT FUNCTIONAL SUPERVISOR	BEHZAD GOLEMOHAMMADI

STATE OF CALIFORNIA - DEPARTMENT OF TRANSPORTATION
Caltrans

LAST REVISION 00-00-00 DATE PLOTTED => 28-JUL-2009 TIME PLOTTED => 06:51

Dist	COUNTY	ROUTE	KILOMETER POST TOTAL PROJECT	SHEET No.	TOTAL SHEETS
04	SF	80	12.7/13.2	467	806

Caltrans Metric

6/25/08
REGISTERED ELECTRICAL ENGINEER

6-23-08
PLANS APPROVAL DATE

REGISTERED PROFESSIONAL ENGINEER
FADI WALIEDDINE
No. 11465
Exp. 12/31/09
ELECTRICAL
STATE OF CALIFORNIA

THE STATE OF CALIFORNIA OR ITS OFFICERS OR AGENTS SHALL NOT BE RESPONSIBLE FOR THE ACCURACY OR COMPLETENESS OF ELECTRONIC COPIES OF THIS PLAN SHEET.

PB AMERICAS, Inc.
A Parsons Brinckerhoff Company
303 Second St., Suite 700N
San Francisco, CA 94107-1317

Cable/Ckt #: 1091 | Reference: E-40, E-70
Function: 480 V Feeder | Conductor Type: 1-3/C + Gnd, #6, 600 V, EPR insulation
From: (E) 480 V LVCC-A Cubicle #13A | To: 480 V Breaker for UP-101
Remarks:
Description Of Changes:

Route	Conduit No.	Route	Conduit No.	Route	Conduit No.	Route	Conduit No.
1	036	2	T20	3	600 V PB	4	0126
5	MH-5	6	0170	7	MH-7	8	0228
9	MH-30	10	4212	11	E. Vault #1W	12	1T21W
13	4922	14	Wireway #1W	15	5971		

5

Cable/Ckt #: 1091-1 | Reference: E-70
Function: 480 V Feeder | Conductor Type: 1-3/C + Gnd, #8, 600 V, EPR insulation
From: 15 KVA Transformer for UP-101 | To: 480 V Breaker for UP-101
Remarks:
Description Of Changes:

Route	Conduit No.	Route	Conduit No.	Route	Conduit No.	Route	Conduit No.
1	5907						

Cable/Ckt #: 1091-2 | Reference: E-70
Function: 208/120 V Feeder | Conductor Type: 1-4/C + Gnd, #4, 600 V, EPR insulation
From: 15 KVA Transformer for UP-101 | To: Panel UP-101
Remarks:
Description Of Changes:

Route	Conduit No.	Route	Conduit No.	Route	Conduit No.	Route	Conduit No.
1	5996	2	Wireway #1W	3	4001		

Cable/Ckt #: 1092 | Reference: E-40, E-70
Function: 480 V Feeder | Conductor Type: 1-3/C + Gnd, #4, 600 V, EPR insulation
From: (E) 480 V LVCC-A Cubicle #13B | To: 480 V Breaker for UP-102
Remarks:
Description Of Changes:

Route	Conduit No.	Route	Conduit No.	Route	Conduit No.	Route	Conduit No.
1	036	2	T20	3	600 V PB	4	0126
5	MH-5	6	0170	7	MH-7	8	0228
9	MH-30	10	4212	11	E. Vault #1W	12	1T21W
13	4903	14	PB-2E	15	4930	16	E. Vault #2W
17	1T22W	18	4963	19	Wireway #2W	20	5974

5

Cable/Ckt #: 1092-1 | Reference: E-70
Function: 480 V Feeder | Conductor Type: 1-3/C + Gnd, #8, 600 V, EPR insulation
From: 480 V Breaker for UP-102 | To: 15 kVA Transformer for UP-102
Remarks:
Description Of Changes:

Route	Conduit No.	Route	Conduit No.	Route	Conduit No.	Route	Conduit No.
1	5972						

5

Cable/Ckt #: 1092-2 | Reference: E-70
Function: 208/120 V Feeder | Conductor Type: 1-4/C + Gnd, #4, 600 V, EPR insulation
From: 15 kVA Transformer for UP-102 | To: Panel UP-102
Remarks:
Description Of Changes:

Route	Conduit No.	Route	Conduit No.	Route	Conduit No.	Route	Conduit No.
1	5973	2	Wireway #2W	3	4021		

Cable/Ckt #: 1093 | Reference: E-40, E-71
Function: 480 V Feeder | Conductor Type: 1-3/C + Gnd, #4, 600 V, EPR insulation
From: (E) 480 V LVCC-A Cubicle #14A | To: 480 V Breaker for UP-103
Remarks:
Description Of Changes:

Route	Conduit No.	Route	Conduit No.	Route	Conduit No.	Route	Conduit No.
1	036	2	T20	3	600 V PB	4	0126
5	MH-5	6	0170	7	MH-7	8	0228
9	MH-30	10	4212	11	E. Vault #1W	12	1T21W
13	4903	14	PB-2E	15	4930	16	E. Vault #2W
17	1T22W	18	4957	19	E. Vault #3W	20	4983
20	1T23W	21	Wireway #3W	22	5992		

5

CABLE AND CIRCUIT SCHEDULE

5 REVISED PER ADDENDUM No. 5 DATED JULY 30, 2009

E-348

REVISED BY	DATE REVISED
CARMELO RIVERA	ELLERY LUCAS

CALCULATED-DESIGNED BY / CHECKED BY

CONSULTANT FUNCTIONAL SUPERVISOR: BEHZAD GOLEMOHAMMADI

STATE OF CALIFORNIA - DEPARTMENT OF TRANSPORTATION
Caltrans

LAST REVISION 00-00-00 | DATE PLOTTED => 28-JUL-2009 | TIME PLOTTED => 06:51

Dist	COUNTY	ROUTE	KILOMETER POST TOTAL PROJECT	SHEET No.	TOTAL SHEETS
04	SF	80	12.7/13.2	468	806

Caltrans Metric

6/25/08
REGISTERED ELECTRICAL ENGINEER

6-23-08
PLANS APPROVAL DATE

REGISTERED PROFESSIONAL ENGINEER
FADI WALIEDDINE
No. 11465
Exp. 12/31/09
ELECTRICAL
STATE OF CALIFORNIA

THE STATE OF CALIFORNIA OR ITS OFFICERS OR AGENTS SHALL NOT BE RESPONSIBLE FOR THE ACCURACY OR COMPLETENESS OF ELECTRONIC COPIES OF THIS PLAN SHEET.

PB AMERICAS, Inc.
A Parsons Brinckerhoff Company
303 Second St., Suite 700N
San Francisco, CA 94107-1317

~~Cable/Ckt #: 1093-1 | Reference: E-71~~
~~Function: 480 V Feeder | Conductor Type: 1-3/C + Gnd, #8, 600 V, EPR insulation~~
~~From: 480 V Breaker for UP-103 | To: 15 KVA Transformer for UP-103~~
~~Remarks:~~
~~Description Of Changes:~~

Route	Conduit No.	Route	Conduit No.	Route	Conduit No.	Route	Conduit No.
~~1~~	~~5991~~						

5

Cable/Ckt #: 1093-2 | Reference: E-71
Function: 208/120 V Feeder | Conductor Type: 1-4/C + Gnd, #4, 600 V, EPR insulation
From: 15 KVA Transformer for UP-103 | To: Panel UP-103
Remarks:
Description Of Changes:

Route	Conduit No.	Route	Conduit No.	Route	Conduit No.	Route	Conduit No.
1	5997	2	Wireway #3W	3	4051		

Cable/Ckt #: 1094 | Reference: E-40, E-72
Function: 480 V Feeder | Conductor Type: 1-3/C + Gnd, #2, 600 V, EPR insulation
From: (E) 480 V LVCC-A Cubicle #14B | To: 480 V Breaker for UP-109
Remarks:
Description Of Changes:

Route	Conduit No.	Route	Conduit No.	Route	Conduit No.	Route	Conduit No.
1	036	2	T20	3	600 V PB	4	0126
5	MH-5	6	0170	7	MH-7	8	0228
9	MH-30	10	4212	11	E. Vault #1W	12	1T21W
13	4903	14	PB-2E	15	4930	16	E. Vault #2W
17	1T22W	18	4957	19	E. Vault #3W	20	1T23W
21	4981	22	Wireway #3W	23	5995		

Cable/Ckt #: 1094-1 | Reference: E-72
Function: 480 V Feeder | Conductor Type: 1-3/C + Gnd, #2, 600 V, EPR insulation
From: 480 V Breaker for UP-109 | To: 30 kVA Tansformer for UP-109
Remarks:
Description Of Changes:

Route	Conduit No.	Route	Conduit No.	Route	Conduit No.	Route	Conduit No.
1	5994	2	Wireway #3W	3	5994A	4	Wireway #3W
5	5993						

Cable/Ckt #: 1094-2 | Reference: E-72
Function: 208/120 V Feeder | Conductor Type: 1-3/C + Gnd, #1/0, 600 V, EPR insulation
From: 25 kVA Transformer for UP-109 | To: Panel UP-109
Remarks:
Description Of Changes:

Route	Conduit No.	Route	Conduit No.	Route	Conduit No.	Route	Conduit No.
1	5993A	2	Wireway #3W	3	4061		

Cable/Ckt #: 1095 | Reference: E-41
Function: 480 V Feeder | Conductor Type: 1-3/C + Gnd, #2, 600 V, EPR insulation
From: (E) 480 V LVCC-A Cubicle #19A | To: (E) Manhole-25
Remarks: Splice cable to (E) cable inside MH. The same circuit number installed on previous contract. (For UP-104)
Description Of Changes:

Route	Conduit No.	Route	Conduit No.	Route	Conduit No.	Route	Conduit No.
1	040	2	T20	3	600 V PB	4	0114
5	MH-5	6	0154	7	MH-7	8	0205
9	MH-10	10	0302	11	MH-13	12	0352
13	*0352	14	MH-16	15	0402	16	MH-19
17	0452	18	MH-22	19	*0502	20	0502
21	MH-25						

CABLE AND CIRCUIT SCHEDULE

5 **REVISED PER ADDENDUM No. 5 DATED JULY 30, 2009**

E-349

REVISED BY | DATE REVISED
CARMELO RIVERA | ELLERY LUCAS
CALCULATED-DESIGNED BY | CHECKED BY
CONSULTANT FUNCTIONAL SUPERVISOR
BEHZAD GOLEMOHAMMADI
STATE OF CALIFORNIA - DEPARTMENT OF TRANSPORTATION
Caltrans

LAST REVISION 00-00-00 | DATE PLOTTED => 28-JUL-2009 | TIME PLOTTED => 0651

Dist	COUNTY	ROUTE	KILOMETER POST TOTAL PROJECT	SHEET No.	TOTAL SHEETS
04	SF	80	12.7/13.2	470	806

Caltrans Metric

6/25/08
REGISTERED ELECTRICAL ENGINEER

6-23-08
PLANS APPROVAL DATE

REGISTERED PROFESSIONAL ENGINEER
FADI WALIEDDINE
No. 11465
Exp. 12/31/09
ELECTRICAL
STATE OF CALIFORNIA

THE STATE OF CALIFORNIA OR ITS OFFICERS OR AGENTS SHALL NOT BE RESPONSIBLE FOR THE ACCURACY OR COMPLETENESS OF ELECTRONIC COPIES OF THIS PLAN SHEET.

PB AMERICAS, Inc.
A Parsons Brinckerhoff Company
303 Second St., Suite 700N
San Francisco, CA 94107-1317

Cable/Ckt #: 1106 | Reference: E-42
Function: 480 V Power | Conductor Type: 1-3/C + Gnd, #6, 600 V, EPR insulation
From: (E) 480 V LVCC-A Cubicle #48 | To: (E) Manhole-25
Remarks: Splice cable to (E) cable inside MH. The same circuit number installed on previous contract.
Description Of Changes:

Route	Conduit No.	Route	Conduit No.	Route	Conduit No.	Route	Conduit No.
1	060	2	T20	3	600 V PB	4	0116
5	MH-5	6	0158	7	MH-7	8	0209
9	MH-10	10	0306	11	MH-13	12	0356
13	*0356	14	MH-16	15	0406	16	MH-19
17	0456	18	MH-22	19	*0506	20	0506
21	MH-25						

5

Cable/Ckt #: 1115 | Reference: E-40
Function: 480 V Power | Conductor Type: 1-3/C + Gnd, #1/0, 600 V, EPR insulation
From: (E) 480 V LVCC-A Cubicle #9 | To: (E) Manhole-25
Remarks: Splice cable to (E) cable inside MH. The same circuit number installed on previous contract.
Description Of Changes:

Route	Conduit No.	Route	Conduit No.	Route	Conduit No.	Route	Conduit No.
1	0132	2	MH-5	3	0164	4	MH-7
5	0206	6	MH-10	7	0303	8	MH-13
9	*0353	10	0353	11	MH-16	12	0403
13	MH-19	14	0453	15	MH-22	15	*0503
16	0503	18	MH-25				

Cable/Ckt #: 1117 | Reference: E-40
Function: 480 V Power | Conductor Type: 1-3/C + Gnd, #2/0, 600 V, EPR insulation
From: (E) 480 V LVCC-A Cubicle #10 | To: (E) Manhole-25
Remarks: Splice cable to (E) cable inside MH. The same circuit number installed on previous contract.
Description Of Changes:

5

Route	Conduit No.	Route	Conduit No.	Route	Conduit No.	Route	Conduit No.
1	0132	2	MH-5	3	0164	4	MH-7
5	0206	6	MH-10	7	0303	8	MH-13
9	*0353	10	0353	11	MH-16	12	0403
13	MH-19	14	0453	15	MH-22	16	*0503
17	0503	18	MH-25				

5

Cable/Ckt #: 1118 | Reference: E-40
Function: 480 V Power | Conductor Type: 1-3/C + Gnd, #2/0, 600 V, EPR insulation
From: (E) 480 V LVCC-A Cubicle #11 | To: (E) Manhole-25
Remarks: Splice cable to (E) cable inside MH. The same circuit number installed on previous contract.
Description Of Changes:

Route	Conduit No.	Route	Conduit No.	Route	Conduit No.	Route	Conduit No.
1	0132	2	MH-5	3	0164	4	MH-7
5	0206	6	MH-10	7	0303	8	MH-13
9	*0353	10	0353	11	MH-16	12	0403
13	MH-19	14	0453	15	MH-22	16	*0503
17	0503	18	MH-25				

Cable/Ckt #: 1148 | Reference: E-141, E-170
Function: Scada Data Com | Conductor Type: 1 - 2 pair, shielded #18 with 1S/OA, 600 V, PVC jacket
From: Remote Terminal Unit RTU #9W | To: Call Box CB-139B
Remarks:
Description Of Changes:

5

Route	Conduit No.	Route	Conduit No.	Route	Conduit No.	Route	Conduit No.
1	RTU #9W	2	4068	3	PB-2B	4	4059
5	1T43W	6	TC Vault 3W	7	9015	8	1T42W
9	TC Vault #2W	9	PB-2A	10	4948	11	PB-2A
12	4906	13	4926	13	1T41W	14	TC Vault #1W
15	4009	16	1511	17	CB-139B		

CABLE AND CIRCUIT SCHEDULE

5 **REVISED PER ADDENDUM No. 5 DATED JULY 30, 2009**

E-351

STATE OF CALIFORNIA - DEPARTMENT OF TRANSPORTATION
Caltrans

CONSULTANT FUNCTIONAL SUPERVISOR: BEHZAD GOLEMOHAMMADI
CALCULATED-DESIGNED BY: CARMELO RIVERA
CHECKED BY: ELLERY LUCAS
REVISED BY / DATE REVISED

LAST REVISION 00-00-00 | DATE PLOTTED => 28-JUL-2009 | TIME PLOTTED => 06:51

Dist	COUNTY	ROUTE	KILOMETER POST TOTAL PROJECT	SHEET No.	TOTAL SHEETS
04	SF	80	12.7/13.2	473	806

6/25/08
REGISTERED ELECTRICAL ENGINEER

6-23-08
PLANS APPROVAL DATE

REGISTERED PROFESSIONAL ENGINEER FADI WALIEDDINE No. 11465 Exp. 12/31/09 ELECTRICAL STATE OF CALIFORNIA

THE STATE OF CALIFORNIA OR ITS OFFICERS OR AGENTS SHALL NOT BE RESPONSIBLE FOR THE ACCURACY OR COMPLETENESS OF ELECTRONIC COPIES OF THIS PLAN SHEET.

PB AMERICAS, Inc.
A Parsons Brinckerhoff Company
303 Second St., Suite 700N
San Francisco, CA 94107-1317

Caltrans Metric

Cable/Ckt #: 1474-3B
Reference: E-138, E-141, E-143
Function: Scada Data Com
Conductor Type: 1 - 6 pair, shielded #18 with overall shield , 600 V, PVC jacket
From: Remote Terminal Unit RTU #9W
To: Scada Com. Terminal Box COM-03W
Remarks:
Description Of Changes:

Route	Conduit No.	Route	Conduit No.	Route	Conduit No.	Route	Conduit No.
1	4062						

Cable/Ckt #: 1474-4
Reference: E-138
Function: Scada Data Com
Conductor Type: 50 pair #18, shielded pairs, IS/OS shield 600 V, XLPE insul., PVC jacket
From: (E) Scada Com. Terminal Box COM-YBI
To: (E) Manhole-27
Remarks: Splice cable to (E) cable inside MH. The same circuit number installed on previous contract.
Description Of Changes:

Route	Conduit No.	Route	Conduit No.	Route	Conduit No.	Route	Conduit No.
1	261	2	0097	3	MH-4	4	0184
5	MH-9	6	0262	7	MH-12	8	0312
9	MH-15	10	0362	11	*0362	12	MH-18
13	0412	14	MH-21	15	0462	16	MH-24
17	*0512	18	0512	19	MH-27		

Cable/Ckt #: 1475-1
Reference: E-153
Function: TOS Data Com
Conductor Type: 72 Fiber, single mode fiber optic riser cable
From: (E) Splice Cabinet #TOS-Y03S
To: Splice Cabinet #TOS-01WS
Remarks:
Description Of Changes:

Route	Conduit No.	Route	Conduit No.	Route	Conduit No.	Route	Conduit No.
1	TOS-Y03S	2	203	3	T40	4	TOS/COM PB
5	0090	6	MH-4	7	0180	8	MH-9
9	4217	10	TC Vault #1W	11	1T41W	12	4926
13	4017	14	TOS-01WS				

Cable/Ckt #: 1475-1A
Reference: E-153
Function: TOS Data Com
Conductor Type: 12 Fiber, single mode fiber optic cable
From: Splice Cabinet #TOS-03WS
To: Controller Cabinet #TOS-03WA
Remarks:
Description Of Changes:

Route	Conduit No.	Route	Conduit No.	Route	Conduit No.	Route	Conduit No.
1	4064	2	4065				

Cable/Ckt #: 1475-1B
Reference: E-153
Function: TOS Data Com
Conductor Type: 12 Fiber, single mode fiber optic cable
From: Splice Cabinet #TOS-03WS
To: Controller Cabinet #TOS-03WB
Remarks:
Description Of Changes:

Route	Conduit No.	Route	Conduit No.	Route	Conduit No.	Route	Conduit No.
1	4064	2	4066				

Cable/Ckt #: 1475-1C
Reference: E-153
Function: TOS Data Com
Conductor Type: 12 Fiber, single mode fiber optic cable
From: Splice Cabinet #TOS-01WS
To: Controller Cabinet #TOS-01WA
Remarks:
Description Of Changes:

Route	Conduit No.	Route	Conduit No.	Route	Conduit No.	Route	Conduit No.
1	4014	2	4015				

Cable/Ckt #: 1475-2
Reference: E-153
Function: TOS Data Com
Conductor Type: 72 Fiber, single mode fiber optic riser cable
From: Splice Cabinet #TOS-01WS
To: Splice Cabinet TOS-03WS
Remarks:
Description Of Changes:

Route	Conduit No.	Route	Conduit No.	Route	Conduit No.	Route	Conduit No.
1	TOS-01WS	2	4017	3	4925	4	1T41W
5	TC Vault #1W	6	4905	7	PB-2A	8	4948
9	TC Vault #2W	10	1T42W	11	4996	12	TC Vault 3W
13	1T43W	14	4067	15	TOS-03WS		

CABLE AND CIRCUIT SCHEDULE

5 REVISED PER ADDENDUM No. 5 DATED JULY 30, 2009

E-354

REVISED BY | DATE REVISED
CARMELO RIVERA | ELLERY LUCAS
CALCULATED-DESIGNED BY | CHECKED BY
CONSULTANT FUNCTIONAL SUPERVISOR
BEHZAD GOLEMOHAMMADI
STATE OF CALIFORNIA - DEPARTMENT OF TRANSPORTATION
Caltrans

LAST REVISION 00-00-00
DATE PLOTTED => 28-JUL-2009
TIME PLOTTED => 06:51

Dist	COUNTY	ROUTE	KILOMETER POST TOTAL PROJECT	SHEET No.	TOTAL SHEETS
04	SF	80	12.7/13.2	476	806

6/25/08
REGISTERED ELECTRICAL ENGINEER

6-23-08
PLANS APPROVAL DATE

REGISTERED PROFESSIONAL ENGINEER
FADI WALIEDDINE
No. 11465
Exp. 12/31/09
ELECTRICAL
STATE OF CALIFORNIA

THE STATE OF CALIFORNIA OR ITS OFFICERS OR AGENTS SHALL NOT BE RESPONSIBLE FOR THE ACCURACY OR COMPLETENESS OF ELECTRONIC COPIES OF THIS PLAN SHEET.

PB AMERICAS, Inc.
A Parsons Brinckerhoff Company
303 Second St., Suite 700N
San Francisco, CA 94107-1317

Cable/Ckt #: 2094-2 | Reference: E-113
Function: 120/240 V Power | Conductor Type: 1-3/C + Gnd, #1/0, 600 V, EPR insulation
From: 25 kVA Transformer for UP-209 | To: 120/240 V Panel UP-209
Remarks:
Description Of Changes:

Route	Conduit No.	Route	Conduit No.	Route	Conduit No.	Route	Conduit No.
1	5406A	2	Wireway #3E	3	5062		

Cable/Ckt #: 2095 | Reference: E-43
Function: 480 V Feeder | Conductor Type: 1-3/C + Gnd, #2, 600 V, EPR insulation
From: (E) 480 V LVCC-B Cubicle #13A | To: (E) Manhole-25
Remarks: Splice cable to (E) cable inside MH. The same circuit number installed on previous contract. (For UP-204)
Description Of Changes:

Route	Conduit No.	Route	Conduit No.	Route	Conduit No.	Route	Conduit No.
1	089	2	T21	3	T20	4	600 V PB
5	*0082	6	0082	7	MH-7	8	0234
9	MH-10	10	0330	11	MH-13	12	0380
13	*0380	14	MH-16	15	0430	16	MH-19
17	0480	18	MH-22	19	*0530	20	0530
21	MH-25						

Cable/Ckt #: 2096 | Reference: E-43
Function: 480 V Feeder | Conductor Type: 1-3/C + Gnd, #2, 600 V, EPR insulation
From: (E) 480 V LVCC-B Cubicle #13B | To: (E) Manhole-25
Remarks: Splice cable to (E) cable inside MH. The same circuit number installed on previous contract. (For UP-205)
Description Of Changes:

Route	Conduit No.	Route	Conduit No.	Route	Conduit No.	Route	Conduit No.
1	089	2	T21	3	T20	4	600 V PB
5	*0082	6	0082	7	0234	7	MH-7
9	MH-10	10	0330	11	MH-13	12	0380
13	*0380	14	MH-16	15	0430	16	MH-19
17	0480	18	MH-22	19	*0530	20	0530
21	MH-25						

Cable/Ckt #: 2097 | Reference: E-43
Function: 480 V Feeder | Conductor Type: 1-3/C + Gnd, #2, 600 V, EPR insulation
From: (E) 480 V LVCC-B Cubicle #14A | To: (E) Manhole-25
Remarks: UP-206 Splice cable to (E) cable inside MH. The same circuit number installed on previous contract. (For UP-206)
Description Of Changes:

Route	Conduit No.	Route	Conduit No.	Route	Conduit No.	Route	Conduit No.
1	089	2	T21	3	T20	4	600 V PB
5	*0082	6	0082	7	MH-7	8	0234
9	MH-10	10	0330	11	MH-13	12	0380
13	*0380	14	MH-16	15	0430	16	MH-19
17	0480	18	MH-22	19	*0530	20	0530
21	MH-25						

Cable/Ckt #: 2098 | Reference: E-44
Function: 480 V Feeder | Conductor Type: 1-3/C + Gnd, #2, 600 V, EPR insulation
From: (E) 480 V LVCC-B Cubicle #19A | To: (E) Manhole-25
Remarks: Splice cable to (E) cable inside MH. The same circuit number installed on previous contract. (For UP-207)
Description Of Changes:

Route	Conduit No.	Route	Conduit No.	Route	Conduit No.	Route	Conduit No.
1	093	2	T31	3	T30	4	600 V PB
5	*0082	6	0082	7	MH-7	8	0234
9	MH-10	10	0330	11	MH-13	12	0380
13	*0380	14	MH-16	15	0430	16	MH-19
17	0480	18	MH-22	19	*0530	20	0530
21	MH-25						

5 REVISED PER ADDENDUM No. 5 DATED JULY 30, 2009

CABLE AND CIRCUIT SCHEDULE

E-357

REVISED BY | DATE REVISED
CARMELO RIVERA | ELLERY LUCAS
CALCULATED-DESIGNED BY | CHECKED BY
CONSULTANT FUNCTIONAL SUPERVISOR
BEHZAD GOLEMOHAMMADI
STATE OF CALIFORNIA - DEPARTMENT OF TRANSPORTATION
Caltrans

LAST REVISION 00-00-00 | DATE PLOTTED => 28-JUL-2009 | TIME PLOTTED => 06:52

Dist	COUNTY	ROUTE	KILOMETER POST TOTAL PROJECT	SHEET No.	TOTAL SHEETS
04	SF	80	12.7/13.2	480	806

Caltrans Metric

6/25/08
REGISTERED ELECTRICAL ENGINEER

6-23-08
PLANS APPROVAL DATE

REGISTERED PROFESSIONAL ENGINEER
FADI WALIEDDINE
No. 11465
Exp. 12/31/09
ELECTRICAL
STATE OF CALIFORNIA

THE STATE OF CALIFORNIA OR ITS OFFICERS OR AGENTS SHALL NOT BE RESPONSIBLE FOR THE ACCURACY OR COMPLETENESS OF ELECTRONIC COPIES OF THIS PLAN SHEET.

PB AMERICAS, Inc.
A Parsons Brinckerhoff Company
303 Second St., Suite 700N
San Francisco, CA 94107-1317

Cable/Ckt #: 2121 — Reference: E-43
Function: 480 V Power — Conductor Type: 1-3/C + Gnd, #1/0, 600 V, EPR insulation
From: (E) 480 V LVCC-B Cubicle #11B — To: (E) Manhole-25
Remarks: Splice cable to (E) cable inside MH. The same circuit number installed on previous contract.
Description Of Changes:

Route	Conduit No.	Route	Conduit No.	Route	Conduit No.	Route	Conduit No.
1	0135	2	MH-5	3	0175	4	MH-7
5	0222	6	MH-10	7	0319	8	MH-13
9	0369	10	*0369	11	MH-16	12	0419
13	MH-19	14	0469	15	MH-22	16	*0519
17	0519	18	MH-25				

Cable/Ckt #: 2123 — Reference: E-43
Function: 480 V Feeder — Conductor Type: 1-3/C + Gnd, #1/0, 600 V, EPR insulation
From: (E) 480 V LVCC-B Cubicle #2B — To: (E) Manhole-25
Remarks: Splice cable to (E) cable inside MH. The same circuit number installed on previous contract. (For UP-210)
Description Of Changes:

Route	Conduit No.	Route	Conduit No.	Route	Conduit No.	Route	Conduit No.
1	0135	2	MH-5	3	0157	4	MH-7
5	0216	6	MH-10	7	0313	8	MH-13
9	0363	10	*0363	11	MH-16	12	0413
13	MH-19	14	0463	15	MH-22	16	*0513
17	0513	18	MH-25				

Cable/Ckt #: 2123-2 — Reference: E-43
Function: 208/120 V Feeder — Conductor Type: 1-3/C + Gnd, #2, 600 V, EPR insulation
From: (E) 480 V LVCC-B Cubicle #3A — To: (E) Manhole-25
Remarks: Splice cable to (E) cable inside MH. The same circuit number installed on previous contract. (For UP-210-1A)
Description Of Changes:

Route	Conduit No.	Route	Conduit No.	Route	Conduit No.	Route	Conduit No.
1	080	2	T31	3	T30	4	600 V PB
5	*0071	6	0071	7	MH-7	8	0216
9	MH-10	10	0313	11	MH-13	12	0363
13	*0363	14	MH-16	15	0413	16	MH-19
17	0463	18	MH-22	19	*0513	20	0513
21	MH-25						

Cable/Ckt #: 2123-3 — Reference: E-43
Function: 208/120 V Feeder — Conductor Type: 1-3/C + Gnd, #2, 600 V, EPR insulation
From: (E) 480 V LVCC-B Cubicle #3B — To: (E) Manhole-25
Remarks: Splice cable to (E) cable inside MH. The same circuit number installed on previous contract. (For UP-210-1B)
Description Of Changes:

Route	Conduit No.	Route	Conduit No.	Route	Conduit No.	Route	Conduit No.
1	081	2	T21	3	T20	4	600 V PB
5	*0071	6	0071	7	MH-7	8	0216
9	MH-10	10	0313	11	MH-13	12	0363
13	*0363	14	MH-16	15	0413	16	MH-19
17	0463	18	MH-22	19	*0513	20	0513
21	MH-25						

5

~~Cable/Ckt #: 2125 — Reference: E-43~~
~~Function: 480 V Power — Conductor Type: 3 + 1 Gnd, 250 kcmil, #1/0, 600 V, RHH/RHW insulation~~
~~From: (E) 480 V LVCC-B Cubicle # 7B — To: (E) Manhole-25~~
~~Remarks: Splice cable to (E) cable inside MH. The same circuit number installed on previous contract.~~
~~Description Of Changes:~~

Route	Conduit No.	Route	Conduit No.	Route	Conduit No.	Route	Conduit No.
1	0136	2	MH-5	3	0156	4	MH-7
5	0221	6	MH-10	7	0319	8	MH-13
9	0369	10	*0369	11	MH-16	12	0419
13	MH-19	14	0469	15	MH-22	16	0519
17	MH-25	18	*0519				

CABLE AND CIRCUIT SCHEDULE

5 **REVISED PER ADDENDUM No. 5 DATED JULY 30, 2009**

E-361

REVISED BY	DATE REVISED

CARMELO RIVERA — ELLERY LUCAS
CALCULATED-DESIGNED BY — CHECKED BY
CONSULTANT FUNCTIONAL SUPERVISOR — BEHZAD GOLEMOHAMMADI

STATE OF CALIFORNIA - DEPARTMENT OF TRANSPORTATION
Caltrans

LAST REVISION 00-00-00 — DATE PLOTTED => 28-JUL-2009 — TIME PLOTTED => 06:52

Dist	COUNTY	ROUTE	KILOMETER POST TOTAL PROJECT	SHEET No.	TOTAL SHEETS
04	SF	80	12.7/13.2	481	806

Caltrans Metric

6/25/08
REGISTERED ELECTRICAL ENGINEER

6-23-08
PLANS APPROVAL DATE

REGISTERED PROFESSIONAL ENGINEER
FADI WALIEDDINE
No. 11465
Exp. 12/31/09
ELECTRICAL
STATE OF CALIFORNIA

THE STATE OF CALIFORNIA OR ITS OFFICERS OR AGENTS SHALL NOT BE RESPONSIBLE FOR THE ACCURACY OR COMPLETENESS OF ELECTRONIC COPIES OF THIS PLAN SHEET.

PB AMERICAS, Inc.
A Parsons Brinckerhoff Company
303 Second St., Suite 700N
San Francisco, CA 94107-1317

Cable/Ckt #: 2142 — Reference: E-171, E-142
Function: Low Level Signal — Conductor Type: 1 - 2 pair, shielded #18 with IS/OA, 600 V, PVC jacket
From: Remote Terminal Unit RTU #9E — To: Call Box CB-240B
Remarks:
Description Of Changes:

Route	Conduit No.	Route	Conduit No.	Route	Conduit No.	Route	Conduit No.
1	RTU #9E	2	5072	3	PB-2B	4	5955
5	TC Vault 3E	6	2T43E	7	5944	8	TC Vault #2E
9	2T42E	10	5964	11	2504	12	CB-240

~~Cable/Ckt #: 2143 — Reference: E-171, E-142~~
~~Function: Low Level Signal — Conductor Type: 1 - 2 pair, shielded #18 with IS/OA, 600 V, PVC jacket~~
~~From: Remote Terminal Unit RTU #9E — To: Call Box CB-239A~~
~~Remarks:~~
~~Description Of Changes:~~

5

Route	Conduit No.	Route	Conduit No.	Route	Conduit No.	Route	Conduit No.
1	RTU #9E	2	5072	3	PB-2B	4	TC Vault 3E
5	2T43E	6	5944	7	TC Vault #2E	8	2T42E
9	5922A	10	PB-2E	11	5922	12	TC Vault #1E
13	2T41E	14	5925	15	CB-239A		

Cable/Ckt #: 2144 — Reference: E-171, E-142
Function: Low Level Signal — Conductor Type: 1 - 2 pair, shielded #18 with IS/OA, 600 V, PVC jacket
From: Remote Terminal Unit RTU #9E — To: Call Box CB-241B
Remarks:
Description Of Changes:

Route	Conduit No.	Route	Conduit No.	Route	Conduit No.	Route	Conduit No.
1	RTU #9E	2	5072	3	PB-2B	4	5955
5	TC Vault 3E	6	2T43E	7	5970	8	2507
9	2508	10	2509	11	2537	12	CB-241B

~~Cable/Ckt #: 2170 — Reference: E-171, E-142~~
~~Function: Low Level Signal — Conductor Type: 1 - 2 pair, shielded #18 with IS/OA, 600 V, PVC jacket~~
~~From: Remote Terminal Unit RTU #9E — To: Call Box CB-239B~~
~~Remarks:~~
~~Description Of Changes:~~

5

Route	Conduit No.	Route	Conduit No.	Route	Conduit No.	Route	Conduit No.
1	RTU #9E	2	5072	3	PB-2B	4	5955
5	TC Vault 3E	6	2T43E	7	5944	8	TC Vault #2E
9	2T42E	10	5944	11	TC Vault #1E	12	2T41E
13	5925	14	2100	15	5969	16	2500
17	CB-239B						

Cable/Ckt #: 2172 — Reference: E-171
Function: Low Level Signal — Conductor Type: 1 - 2 pair, shielded #18 with IS/OA, 600 V, PVC jacket
From: Call Box CB-241B — To: Call Box CB-241A
Remarks:
Description Of Changes:

Route	Conduit No.	Route	Conduit No.	Route	Conduit No.	Route	Conduit No.
1	CB-241B	2	2537	3	5968	4	2108
5	CB-241A						

Cable/Ckt #: 2254-1 — Reference: E-142
Function: 120 V DI — Conductor Type: 1-3/C #16, 600 V, EPR insulation
From: Remote Terminal Unit RTU #9E — To: Controller Cabinet TOS-01EA
Remarks:
Description Of Changes:

Route	Conduit No.	Route	Conduit No.	Route	Conduit No.	Route	Conduit No.
1	78 mm Nipple	2	Wireway #3E	3	5950	4	E. Vault #3E
5	2T23E	6	5942	7	E. Vault #2E	8	2T22E
9	5901A	10	PB-2A	11	5901	12	E. Vault #1E
13	5918	14	Wireway #1E	15	78 mm Nipple	16	TOS-01EA

Cable/Ckt #: 2254-2 — Reference: E-142
Function: 120 V DI — Conductor Type: 1-3/C #16, 600 V, EPR insulation
From: Remote Terminal Unit RTU #9E — To: Controller Cabinet TOS-02EA
Remarks:
Description Of Changes:

Route	Conduit No.	Route	Conduit No.	Route	Conduit No.	Route	Conduit No.
1	78 mm Nipple	2	Wireway #3E	3	5950	4	2T23E
5	E. Vault #3E	6	5942	7	E. Vault #2E	8	2T22E
9	5931	10	Wireway #2E	11	78 mm Nipple	12	TOS-02EA

5 **REVISED PER ADDENDUM No. 5 DATED JULY 30, 2009**

CABLE AND CIRCUIT SCHEDULE

E-362

REVISED BY | DATE REVISED
CARMELO RIVERA | ELLERY LUCAS
CALCULATED-DESIGNED BY | CHECKED BY
CONSULTANT FUNCTIONAL SUPERVISOR
BEHZAD GOLEMOHAMMADI

STATE OF CALIFORNIA - DEPARTMENT OF TRANSPORTATION
Caltrans

LAST REVISION 00-00-00 | DATE PLOTTED => 28-JUL-2009 | TIME PLOTTED => 06:52

Dist	COUNTY	ROUTE	KILOMETER POST TOTAL PROJECT	SHEET No.	TOTAL SHEETS
04	SF	80	12.7/13.2	483	806

Caltrans Metric

6/25/08
REGISTERED ELECTRICAL ENGINEER

6-23-08
PLANS APPROVAL DATE

REGISTERED PROFESSIONAL ENGINEER FADI WALIEDDINE No. 11465 Exp. 12/31/09 ELECTRICAL STATE OF CALIFORNIA

THE STATE OF CALIFORNIA OR ITS OFFICERS OR AGENTS SHALL NOT BE RESPONSIBLE FOR THE ACCURACY OR COMPLETENESS OF ELECTRONIC COPIES OF THIS PLAN SHEET.

PB AMERICAS, Inc.
A Parsons Brinckerhoff Company
303 Second St., Suite 700N
San Francisco, CA 94107-1317

5

~~Cable/Ckt #: 2474-3 | Reference: E-138, E-143~~
~~Function: Scada Data Com | Conductor Type: 50 pair #18, shielded pairs, IS/OS shield 600 V, XLPE insul., PVC jacket~~
~~From: Scada Com. Terminal Box COM-2E | To: Scada Com. Terminal Box COM-3E~~
~~Remarks:~~
~~Description Of Changes:~~

Route	Conduit No.	Route	Conduit No.	Route	Conduit No.	Route	Conduit No.
1	5025	2	2T42E	3	E. Vault #2E	4	5944
5	E. Vault #3E	6	2T43E	7	5580		

Cable/Ckt #: 2474-3A | Reference: E-138, E-142, E-143
Function: Scada Data Com | Conductor Type: 1 - 6 pair, shielded #18 with overall shield , 600 V, PVC jacket
From: Remote Terminal Unit RTU #9E | To: Scada Com. Terminal Box COM-3E
Remarks:
Description Of Changes:

Route	Conduit No.	Route	Conduit No.	Route	Conduit No.	Route	Conduit No.
1	5066						

Cable/Ckt #: 2474-3B | Reference: E-138, E-142, E-143
Function: Scada Data Com | Conductor Type: 1 - 6 pair, shielded #18 with overall shield , 600 V, PVC jacket
From: Remote Terminal Unit RTU #9E | To: Scada Com. Terminal Box COM-3E
Remarks:
Description Of Changes:

Route	Conduit No.	Route	Conduit No.	Route	Conduit No.	Route	Conduit No.
1	5066						

Cable/Ckt #: 2475-1 | Reference: E-153
Function: TOS Data Com | Conductor Type: 72 Fiber, single mode fiber optic riser cable
From: (E) Splice Cabinet #TOS-Y03S | To: Controller Cabinet #TOS-01EW
Remarks:
Description Of Changes:

Route	Conduit No.	Route	Conduit No.	Route	Conduit No.	Route	Conduit No.
1	TOS-Y03	2	202	3	T40	4	TOS/COM PB
5	0090	6	MH-4	7	0180	8	MH-9
9	5912	10	TC Vault #1E	11	2T41E	12	5906

Cable/Ckt #: 2475-1A | Reference: E-153
Function: TOS Data Com | Conductor Type: 12 Fiber, single mode fiber optic cable
From: Splice Cabinet TOS-03ES | To: Controller Cabinet #TOS-03EA
Remarks:
Description Of Changes:

Route	Conduit No.	Route	Conduit No.	Route	Conduit No.	Route	Conduit No.
1	5065						

Cable/Ckt #: 2475-1B | Reference: E-153
Function: TOS Data Com | Conductor Type: 12 Fiber, single mode fiber optic cable
From: Splice Cabinet #TOS-02ES | To: Controller Cabinet #TOS-02EA
Remarks:
Description Of Changes:

Route	Conduit No.	Route	Conduit No.	Route	Conduit No.	Route	Conduit No.
1	5561						

Cable/Ckt #: 2475-1C | Reference: E-153
Function: TOS Data Com | Conductor Type: 12 Fiber, single mode fiber optic cable
From: Controller Cabinet TOS-01EW | To: Controller Cabinet #TOS-01EA
Remarks:
Description Of Changes:

Route	Conduit No.	Route	Conduit No.	Route	Conduit No.	Route	Conduit No.
1	5007						

5

~~Cable/Ckt #: 2475-2 | Reference: E-153~~
~~Function: TOS Data Com | Conductor Type: 72 Fiber, single mode fiber optic riser cable~~
~~From: Controller Cabinet TOS-01EW | To: Splice Cabinet TOS-02ES~~
~~Remarks:~~
~~Description Of Changes:~~

Route	Conduit No.	Route	Conduit No.	Route	Conduit No.	Route	Conduit No.
1	TOS-01EW	2	5906	3	2T41E	4	TC Vault #1E
5	5923	6	PB-2E	7	5923A	8	TC Vault #2E
9	2T42E	10	5936	11	5564	12	TOS-02ES

5 **REVISED PER ADDENDUM No. 5 DATED JULY 30, 2009**

CABLE AND CIRCUIT SCHEDULE

E-364

REVISED BY	DATE REVISED

CARMELO RIVERA | ELLERY LUCAS
CALCULATED-DESIGNED BY | CHECKED BY
CONSULTANT FUNCTIONAL SUPERVISOR
BEHZAD GOLEMOHAMMADI

STATE OF CALIFORNIA - DEPARTMENT OF TRANSPORTATION
Caltrans

LAST REVISION 00-00-00 | DATE PLOTTED => 28-JUL-2009 | TIME PLOTTED => 06:52

Dist	COUNTY	ROUTE	KILOMETER POST TOTAL PROJECT	SHEET No.	TOTAL SHEETS
04	SF	80	12.7/13.2	484	806

Caltrans Metric

6/25/08
REGISTERED ELECTRICAL ENGINEER

6-23-08
PLANS APPROVAL DATE

REGISTERED PROFESSIONAL ENGINEER
FADI WALIEDDINE
No. 11465
Exp. 12/31/09
ELECTRICAL
STATE OF CALIFORNIA

THE STATE OF CALIFORNIA OR ITS OFFICERS OR AGENTS SHALL NOT BE RESPONSIBLE FOR THE ACCURACY OR COMPLETENESS OF ELECTRONIC COPIES OF THIS PLAN SHEET.

PB AMERICAS, Inc.
A Parsons Brinckerhoff Company
303 Second St., Suite 700N
San Francisco, CA 94107-1317

5

Cable/Ckt #: 2475-3
Reference: E-153
Function: TOS Data Com
Conductor Type: 72 Fiber, single mode fiber optic riser cable
From: Splice Cabinet TOS-02ES
To: Splice Cabinet TOS-03ES
Remarks:
Description Of Changes:

Route	Conduit No.	Route	Conduit No.	Route	Conduit No.	Route	Conduit No.
1	TOS-02ES	2	5564	3	5936	4	2T42E
5	TC Vault #2E	6	5945	7	TC Vault #3E	8	2T43E
9	5956	10	5071	11	TOS-03ES		

Cable/Ckt #: 2475-4
Reference: E-153
Function: TOS Data Com
Conductor Type: 72 Fiber, single mode fiber optic riser cable
From: Splice Cabinet TOS-03ES
To: Fiber Splice Closure (FSC)
Remarks: Splice cable to (E) cable inside MH. The same circuit number installed on previous contract.
Description Of Changes:

Route	Conduit No.	Route	Conduit No.	Route	Conduit No.	Route	Conduit No.
1	TOS-03ES	2	5071	3	5956	4	2T43E
5	TC Vault 3E	6	5945	7	TC Vault #2E	8	2T42E
9	5923A	10	PB-2E	11	5923	12	TC Vault #1E
13	2T41E	14	5912	15	MH-9	16	0260
17	MH-12	18	0510	19	MH-15	20	0360
21	MH-18	22	0410	23	MH-21	24	0460
25	MH-24	26	0510	27	MH-27		

Cable/Ckt #: 2900-101A
Reference: E-165, E-166
Function: Low Level Signal
Conductor Type: 4 pair #22, shielded pairs, FEP insulation (Type SSC)
From: Sensor 10-1
To: Strong Motion Recorder #1
Remarks:
Description Of Changes:

Route	Conduit No.	Route	Conduit No.	Route	Conduit No.	Route	Conduit No.
1	9204	2	9234	3	9233	4	9232
5	9231	6	9230	7	TC Vault 3E	8	2T43E
9	9235	10	TC Vault #2E	11	2T42E	12	9236A
13	PB-2E	15	TC Vault #1E	15	9236	16	9217
17	PB-2B	18	9218	19	Recorder #1		

Cable/Ckt #: 2900-101B
Reference: E-165, E-166
Function: Low Level Signal
Conductor Type: 4 pair #22, shielded pairs, FEP insulation (Type SSC)
From: Sensor 10-1
To: Strong Motion Recorder #1
Remarks:
Description Of Changes:

Route	Conduit No.	Route	Conduit No.	Route	Conduit No.	Route	Conduit No.
1	9204	2	9234	3	9233	4	9232
5	9231	6	9230	7	TC Vault 3E	8	2T43E
9	9235	10	TC Vault #2E	11	2T42E	12	9236A
13	PB-2E	15	9236	15	TC Vault #1E	16	9217
17	PB-2B	18	9218	19	Recorder #1		

Cable/Ckt #: 2900-111A
Reference: E-165, E-166
Function: Low Level Signal
Conductor Type: 4 pair #22, shielded pairs, FEP insulation (Type SSC)
From: Sensor 11-1
To: Strong Motion Recorder #1
Remarks:
Description Of Changes:

Route	Conduit No.	Route	Conduit No.	Route	Conduit No.	Route	Conduit No.
1	9105	2	9013	3	9012	4	9011
5	9010	6	9014	7	TC Vault 3W	8	1T43W
9	9015	10	TC Vault #2W	11	1T42W	12	9016
13	PB-2A	14	9017	15	TC Vault #1W	16	1T41W
17	9101	18	MH-9	19	9201	20	TC Vault #1E
21	2T41E	22	9217	23	PB-2B	24	9218

CABLE AND CIRCUIT SCHEDULE

5 REVISED PER ADDENDUM No. 5 DATED JULY 30, 2009

E-365

REVISED BY	DATE REVISED
CARMELO RIVERA	ELLERY LUCAS
CALCULATED-DESIGNED BY	CHECKED BY
CONSULTANT FUNCTIONAL SUPERVISOR	
BEHZAD GOLEMOHAMMADI	

STATE OF CALIFORNIA - DEPARTMENT OF TRANSPORTATION
Caltrans

LAST REVISION 00-00-00
DATE PLOTTED => 28-JUL-2009
TIME PLOTTED => 06:52

Dist	COUNTY	ROUTE	KILOMETER POST TOTAL PROJECT	SHEET No.	TOTAL SHEETS
04	SF	80	12.7/13.2	487	806

Caltrans Metric

6/25/08
REGISTERED ELECTRICAL ENGINEER

6-23-08
PLANS APPROVAL DATE

REGISTERED PROFESSIONAL ENGINEER
FADI WALIEDDINE
No. 11465
Exp. 12/31/09
ELECTRICAL
STATE OF CALIFORNIA

THE STATE OF CALIFORNIA OR ITS OFFICERS OR AGENTS SHALL NOT BE RESPONSIBLE FOR THE ACCURACY OR COMPLETENESS OF ELECTRONIC COPIES OF THIS PLAN SHEET.

PB AMERICAS, Inc.
A Parsons Brinckerhoff Company
303 Second St., Suite 700N
San Francisco, CA 94107-1317

Cable/Ckt #: 2900-31A
Reference: E-165, E-166
Function: Low Level Signal
Conductor Type: 4 pair #22, shielded pairs, FEP insulation (Type SSC)
From: Sensor 3-1
To: Strong Motion Recorder #1
Remarks:
Description Of Changes:

Route	Conduit No.	Route	Conduit No.	Route	Conduit No.	Route	Conduit No.
1	9219	2	*9210	3	9210	4	PB-SMD
5	9100	6	TC Vault #1W	7	1T41W	8	9101
9	MH-9	10	9201	11	TC Vault #1E	12	2T41E
13	9217	14	PB-2B	15	9218	16	Recorder #1

Cable/Ckt #: 2900-31B
Reference: E-165, E-166
Function: Low Level Signal
Conductor Type: 4 pair #22, shielded pairs, FEP insulation (Type SSC)
From: Sensor 3-1
To: Strong Motion Recorder #1
Remarks:
Description Of Changes:

Route	Conduit No.	Route	Conduit No.	Route	Conduit No.	Route	Conduit No.
1	9219	2	*9210	3	9210	4	PB-SMD
5	9100	6	TC Vault #1W	7	1T41W	8	9101
9	MH-9	10	9201	11	TC Vault #1E	12	2T41E
13	9217	14	PB-2B	15	9218	16	Recorder #1

Cable/Ckt #: 2900-31C
Reference: E-165, E-166
Function: Low Level Signal
Conductor Type: 4 pair #22, shielded pairs, FEP insulation (Type SSC)
From: Sensor 3-1
To: Strong Motion Recorder #1
Remarks:
Description Of Changes:

Route	Conduit No.	Route	Conduit No.	Route	Conduit No.	Route	Conduit No.
1	9219	2	*9210	3	9210	4	PB-SMD
5	9100	6	TC Vault #1W	7	1T41W	8	9101
9	MH-9	10	9201	11	TC Vault #1E	12	2T41E
13	9217	14	PB-2B	15	9218	16	Recorder #1

5

Cable/Ckt #: 2900-41A
Reference: E-165, E-166
Function: Low Level Signal
Conductor Type: 4 pair #22, shielded pairs, FEP insulation (Type SSC)
From: Sensor 4-1
To: Strong Motion Recorder #1
Remarks:
Description Of Changes:

Route	Conduit No.	Route	Conduit No.	Route	Conduit No.	Route	Conduit No.
1	9214	2	PB-SMD	3	9100	4	TC Vault #1W
5	1T41W	6	9101	7	MH-9	8	9101
9	9201	10	TC Vault #1E	11	2T41E	12	9217
13	PB-2B	14	9218	15	Recorder #1		

5

Cable/Ckt #: 2900-41B
Reference: E-165, E-66
Function: Low Level Signal
Conductor Type: 4 pair #22, shielded pairs, FEP insulation (Type SSC)
From: Sensor 4-1
To: Strong Motion Recorder #1
Remarks:
Description Of Changes:

Route	Conduit No.	Route	Conduit No.	Route	Conduit No.	Route	Conduit No.
1	9214	2	PB-SMD	3	9100	4	TC Vault #1W
5	1T41W	6	9101	7	MH-9	8	9101
9	9201	10	TC Vault #1E	11	2T41E	12	9217
13	PB-2B	14	9218	15	Recorder #1		

Cable/Ckt #: 2900-51A
Reference: E-165, E-166
Function: Low Level Signal
Conductor Type: 4 pair #22, shielded pairs, FEP insulation (Type SSC)
From: Sensor 5-1
To: Strong Motion Recorder #1
Remarks:
Description Of Changes:

Route	Conduit No.	Route	Conduit No.	Route	Conduit No.	Route	Conduit No.
1	9213	2	PB-SMD	3	9100	4	TC Vault #1W
5	1T41W	6	9101	7	MH-9	8	9201
9	TC Vault #1E	10	2T41E	11	9217	12	PB-2B
13	9218	14	Recorder #1				

Cable/Ckt #: 2900-51B
Reference: E-165, E-166
Function: Low Level Signal
Conductor Type: 4 pair #22, shielded pairs, FEP insulation (Type SSC)
From: Sensor 5-1
To: Strong Motion Recorder #1
Remarks:
Description Of Changes:

Route	Conduit No.	Route	Conduit No.	Route	Conduit No.	Route	Conduit No.
1	9213	2	PB-SMD	3	9100	4	TC Vault #1W
5	1T41W	6	9101	7	MH-9	8	9201
9	TC Vault #1E	10	2T41E	11	9217	12	PB-2B
13	9218	14	Recorder #1				

5 **REVISED PER ADDENDUM No. 5 DATED JULY 30, 2009**

CABLE AND CIRCUIT SCHEDULE

E-368

REVISED BY | DATE REVISED
CARMELO RIVERA | ELLERY LUCAS
CALCULATED-DESIGNED BY | CHECKED BY
CONSULTANT FUNCTIONAL SUPERVISOR
BEHZAD GOLEMOHAMMADI
STATE OF CALIFORNIA - DEPARTMENT OF TRANSPORTATION
Caltrans

LAST REVISION 00-00-00 | DATE PLOTTED => 28-JUL-2009 | TIME PLOTTED => 06:53

Dist	COUNTY	ROUTE	KILOMETER POST TOTAL PROJECT	SHEET No.	TOTAL SHEETS
04	SF	80	12.7/13.2	489	806

Caltrans Metric

6/25/08
REGISTERED ELECTRICAL ENGINEER

6-23-08
PLANS APPROVAL DATE

REGISTERED PROFESSIONAL ENGINEER FADI WALIEDDINE No. 11465 Exp. 12/31/09 ELECTRICAL STATE OF CALIFORNIA

THE STATE OF CALIFORNIA OR ITS OFFICERS OR AGENTS SHALL NOT BE RESPONSIBLE FOR THE ACCURACY OR COMPLETENESS OF ELECTRONIC COPIES OF THIS PLAN SHEET.

PB AMERICAS, Inc.
A Parsons Brinckerhoff Company
303 Second St., Suite 700N
San Francisco, CA 94107-1317

Cable/Ckt #: 2900-91B
Reference: E-165, E-166
Function: Low Level Signal
Conductor Type: 4 pair #22, shielded pairs, FEP insulation (Type SSC)
From: Sensor 9-1
To: Strong Motion Recorder #1
Remarks:
Description Of Changes:

Route	Conduit No.	Route	Conduit No.	Route	Conduit No.	Route	Conduit No.
1	9205	2	9234	3	9233	4	9232
5	9231	6	9230	7	TC Vault 3E	8	2T43E
9	9235	10	TC Vault #2E	11	2T42E	12	9236A
13	PB-2E	14	9236	15	TC Vault #1E	16	2T41E
17	9217	18	PB-2B	19	9218	20	Recorder #1

Cable/Ckt #: 2900-91C
Reference: E-165, E-166
Function: Low Level Signal
Conductor Type: 4 pair #22, shielded pairs, FEP insulation (Type SSC)
From: Sensor 9-1
To: Strong Motion Recorder #1
Remarks:
Description Of Changes:

Route	Conduit No.	Route	Conduit No.	Route	Conduit No.	Route	Conduit No.
1	9205	2	9234	3	9233	4	9232
5	9231	6	9230	7	TC Vault 3E	8	2T43E
9	9235	10	TC Vault #2E	11	2T42E	12	9236A
13	PB-2E	14	9236	15	TC Vault #1E	16	2T41E
17	9217	18	PB-2B	19	9218	20	Recorder #1

Cable/Ckt #: 2910-1
Reference: E-142, E-166
Function: 120 V DI
Conductor Type: 1-3/C #16, 600 V, EPR insulation
From: Strong Motion Recorder #1
To: Remote Terminal Unit RTU #9E
Remarks:
Description Of Changes:

Route	Conduit No.	Route	Conduit No.	Route	Conduit No.	Route	Conduit No.
1	78 mm Nipple	2	Wireway #1E	3	5919	5	2T21E
5	E. Vault #1E	6	5902	7	PB-2A	8	5902A
9	E. Vault #2E	10	2T22E	11	5942	12	E. Vault #3E
13	2T23E	14	5951	15	Wireway #3E	16	78 mm Nipple
17	RTU #9E						

5

Cable/Ckt #: 2910-2
Reference: E-166, E-167
Function: 120 V DI
Conductor Type: 4 pair #24, overall shielded, 300 V, PE insulation (Type IC)
From: Strong Motion Recorder #1
To: 2910-2 Cable Splice MH-27
Remarks: Splice cable to (E) cable inside MH. The same circuit number installed on previous contract.
Description Of Changes:

Route	Conduit No.	Route	Conduit No.	Route	Conduit No.	Route	Conduit No.
1	9218	2	PB-2B	3	9217	4	TC Vault #1E
5	2T41E	6	9201	7	MH-9	8	0286
9	MH-12	10	0336	11	MH-15	12	0386
13	*0386	14	MH-18	15	0436	16	MH-21
17	0486	18	MH-24	19	0536	20	MH-27

Cable/Ckt #: 2910-3
Reference: E-166, E-167
Function: Low Level Signal
Conductor Type: 4 pair #22, shielded pairs, FEP insulation (Type SSC)
From: Strong Motion Recorder #1
To: 2910-3 Cable Splice MH-27
Remarks: Splice cable to (E) cable inside MH. The same circuit number installed on previous contract.
Description Of Changes:

Route	Conduit No.	Route	Conduit No.	Route	Conduit No.	Route	Conduit No.
1	9218	2	PB-2B	3	9217	4	TC Vault #1E
5	2T41E	6	9201	7	MH-9	8	0286
9	MH-12	10	0336	11	MH-15	12	0386
13	*0386	14	MH-18	15	0436	16	MH-21
17	0486	18	MH-24	19	0536	20	MH-27

Cable/Ckt #: 2910-4
Reference: E-166
Function: Low Level Signal
Conductor Type: 4 pair #22, shielded pairs, 300 V, PE insulation (Type ISDN)
From: Strong Motion Recorder #1
To: Telephone Terminal Box TEL-1E
Remarks:
Description Of Changes:

Route	Conduit No.	Route	Conduit No.	Route	Conduit No.	Route	Conduit No.
1	9216						

CABLE AND CIRCUIT SCHEDULE

5 REVISED PER ADDENDUM No. 5 DATED JULY 30, 2009

E-370

REVISED BY | DATE REVISED
CARMELO RIVERA | ELLERY LUCAS
CALCULATED-DESIGNED BY | CHECKED BY
CONSULTANT FUNCTIONAL SUPERVISOR
BEHZAD GOLEMOHAMMADI
STATE OF CALIFORNIA - DEPARTMENT OF TRANSPORTATION
Caltrans

LAST REVISION 00-00-00 | DATE PLOTTED => 28-JUL-2009 | TIME PLOTTED => 06:53

Dist	COUNTY	ROUTE	KILOMETER POST TOTAL PROJECT	SHEET No.	TOTAL SHEETS
04	SF	80	12.7/13.2	490	806

Caltrans Metric

6/25/08
REGISTERED ELECTRICAL ENGINEER

6-23-08
PLANS APPROVAL DATE

REGISTERED PROFESSIONAL ENGINEER
FADI WALIEDDINE
No. 11465
Exp. 12/31/09
ELECTRICAL
STATE OF CALIFORNIA

THE STATE OF CALIFORNIA OR ITS OFFICERS OR AGENTS SHALL NOT BE RESPONSIBLE FOR THE ACCURACY OR COMPLETENESS OF ELECTRONIC COPIES OF THIS PLAN SHEET.

PB AMERICAS, Inc.
A Parsons Brinckerhoff Company
303 Second St., Suite 700N
San Francisco, CA 94107-1317

Cable/Ckt #: A-1005 | Reference: E-54
Function: 480 V Lighting | Conductor Type: 2-1/C #10, 600 V, RHH/RHW insulation
From: Roadway Lighting Fixtures | To: Barrier pull Boxes PB-LTG
Remarks: For Light Poles 1021-1 to 1021-3 and 1021-13,14,15 and 16.
Description Of Changes:

Route	Conduit No.	Route	Conduit No.	Route	Conduit No.	Route	Conduit No.
1	FIELD						

~~Cable/Ckt #: A-1005-1 | Reference: E-41, E-54~~
~~Function: 480 V Lighting | Conductor Type: 1-3/C + Gnd, #8, 600 V, EPR insulation~~
~~From: (E) 480 V LVCC-A cubicle #21 | To: PB-LTG (Platform #1W)~~
~~Remarks:~~
~~Description Of Changes:~~

Route	Conduit No.	Route	Conduit No.	Route	Conduit No.	Route	Conduit No.
1	041	2	T20	3	600 V PB	4	0124
5	MH-5	6	0168	7	MH-7	8	0226
9	MH-30	10	4211	11	E. Vault #1W	12	1T41W
13	4018						

5

Cable/Ckt #: A-1005-2 | Reference: E-54
Function: 480 V Lighting | Conductor Type: 3 + 1 Gnd, #8, #10, 600 V, RHH/RHW insulation
From: PB-LTG (Platform #1W) | To: Barrier pull boxes PB-LTG
Remarks: For LightingPoles 1021-7, -8, 9,-10, -11, -12.
Description Of Changes:

Route	Conduit No.	Route	Conduit No.	Route	Conduit No.	Route	Conduit No.
1	PB-LTG	2	1705	3	1704	4	1703
5	1702	6	1701	7	1776	8	PB-LTG

Cable/Ckt #: A-1006 | Reference: E-55, E-56
Function: 480 V Lighting | Conductor Type: 2-1/C #10, 600 V, RHH/RHW insulation
From: Roadway Lighting Fixtures | To: Barrier pull Boxes PB-LTG
Remarks: For Light Poles 1022-1 to 1022-10, 1023-1 to 1023-3,1024-1 to 1024-3
Description Of Changes:

Route	Conduit No.	Route	Conduit No.	Route	Conduit No.	Route	Conduit No.
1	FIELD						

~~Cable/Ckt #: A-1006-1 | Reference: E-41, E-55~~
~~Function: 480 V Lighting | Conductor Type: 1-3/C + Gnd, #8, 600 V, EPR insulation~~
~~From: (E) 480 V LVCC-A cubicle #26 | To: PB-2J (Loc. Electrical Vault #2W)~~
~~Remarks: Splice cables A-1006-2 and A-1006-3. (Multi-conductor to single conductor)~~
~~Description Of Changes:~~

Route	Conduit No.	Route	Conduit No.	Route	Conduit No.	Route	Conduit No.
1	041	2	T20	3	600 V PB	4	0124
5	MH-5	6	0168	7	MH-7	8	0226
9	MH-30	10	4211	11	E. Vault #1W	12	1T41W
13	4901	14	PB-2E	15	4928	16	E. Vault #2W
17	1T22W	18	4914	19	PB-2J		

5

Cable/Ckt #: A-1006-2 | Reference: E-55
Function: 480 V Lighting | Conductor Type: 1-3/C + Gnd, #8, 600 V, EPR insulation
From: PB-2J (Loc. Electrical Vault #2W) | To: PB-LTG (Platform #1W)
Remarks: Splice cables A-1006-1 and A-1006-3. (Multi-conductor to single conductor.
Description Of Changes:

Route	Conduit No.	Route	Conduit No.	Route	Conduit No.	Route	Conduit No.
1	PB-2J	2	4914	3	1T22W	4	E. Vault #2W
5	4928	6	PB-2E	7	4901	8	E.Vault #1W
9	1T21W	10	4018	11	PB-LTG		

Cable/Ckt #: A-1006-2A | Reference: E-55
Function: 480 V Lighting | Conductor Type: 3 + 1 Gnd, #8, #10, 600 V, RHH/RHW insulation
From: PB-LTG (Platform #1W) | To: PB-LTG
Remarks: ForLighting Poles 1022-1, -2, -3.
Description Of Changes:

Route	Conduit No.	Route	Conduit No.	Route	Conduit No.	Route	Conduit No.
1	1707	2	1706	3	1708		

5 **REVISED PER ADDENDUM No. 5 DATED JULY 30, 2009**

CABLE AND CIRCUIT SCHEDULE

E-371

REVISED BY | DATE REVISED
CARMELO RIVERA | ELLERY LUCAS
CALCULATED-DESIGNED BY | CHECKED BY
CONSULTANT FUNCTIONAL SUPERVISOR
BEHZAD GOLEMOHAMMADI
STATE OF CALIFORNIA - DEPARTMENT OF TRANSPORTATION
Caltrans

LAST REVISION 00-00-00 | DATE PLOTTED => 28-JUL-2009 | TIME PLOTTED => 06:53

Dist	COUNTY	ROUTE	KILOMETER POST TOTAL PROJECT	SHEET No.	TOTAL SHEETS
04	SF	80	12.7/13.2	491	806

6/25/08
REGISTERED ELECTRICAL ENGINEER

6-23-08
PLANS APPROVAL DATE

REGISTERED PROFESSIONAL ENGINEER
FADI WALIEDDINE
No. 11465
Exp. 12/31/09
ELECTRICAL
STATE OF CALIFORNIA

THE STATE OF CALIFORNIA OR ITS OFFICERS OR AGENTS SHALL NOT BE RESPONSIBLE FOR THE ACCURACY OR COMPLETENESS OF ELECTRONIC COPIES OF THIS PLAN SHEET.

PB AMERICAS, Inc.
A Parsons Brinckerhoff Company
303 Second St., Suite 700N
San Francisco, CA 94107-1317

Cable/Ckt #: A-1006-3 | Reference: E-55
Function: 480 V Lighting | Conductor Type: 1-3/C + Gnd, #8, 600 V, EPR insulation
From: PB-2J (Loc. Electrical Vault #2W) | To: PB-LTG (Platfrom #2W)
Remarks: Splice cables A-1006-1 and A-1006-2 inside PB-2J. (Multi-conductor to single conductor)
Description Of Changes:

Route	Conduit No.	Route	Conduit No.	Route	Conduit No.	Route	Conduit No.
1	PB-2J	2	4914	3	1T22W	4	4958
5	PB-LTG						

Cable/Ckt #: A-1006-3A | Reference: E-55
Function: 480 V Lighting | Conductor Type: 3 + 1 Gnd, #8, #10, 600 V, RHH/RHW insulation
From: PB-LTG (Platfrom #2W) | To: PB-LTG
Remarks: For Lighting Poles 1022-4,-5,-6,-7, -8,-9,-10 & 1023-1, -2,-3, 1024-1,-2 & -3.
Description Of Changes:

Route	Conduit No.	Route	Conduit No.	Route	Conduit No.	Route	Conduit No.
1	PB-LTG	2	1718	3	1717	4	1716
5	1715	6	1714	7	1713	8	1712
9	1719	10	1720	11	1721	12	1722
13	1723	14	1724	15	1725	16	1727

Cable/Ckt #: A-1007-1 | Reference: E-41, E-77
Function: 480 V Lighting | Conductor Type: 1-3/C + Gnd, #4, 600 V, EPR insulation
From: (E) 480 V LVCC-A cubicle #22 | To: PB-LTG (Bent W5L)
Remarks:
Description Of Changes:

Route	Conduit No.	Route	Conduit No.	Route	Conduit No.	Route	Conduit No.
1	041	2	T20	3	600 V PB	4	0124
5	MH-5	6	0168	7	MH-7	8	0226
9	MH-30	10	4212	11	E. Vault #1W	12	1T21W
13	4901	14	PB-2E	15	4928	16	E. Vault #2W
17	1T22W	18	4960	19	PB-LTG		

5

Cable/Ckt #: A-1007-2 | Reference: E-77
Function: 480 V Lighting | Conductor Type: 3 + 1 Gnd, #6, #8, 600 V, RHH/RHW insulation
From: PB-LTG (Bent W5L) | To: Pull Box PB-LTG
Remarks:
Description Of Changes:

Route	Conduit No.	Route	Conduit No.	Route	Conduit No.	Route	Conduit No.
1	1324	2	1323	3	1322	4	1326
5	1327	6	1328	7	1329	8	1331
9	1332	10	1333	11	1334		

Cable/Ckt #: A-1008-1 | Reference: E-41, E-77
Function: 480 V Lighting | Conductor Type: 1-3/C + Gnd, #6, 600 V, EPR insulation
From: (E) 480 V LVCC-A cubicle #23 | To: PB-LTG (Bent W4L)
Remarks:
Description Of Changes:

Route	Conduit No.	Route	Conduit No.	Route	Conduit No.	Route	Conduit No.
1	041	2	T20	3	600 V PB	4	0124
5	MH-5	6	0168	7	MH-7	8	0226
9	MH-30	10	4213	11	E. Vault #1W	12	1T21W
13	4901	14	PB-2E	15	4929	16	E. Vault #2W
17	1T22W	18	4956	19	E. Vault #3W	20	1T23W
21	4970	22	PB-LTG				

Cable/Ckt #: A-1008-2 | Reference: E-77
Function: 480 V Lighting | Conductor Type: 3 + 1 Gnd, #8, #10, 600 V, RHH/RHW insulation
From: PB-LTG (Bent W4L) | To: Pull Box PB-LTG
Remarks:
Description Of Changes:

Route	Conduit No.	Route	Conduit No.	Route	Conduit No.	Route	Conduit No.
1	1333	2	1334	3	1335	4	1336
5	1338	6	1339	7	1340	8	1341
9	1342	10	1344	11	1345	12	1346

5 REVISED PER ADDENDUM No. 5 DATED JULY 30, 2009

CABLE AND CIRCUIT SCHEDULE

E-372

REVISED BY | DATE REVISED
CARMELO RIVERA | ELLERY LUCAS
CALCULATED-DESIGNED BY | CHECKED BY
CONSULTANT FUNCTIONAL SUPERVISOR
BEHZAD GOLEMOHAMMADI
STATE OF CALIFORNIA - DEPARTMENT OF TRANSPORTATION
Caltrans

LAST REVISION 00-00-00 | DATE PLOTTED => 28-JUL-2009 | TIME PLOTTED => 06:53

Dist	COUNTY	ROUTE	KILOMETER POST TOTAL PROJECT	SHEET No.	TOTAL SHEETS
04	SF	80	12.7/13.2	494	806

Caltrans Metric

6/25/08
REGISTERED ELECTRICAL ENGINEER

6-23-08
PLANS APPROVAL DATE

REGISTERED PROFESSIONAL ENGINEER
FADI WALIEDDINE
No. 11465
Exp. 12/31/09
ELECTRICAL
STATE OF CALIFORNIA

THE STATE OF CALIFORNIA OR ITS OFFICERS OR AGENTS SHALL NOT BE RESPONSIBLE FOR THE ACCURACY OR COMPLETENESS OF ELECTRONIC COPIES OF THIS PLAN SHEET.

PB AMERICAS, Inc.
A Parsons Brinckerhoff Company
303 Second St., Suite 700N
San Francisco, CA 94107-1317

Cable/Ckt #: A-2008-1 | Reference: E-44, E-125
Function: 480 V Lighting | Conductor Type: 1-3/C + Gnd, #4, 600 V, EPR insulation
From: (E) 480 V LVCC-B Cubicle #23 | To: PB-LTG (Bent W4R)
Remarks:
Description Of Changes:

Route	Conduit No.	Route	Conduit No.	Route	Conduit No.	Route	Conduit No.
1	094	2	T31	3	T30	4	600 V PB
5	0111	6	MH-5	7	0151	8	MH-7
9	0201	10	MH-29	11	5908	12	E. Vault #1E
13	2T21E	14	5901	15	PB-2A	16	5901A
17	E. Vault #2E	18	2T22E	19	5941	20	E. Vault #3E
21	2T23E	22	5948	23	PB-LTG		

Cable/Ckt #: A-2008-2 | Reference: E-125
Function: 480 V Lighting | Conductor Type: 3 + 1 Gnd, #6, #8, 600 V, RHH/RHW insulation
From: Electrical Vault #3E | To: Barrier pull boxes PB-LTG
Remarks:
Description Of Changes:

Route	Conduit No.	Route	Conduit No.	Route	Conduit No.	Route	Conduit No.
1	2742	2	2743	3	2744	4	2745
5	2746	6	2747	7	2748	8	2749
9	2750	10	2751	11	2752	12	2753
13	2754	14	2755	15	2756	16	7109
17	7300	18	7301	19	7302		

~~Cable/Ckt #: A-2009-1 | Reference: E-44, E-125~~
~~Function: 480 V Lighting | Conductor Type: 1-3/C + Gnd, #6, 600 V, EPR insulation~~
~~From: (E) 480 V LVCC-B Cubicle #18 | To: PB-LTG (Bent W5R)~~
~~Remarks:~~
~~Description Of Changes:~~

Route	Conduit No.	Route	Conduit No.	Route	Conduit No.	Route	Conduit No.
1	094	2	T31	3	T30	5	0110
6	MH-5	7	0150	8	MH-7	9	0200
10	MH-29	11	5908	12	E. Vault #1E	13	2T21E
14	5901	15	PB-2A	16	5901A	17	E. Vault #2E
18	2T22E	19	5940	20	PB-LTG	40	600 V PB

5

Cable/Ckt #: A-2011-1 | Reference: E-45
Function: 480 V Lighting | Conductor Type: 1-3/C + Gnd, #2, 600 V, EPR insulation
From: (E) 480 V LVCC-B Cubicle #37 | To: (E) Manhole-25
Remarks: Splice cable to (E) cable inside MH. The same circuit number installed on previous contract.
Description Of Changes:

Route	Conduit No.	Route	Conduit No.	Route	Conduit No.	Route	Conduit No.
1	103	2	T31	3	T30	4	600 V PB
5	*0081	6	0081	7	MH-7	8	0233
9	MH-10	10	0329	11	MH-13	12	0379
13	*0379	14	MH-16	15	0429	16	MH-19
17	0479	18	MH-22	19	*0529	20	0529
21	MH-25						

Cable/Ckt #: A-2012-1 | Reference: E-45
Function: 480 V Lighting | Conductor Type: 1-3/C + Gnd, #2, 600 V, EPR insulation
From: (E) 480 V LVCC-B Cubicle #38 | To: (E) Manhole-25
Remarks: Splice cable to (E) cable inside MH. The same circuit number installed on previous contract.
Description Of Changes:

Route	Conduit No.	Route	Conduit No.	Route	Conduit No.	Route	Conduit No.
1	105	2	T31	3	T30	4	600 V PB
5	*0081	6	0081	7	MH-7	8	0233
9	MH-10	10	0329	11	MH-13	12	0379
13	*0379	14	MH-16	15	0429	16	MH-19
17	0479	18	MH-22	19	*0529	20	0529
21	MH-25						

5 **REVISED PER ADDENDUM No. 5 DATED JULY 30, 2009**

CABLE AND CIRCUIT SCHEDULE

E-375

REVISED BY | DATE REVISED
CARMELO RIVERA | ELLERY LUCAS
CALCULATED-DESIGNED BY | CHECKED BY
CONSULTANT FUNCTIONAL SUPERVISOR
BEHZAD GOLEMOHAMMADI
STATE OF CALIFORNIA - DEPARTMENT OF TRANSPORTATION
Caltrans

LAST REVISION 00-00-00 | DATE PLOTTED => 28-JUL-2009 | TIME PLOTTED => 06:54

Dist	COUNTY	ROUTE	KILOMETER POST TOTAL PROJECT	SHEET No.	TOTAL SHEETS
04	SF	80	12.7/13.2	500	806

Caltrans Metric

6/25/08
REGISTERED ELECTRICAL ENGINEER

6-23-08
PLANS APPROVAL DATE

REGISTERED PROFESSIONAL ENGINEER
FADI WALIEDDINE
No. 11465
Exp. 12/31/09
ELECTRICAL
STATE OF CALIFORNIA

THE STATE OF CALIFORNIA OR ITS OFFICERS OR AGENTS SHALL NOT BE RESPONSIBLE FOR THE ACCURACY OR COMPLETENESS OF ELECTRONIC COPIES OF THIS PLAN SHEET.

PB AMERICAS, Inc.
A Parsons Brinckerhoff Company
303 Second St., Suite 700N
San Francisco, CA 94107-1317

Cable/Ckt #: A-3043-1 | Reference: E-45
Function: 480 V Lighting | Conductor Type: 1-3/C + Gnd, #2, 600 V, EPR insulation
From: (E) 480 V LVCC-B Cubicle #61 | To: (E) Manhole-25
Remarks: Splice cable to (E) cable inside MH. The same circuit number installed on previous contract.
Description Of Changes:

Route	Conduit No.	Route	Conduit No.	Route	Conduit No.	Route	Conduit No.
1	119	2	T31	3	T30	4	600 V PB
5	*0079	6	0079	7	MH-7	8	0231
9	MH-10	10	0327	11	MH-13	12	0377
13	*0377	14	MH-16	15	0427	16	MH-19
17	0477	18	MH-22	19	*0527	20	0527
21	MH-25						

Cable/Ckt #: A-3057-1 | Reference: E-45
Function: 480 V Lighting | Conductor Type: 1-3/C + Gnd, #2, 600 V, EPR insulation
From: (E) 480 V LVCC-B Cubicle #56 | To: (E) Manhole-25
Remarks: Splice cable to (E) cable inside MH. The same circuit number installed on previous contract.
Description Of Changes:

Route	Conduit No.	Route	Conduit No.	Route	Conduit No.	Route	Conduit No.
1	116	2	T31	3	T30	4	600 V PB
5	*0079	6	0079	7	MH-7	8	0231
9	MH-10	10	0327	11	MH-13	12	0377
13	*0377	14	MH-16	15	0427	16	MH-19
17	0477	18	MH-22	19	*0527	20	0527
21	MH-25						

Cable/Ckt #: CCTV-W01 | Reference: E-148, E-149, E-150, E-152
Function: 120 V Power | Conductor Type: TVP
From: Controller Cabinet TOS-03WA | To: CCTV-W01
Remarks:
Description Of Changes:

Route	Conduit No.	Route	Conduit No.	Route	Conduit No.	Route	Conduit No.
1	TOS-03WA	2	78 mm Nipple	3	Wireway #3W	4	4992
5	CCTV-W01						

Cable/Ckt #: CCTVW01B | Reference: E-148, E-149, E-150, E-152
Function: 120 V Control Power | Conductor Type: TVCP
From: Controller Cabinet TOS-3WA | To: CCTV-W01
Remarks:
Description Of Changes:

Route	Conduit No.	Route	Conduit No.	Route	Conduit No.	Route	Conduit No.
1	TOS-03WA	2	78 mm Nipple	3	Wireway #3W	4	4992
5	CCTV-W01						

Cable/Ckt #: CCTVW01C | Reference: E-148, E-149, E-150, E-152
Function: Low Level Signal | Conductor Type: TVC
From: Controller Cabinet TOS-3WA | To: CCTV-W01
Remarks:
Description Of Changes:

Route	Conduit No.	Route	Conduit No.	Route	Conduit No.	Route	Conduit No.
1	TOS-03WA	2	4072	3	PB-2B	4	4997
5	CCTV-W01						

Cable/Ckt #: CCTVW01D | Reference: E-148, E-149, E-150, E-152
Function: Low Level Signal | Conductor Type: TVL
From: Controller Cabinet TOS-3WA | To: CCTV-W01
Remarks:
Description Of Changes:

Route	Conduit No.	Route	Conduit No.	Route	Conduit No.	Route	Conduit No.
1	TOS-03WA	2	4072	3	PB-2B	4	4997
5	CCTV-W01						

~~Cable/Ckt #: CMSE01 | Reference: E-151, E-152~~
~~Function: Low Level Signal | Conductor Type: Harness #4~~
~~From: Controller Cabinet TOS-03EA | To: TOS Sign CMS-E01~~
~~Remarks:~~
~~Description Of Changes:~~

Route	Conduit No.	Route	Conduit No.	Route	Conduit No.	Route	Conduit No.
1	TOS-03EA	2	5033	3	PB-2B	4	5583
5	5959	6	CMS-E01				

5

5 **REVISED PER ADDENDUM No. 5 DATED JULY 30, 2009**

CABLE AND CIRCUIT SCHEDULE

E-381

REVISED BY | DATE REVISED
CARMELO RIVERA | ELLERY LUCAS
CALCULATED-DESIGNED BY | CHECKED BY
CONSULTANT FUNCTIONAL SUPERVISOR
BEHZAD GOLEMOHAMMADI

STATE OF CALIFORNIA - DEPARTMENT OF TRANSPORTATION
Caltrans

LAST REVISION 00-00-00 | DATE PLOTTED => 28-JUL-2009 | TIME PLOTTED => 06:54

Dist	COUNTY	ROUTE	KILOMETER POST TOTAL PROJECT	SHEET No.	TOTAL SHEETS
04	SF	80	12.7/13.2	501	806

Caltrans Metric

6/25/08
REGISTERED ELECTRICAL ENGINEER

6-23-08
PLANS APPROVAL DATE

REGISTERED PROFESSIONAL ENGINEER
FADI WALIEDDINE
No. 11465
Exp. 12/31/09
ELECTRICAL
STATE OF CALIFORNIA

THE STATE OF CALIFORNIA OR ITS OFFICERS OR AGENTS SHALL NOT BE RESPONSIBLE FOR THE ACCURACY OR COMPLETENESS OF ELECTRONIC COPIES OF THIS PLAN SHEET.

PB AMERICAS, Inc.
A Parsons Brinckerhoff Company
303 Second St., Suite 700N
San Francisco, CA 94107-1317

~~Cable/Ckt #: CMSE02 — Reference: E-151, E-152~~
~~Function: Low Level Signal — Conductor Type: Harness #5~~
~~From: Controller Cabinet TOS-03EA — To: TOS Sign CMS-E01~~
~~Remarks:~~
~~Description Of Changes:~~

Route	Conduit No.	Route	Conduit No.	Route	Conduit No.	Route	Conduit No.
1	TOS-03EA	2	5033	3	PB-2B	4	5583
5	5959	6	CMS-E01				

5

Cable/Ckt #: CMSW01 — Reference: E-151, E-152
Function: Low Level Signal — Conductor Type: Harness #4
From: Controller Cabinet TOS-03WA — To: TOS Sign CMS-W01
Remarks:
Description Of Changes:

Route	Conduit No.	Route	Conduit No.	Route	Conduit No.	Route	Conduit No.
1	TOS-03WA	2	4072	3	PB-2B	4	4987
5	CMS-W01						

Cable/Ckt #: CMSW02 — Reference: E-151, E-152
Function: Low Level Signal — Conductor Type: Harness #5
From: Controller Cabinet TOS-03WA — To: TOS Sign CMS-W01
Remarks:
Description Of Changes:

Route	Conduit No.	Route	Conduit No.	Route	Conduit No.	Route	Conduit No.
1	TOS-03WA	2	4072	3	PB-2B	4	4987
5	CMS-W01						

Cable/Ckt #: LP217-1,3,5 — Reference: E-96, E-115
Function: 120 V Lighting — Conductor Type: 1-4/C + Gnd, #8, 600 V, EPR insulation
From: 208/120 V Utility Panel LP-217 — To: PB-LTG at 120 V Bike Path Ltg.
Remarks: Coil conductor in last PB-LTG for future splicing. Bike path lighting circuits- 3ph, 4W, 208/120V load.
Description Of Changes:

Route	Conduit No.	Route	Conduit No.	Route	Conduit No.	Route	Conduit No.
1	LP-217	2	5047	3	Wireway #2E	4	5931
5	E. Vault #2E	6	2T22E	7	5978	8	2313
9	5988	10	2827	11	PB-LTG		

Cable/Ckt #: LP217-2,4,6 — Reference: E-96, E-115
Function: 120 V Lighting — Conductor Type: 1-4/C + Gnd, #8, 600 V, EPR insulation
From: 208/120 V Utility Panel LP-217 — To: PB-LTG at 120 V Bike Path Ltg.
Remarks: Coil conductors in last PB-LTG for future extension. Bike Path lighting circuits- 3ph, 4W, 208/120V Load.
Description Of Changes:

Route	Conduit No.	Route	Conduit No.	Route	Conduit No.	Route	Conduit No.
1	LP-217	2	5047	3	Wireway #2E	4	5931
5	E. Vault #2E	6	2T22E	7	5978	8	2313
9	5988	10	2727	11	PB-LTG		

Cable/Ckt #: LP218-1 — Reference: E-97
Function: 120 V Lighting — Conductor Type: 3-1/C #10, 600 V, RHH/RHW insulation
From: PB-1C — To: Bike Path Light
Remarks:
Description Of Changes:

Route	Conduit No.	Route	Conduit No.	Route	Conduit No.	Route	Conduit No.
1	FIELD						

Cable/Ckt #: LP218-1,3,5 — Reference: E-97, E-116
Function: 120 V Lighting — Conductor Type: 1-4/C + Gnd, #8, 600 V, EPR insulation
From: 208/120 V Utility panel LP-218 — To: PB-LTG at 120 V Bike Path Ltg.
Remarks: Coil circuit wiring in last PB-LTG for future splicing. Bike Path lighting circuits- 3ph, 4W, 208/120V Load.
Description Of Changes:

Route	Conduit No.	Route	Conduit No.	Route	Conduit No.	Route	Conduit No.
1	LP-218	2	5573	3	Wireway #3E	4	5951
5	E. Vault #3E	6	2T23E	7	5947	8	2742
9	2741	10	PB-LTG				

CABLE AND CIRCUIT SCHEDULE

5 **REVISED PER ADDENDUM No. 5 DATED JULY 30, 2009**

E-382

REVISED BY | DATE REVISED
CARMELO RIVERA | ELLERY LUCAS
CALCULATED-DESIGNED BY | CHECKED BY
CONSULTANT FUNCTIONAL SUPERVISOR: BEHZAD GOLEMOHAMMADI
STATE OF CALIFORNIA - DEPARTMENT OF TRANSPORTATION
Caltrans

LAST REVISION 00-00-00 | DATE PLOTTED => 28-JUL-2009 | TIME PLOTTED => 06:54

Dist	COUNTY	ROUTE	KILOMETER POST TOTAL PROJECT	SHEET No.	TOTAL SHEETS
04	SF	80	12.7/13.2	502	806

Caltrans Metric

6/25/08
REGISTERED ELECTRICAL ENGINEER

6-23-08
PLANS APPROVAL DATE

REGISTERED PROFESSIONAL ENGINEER
FADI WALIEDDINE
No. 11465
Exp. 12/31/09
ELECTRICAL
STATE OF CALIFORNIA

THE STATE OF CALIFORNIA OR ITS OFFICERS OR AGENTS SHALL NOT BE RESPONSIBLE FOR THE ACCURACY OR COMPLETENESS OF ELECTRONIC COPIES OF THIS PLAN SHEET.

PB AMERICAS, Inc.
A Parsons Brinckerhoff Company
303 Second St., Suite 700N
San Francisco, CA 94107-1317

~~Cable/Ckt #: LP218-2 | Reference: E-97~~
~~Function: 120 V Lighting | Conductor Type: 3-1/C #10, 600 V, RHH/RHW insulation~~
~~From: PB-1C | To: Bike Path Light~~
~~Remarks:~~
~~Description Of Changes:~~

Route	Conduit No.	Route	Conduit No.	Route	Conduit No.	Route	Conduit No.
1	FIELD						

5

Cable/Ckt #: LP218-2,4,6 | Reference: E-97, E-116
Function: 120 V Lighting | Conductor Type: 1-4/C + Gnd, #8, 600 V, EPR insulation
From: 208/120 V Utility panel LP-218 | To: PB-LTG at 120 V Bike Path Ltg.
Remarks:
Description Of Changes:

Route	Conduit No.	Route	Conduit No.	Route	Conduit No.	Route	Conduit No.
1	LP-218	2	5573	3	Wireway #3E	4	5951
5	E. Vault #3E	6	2T23E	7	5889	8	2421
9	2422	10	2423	11	5966	12	PB-LTG

Cable/Ckt #: LP218-3 | Reference: E-97
Function: 120 V Lighting | Conductor Type: 3-1/C #10, 600 V, RHH/RHW insulation
From: PB-1C | To: Bike Path Light
Remarks:
Description Of Changes:

Route	Conduit No.	Route	Conduit No.	Route	Conduit No.	Route	Conduit No.
1	FIELD						

~~Cable/Ckt #: LP218-4 | Reference: E-97~~
~~Function: 120 V Lighting | Conductor Type: 3-1/C #10, 600 V, RHH/RHW insulation~~
~~From: PB-1C | To: Bike Path Light~~
~~Remarks:~~
~~Description Of Changes:~~

Route	Conduit No.	Route	Conduit No.	Route	Conduit No.	Route	Conduit No.
1	FIELD						

5

Cable/Ckt #: LP218-5 | Reference: E-97
Function: 120 V Lighting | Conductor Type: 3-1/C #10, 600 V, RHH/RHW insulation
From: PB-1C | To: Bike Path Light
Remarks:
Description Of Changes:

Route	Conduit No.	Route	Conduit No.	Route	Conduit No.	Route	Conduit No.
1	FIELD						

~~Cable/Ckt #: LP218-6 | Reference: E-97~~
~~Function: 120 V Lighting | Conductor Type: 3-1/C #10, 600 V, RHH/RHW insulation~~
~~From: PB-1C | To: Bike Path Light~~
~~Remarks:~~
~~Description Of Changes:~~

Route	Conduit No.	Route	Conduit No.	Route	Conduit No.	Route	Conduit No.
1	FIELD						

5

Cable/Ckt #: LPA-36 | Reference: E-13
Function: 120 V Power | Conductor Type: 1-2/C + Gnd, #12, 600 V, EPR insulation
From: 208/120 V Utility Panel LP-A | To: Irrigation Controller Panel
Remarks:
Description Of Changes:

Route	Conduit No.	Route	Conduit No.	Route	Conduit No.	Route	Conduit No.
1	217	2	T32	3	T34	4	T35
5	218						

Cable/Ckt #: PLE02A | Reference: E-147, E-152
Function: Low Level Signal | Conductor Type: 10 DLC
From: Controller Cabinet TOS-02EA | To: PL-E02 PB at Sta 53+97
Remarks:
Description Of Changes:

Route	Conduit No.	Route	Conduit No.	Route	Conduit No.	Route	Conduit No.
1	5008	2	PB-2B	3	5936	4	TC Vault #2E
5	2T42E	6	5938	7	PB-4D		

5 **REVISED PER ADDENDUM No. 5 DATED JULY 30, 2009**

CABLE AND CIRCUIT SCHEDULE

E-383

REVISED BY | DATE REVISED
CARMELO RIVERA | ELLERY LUCAS
CALCULATED-DESIGNED BY | CHECKED BY
CONSULTANT FUNCTIONAL SUPERVISOR
BEHZAD GOLEMOHAMMADI
STATE OF CALIFORNIA - DEPARTMENT OF TRANSPORTATION
Caltrans

LAST REVISION 00-00-00 | DATE PLOTTED => 28-JUL-2009 | TIME PLOTTED => 06:54

Dist	COUNTY	ROUTE	KILOMETER POST TOTAL PROJECT	SHEET No.	TOTAL SHEETS
04	SF	80	12.7/13.2	503	806

Caltrans Metric

6/25/08
REGISTERED ELECTRICAL ENGINEER

6-23-08
PLANS APPROVAL DATE

REGISTERED PROFESSIONAL ENGINEER
FADI WALIEDDINE
No. 11465
Exp. 12/31/09
ELECTRICAL
STATE OF CALIFORNIA

THE STATE OF CALIFORNIA OR ITS OFFICERS OR AGENTS SHALL NOT BE RESPONSIBLE FOR THE ACCURACY OR COMPLETENESS OF ELECTRONIC COPIES OF THIS PLAN SHEET.

PB AMERICAS, Inc.
A Parsons Brinckerhoff Company
303 Second St., Suite 700N
San Francisco, CA 94107-1317

Cable/Ckt #: PLW01 — Reference: E-147, E-152
Function: Low Level Signal — Conductor Type: 10 DLC
From: Controller Cabinet TOS-03WB — To: PL-W01 PB at Sta 54+15
Remarks:
Description Of Changes:

Route	Conduit No.	Route	Conduit No.	Route	Conduit No.	Route	Conduit No.
1	4079	2	TOS-03WA	3	4072	4	PB-2B
5	4059	6	TC Vault 3W	7	1T43W	8	4969
9	PL-W01						

Cable/Ckt #: PLW11 — Reference: E-147, E-152
Function: Low Level Signal — Conductor Type: 12 DLC
From: PL-W11 — To: Controller Cabinet TOS-01A
Remarks:
Description Of Changes:

Route	Conduit No.	Route	Conduit No.	Route	Conduit No.	Route	Conduit No.
1	4044	2	PB-2B	3	4926	4	TC Vault #1W
5	1T41W	5	1T41W	6	4915	7	PL-W11

Cable/Ckt #: S-1001 — Reference: E-53
Function: 480 V Lighting — Conductor Type: 3-1/C #10, 600 V, RHH/RHW insulation
From: Barrier pull boxes PB-LTG — To: Roadway Safety Lighting
Remarks: For Light Poles 1001-16 to 1001-1
Description Of Changes:

Route	Conduit No.	Route	Conduit No.	Route	Conduit No.	Route	Conduit No.
1	FIELD						

Cable/Ckt #: S-1001-1 — Reference: E-41, E-53
Function: 480 V Lighting — Conductor Type: 1-3/C + Gnd, #8, 600 V, EPR insulation
From: (E) 480 V LVCC-A Cubicle #15 — To: Pull Box PB-LTG
Remarks:
Description Of Changes:

Route	Conduit No.	Route	Conduit No.	Route	Conduit No.	Route	Conduit No.
1	037	2	T20	3	600 V PB	4	0125
5	MH-5	6	0168	7	MH-7	8	0226
9	MH-30	10	4913				

5

~~Cable/Ckt #: S-1001-2 — Reference: E-53~~
~~Function: 480 V Lighting — Conductor Type: 3 + 1 Gnd, #8, #10, 600 V, RHH/RHW insulation~~
~~From: Pull Box PB-LTG — To: Barrier pull Boxes PB-LTG~~
~~Remarks: For Light Poles S-1001-3 through S-1001-16~~
~~Description Of Changes:~~

Route	Conduit No.	Route	Conduit No.	Route	Conduit No.	Route	Conduit No.
1	1306	2	1305	3	1304	4	1303
5	1302	6	1301	7	1546	8	1547
9	1545	10	1544	11	1543	12	1542
13	1541	14	1540	15	1778	16	1779
17	1612	18	1613				

Cable/Ckt #: S-1002 — Reference: E-53
Function: 480 V Lighting — Conductor Type: 3-1/C #10, 600 V, RHH/RHW insulation
From: Barrier pull Boxes PB-LTG — To: Transition Structure Roadway Safety Ltg.
Remarks: For Light Poles 1002-1 to 1002-10
Description Of Changes:

Route	Conduit No.	Route	Conduit No.	Route	Conduit No.	Route	Conduit No.
1	FIELD						

Cable/Ckt #: S-1002-1 — Reference: E-41, E-53
Function: 480 V Lighting — Conductor Type: 1-3/C + Gnd, #8, 600 V, EPR insulation
From: (E) 480 V LVCC-A Cubicle #16 — To: Pull Box PB-LTG
Remarks: Splice with cable S-1002-2 & S-1002-3 in MH-30. (Multi-conductor to single conductor)
Description Of Changes:

Route	Conduit No.	Route	Conduit No.	Route	Conduit No.	Route	Conduit No.
1	037	2	T20	3	600 V PB	4	0125
5	MH-5	6	0169	7	MH-7	8	0227
9	MH-30						

5 **REVISED PER ADDENDUM No. 5 DATED JULY 30, 2009**

CABLE AND CIRCUIT SCHEDULE

E-384

REVISED BY | DATE REVISED
CARMELO RIVERA | ELLERY LUCAS
CALCULATED-DESIGNED BY | CHECKED BY
CONSULTANT FUNCTIONAL SUPERVISOR
BEHZAD GOLEMOHAMMADI
STATE OF CALIFORNIA - DEPARTMENT OF TRANSPORTATION
Caltrans

LAST REVISION 00-00-00 | DATE PLOTTED => 28-JUL-2009 | TIME PLOTTED => 06:54

Dist	COUNTY	ROUTE	KILOMETER POST TOTAL PROJECT	SHEET No.	TOTAL SHEETS
04	SF	80	12.7/13.2	505	806

Caltrans Metric

6/25/08
REGISTERED ELECTRICAL ENGINEER

6-23-08
PLANS APPROVAL DATE

REGISTERED PROFESSIONAL ENGINEER
FADI WALIEDDINE
No. 11465
Exp. 12/31/09
ELECTRICAL
STATE OF CALIFORNIA

THE STATE OF CALIFORNIA OR ITS OFFICERS OR AGENTS SHALL NOT BE RESPONSIBLE FOR THE ACCURACY OR COMPLETENESS OF ELECTRONIC COPIES OF THIS PLAN SHEET.

PB AMERICAS, Inc.
A Parsons Brinckerhoff Company
303 Second St., Suite 700N
San Francisco, CA 94107-1317

Cable/Ckt #: S-1022
Reference: E-55
Function: 480 V Lighting
Conductor Type: 3-1/C #10, 600 V, RHH/RHW insulation
From: Roadway Lighting Fixtures
To: Barrier pull boxes PB-LTG
Remarks: For Light Poles 1022-1 to 1022-10
Description Of Changes:

Route	Conduit No.	Route	Conduit No.	Route	Conduit No.	Route	Conduit No.
1	FIELD						

Cable/Ckt #: S-1022-1
Reference: E-41, E-55
Function: 480 V Lighting
Conductor Type: 1-3/C + Gnd, #8, 600 V, EPR insulation
From: (E) 480 V LVCC-A Cubicle #28
To: PB-2J (Loc. Electrical Vault #1W)
Remarks: Splice cable with S-1022-2 & S-1022-3 inside PB-2J. (Multi-conductor to single conductor)
Description Of Changes:

Route	Conduit No.	Route	Conduit No.	Route	Conduit No.	Route	Conduit No.
1	044	2	T20	3	600 V PB	4	0125
5	MH-5	6	0169	7	MH-7	8	0228
9	MH-30	10	4211	11	E. Vault #1W	12	1T21W
13	4016	14	PB-2J				

Cable/Ckt #: S-1022-2
Reference: E-55
Function: 480 V Lighting
Conductor Type: 1-3/C + Gnd, #8, 600 V, EPR insulation
From: PB-2J (Loc. Electrical Vault #1W)
To: Barrier pull Boxes PB-LTG
Remarks: Splice cable with S-1022-1 and S-1022-3. (Multi-conductor to single conductor)
Description Of Changes:

Route	Conduit No.	Route	Conduit No.	Route	Conduit No.	Route	Conduit No.
1	PB-2J	2	4016	3	1T21W	4	4026

Cable/Ckt #: S-1022-2A
Reference: E-55
Function: 480 V Lighting
Conductor Type: 3 + 1 Gnd, #8, #10, 600 V, RHH/RHW insulation
From: PB-LTG (Platform #1W)
To: Barrier pull Boxes PB-LTG
Remarks: For Light poles 1022-1, -2 & -3.
Description Of Changes:

Route	Conduit No.	Route	Conduit No.	Route	Conduit No.	Route	Conduit No.
1	1707	2	1706	3	1708		

~~Cable/Ckt #: S-1022-3~~
~~Reference: E-55~~
~~Function: 480 V Lighting~~
~~Conductor Type: 1-3/C + Gnd, #8, 600 V, EPR insulation~~
~~From: PB-2J (Loc. Electrical Vault #1W)~~
~~To: PB-LTG (Platfrom #2W)~~
~~Remarks: Splice cable with S-1022-1 and S-1022-2. (Multi-conductor to single conductor)~~
~~Description Of Changes:~~

Route	Conduit No.	Route	Conduit No.	Route	Conduit No.	Route	Conduit No.
1	PB-2J	2	4016	3	1T41W	4	E. Vault #1W
5	4901	6	PB-2E	7	4928	8	E. Vault #2W
9	1T22W	10	4965	11	PB-LTG		

5

Cable/Ckt #: S-1022-3A
Reference: E-55
Function: 480 V Lighting
Conductor Type: 3 + 1 Gnd, #8, #10, 600 V, RHH/RHW insulation
From: PB-LTG (Platfrom #2W)
To: PB-LTG
Remarks: For Light Poles 1022-4,-5,-6,-7,-8,-9,-10.
Description Of Changes:

Route	Conduit No.	Route	Conduit No.	Route	Conduit No.	Route	Conduit No.
1	1718	2	1717	3	1716	4	1715
5	1714	6	1713	7	1712		

Cable/Ckt #: S-1023
Reference: E-56
Function: 480 V Lighting
Conductor Type: 3-1/C #10, 600 V, RHH/RHW insulation
From: Roadway Lighting Fixtures
To: Barrier pull Boxes PB-LTG
Remarks: For Light Poles 1023-1 to 1023-3
Description Of Changes:

Route	Conduit No.	Route	Conduit No.	Route	Conduit No.	Route	Conduit No.
1	FIELD						

5 REVISED PER ADDENDUM No. 5 DATED JULY 30, 2009

CABLE AND CIRCUIT SCHEDULE

E-386

REVISED BY | DATE REVISED
CARMELO RIVERA | ELLERY LUCAS
CALCULATED-DESIGNED BY | CHECKED BY
SUPERVISOR | CONSULTANT FUNCTIONAL SUPERVISOR
BEHZAD GOLEMOHAMMADI
STATE OF CALIFORNIA - DEPARTMENT OF TRANSPORTATION
Caltrans

LAST REVISION 00-00-00 | DATE PLOTTED => 28-JUL-2009 | TIME PLOTTED => 06:55

Dist	COUNTY	ROUTE	KILOMETER POST TOTAL PROJECT	SHEET No.	TOTAL SHEETS
04	SF	80	12.7/13.2	510	806

Caltrans Metric

6/25/08
REGISTERED ELECTRICAL ENGINEER

6-23-08
PLANS APPROVAL DATE

REGISTERED PROFESSIONAL ENGINEER
FADI WALIEDDINE
No. 11465
Exp. 12/31/09
ELECTRICAL
STATE OF CALIFORNIA

THE STATE OF CALIFORNIA OR ITS OFFICERS OR AGENTS SHALL NOT BE RESPONSIBLE FOR THE ACCURACY OR COMPLETENESS OF ELECTRONIC COPIES OF THIS PLAN SHEET.

PB AMERICAS, Inc.
A Parsons Brinckerhoff Company
303 Second St., Suite 700N
San Francisco, CA 94107-1317

Cable/Ckt #: S-2041-3A
Reference: E-95
Function: 480 V Lighting
Conductor Type: 3 + 1 Gnd, #8, #10, 600 V, RHH/RHW insulation
From: PB-LTG (Platform #1E)
To: PB-LTG
Remarks: Splice in PB-LTG for Light poles 2041-1 to 2041-7.
Description Of Changes:

Route	Conduit No.	Route	Conduit No.	Route	Conduit No.	Route	Conduit No.
1	2706	2	2705	3	2711	4	2707
5	2708	6	2791	7	2709	8	2710

~~Cable/Ckt #: S-2042~~
~~Reference: E-95~~
~~Function: 480 V Lighting~~
~~Conductor Type: 1-3/C #10, 600 V, EPR insulation~~
~~From: Barrier pull boxes PB-LTG~~
~~To: Roadway Lighting Fixtures~~
~~Remarks: For Light Poles 2042-1 to 2042-11~~
~~Description Of Changes:~~

Route	Conduit No.	Route	Conduit No.	Route	Conduit No.	Route	Conduit No.
1	FIELD						

5

Cable/Ckt #: S-2042-1
Reference: E-44, E-95
Function: 480 V Lighting
Conductor Type: 1-3/C + Gnd, #6, 600 V, EPR insulation
From: (E) 480 V LVCC-B Cubicle #16
To: PB-LTG (Hinge W6RB)
Remarks: Coil cable at the last PB-LTG for future ckt S-2042-1.
Description Of Changes:

Route	Conduit No.	Route	Conduit No.	Route	Conduit No.	Route	Conduit No.
1	090	2	T31	3	T30	4	600 V PB
5	0112	6	MH-5	7	0152	8	MH-7
9	0202	10	MH-29	11	5908	12	E. Vault #1E
13	2T21E	14	5902	15	PB-2A	16	5902A
17	E. Vault #2E	18	2T22E	19	5976	20	2413
21	5888	22	PB-LTG	23	2727	24	PB-LTG

Cable/Ckt #: S-3021-1
Reference: E-42
Function: 480 V Lighting
Conductor Type: 1-3/C + Gnd, #4, 600 V, EPR insulation
From: (E) 480 V LVCC-A Cubicle #62
To: (E) Manhole-25
Remarks: Splice cable to (E) cable inside MH. The same circuit number installed on previous contract.
Description Of Changes:

Route	Conduit No.	Route	Conduit No.	Route	Conduit No.	Route	Conduit No.
1	067	2	T20	3	600 V PB	4	0115
5	MH-5	6	0155	7	MH-7	8	0207
9	MH-10	10	0304	11	MH-13	12	0354
13	*0354	14	MH-16	15	0404	16	MH-19
17	0454	18	MH-22	19	*0504	20	0504
21	MH-25						

~~Cable/Ckt #: S-3022-1~~
~~Reference: E-42~~
~~Function: 480 V Lighting~~
~~Conductor Type: 1-3/C + Gnd, #4, 600 V, EPR insulation~~
~~From: (E) 480 V LVCC-A Cubicle #63~~
~~To: (E) Manhole-25~~
~~Remarks: Splice cable to (E) cable inside MH. The same circuit number installed on previous contract.~~
~~Description Of Changes:~~

Route	Conduit No.	Route	Conduit No.	Route	Conduit No.	Route	Conduit No.
1	067	2	T20	3	600 V PB	4	0115
5	MH-5	6	0155	7	MH-7	8	0207
9	MH-10	10	0304	11	MH-13	12	0354
13	*0354	14	MH-16	15	0404	16	MH-19
17	0454	18	MH-22	19	*0504	20	0504
21	MH-25						

5

Cable/Ckt #: S-3023-1
Reference: E-42
Function: 480 V Lighting
Conductor Type: 1-3/C + Gnd, #4, 600 V, EPR insulation
From: (E) 480 V LVCC-A Cubicle #64
To: (E) Manhole-25
Remarks: Splice cable to (E) cable inside MH. The same circuit number installed on previous contract.
Description Of Changes:

Route	Conduit No.	Route	Conduit No.	Route	Conduit No.	Route	Conduit No.
1	067	2	T20	3	600 V PB	4	0115
5	MH-5	6	0155	7	MH-7	8	0207
9	MH-10	10	0304	11	MH-13	12	0354
13	*0354	14	MH-16	15	0404	16	MH-19
17	0454	18	MH-22	19	*0504	20	0504
21	MH-25						

5 **REVISED PER ADDENDUM No. 5 DATED JULY 30, 2009**

CABLE AND CIRCUIT SCHEDULE

E-391

REVISED BY | DATE REVISED
CARMELO RIVERA | ELLERY LUCAS
CALCULATED-DESIGNED BY | CHECKED BY
CONSULTANT FUNCTIONAL SUPERVISOR
BEHZAD GOLEMOHAMMADI

STATE OF CALIFORNIA - DEPARTMENT OF TRANSPORTATION
Caltrans

LAST REVISION 00-00-00
DATE PLOTTED => 28-JUL-2009
TIME PLOTTED => 06:55

Dist	COUNTY	ROUTE	KILOMETER POST TOTAL PROJECT	SHEET No.	TOTAL SHEETS
04	SF	80	12.7/13.2	511	806

Caltrans Metric

6/25/08
REGISTERED ELECTRICAL ENGINEER

6-23-08
PLANS APPROVAL DATE

REGISTERED PROFESSIONAL ENGINEER
FADI WALIEDDINE
No. 11465
Exp. 12/31/09
ELECTRICAL
STATE OF CALIFORNIA

THE STATE OF CALIFORNIA OR ITS OFFICERS OR AGENTS SHALL NOT BE RESPONSIBLE FOR THE ACCURACY OR COMPLETENESS OF ELECTRONIC COPIES OF THIS PLAN SHEET.

PB AMERICAS, Inc.
A Parsons Brinckerhoff Company
303 Second St., Suite 700N
San Francisco, CA 94107-1317

Cable/Ckt #: S-3051-1 | Reference: E-45
Function: 480 V Lighting | Conductor Type: 1-3/C + Gnd, #4, 600 V, EPR insulation
From: (E) 480 V LVCC-B Cubicle #62 | To: (E) Manhole-25
Remarks: Splice cable to (E) cable inside MH. The same circuit number installed on previous contract.
Description Of Changes:

Route	Conduit No.	Route	Conduit No.	Route	Conduit No.	Route	Conduit No.
1	121	2	T31	3	T30	4	600 V PB
5	*0080	6	0080	7	MH-7	8	0232
9	MH-10	10	0328	11	MH-13	12	0378
13	*0378	14	MH-16	15	0428	16	MH-19
17	0478	18	MH-22	19	*0528	20	0528
21	MH-25						

Cable/Ckt #: S-3052-1 | Reference: E-45
Function: 480 V Lighting | Conductor Type: 1-3/C + Gnd, #2, 600 V, EPR insulation
From: (E) 480 V LVCC-B Cubicle #63 | To: (E) Manhole-25
Remarks: Splice cable to (E) cable inside MH. The same circuit number installed on previous contract.
Description Of Changes:

Route	Conduit No.	Route	Conduit No.	Route	Conduit No.	Route	Conduit No.
1	119	2	T31	3	T30	4	600 V PB
5	*0080	6	0080	7	MH-7	8	0232
9	MH-10	10	0328	11	MH-13	12	0378
13	*0378	14	MH-16	15	0428	16	MH-19
17	0478	18	MH-22	19	*0528	20	0528
21	MH-25						

~~Cable/Ckt #: S-3053-1 | Reference: E-45~~
~~Function: 480 V Lighting | Conductor Type: 1-3/C + Gnd, #4, 600 V, EPR insulation~~
~~From: (E) 480 V LVCC-B Cubicle #64 | To: (E) Manhole-25~~
~~Remarks: Splice cable to (E) cable inside MH. The same circuit number installed on previous contract.~~
~~Description Of Changes:~~

Route	Conduit No.	Route	Conduit No.	Route	Conduit No.	Route	Conduit No.
1	121	2	T31	3	T30	4	600 V PB
5	*0080	6	0080	7	MH-7	8	0232
9	MH-10	10	0328	11	MH-13	12	0378
13	*0378	14	MH-16	15	0428	16	MH-19
17	0478	18	MH-22	19	*0528	20	0528
21	MH-25						

5

~~Cable/Ckt #: S-3056-1 | Reference: E-42~~
~~Function: 480 V Lighting | Conductor Type: 1-3/C + Gnd, #6, 600 V, EPR insulation~~
~~From: (E) 480 V LVCC-A Cubicle #55 | To: (E) Manhole-25~~
~~Remarks: Splice cable to (E) cable inside MH. The same circuit number installed on previous contract.~~
~~Description Of Changes:~~

Route	Conduit No.	Route	Conduit No.	Route	Conduit No.	Route	Conduit No.
1	062	2	T20	3	600 V PB	4	0116
5	MH-5	6	0158	7	MH-7	8	0209
9	MH-10	10	0306	11	MH-13	12	0356
13	MH-16	14	0406	15	MH-19	16	0456
17	MH-22	18	0506	19	MH-25		

5

Cable/Ckt #: UP101-1 | Reference: E-70
Function: 120 V Control Power | Conductor Type: 2 + 1 Gnd, #12, #12, 600 V, RHH/RHW insulation
From: 208/120 V Utility Panel UP-101 | To: Overhead Sign "A"
Remarks:
Description Of Changes:

Route	Conduit No.	Route	Conduit No.	Route	Conduit No.	Route	Conduit No.
1	UP-101	2	4002	3	Wireway #1W	4	4922
5	E. Vault #1W	6	4951				

Cable/Ckt #: UP101-10 | Reference: E-70
Function: 120 V Power | Conductor Type: 2 + 1 Gnd, #10, #10, 600 V, RHH/RHW insulation
From: 208/120 V Utility Panel UP-101 | To: Controller Cabinet TOS-01WA
Remarks:
Description Of Changes:

Route	Conduit No.	Route	Conduit No.	Route	Conduit No.	Route	Conduit No.
1	UP-101	2	4002	3	Wireway #1W	4	78 mm Nipple
5	TOS-01WA						

CABLE AND CIRCUIT SCHEDULE

5 **REVISED PER ADDENDUM No. 5 DATED JULY 30, 2009**

E-392

STATE OF CALIFORNIA - DEPARTMENT OF TRANSPORTATION
Caltrans
CONSULTANT FUNCTIONAL SUPERVISOR: BEHZAD GOLEMOHAMMADI
CALCULATED-DESIGNED BY: CARMELO RIVERA
CHECKED BY: ELLERY LUCAS
REVISED BY / DATE REVISED

LAST REVISION 00-00-00 | DATE PLOTTED => 28-JUL-2009 | TIME PLOTTED => 06:55

Dist	COUNTY	ROUTE	KILOMETER POST TOTAL PROJECT	SHEET No.	TOTAL SHEETS
04	SF	80	12.7/13.2	512	806

REGISTERED ELECTRICAL ENGINEER 6/25/08

6-23-08
PLANS APPROVAL DATE

REGISTERED PROFESSIONAL ENGINEER FADI WALIEDDINE No. 11465 Exp. 12/31/09 ELECTRICAL STATE OF CALIFORNIA

THE STATE OF CALIFORNIA OR ITS OFFICERS OR AGENTS SHALL NOT BE RESPONSIBLE FOR THE ACCURACY OR COMPLETENESS OF ELECTRONIC COPIES OF THIS PLAN SHEET.

PB AMERICAS, Inc.
A Parsons Brinckerhoff Company
303 Second St., Suite 700N
San Francisco, CA 94107-1317

5

Cable/Ckt #: UP101-2A
Reference: E-70, E-170
Function: 120 V Power
Conductor Type: 3 + 1 Gnd, #12, #12, 600 V, RHH/RHW insulation
From: 208/120 V Utility Panel UP-101
To: CB-138B & CB-139B
Remarks:
Description Of Changes:

Route	Conduit No.	Route	Conduit No.	Route	Conduit No.	Route	Conduit No.
1	4002	2	Wireway #1W	3	4921	4	4026
5	1707	6	1705	7	1704	8	1703
9	1702	10	1701	11	1776	12	PB-LTG

Cable/Ckt #: UP101-2B
Reference: E-70, E-170
Function: 120 V Power
Conductor Type: 3 + 1 Gnd, #12, #12, 600 V, RHH/RHW insulation
From: PB-LTG
To: CB-138A & CB-139A
Remarks:
Description Of Changes:

Route	Conduit No.	Route	Conduit No.	Route	Conduit No.	Route	Conduit No.
1	PB-LTG	2	4899	3	PB-LTG	4	1401
5	1646	6	1645	7	1647	8	1644
9	1643	10	PB-LTG	11	1302	12	1303
13	1304	14	1305	15	PB-LTG		

Cable/Ckt #: UP101-5
Reference: E-70
Function: 120 V Power
Conductor Type: 2 + 1 Gnd, #12, #12, 600 V, RHH/RHW insulation
From: 208/120 V Utility Panel UP-101
To: GFI Receptacles (Platform #1W)
Remarks:
Description Of Changes:

Route	Conduit No.	Route	Conduit No.	Route	Conduit No.	Route	Conduit No.
1	4002	2	Wireway #1W				

Cable/Ckt #: UP102-3
Reference: E-70
Function: 120 V Power
Conductor Type: 2 + 1 Gnd, #12, #12, 600 V, RHH/RHW insulation
From: 208/120 V Utility Panel UP-102
To: Receptacle
Remarks:
Description Of Changes:

Route	Conduit No.	Route	Conduit No.	Route	Conduit No.	Route	Conduit No.
1	4021	2	Wireway #2W	3	4965		

5

Cable/Ckt #: UP102-5
Reference: E-70
Function: 120 V Power
Conductor Type: 2 + 1 Gnd, #12, #12, 600 V, RHH/RHW insulation
From: 208/120 V Utility Panel UP-102
To: GFI Receptacles (Platform #2W)
Remarks:
Description Of Changes:

Route	Conduit No.	Route	Conduit No.	Route	Conduit No.	Route	Conduit No.
1	4022	2	Wireway #2W				

Cable/Ckt #: UP103-10
Reference: E-71
Function: 120 V Power
Conductor Type: 2 + 1 Gnd, #10, #10, 600 V, RHH/RHW insulation
From: 208/120 V Utility Panel UP-103
To: Controller Cabiner TOS-3WA
Remarks:
Description Of Changes:

Route	Conduit No.	Route	Conduit No.	Route	Conduit No.	Route	Conduit No.
1	UP-103	2	4051	3	Wireway #3W	4	78 mm Nipple
5	TOS-3WA						

Cable/Ckt #: UP103-11
Reference: E-71, E-141
Function: 120 V Power
Conductor Type: 1-2/C + Gnd, #12, 600 V, EPR insulation
From: 208/120 V Utility Panel UP-103
To: Remote Terminal Unit RTU #9W
Remarks:
Description Of Changes:

Route	Conduit No.	Route	Conduit No.	Route	Conduit No.	Route	Conduit No.
1	UP-103	2	4053	3	Wireway #3W	4	78 mm Nipple
5	RTU #9W						

5 **REVISED PER ADDENDUM No. 5 DATED JULY 30, 2009**

CABLE AND CIRCUIT SCHEDULE

E-393

REVISED BY | DATE REVISED
CARMELO RIVERA | ELLERY LUCAS
CALCULATED-DESIGNED BY | CHECKED BY
CONSULTANT FUNCTIONAL SUPERVISOR
BEHZAD GOLEMOHAMMADI
STATE OF CALIFORNIA - DEPARTMENT OF TRANSPORTATION
Caltrans

LAST REVISION 00-00-00 | DATE PLOTTED => 28-JUL-2009 | TIME PLOTTED => 06:55

Dist	COUNTY	ROUTE	KILOMETER POST TOTAL PROJECT	SHEET No.	TOTAL SHEETS
04	SF	80	12.7/13.2	513	806

6/25/08
REGISTERED ELECTRICAL ENGINEER

6-23-08
PLANS APPROVAL DATE

REGISTERED PROFESSIONAL ENGINEER
FADI WALIEDDINE
No. 11465
Exp. 12/31/09
ELECTRICAL
STATE OF CALIFORNIA

THE STATE OF CALIFORNIA OR ITS OFFICERS OR AGENTS SHALL NOT BE RESPONSIBLE FOR THE ACCURACY OR COMPLETENESS OF ELECTRONIC COPIES OF THIS PLAN SHEET.

PB AMERICAS, Inc.
A Parsons Brinckerhoff Company
303 Second St., Suite 700N
San Francisco, CA 94107-1317

Caltrans Metric

Cable/Ckt #: UP103-12 **Reference:** E-71
Function: 120 V Power **Conductor Type:** 2 + 1 Gnd, #10, #10, 600 V, RHH/RHW insulation
From: 208/120 V Utility Panel UP-103 **To:** Controller Cabinet TOS-3WB
Remarks:
Description Of Changes:

Route	Conduit No.	Route	Conduit No.	Route	Conduit No.	Route	Conduit No.
1	UP-103	2	4051	3	Wireway #3W	4	78 mm Nipple
5	TOS-3WB						

~~**Cable/Ckt #:** UP103-2 **Reference:** E-71, E-170~~
~~**Function:** 120 V Power **Conductor Type:** 3 + 1 Gnd, #12, #12, 600 V, RHH/RHW insulation~~
~~**From:** 208/120 V Utility Panel UP-103 **To:** PB-LTG~~
~~**Remarks:** For CB-140A & CB-140B~~
~~**Description Of Changes:**~~

Route	Conduit No.	Route	Conduit No.	Route	Conduit No.	Route	Conduit No.
1	4053	2	Wireway #3W	4	4999	5	1722
6	1723	7	1724	8	1725	9	1727
10	1728	11	4917	12	PB-LTG		

~~**Cable/Ckt #:** UP103-3 **Reference:** E-71~~
~~**Function:** 120 V Power **Conductor Type:** 2 + 1 Gnd, #12, #12, 600 V, RHH/RHW insulation~~
~~**From:** 208/120 V Utility Panel UP-103 **To:** PB-LTG (South Barrier)~~
~~**Remarks:** For receptacle near Light Pole (south WB)~~
~~**Description Of Changes:**~~

Route	Conduit No.	Route	Conduit No.	Route	Conduit No.	Route	Conduit No.
1	4051	2	Wireway #3W	3	4981	4	E. Vault #3W
5	1T23W	6	4999	7	1722	8	1723
9	1724	10	1725	11	1727	12	1721

Cable/Ckt #: UP103-5 **Reference:** E-71
Function: 120 V Power **Conductor Type:** 2 + 1 Gnd, #12, #12, 600 V, RHH/RHW insulation
From: 208/120 V Utility Panel UP-103 **To:** GFI Receptacles (Platform #3W)
Remarks:
Description Of Changes:

Route	Conduit No.	Route	Conduit No.	Route	Conduit No.	Route	Conduit No.
1	4052	2	Wireway #3W	3	Receptacle		

5

Cable/Ckt #: UP103-9 **Reference:** E-71, E-141
Function: 120 V Power **Conductor Type:** 1-2/C + Gnd, #12, 600 V, EPR insulation
From: 208/120 V Utility Panel UP-103 **To:** Remote Terminal Unit RTU #9W
Remarks:
Description Of Changes:

Route	Conduit No.	Route	Conduit No.	Route	Conduit No.	Route	Conduit No.
1	UP-103	2	4053	3	Wireway #3W	4	78 mm Nipple
5	RTU #9W						

Cable/Ckt #: UP109-1 **Reference:** E-72
Function: 120/240 V Power **Conductor Type:** 3 + 1 Gnd, #2, #6, 600 V, RHH/RHW insulation
From: 120/240 V Panel UP-109 **To:** TOS Sign CMS-W01
Remarks:
Description Of Changes:

Route	Conduit No.	Route	Conduit No.	Route	Conduit No.	Route	Conduit No.
1	4060	2	Wireway #3W	3	4982	4	E. Vault #3W
5	4971						

Cable/Ckt #: UP109-2 **Reference:** E-72
Function: 120 V Power **Conductor Type:** 2-1/C #10, 600 V, RHH/RHW insulation
From: 120/240 V Panel UP-109 **To:** TOS Sign CMS-W01
Remarks:
Description Of Changes:

Route	Conduit No.	Route	Conduit No.	Route	Conduit No.	Route	Conduit No.
1	4060	2	Wireway #3W	3	4982	4	E. Vault #3W
5	4971						

5 **REVISED PER ADDENDUM No. 5 DATED JULY 30, 2009**

CABLE AND CIRCUIT SCHEDULE

E-394

REVISED BY	DATE REVISED
CARMELO RIVERA	ELLERY LUCAS
CALCULATED-DESIGNED BY	CHECKED BY
CONSULTANT FUNCTIONAL SUPERVISOR	BEHZAD GOLEMOHAMMADI

STATE OF CALIFORNIA - DEPARTMENT OF TRANSPORTATION
Caltrans

LAST REVISION 00-00-00 DATE PLOTTED => 28-JUL-2009 TIME PLOTTED => 06:56

Dist	COUNTY	ROUTE	KILOMETER POST TOTAL PROJECT	SHEET No.	TOTAL SHEETS
04	SF	80	12.7/13.2	514	806

6/25/08
REGISTERED ELECTRICAL ENGINEER

6-23-08
PLANS APPROVAL DATE

REGISTERED PROFESSIONAL ENGINEER FADI WALIEDDINE No. 11465 Exp. 12/31/09 ELECTRICAL STATE OF CALIFORNIA

THE STATE OF CALIFORNIA OR ITS OFFICERS OR AGENTS SHALL NOT BE RESPONSIBLE FOR THE ACCURACY OR COMPLETENESS OF ELECTRONIC COPIES OF THIS PLAN SHEET.

PB AMERICAS, Inc.
A Parsons Brinckerhoff Company
303 Second St., Suite 700N
San Francisco, CA 94107-1317

Cable/Ckt #: UP201-10 | Reference: E-111
Function: 120 V Power | Conductor Type: 2 + 1 Gnd, #12, #12, 600 V, RHH/RHW insulation
From: 208/120 V Utility Panel UP-201 | To: Controller Cabinet #TOS-01EA
Remarks:
Description Of Changes:

Route	Conduit No.	Route	Conduit No.	Route	Conduit No.	Route	Conduit No.
1	UP-201	2	5043	3	Wireway #1E	4	78 mm Nipple
5	TOS-01EA						

~~Cable/Ckt #: UP201-12 | Reference: E-111, E-171~~
~~Function: 120 V Power | Conductor Type: 2 + 1 Gnd, #12, #12, 600 V, RHH/RHW insulation~~
~~From: 208/ 120 V Utility Panel UP-201 | To: PB-LTG at CB-239A/B, CB-238A/B~~
~~Remarks: Coil 2 meters of cable inside PB-LTG.~~
~~Description Of Changes:~~

Route	Conduit No.	Route	Conduit No.	Route	Conduit No.	Route	Conduit No.
1	5043	2	Wireway #1E	3	5919	4	E. Vault #1E
5	5987	6	PB-LTG	7	7110	8	2304
9	PB-LTG	10	5914	11	2706	12	2705
13	2704	14	PB-LTG				

Cable/Ckt #: UP201-5 | Reference: E-111, E-166
Function: 120 V Power | Conductor Type: 2 + 1 Gnd, #12, #12, 600 V, RHH/RHW insulation
From: 208/120 V Utility Panel UP-201 | To: GFI Receptacles (Platform #1E)
Remarks:
Description Of Changes:

Route	Conduit No.	Route	Conduit No.	Route	Conduit No.	Route	Conduit No.
1	UP-201	2	5043	3	Wireway #1E		

Cable/Ckt #: UP201-7 | Reference: E-111, E-166
Function: 120 V Power | Conductor Type: 1-3/C #12, 600 V, EPR insulation
From: 208/120 V Utility Panel UP-201 | To: Strong Motion Recorder #1
Remarks:
Description Of Changes:

Route	Conduit No.	Route	Conduit No.	Route	Conduit No.	Route	Conduit No.
1	UP-201	2	5043	3	Wireway #1E	4	78 mm Nipple

5

Cable/Ckt #: UP202-1 | Reference: E-111
Function: 120 V Power | Conductor Type: 2 + 1 Gnd, #10, #10, 600 V, RHH/RHW insulation
From: 208/120 V Utility Panel UP-202 | To: PB-LTG (North Barrier)
Remarks: For receptacle near Light Pole & Platform #2E.
Description Of Changes:

Route	Conduit No.	Route	Conduit No.	Route	Conduit No.	Route	Conduit No.
1	UP-202	2	5021	3	Wireway #2E	4	5930
5	E. Vault #2E	6	5975	7	2314	8	2315
9	PB-LTG						

Cable/Ckt #: UP202-10 | Reference: E-111
Function: 120 V Power | Conductor Type: 2 + 1 Gnd, #10, #10, 600 V, RHH/RHW insulation
From: 208/120 V Utility Panel UP-202 | To: Controller Cabinet TOS-02EA
Remarks:
Description Of Changes:

Route	Conduit No.	Route	Conduit No.	Route	Conduit No.	Route	Conduit No.
1	UP-202	2	5021	3	Wireway #2E	5	TOS-02EA

~~Cable/Ckt #: UP202-12 | Reference: E-111~~
~~Function: 120 V Power | Conductor Type: 3 + 1 Gnd, #12, #12, 600 V, RHH/RHW insulation~~
~~From: 208/120 V Utility Panel UP-202 | To: CB-238C, CB-239C, CB-240~~
~~Remarks: Coil Circuit in PB-LTG (after conduit # 2827) for future extension to CB-238C and CB-239C. Splice circuit in PB-LTG after conduit 5929.~~
~~Description Of Changes:~~

Route	Conduit No.	Route	Conduit No.	Route	Conduit No.	Route	Conduit No.
1	5021	2	Wireway #2E	3	5930	4	5929
5	Splice	6	2834	7	2833	8	7208
9	2832	10	2831	11	2830	12	2829
13	2828	14	2827	21	PB-LTG	22	2826
23	2835	24	2836	25	CB-240		

5 **REVISED PER ADDENDUM No. 5 DATED JULY 30, 2009**

CABLE AND CIRCUIT SCHEDULE

E-395

REVISED BY | DATE REVISED
CARMELO RIVERA | ELLERY LUCAS
CALCULATED-DESIGNED BY | CHECKED BY
CONSULTANT FUNCTIONAL SUPERVISOR
BEHZAD GOLEMOHAMMADI
STATE OF CALIFORNIA - DEPARTMENT OF TRANSPORTATION
Caltrans

LAST REVISION 00-00-00 | DATE PLOTTED => 28-JUL-2009 | TIME PLOTTED => 06:56

Dist	COUNTY	ROUTE	KILOMETER POST TOTAL PROJECT	SHEET No.	TOTAL SHEETS
04	SF	80	12.7/13.2	515	806

Caltrans Metric

6/25/08
REGISTERED ELECTRICAL ENGINEER

6-23-08
PLANS APPROVAL DATE

REGISTERED PROFESSIONAL ENGINEER FADI WALIEDDINE No. 11465 Exp. 12/31/09 ELECTRICAL STATE OF CALIFORNIA

THE STATE OF CALIFORNIA OR ITS OFFICERS OR AGENTS SHALL NOT BE RESPONSIBLE FOR THE ACCURACY OR COMPLETENESS OF ELECTRONIC COPIES OF THIS PLAN SHEET.

PB AMERICAS, Inc.
A Parsons Brinckerhoff Company
303 Second St., Suite 700N
San Francisco, CA 94107-1317

Cable/Ckt #: UP202-5 | Reference: E-111
Function: 120 V Power | Conductor Type: 2 + 1 Gnd, #12, #12, 600 V, RHH/RHW insulation
From: 208/120 V Utility Panel UP-202 | To: GFI Receptacles (Platform #2E)
Remarks:
Description Of Changes:

Route	Conduit No.	Route	Conduit No.	Route	Conduit No.	Route	Conduit No.
1	UP-202	2	5021	3	Wireway #2E		

5

~~Cable/Ckt #: UP202-8 | Reference: E-111~~
~~Function: 120 V Power | Conductor Type: 2 + 1 Gnd, #10, #10, 600 V, RHH/RHW insulation~~
~~From: 208/120 V Utility Panel UP-202 | To: Manhole-29~~
~~Remarks: Coil circuit in UP-202 & MH-29. This circuit is for TOS-RM01.~~
~~Description Of Changes:~~

Route	Conduit No.	Route	Conduit No.	Route	Conduit No.	Route	Conduit No.
1	UP-202	2	5021	3	Wireway #2E	4	5931
5	2T22E	6	E.Vault #2E	7	5901	8	PB-2A
9	5901A	10	E. Vault #1E	11	2T21E	12	5908
13	MH-29						

Cable/Ckt #: UP203-1 | Reference: E-112
Function: 120 V Power | Conductor Type: 2 + 1 Gnd, #10, #10, 600 V, RHH/RHW insulation
From: 208/120 V Utility Panel UP-203 | To: PB-LTG EB (North Barrier)
Remarks:
Description Of Changes:

Route	Conduit No.	Route	Conduit No.	Route	Conduit No.	Route	Conduit No.
1	UP-203	2	5579	3	Wireway #3E	4	5950
5	E. Vault #3E	6	5962	7	2321	8	2322
9	2323						

Cable/Ckt #: UP203-11 | Reference: E-112, E-142
Function: 120 V Power | Conductor Type: 1-2/C + Gnd, #12, 600 V, EPR insulation
From: 208/120 V Utility Panel UP-203 | To: Remote Terminal Unit RTU #9E
Remarks:
Description Of Changes:

Route	Conduit No.	Route	Conduit No.	Route	Conduit No.	Route	Conduit No.
1	5579	2	Wireway #3E	3	78 mm Nipple		

~~Cable/Ckt #: UP203-2 | Reference: E-112, E-171~~
~~Function: 120 V Power | Conductor Type: 2 + 1 Gnd, #12, #12, 600 V, RHH/RHW insulation~~
~~From: 208/120 V Utility Panel UP-203 | To: CB-241A/B~~
~~Remarks: Splice in PB-LTG.~~
~~Description Of Changes:~~

Route	Conduit No.	Route	Conduit No.	Route	Conduit No.	Route	Conduit No.
1	UP-203	2	5060	3	Wireway #3E	4	5951
5	E. Vault #3E	6	2T23E	7	5989	8	2321
9	2322	10	2323	11	2324	12	5966

Cable/Ckt #: UP203-5 | Reference: E-112
Function: 120 V Power | Conductor Type: 2 + 1 Gnd, #12, #12, 600 V, RHH/RHW insulation
From: 208/120 V Utility Panel UP-203 | To: GFI Receptacles (Platform #3E)
Remarks:
Description Of Changes:

Route	Conduit No.	Route	Conduit No.	Route	Conduit No.	Route	Conduit No.
1	UP-203	2	5579	3	Wireway #3E		

Cable/Ckt #: UP203-9 | Reference: E-112, E-142
Function: 120 V Power | Conductor Type: 1-2/C + Gnd, #12, 600 V, EPR insulation
From: 208/120 V Utility Panel UP-203 | To: Remote Terminal Unit RTU #9E
Remarks:
Description Of Changes:

Route	Conduit No.	Route	Conduit No.	Route	Conduit No.	Route	Conduit No.
1	5579	2	Wireway #3E	3	78 mm Nipple		

5 **REVISED PER ADDENDUM No. 5 DATED JULY 30, 2009**

CABLE AND CIRCUIT SCHEDULE

E-396

REVISED BY | DATE REVISED
CARMELO RIVERA | ELLERY LUCAS
CALCULATED-DESIGNED BY | CHECKED BY
CONSULTANT FUNCTIONAL SUPERVISOR: BEHZAD GOLEMOHAMMADI
STATE OF CALIFORNIA - DEPARTMENT OF TRANSPORTATION
Caltrans

LAST REVISION 00-00-00 | DATE PLOTTED => 28-JUL-2009 | TIME PLOTTED => 06:56

Dist	COUNTY	ROUTE	KILOMETER POST TOTAL PROJECT	SHEET No.	TOTAL SHEETS
04	SF	80	12.7/13.2	516A	806

4/10/09
REGISTERED ELECTRICAL ENGINEER

PLANS APPROVAL DATE

REGISTERED PROFESSIONAL ENGINEER
FADI WALIEDDINE
No. 11465
Exp. 12/31/09
ELECTRICAL
STATE OF CALIFORNIA

THE STATE OF CALIFORNIA OR ITS OFFICERS OR AGENTS SHALL NOT BE RESPONSIBLE FOR THE ACCURACY OR COMPLETENESS OF ELECTRONIC COPIES OF THIS PLAN SHEET.

PB AMERICAS, Inc.
A Parsons Brinckerhoff Company
303 Second St., Suite 700N
San Francisco, CA 94107-1317

Caltrans Metric

5

Cable/Ckt #: 1091-1
Reference: E-70
Function: 480 V Feeder
Conductor Type: 1-3/C + Gnd, #6, 600 V, EPR insulation
From: 15 KVA Transformer for UP-101
To: 480 V Breaker for UP-101
Remarks:
Description Of Changes:

Route	Conduit No.	Route	Conduit No.	Route	Conduit No.	Route	Conduit No.
1	5907						

Cable/Ckt #: 1092
Reference: E-40, E-70
Function: 480 V Feeder
Conductor Type: 1-3/C + Gnd, #4, 600 V, EPR insulation
From: (E) 480 V LVCC-A Cubicle #13B
To: 480 V Breaker for UP-102
Remarks:
Description Of Changes:

Route	Conduit No.	Route	Conduit No.	Route	Conduit No.	Route	Conduit No.
1	036	2	T20	3	600 V PB	4	0126
5	MH-5	6	0170	7	MH-7	8	0228
9	MH-30	10	4212	11	E. Vault #1W	12	1T21W
13	4903	14	PB-2E	15	4930	16	E. Vault #2W
17	1T22W	18	4963	19	Wireway #2W	20	5972A

Cable/Ckt #: 1092-1
Reference: E-70
Function: 480 V Feeder
Conductor Type: 1-3/C + Gnd, #6, 600 V, EPR insulation
From: 480 V Breaker for UP-102
To: 15 kVA Transformer for UP-102
Remarks:
Description Of Changes:

Route	Conduit No.	Route	Conduit No.	Route	Conduit No.	Route	Conduit No.
1	5972	2	Wireway #2W	3	5974		

Cable/Ckt #: 1093
Reference: E-40, E-71
Function: 480 V Feeder
Conductor Type: 1-3/C + Gnd, #4, 600 V, EPR insulation
From: (E) 480 V LVCC-A Cubicle #14A
To: 480 V Breaker for UP-103
Remarks:
Description Of Changes:

Route	Conduit No.	Route	Conduit No.	Route	Conduit No.	Route	Conduit No.
1	036	2	T20	3	600 V PB	4	0126
5	MH-5	6	0170	7	MH-7	8	0228
9	MH-30	10	4212	11	E. Vault #1W	12	1T21W
13	4903	14	PB-2E	15	4930	16	E. Vault #2W
17	1T22W	18	4957	19	E. Vault #3W	20	1T23W
21	4983	22	Wireway 3W	23	5992		

Cable/Ckt #: 1093-1
Reference: E-71
Function: 480 V Feeder
Conductor Type: 1-3/C + Gnd, #6, 600 V, EPR insulation
From: 480 V Breaker for UP-103
To: 15 KVA Transformer for UP-103
Remarks:
Description Of Changes:

Route	Conduit No.	Route	Conduit No.	Route	Conduit No.	Route	Conduit No.
1	5991						

Cable/Ckt #: 1115
Reference: E-40
Function: 480 V Power
Conductor Type: 1-3/C + Gnd, #1/0, 600 V, EPR insulation
From: (E) 480 V LVCC-A Cubicle #9
To: (E) Manhole-25
Remarks: Splice cable to (E) cable inside MH. The same circuit number installed on previous contract.
Description Of Changes:

Route	Conduit No.	Route	Conduit No.	Route	Conduit No.	Route	Conduit No.
1	0132	2	MH-5	3	0164	4	MH-7
5	0206	6	MH-10	7	0303	8	MH-13
9	0353	10	*0353	11	MH-16	12	0403
13	MH-19	14	0453	15	*0503	15	MH-22
16	0503	18	MH-25				

5 **ADDED PER ADDENDUM No. 5 DATED JULY 30, 2009**

CABLE AND CIRCUIT SCHEDULE

E-397A

REVISED BY | DATE REVISED
JEFFRI HALIM | ELLERY LUCAS
CALCULATED-DESIGNED BY | CHECKED BY
CONSULTANT FUNCTIONAL SUPERVISOR
BEHZAD GOLEMOHAMMADI
STATE OF CALIFORNIA - DEPARTMENT OF TRANSPORTATION
Caltrans

LAST REVISION 00-00-00
DATE PLOTTED => 28-JUL-2009
TIME PLOTTED => 06:57

Dist	COUNTY	ROUTE	KILOMETER POST TOTAL PROJECT	SHEET No.	TOTAL SHEETS
04	SF	80	12.7/13.2	516B	806

Caltrans Metric

4/10/09
REGISTERED ELECTRICAL ENGINEER

6-23-08
PLANS APPROVAL DATE

REGISTERED PROFESSIONAL ENGINEER
FADI WALIEDDINE
No. 11465
Exp. 12/31/09
ELECTRICAL
STATE OF CALIFORNIA

THE STATE OF CALIFORNIA OR ITS OFFICERS OR AGENTS SHALL NOT BE RESPONSIBLE FOR THE ACCURACY OR COMPLETENESS OF ELECTRONIC COPIES OF THIS PLAN SHEET.

PB AMERICAS, Inc.
A Parsons Brinckerhoff Company
303 Second St., Suite 700N
San Francisco, CA 94107-1317

5

Cable/Ckt #: 1117 — Reference: E-40
Function: 480 V Power — Conductor Type: 1-3/C + Gnd, #2/0, 600 V, EPR insulation
From: (E) 480 V LVCC-A Cubicle #10 — To: (E) Manhole-25
Remarks: Splice cable to (E) cable inside MH. The same circuit number installed on previous contract.
Description Of Changes:

Route	Conduit No.	Route	Conduit No.	Route	Conduit No.	Route	Conduit No.
1	0132	2	MH-5	3	0164	4	MH-7
5	0206	6	MH-10	7	0303	8	MH-13
9	0353	10	*0353	11	MH-16	12	0403
13	MH-19	14	0453	15	MH-22	16	*0503
17	0503	18	MH-25				

Cable/Ckt #: 1118 — Reference: E-40
Function: 480 V Power — Conductor Type: 1-3/C + Gnd, #2/0, 600 V, EPR insulation
From: (E) 480 V LVCC-A Cubicle #11 — To: (E) Manhole-25
Remarks: Splice cable to (E) cable inside MH. The same circuit number installed on previous contract.
Description Of Changes:

Route	Conduit No.	Route	Conduit No.	Route	Conduit No.	Route	Conduit No.
1	0132	2	MH-5	3	0164	4	MH-7
5	0206	6	MH-10	7	0303	8	MH-13
9	0353	10	*0353	11	MH-16	12	0403
13	MH-19	14	0453	15	MH-22	16	*0503
17	0503	18	MH-25				

Cable/Ckt #: 1148 — Reference: E-141, E-170
Function: Scada Data Com — Conductor Type: 1 - 2 pair, shielded #18 with IS/OA, 600 V, PVC jacket
From: Remote Terminal Unit RTU #9W — To: Call Box CB-139B
Remarks:
Description Of Changes:

Route	Conduit No.	Route	Conduit No.	Route	Conduit No.	Route	Conduit No.
1	RTU #9W	2	4068	3	PB-2B	4	4059
5	1T43W	6	TC Vault 3W	7	9015	8	1T42W
9	TC Vault #2W	10	4948	11	PB-2A	12	4906
13	1T41W	14	TC Vault #1W	15	4926	16	4009
17	1511	18	CB-139B				

Cable/Ckt #: 1474-4 — Reference: E-138
Function: Scada Data Com — Conductor Type: 50 pair #18, shielded pairs, IS/OS shield 600 V, XLPE insul., PVC jacket
From: (E) Scada Com. Terminal Box COM-YBI — To: (E) Manhole-27
Remarks: Splice cable to (E) cable inside MH. The same circuit number installed on previous contract.
Description Of Changes:

Route	Conduit No.	Route	Conduit No.	Route	Conduit No.	Route	Conduit No.
1	261	2	TOS/COM PB	3	0097	4	MH-4
5	0184	6	MH-9	7	0262	8	MH-12
9	0312	10	MH-15	11	0362	12	*0362
13	MH-18	14	0412	15	MH-21	16	0462
17	MH-24	18	*0512	19	0512	20	MH-27

Cable/Ckt #: 2096 — Reference: E-43
Function: 480 V Feeder — Conductor Type: 1-3/C + Gnd, #2, 600 V, EPR insulation
From: (E) 480 V LVCC-B Cubicle #13B — To: (E) Manhole-25
Remarks: Splice cable to (E) cable inside MH. The same circuit number installed on previous contract. (For UP-205).
Description Of Changes:

Route	Conduit No.	Route	Conduit No.	Route	Conduit No.	Route	Conduit No.
1	089	2	T21	3	T20	4	600 V PB
5	*0082	6	0082	7	MH-7	8	0234
9	MH-10	10	0330	11	MH-13	12	0380
13	*0380	14	MH-16	15	0430	16	MH-19
17	0480	18	MH-22	19	*0530	20	0530
21	MH-25						

5 **ADDED PER ADDENDUM No. 5 DATED JULY 30, 2009**

CABLE AND CIRCUIT SCHEDULE

E-397B

REVISED BY | DATE REVISED
JEFFRI HALIM | ELLERY LUCAS
CALCULATED-DESIGNED BY | CHECKED BY
CONSULTANT FUNCTIONAL SUPERVISOR
BEHZAD GOLEMOHAMMADI
STATE OF CALIFORNIA - DEPARTMENT OF TRANSPORTATION
Caltrans

LAST REVISION 00-00-00 | DATE PLOTTED => 28-JUL-2009 | TIME PLOTTED => 06:57

Dist	COUNTY	ROUTE	KILOMETER POST TOTAL PROJECT	SHEET No.	TOTAL SHEETS
04	SF	80	12.7/13.2	516C	806

Caltrans Metric

4/10/09
REGISTERED ELECTRICAL ENGINEER

6-23-08
PLANS APPROVAL DATE

REGISTERED PROFESSIONAL ENGINEER
FADI WALIEDDINE
No. 11465
Exp. 12/31/09
ELECTRICAL
STATE OF CALIFORNIA

THE STATE OF CALIFORNIA OR ITS OFFICERS OR AGENTS SHALL NOT BE RESPONSIBLE FOR THE ACCURACY OR COMPLETENESS OF ELECTRONIC COPIES OF THIS PLAN SHEET.

PB AMERICAS, Inc.
A Parsons Brinckerhoff Company
303 Second St., Suite 700N
San Francisco, CA 94107-1317

5

Cable/Ckt #: 2125
Reference: E-43
Function: 480 V Power
Conductor Type: 3 + 1 Gnd, 250 kcmil, #1/0, 600 V, RHH/RHW insulation
From: (E) 480 V LVCC-B Cubicle # 7B
To: (E) Manhole-25
Remarks: Splice cable to (E) cable inside MH. The same circuit number installed on previous contract.
Description Of Changes:

Route	Conduit No.	Route	Conduit No.	Route	Conduit No.	Route	Conduit No.
1	0136	2	MH-5	3	0156	4	MH-7
5	0221	6	MH-10	7	0319	8	MH-13
9	0369	10	*0369	11	MH-16	12	0419
13	MH-19	14	0469	15	MH-22	16	*0519
17	0519	18	MH-25				

Cable/Ckt #: 2143
Reference: E-171, E-142
Function: Low Level Signal
Conductor Type: 1 - 2 pair, shielded #18 with IS/OA, 600 V, PVC jacket
From: Remote Terminal Unit RTU #9E
To: Call Box CB-239A
Remarks:
Description Of Changes:

Route	Conduit No.	Route	Conduit No.	Route	Conduit No.	Route	Conduit No.
1	RTU #9E	2	5072	3	PB-2B	4	5955
5	TC Vault #3E	6	2T43E	7	5944	8	TC Vault #2E
9	2T42E	10	5922A	11	PB-2E	12	5922
13	TC Vault #1E	14	2T41E	15	5925	16	CB-239A

Cable/Ckt #: 2170
Reference: E-171, E-142
Function: Low Level Signal
Conductor Type: 1 - 2 pair, shielded #18 with IS/OA, 600 V, PVC jacket
From: Remote Terminal Unit RTU #9E
To: Call Box CB-239B
Remarks:
Description Of Changes:

Route	Conduit No.	Route	Conduit No.	Route	Conduit No.	Route	Conduit No.
1	RTU #9E	2	5072	3	PB-2B	4	5955
5	TC Vault 3E	6	2T43E	7	5944	8	TC Vault #2E
9	2T42E	10	5922A	11	PB-2E	12	5922
13	TC Vault #1E	14	2T41E	15	5925	16	2100
17	5969	18	2500	19	CB-239B		

Cable/Ckt #: 2474-3
Reference: E-138, E-143
Function: Scada Data Com
Conductor Type: 50 pair #18, shielded pairs, IS/OS shield 600 V, XLPE insul., PVC jacket
From: Scada Com. Terminal Box COM-2E
To: Scada Com. Terminal Box COM-3E
Remarks:
Description Of Changes:

Route	Conduit No.	Route	Conduit No.	Route	Conduit No.	Route	Conduit No.
1	5025	2	TC Vault #2E	3	2T42E	4	5944
5	TC Vault #3E	6	2T43E	7	5580		

Cable/Ckt #: 2475-2
Reference: E-153
Function: TOS Data Com
Conductor Type: 72 Fiber, single mode fiber optic riser cable
From: Controller Cabinet TOS-01EW
To: Splice Cabinet TOS-02ES
Remarks:
Description Of Changes:

Route	Conduit No.	Route	Conduit No.	Route	Conduit No.	Route	Conduit No.
1	TOS-01EW	2	5906	3	2T41E	4	TC Vault #1E
5	5923	6	PB-2E	7	5923A	8	2T42E
9	TC Vault #2E	10	5564	11	TOS-02ES		

Cable/Ckt #: 2475-3
Reference: E-153
Function: TOS Data Com
Conductor Type: 72 Fiber, single mode fiber optic riser cable
From: Splice Cabinet TOS-02ES
To: Splice Cabinet TOS-03ES
Remarks:
Description Of Changes:

Route	Conduit No.	Route	Conduit No.	Route	Conduit No.	Route	Conduit No.
1	TOS-02ES	2	5564	3	2T42E	4	TC Vault #2E
5	5945	6	TC Vault #3E	7	2T43E	8	5956
9	TOS-03ES						

5 **ADDED PER ADDENDUM No. 5 DATED JULY 30, 2009**

CABLE AND CIRCUIT SCHEDULE

E-397C

REVISED BY | DATE REVISED
JEFFRI HALIM | ELLERY LUCAS
CALCULATED-DESIGNED BY | CHECKED BY
CONSULTANT FUNCTIONAL SUPERVISOR
BEHZAD GOLEMOHAMMADI
STATE OF CALIFORNIA - DEPARTMENT OF TRANSPORTATION
Caltrans

LAST REVISION 00-00-00
DATE PLOTTED => 28-JUL-2009
TIME PLOTTED => 06:57

Dist	COUNTY	ROUTE	KILOMETER POST TOTAL PROJECT	SHEET No.	TOTAL SHEETS
04	SF	80	12.7/13.2	516D	806

Caltrans Metric

4/10/09
REGISTERED ELECTRICAL ENGINEER

6-23-08
PLANS APPROVAL DATE

REGISTERED PROFESSIONAL ENGINEER FADI WALIEDDINE No. 11465 Exp. 12/31/09 ELECTRICAL STATE OF CALIFORNIA

THE STATE OF CALIFORNIA OR ITS OFFICERS OR AGENTS SHALL NOT BE RESPONSIBLE FOR THE ACCURACY OR COMPLETENESS OF ELECTRONIC COPIES OF THIS PLAN SHEET.

PB AMERICAS, Inc.
A Parsons Brinckerhoff Company
303 Second St., Suite 700N
San Francisco, CA 94107-1317

5

Cable/Ckt #: 2475-4
Reference: E-153
Function: TOS Data Com
Conductor Type: 72 Fiber, single mode fiber optic riser cable
From: Splice Cabinet TOS-03ES
To: Fiber Splice Closure (FSC)
Remarks: Splice cable to (E) cable inside MH. The same circuit number installed on previous contract.
Description Of Changes:

Route	Conduit No.	Route	Conduit No.	Route	Conduit No.	Route	Conduit No.
1	TOS-03ES	2	5956	3	2T43E	4	TC Vault 3E
5	5945	6	TC Vault #2E	7	2T42E	8	5923A
9	PB-2E	10	5923	11	TC Vault #1E	12	2T41E
13	5912	14	MH-9	15	0260	16	MH-12
17	0310	18	MH-15	19	0360	20	*0360
21	MH-18	22	0410	23	MH-21	24	0460
25	MH-24	26	*0510	27	0510	28	MH-27

Cable/Ckt #: 2900-101A
Reference: E-165, E-166
Function: Low Level Signal
Conductor Type: 4 pair #22, shielded pairs, FEP insulation (Type SSC)
From: Sensor 10-1
To: Strong Motion Recorder #1
Remarks:
Description Of Changes:

Route	Conduit No.	Route	Conduit No.	Route	Conduit No.	Route	Conduit No.
1	9204	2	9234	3	9233	4	9232
5	9231	6	9230	7	TC Vault 3E	8	2T43E
9	9235	10	TC Vault #2E	11	2T42E	12	9236A
13	PB-2E	14	9236	15	TC Vault #1E	16	9217
17	PB-2B	18	9218	19	Recorder #1		

Cable/Ckt #: 2900-41A
Reference: E-165, E-166
Function: Low Level Signal
Conductor Type: 4 pair #22, shielded pairs, FEP insulation (Type SSC)
From: Sensor 4-1
To: Strong Motion Recorder #1
Remarks:
Description Of Changes:

Route	Conduit No.	Route	Conduit No.	Route	Conduit No.	Route	Conduit No.
1	9214	2	PB-SMD	3	9100	4	TC Vault #1W
5	1T41W	6	9101	7	MH-9	8	9201
9	TC Vault #1E	10	2T41E	11	9217	12	PB-2B
13	9218	14	Recorder #1				

Cable/Ckt #: 2900-41B
Reference: E-165, E-166
Function: Low Level Signal
Conductor Type: 4 pair #22, shielded pairs, FEP insulation (Type SSC)
From: Sensor 4-1
To: Strong Motion Recorder #1
Remarks:
Description Of Changes:

Route	Conduit No.	Route	Conduit No.	Route	Conduit No.	Route	Conduit No.
1	9214	2	PB-SMD	3	9100	4	TC Vault #1W
5	1T41W	6	9101	7	MH-9	8	9201
9	TC Vault #1E	10	2T41E	11	9217	12	PB-2B
13	9218	14	Recorder #1				

Cable/Ckt #: 2910-2
Reference: E-166, E-167
Function: 120 V DI
Conductor Type: 4 pair #24, overall shielded, 300 V, PE insulation (Type IC)
From: Strong Motion Recorder #1
To: 2910-2 Cable Splice MH-27
Remarks: Splice cable to (E) cable inside MH. The same circuit number installed on previous contract.
Description Of Changes:

Route	Conduit No.	Route	Conduit No.	Route	Conduit No.	Route	Conduit No.
1	9218	2	PB-2B	3	9217	4	TC Vault #1E
5	2T41E	6	9201	7	MH-9	8	0286
9	MH-12	10	0336	11	MH-15	12	0386
13	*0386	14	MH-18	15	0436	16	MH-21
17	0486	18	MH-24	19	*0536	20	0536
21	MH-27						

5 **ADDED PER ADDENDUM No. 5 DATED JULY 30, 2009**

CABLE AND CIRCUIT SCHEDULE

E-397D

REVISED BY | DATE REVISED
JEFFRI HALIM | ELLERY LUCAS
CALCULATED-DESIGNED BY | CHECKED BY
CONSULTANT FUNCTIONAL SUPERVISOR
BEHZAD GOLEMOHAMMADI
STATE OF CALIFORNIA - DEPARTMENT OF TRANSPORTATION
Caltrans

LAST REVISION 00-00-00 | DATE PLOTTED => 28-JUL-2009 | TIME PLOTTED => 06:57

Dist	COUNTY	ROUTE	KILOMETER POST TOTAL PROJECT	SHEET No.	TOTAL SHEETS
04	SF	80	12.7/13.2	516E	806

Caltrans Metric

4/10/09
REGISTERED ELECTRICAL ENGINEER

6-23-08
PLANS APPROVAL DATE

REGISTERED PROFESSIONAL ENGINEER FADI WALIEDDINE No. 11465 Exp. 12/31/09 ELECTRICAL STATE OF CALIFORNIA

THE STATE OF CALIFORNIA OR ITS OFFICERS OR AGENTS SHALL NOT BE RESPONSIBLE FOR THE ACCURACY OR COMPLETENESS OF ELECTRONIC COPIES OF THIS PLAN SHEET.

PB AMERICAS, Inc.
A Parsons Brinckerhoff Company
303 Second St., Suite 700N
San Francisco, CA 94107-1317

5

Cable/Ckt #: 2910-3
Reference: E-166, E-167
Function: Low Level Signal
Conductor Type: 4 pair #22, shielded pairs, FEP insulation (Type SSC)
From: Strong Motion Recorder #1
To: 2910-3 Cable Splice MH-27
Remarks: Splice cable to (E) cable inside MH. The same circuit number installed on previous contract.
Description Of Changes:

Route	Conduit No.	Route	Conduit No.	Route	Conduit No.	Route	Conduit No.
1	9218	2	PB-2B	3	9217	4	TC Vault #1E
5	2T41E	6	9201	7	MH-9	8	0286
9	MH-12	10	0336	11	MH-15	12	0386
13	*0386	14	MH-18	15	0436	16	MH-21
17	0486	18	MH-24	19	*0536	20	0536
21	MH-27						

Cable/Ckt #: A-1005-1
Reference: E-41, E-54
Function: 480 V Lighting
Conductor Type: 1-3/C + Gnd, #8, 600 V, EPR insulation
From: (E) 480 V LVCC-A cubicle #21
To: PB-LTG (Platform #1W)
Remarks:
Description Of Changes:

Route	Conduit No.	Route	Conduit No.	Route	Conduit No.	Route	Conduit No.
1	041	2	T20	3	600 V PB	4	0124
5	MH-5	6	0168	7	MH-7	8	0226
9	MH-30	10	4211	11	E. Vault #1W	12	1T21W
13	4018						

Cable/Ckt #: A-1006-1
Reference: E-41, E-55
Function: 480 V Lighting
Conductor Type: 1-3/C + Gnd, #8, 600 V, EPR insulation
From: (E) 480 V LVCC-A cubicle #26
To: PB-2J (Loc. Electrical Vault #2W)
Remarks: Splice cables A-1006-2 and A-1006-3. (Multi-conductor to single conductor).
Description Of Changes:

Route	Conduit No.	Route	Conduit No.	Route	Conduit No.	Route	Conduit No.
1	041	2	T20	3	600 V PB	4	0124
5	MH-5	6	0168	7	MH-7	8	0226
9	MH-30	10	4211	11	E. Vault #1W	12	1T21W
13	4901	14	PB-2E	15	4928	16	E. Vault #2W
17	1T22W	18	4914	19	PB-2J		

Cable/Ckt #: A-1007-1
Reference: E-41, E-77
Function: 480 V Lighting
Conductor Type: 1-3/C + Gnd, #4, 600 V, EPR insulation
From: (E) 480 V LVCC-A cubicle #22
To: PB-LTG (Bent W4L)
Remarks:
Description Of Changes:

Route	Conduit No.	Route	Conduit No.	Route	Conduit No.	Route	Conduit No.
1	041	2	T20	3	600 V PB	4	0124
5	MH-5	6	0168	7	MH-7	8	0226
9	MH-30	10	4212	11	E. Vault #1W	12	1T21W
13	4901	14	PB-2E	15	4928	16	E. Vault #2W
17	1T22W	18	4956	19	E. Vault #3W	20	1T23W
21	4919	22	PB-LTG				

Cable/Ckt #: A-1009-2
Reference: E-77A
Function: 480 V Lighting
Conductor Type: 3 + 1 Gnd, #6, #8, 600 V, RHH/RHW insulation
From: PB-LTG (Bent W5L)
To: PB-LTG
Remarks:
Description Of Changes:

Route	Conduit No.	Route	Conduit No.	Route	Conduit No.	Route	Conduit No.
1	1424	2	1423	3	1422	4	1321
5	1320	6	1319	7	1318	8	1315
9	1313						

5 **ADDED PER ADDENDUM No. 5 DATED JULY 30, 2009**

CABLE AND CIRCUIT SCHEDULE

E-397E

REVISED BY | DATE REVISED
JEFFRI HALIM | ELLERY LUCAS
CALCULATED-DESIGNED BY | CHECKED BY
CONSULTANT FUNCTIONAL SUPERVISOR
BEHZAD GOLEMOHAMMADI
STATE OF CALIFORNIA - DEPARTMENT OF TRANSPORTATION
Caltrans

LAST REVISION 00-00-00 | DATE PLOTTED => 28-JUL-2009 | TIME PLOTTED => 06:57

Dist	COUNTY	ROUTE	KILOMETER POST TOTAL PROJECT	SHEET No.	TOTAL SHEETS
04	SF	80	12.7/13.2	516F	806

Caltrans Metric

4/10/09
REGISTERED ELECTRICAL ENGINEER

6-23-08
PLANS APPROVAL DATE

REGISTERED PROFESSIONAL ENGINEER
FADI WALIEDDINE
No. 11465
Exp. 12/31/09
ELECTRICAL
STATE OF CALIFORNIA

THE STATE OF CALIFORNIA OR ITS OFFICERS OR AGENTS SHALL NOT BE RESPONSIBLE FOR THE ACCURACY OR COMPLETENESS OF ELECTRONIC COPIES OF THIS PLAN SHEET.

PB AMERICAS, Inc.
A Parsons Brinckerhoff Company
303 Second St., Suite 700N
San Francisco, CA 94107-1317

5

Cable/Ckt #: A-1010-1
Reference: E-41, E-77A
Function: 480 V Lighting
Conductor Type: 1-3/C + Gnd, #6, 600 V, EPR insulation
From: (E) 480 V LVCC-A cubicle #18
To: PB-LTG (Bent W8L)
Remarks:
Description Of Changes:

Route	Conduit No.	Route	Conduit No.	Route	Conduit No.	Route	Conduit No.
1	041	2	T20	3	600 V PB	4	0124
5	MH-5	6	0169	7	MH-7	8	0227
9	MH-30	10	4910A	11	PB-LTG		

Cable/Ckt #: A-1010-2
Reference: E-77A
Function: 480 V Lighting
Conductor Type: 3 + 1 Gnd, #6, #8, 600 V, RHH/RHW insulation
From: PB-LTG (Bent W8L)
To: PB-LTG
Remarks:
Description Of Changes:

Route	Conduit No.	Route	Conduit No.	Route	Conduit No.	Route	Conduit No.
1	1305	2	1304	3	1303	4	1302
5	1301	6	1546				

Cable/Ckt #: A-2009-1
Reference: E-44, E-125
Function: 480 V Lighting
Conductor Type: 1-3/C + Gnd, #8, 600 V, EPR insulation
From: (E) 480 V LVCC-B Cubicle #18
To: PB-LTG (Bent W5R)
Remarks:
Description Of Changes:

Route	Conduit No.	Route	Conduit No.	Route	Conduit No.	Route	Conduit No.
1	094	2	T31	3	T30	4	600 V PB
5	0110	6	MH-5	7	0150	8	MH-7
9	0200	10	MH-29	11	5908	12	E. Vault #1E
13	2T21E	14	5901	15	PB-2A	16	5901A
17	E. Vault #2E	18	2T22E	19	5940	20	PB-LTG

Cable/Ckt #: A-2010-1
Reference: E-44, E-125A
Function: 480 V Lighting
Conductor Type: 1-3/C + Gnd, #8, 600 V, EPR insulation
From: (E) 480 V LVCC-B Cubicle #18
To: PB-LTG (Bent W8R)
Remarks:
Description Of Changes:

Route	Conduit No.	Route	Conduit No.	Route	Conduit No.	Route	Conduit No.
1	094	2	T31	3	T30	4	600 V PB
5	0111	6	MH-5	7	0151	8	MH-7
9	0201	10	MH-29	11	5908	12	E. Vault #1E
13	2T21E	14	5901	15	PB-2A	16	5901A
17	E. Vault #2E	18	2T22E	19	5929	20	PB-LTG

Cable/Ckt #: CMSE01
Reference: E-151, E-152
Function: Low Level Signal
Conductor Type: Harness #4
From: Controller Cabinet TOS-03EA
To: TOS Sign CMS-E01
Remarks:
Description Of Changes:

Route	Conduit No.	Route	Conduit No.	Route	Conduit No.	Route	Conduit No.
1	TOS-03EA	2	5033	3	PB-2B	4	5954
5	TC Vault 3E	6	2T43E	7	5959	8	CMS-E01

Cable/Ckt #: CMSE02
Reference: E-151, E-152
Function: Low Level Signal
Conductor Type: Harness #5
From: Controller Cabinet TOS-03EA
To: TOS Sign CMS-E01
Remarks:
Description Of Changes:

Route	Conduit No.	Route	Conduit No.	Route	Conduit No.	Route	Conduit No.
1	TOS-03EA	2	5033	3	PB-2B	4	5954
5	TC Vault 3E	6	2T43E	7	5959	8	CMS-E01

Cable/Ckt #: LP218-1,3,5A
Reference: E-97, E-116
Function: 120 V Lighting
Conductor Type: 4 + 1 Gnd, #10, #10, 600 V, RHH/RHW insulation
From: PB-LTG at 120 V Bike Path Ltg.
To: PB-1C
Remarks:
Description Of Changes:

Route	Conduit No.	Route	Conduit No.	Route	Conduit No.	Route	Conduit No.
1	PB-LTG	2	PB-1C				

5 **ADDED PER ADDENDUM No. 5 DATED JULY 30, 2009**

CABLE AND CIRCUIT SCHEDULE

E-397F

REVISED BY | DATE REVISED
JEFFRI HALIM | ELLERY LUCAS
CALCULATED-DESIGNED BY | CHECKED BY
CONSULTANT FUNCTIONAL SUPERVISOR
BEHZAD GOLEMOHAMMADI
STATE OF CALIFORNIA - DEPARTMENT OF TRANSPORTATION
Caltrans

LAST REVISION 00-00-00 | DATE PLOTTED => 28-JUL-2009 | TIME PLOTTED => 06:58

Dist	COUNTY	ROUTE	KILOMETER POST TOTAL PROJECT	SHEET No.	TOTAL SHEETS
04	SF	80	12.7/13.2	516G	806

Caltrans Metric

5

4/10/09
REGISTERED ELECTRICAL ENGINEER

6-23-08
PLANS APPROVAL DATE

REGISTERED PROFESSIONAL ENGINEER
FADI WALIEDDINE
No. 11465
Exp. 12/31/09
ELECTRICAL
STATE OF CALIFORNIA

THE STATE OF CALIFORNIA OR ITS OFFICERS OR AGENTS SHALL NOT BE RESPONSIBLE FOR THE ACCURACY OR COMPLETENESS OF ELECTRONIC COPIES OF THIS PLAN SHEET.

PB AMERICAS, Inc.
A Parsons Brinckerhoff Company
303 Second St., Suite 700N
San Francisco, CA 94107-1317

Cable/Ckt #: S-1001-2 | Reference: E-53
Function: 480 V Lighting | Conductor Type: 3 + 1 Gnd, #8, #10, 600 V, RHH/RHW insulation
From: Pull Box PB-LTG | To: Barrier pull Boxes PB-LTG
Remarks: For Light Poles S-1001-3 through S-1001-16.
Description Of Changes:

Route	Conduit No.	Route	Conduit No.	Route	Conduit No.	Route	Conduit No.
1	1306	2	1305	3	1304	4	1303
5	1302	6	1301	7	1546	8	1545
9	1547	10	1544	11	1543	12	1542
13	1541	14	1540	15	1778	16	1779
17	1612	18	1613				

Cable/Ckt #: S-1022-3 | Reference: E-55
Function: 480 V Lighting | Conductor Type: 1-3/C + Gnd, #8, 600 V, EPR insulation
From: PB-2J (Loc. Electrical Vault #1W) | To: PB-LTG (Platfrom #2W)
Remarks: Splice cable with S-1022-1 and S-1022-2. (Multi-conductor to single conductor).
Description Of Changes:

Route	Conduit No.	Route	Conduit No.	Route	Conduit No.	Route	Conduit No.
1	PB-2J	2	4016	3	1T21W	4	E. Vault #1W
5	4901	6	PB-2E	7	4928	8	E. Vault #2W
9	1T22W	10	4965	11	PB-LTG		

Cable/Ckt #: S-3022-1 | Reference: E-42
Function: 480 V Lighting | Conductor Type: 1-3/C + Gnd, #2, 600 V, EPR insulation
From: (E) 480 V LVCC-A Cubicle #63 | To: (E) Manhole-25
Remarks: Splice cable to (E) cable inside MH. The same circuit number installed on previous contract.
Description Of Changes:

Route	Conduit No.	Route	Conduit No.	Route	Conduit No.	Route	Conduit No.
1	067	2	T20	3	600 V PB	4	0115
5	MH-5	6	0155	7	MH-7	8	0207
9	MH-10	10	0304	11	MH-13	12	0354
13	*0354	14	MH-16	15	0404	16	MH-19
17	0454	18	MH-22	19	*0504	20	0504
21	MH-25						

Cable/Ckt #: S-3053-1 | Reference: E-45
Function: 480 V Lighting | Conductor Type: 1-3/C + Gnd, #2, 600 V, EPR insulation
From: (E) 480 V LVCC-B Cubicle #64 | To: (E) Manhole-25
Remarks: Splice cable to (E) cable inside MH. The same circuit number installed on previous contract.
Description Of Changes:

Route	Conduit No.	Route	Conduit No.	Route	Conduit No.	Route	Conduit No.
1	121	2	T31	3	T30	4	600 V PB
5	*0080	6	0080	7	MH-7	8	0232
9	MH-10	10	0328	11	MH-13	12	0378
13	*0378	14	MH-16	15	0428	16	MH-19
17	0478	18	MH-22	19	*0528	20	0528
21	MH-25						

Cable/Ckt #: S-3056-1 | Reference: E-42
Function: 480 V Lighting | Conductor Type: 1-3/C + Gnd, #6, 600 V, EPR insulation
From: (E) 480 V LVCC-A Cubicle #55 | To: (E) Manhole-25
Remarks: Splice cable to (E) cable inside MH. The same circuit number installed on previous contract.
Description Of Changes:

Route	Conduit No.	Route	Conduit No.	Route	Conduit No.	Route	Conduit No.
1	062	2	T20	3	600 V PB	4	0116
5	MH-5	6	0158	7	MH-7	8	0209
9	MH-10	10	0306	11	MH-13	12	0356
13	*0356	14	MH-16	15	0406	16	MH-19
17	0456	18	MH-22	19	*0506	20	0506
21	MH-25						

5 **ADDED PER ADDENDUM No. 5 DATED JULY 30, 2009**

CABLE AND CIRCUIT SCHEDULE

E-397G

REVISED BY | DATE REVISED
JEFFRI HALIM | ELLERY LUCAS
CALCULATED-DESIGNED BY | CHECKED BY
CONSULTANT FUNCTIONAL SUPERVISOR
BEHZAD GOLEMOHAMMADI
STATE OF CALIFORNIA - DEPARTMENT OF TRANSPORTATION
Caltrans

LAST REVISION 00-00-00 | DATE PLOTTED => 28-JUL-2009 | TIME PLOTTED => 06:58

Dist	COUNTY	ROUTE	KILOMETER POST TOTAL PROJECT	SHEET No.	TOTAL SHEETS
04	SF	80	12.7/13.2	516H	806

REGISTERED ELECTRICAL ENGINEER 4/10/09

6-23-08
PLANS APPROVAL DATE

REGISTERED PROFESSIONAL ENGINEER FADI WALIEDDINE No. 11465 Exp. 12/31/09 ELECTRICAL STATE OF CALIFORNIA

THE STATE OF CALIFORNIA OR ITS OFFICERS OR AGENTS SHALL NOT BE RESPONSIBLE FOR THE ACCURACY OR COMPLETENESS OF ELECTRONIC COPIES OF THIS PLAN SHEET.

PB AMERICAS, Inc.
A Parsons Brinckerhoff Company
303 Second St., Suite 700N
San Francisco, CA 94107-1317

Caltrans Metric

5

Cable/Ckt #: UP101-2A
Reference: E-70, E-170
Function: 120 V Power
Conductor Type: 3 + 1 Gnd, #12, #12, 600 V, RHH/RHW insulation
From: 208/120 V Utility Panel UP-101
To: CB-138B & CB-139B
Remarks: Coil cable inside PB-LTG route 16 for future extension to CB-138B. Splice circuit in PB-LTG route 5. On Route 4: Do not route cable inside Cable Tray.
Description Of Changes:

Route	Conduit No.	Route	Conduit No.	Route	Conduit No.	Route	Conduit No.
1	4002	2	Wireway #1W	3	4921	4	E. Vault #1W
5	4026	6	PB-LTG	7	1707	8	PB-LTG
9	CB-139B	10	1705	11	1704	12	1703
13	1702	14	1701	15	1776	16	PB-LTG

Cable/Ckt #: UP101-2B
Reference: E-70, E-170
Function: 120 V Power
Conductor Type: 3 + 1 Gnd, #12, #12, 600 V, RHH/RHW insulation
From: PB-LTG
To: CB-138A & CB-139A
Remarks: Coil cable inside PB-LTG route 10 for future extension to CB-138A.
Description Of Changes:

Route	Conduit No.	Route	Conduit No.	Route	Conduit No.	Route	Conduit No.
1	PB-LTG	2	4899	3	PB-LTG	4	1401
5	1646	6	1645	7	1647	8	1644
9	1643	10	PB-LTG	11	1302	12	1303
13	1304	14	1305	15	PB-LTG	16	CB-139A

Cable/Ckt #: UP102-3
Reference: E-70
Function: 120 V Power
Conductor Type: 2 + 1 Gnd, #12, #12, 600 V, RHH/RHW insulation
From: 208/120 V Utility Panel UP-102
To: Receptacle
Remarks:
Description Of Changes:

Route	Conduit No.	Route	Conduit No.	Route	Conduit No.	Route	Conduit No.
1	4021	2	Wireway #2W	3	4962	4	E. Vault #2W
5	4965	6	PB-LTG				

Cable/Ckt #: UP103-2
Reference: E-71, E-170
Function: 120 V Power
Conductor Type: 3 + 1 Gnd, #12, #12, 600 V, RHH/RHW insulation
From: 208/120 V Utility Panel UP-103
To: Call Box CB-140A/B
Remarks: Splice circuit in PB-LTG route 6. On Route 4: Do not route cable inside Cable Tray.
Description Of Changes:

Route	Conduit No.	Route	Conduit No.	Route	Conduit No.	Route	Conduit No.
1	4053	2	Wireway 3W	3	4981	4	E. Vault #3W
5	4999	6	PB-LTG	7	1722	8	1723
9	1724	10	1725	11	1727	12	1728
13	PB-LTG	14	CB-140B	15	4917	16	PB-LTG
17	CB-140A						

Cable/Ckt #: UP103-3
Reference: E-71
Function: 120 V Power
Conductor Type: 2 + 1 Gnd, #12, #12, 600 V, RHH/RHW insulation
From: 208/120 V Utility Panel UP-103
To: PB-LTG (South Barrier)
Remarks: For receptacle near Light Pole (south WB). On Route 4: Do not route cable inside Cable Tray.
Description Of Changes:

Route	Conduit No.	Route	Conduit No.	Route	Conduit No.	Route	Conduit No.
1	4051	2	Wireway 3W	3	4981	4	E. Vault #3W
5	4999	6	1722	7	1723	8	1724
9	1725	10	1727	11	1721		

Cable/Ckt #: UP201-12
Reference: E-111, E-171
Function: 120 V Power
Conductor Type: 2 + 1 Gnd, #12, #12, 600 V, RHH/RHW insulation
From: 208/ 120 V Utility Panel UP-201
To: Call Box CB-239 A/B & CB-238 A/B
Remarks: Coil cable inside PB-LTG route 11 and 18 for future extension to CB-238A/B. Splice circuit in PB-LTG route 5. On Route 4: Do not route cable inside Cable Tray.
Description Of Changes:

Route	Conduit No.	Route	Conduit No.	Route	Conduit No.	Route	Conduit No.
1	5043	2	Wireway #1E	3	5919	4	E. Vault #1E
5	5900	6	PB-LTG	7	7110	8	PB-LTG
9	CB-239A	10	2304	11	PB-LTG	12	5914
13	PB-LTG	14	CB-239B	15	2706	16	2705
17	2704	18	PB-LTG				

CABLE AND CIRCUIT SCHEDULE

5 ADDED PER ADDENDUM No. 5 DATED JULY 30, 2009

E-397H

REVISED BY | DATE REVISED
JEFFRI HALIM | ELLERY LUCAS
CALCULATED-DESIGNED BY | CHECKED BY
CONSULTANT FUNCTIONAL SUPERVISOR
BEHZAD GOLEMOHAMMADI
STATE OF CALIFORNIA - DEPARTMENT OF TRANSPORTATION
Caltrans

LAST REVISION 00-00-00 | DATE PLOTTED => 28-JUL-2009 | TIME PLOTTED => 06:58

Dist	COUNTY	ROUTE	KILOMETER POST TOTAL PROJECT	SHEET No.	TOTAL SHEETS
04	SF	80	12.7/13.2	516I	806

Caltrans Metric

5

4/10/09
REGISTERED ELECTRICAL ENGINEER

6-23-08
PLANS APPROVAL DATE

REGISTERED PROFESSIONAL ENGINEER
FADI WALIEDDINE
No. 11465
Exp. 12/31/09
ELECTRICAL
STATE OF CALIFORNIA

THE STATE OF CALIFORNIA OR ITS OFFICERS OR AGENTS SHALL NOT BE RESPONSIBLE FOR THE ACCURACY OR COMPLETENESS OF ELECTRONIC COPIES OF THIS PLAN SHEET.

PB AMERICAS, Inc.
A Parsons Brinckerhoff Company
303 Second St., Suite 700N
San Francisco, CA 94107-1317

Cable/Ckt #: UP202-12
Reference: E-111, E-171
Function: 120 V Power
Conductor Type: 3 + 1 Gnd, #12, #12, 600 V, RHH/RHW insulation
From: 208/120 V Utility Panel UP-202
To: CB-238C, CB-239C, CB-240B
Remarks: Coil cable inside PB-LTG route 16 for future extension to CB-238C and CB-239C. Splice circuit in PB-LTG route 6. On Route 4: Do not route cable inside Cable Tray.
Description Of Changes: Addendum #4. Miscellaneous design correction

Route	Conduit No.	Route	Conduit No.	Route	Conduit No.	Route	Conduit No.
1	5021	2	Wireway #2E	3	5930	4	E. Vault #2E
5	5929	6	PB-LTG	7	2834	8	2833
9	7208	10	2832	11	2831	12	2830
13	2829	14	2828	15	2827	16	PB-LTG
17	2826	18	2835	19	2836	20	PB-LTG
21	CB-240B						

Cable/Ckt #: UP202-8
Reference: E-111
Function: 120 V Power
Conductor Type: 2 + 1 Gnd, #10, #10, 600 V, RHH/RHW insulation
From: 208/120 V Utility Panel UP-202
To: Manhole-29
Remarks: Coil and isolate circuit in UP-202 & MH-29. This circuit is for future TOS-RM01. On Route 5 and 9: Do not route cable inside Cable Tray.
Description Of Changes: Addendum #4. Miscellaneous design correction

Route	Conduit No.	Route	Conduit No.	Route	Conduit No.	Route	Conduit No.
1	UP-202	2	5021	3	Wireway #2E	4	5931
5	E.Vault #2E	6	5901A	7	PB-2A	8	5901
9	E. Vault #1E	10	5908	11	MH-29		

Cable/Ckt #: UP203-2
Reference: E-112, E-171
Function: 120 V Power
Conductor Type: 2 + 1 Gnd, #12, #12, 600 V, RHH/RHW insulation
From: 208/120 V Utility Panel UP-203
To: CB-241A/B
Remarks: Splice circuit in PB-LTG route 6. On Route 5: Do not route cable inside Cable Tray.
Description Of Changes: Addendum #4. Miscellaneous design correction

Route	Conduit No.	Route	Conduit No.	Route	Conduit No.	Route	Conduit No.
1	UP-203	2	5060	3	Wireway #3E	4	5951
5	E. Vault #3E	6	5989	7	PB-LTG	8	2321
9	2322	10	2323	11	2324	12	PB-LTG
13	CB-241A	14	5966	15	PB-LTG	16	CB-241B

REVISED BY | DATE REVISED
JEFFRI HALIM | ELLERY LUCAS
CALCULATED-DESIGNED BY | CHECKED BY
CONSULTANT FUNCTIONAL SUPERVISOR
BEHZAD GOLEMOHAMMADI

STATE OF CALIFORNIA - DEPARTMENT OF TRANSPORTATION
Caltrans

CABLE AND CIRCUIT SCHEDULE

5 ADDED PER ADDENDUM No. 5 DATED JULY 30, 2009

E-397I

LAST REVISION 00-00-00 | DATE PLOTTED => 28-JUL-2009 | TIME PLOTTED => 06:58

5 REVISED PER ADDENDUM No. 5 DATED JULY 30, 2009

Caltrans Metric

DIST.	COUNTY	ROUTE	KILOMETER POST TOTAL PROJECT	SHEET NO.	TOTAL SHEETS
04	SF	80	12.7/13.2	550	806

REGISTERED ENGINEER - CIVIL

6-23-08
PLANS APPROVAL DATE

REGISTERED PROFESSIONAL ENGINEER A.L. ELY No. 18880 Exp. 6-30-11 CIVIL STATE OF CALIFORNIA

The State of California or its officers or agents shall not be responsible for the accuracy or completeness of electronic copies of this plan sheet.

T.Y. LIN / MOFFATT & NICHOL
TWO HARRISON STREET
SAN FRANCISCO, CA 94105

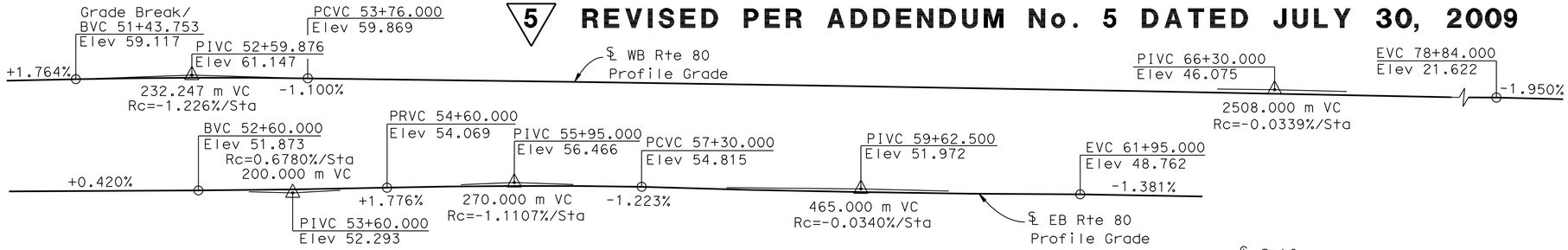

PROFILE GRADE
NO SCALE

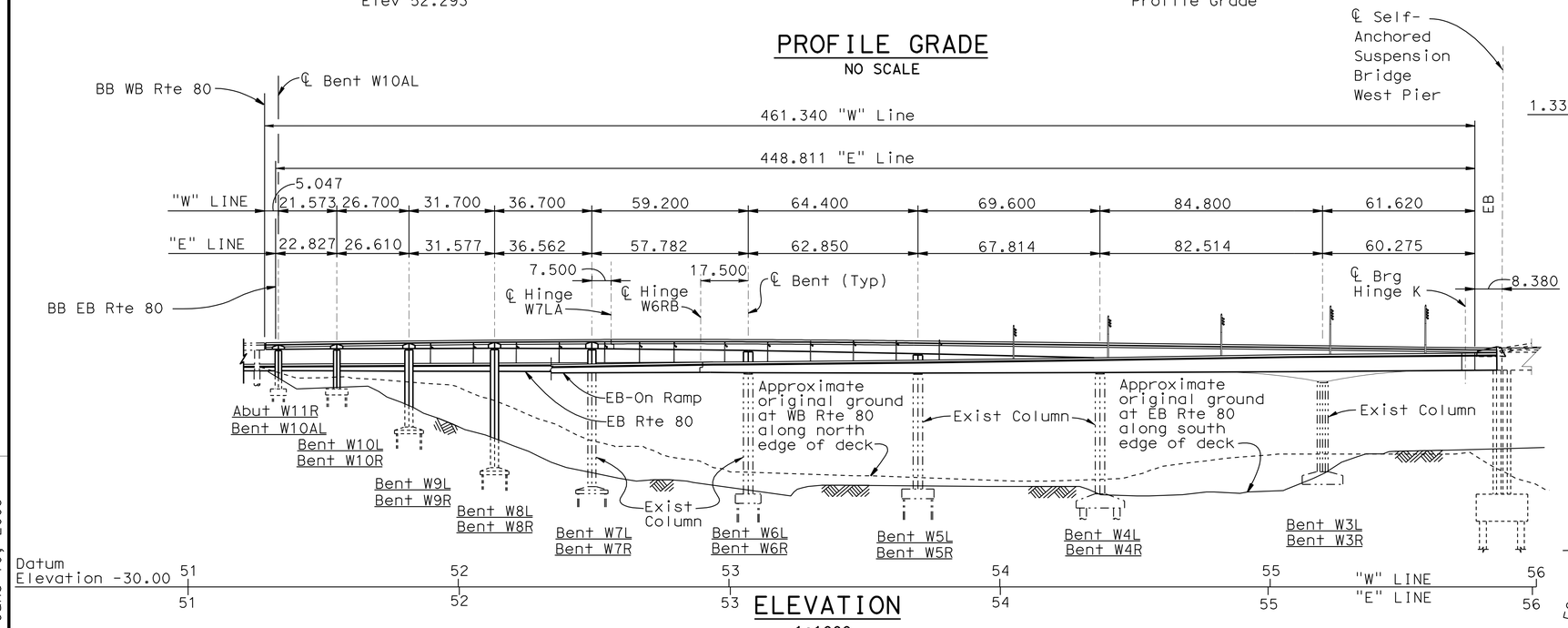

ELEVATION
1:1000

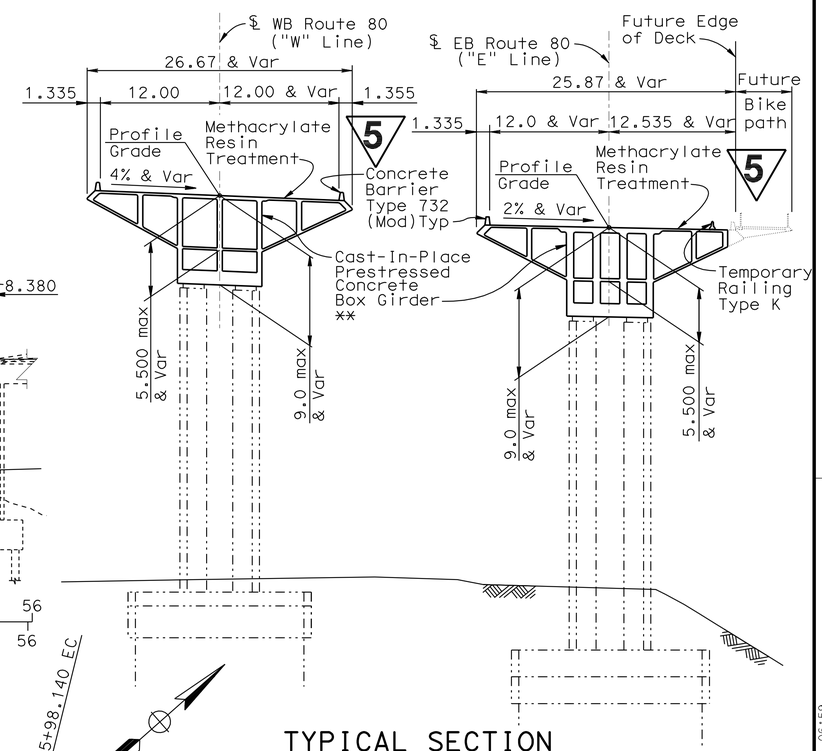

TYPICAL SECTION
(Bent W3L & W3R Shown)
1:300

** Note WB Superstructure is a Cast-in-Place conventionally reinforced concrete box girder from Bent W10AL to Hinge W7LA

Notes:
For approximate bridge quantities see "General Notes" sheet.
For pile data table see "Pile Details" sheet.

-·-·-·- Indicates existing structures.

Standard Plan Sheet No.
Detail No.

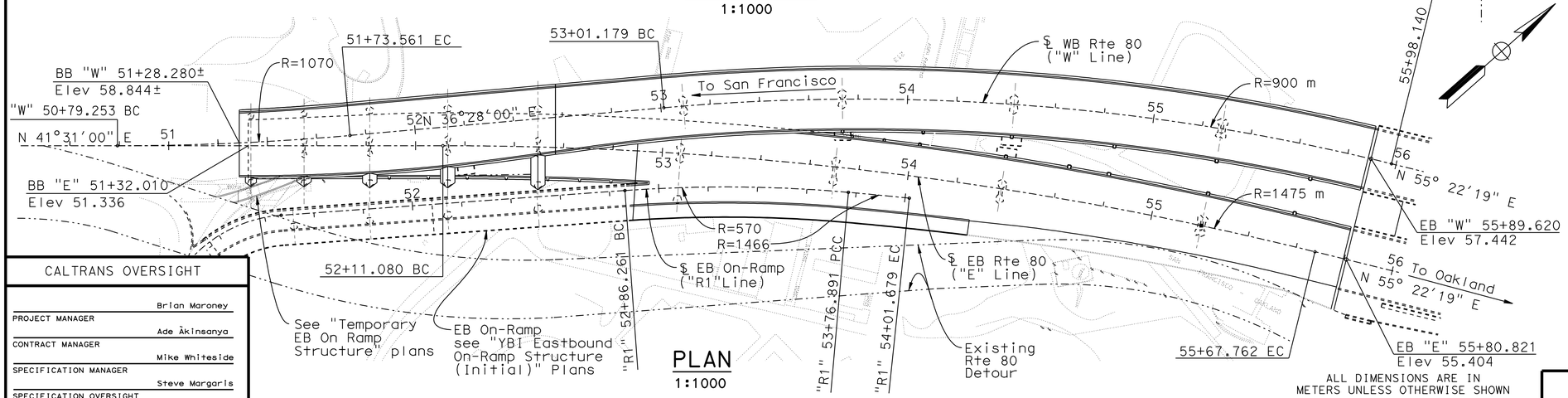

PLAN
1:1000

ALL DIMENSIONS ARE IN METERS UNLESS OTHERWISE SHOWN

CALTRANS OVERSIGHT

PROJECT MANAGER	Brian Maroney
CONTRACT MANAGER	Ade Akinsanya
SPECIFICATION MANAGER	Mike Whiteside
SPECIFICATION OVERSIGHT	Steve Margaris

DESIGN OVERSIGHT
JOHN MOOK, BERNARD CHAN, JUAN F. CARPIO
SIGN OFF DATE

Rev. Date: 5-18-98

	BY	CHECKED			
DESIGN	Desai	Jain	LOAD FACTOR DESIGN	LIVE LOADING: HS20-44 AND ALTERNATIVE AND PERMIT DESIGN LOAD	
DETAILS	van Ryn/Zucchi/Mai	Jain	LAYOUT	Desai	Alcaraz
QUANTITIES	Liao	E. Nichol	SPECIFICATIONS	J.Ely	PLANS AND SPECS COMPARED Jain

ORIGINAL SCALE IN MILLIMETERS FOR REDUCED PLANS 0 10 20 30 40 50 60 70 80 90 100

PREPARED FOR THE STATE OF CALIFORNIA DEPARTMENT OF TRANSPORTATION

Jal Birdy
PROJECT ENGINEER

CU 04251
EA 0120S1

BRIDGE NO. 34-0006 L/R
KILOMETER POST 12.8

DISREGARD PRINTS BEARING EARLIER REVISION DATES

REVISION DATES (PRELIMINARY STAGE ONLY): 9/13/07 1/31/08 3/31/08 4/9/09 6/10/09 2/14/03 7/3/06 10/12/06 1/24/07 6/25/07

SHEET 1 OF 209

SAN FRANCISCO OAKLAND BAY BRIDGE
EAST SPAN SEISMIC SAFETY PROJECT

YBI TRANSITION STRUCTURES

GENERAL PLAN

FILE => 04-0120s1-34-006r1-a-gp.add

June 10, 2009

USERNAME => trmikes1 DATE PLOTTED => 28-JUL-2009 TIME PLOTTED => 06:59

DIST.	COUNTY	ROUTE	KILOMETER POST TOTAL PROJECT	SHEET NO.	TOTAL SHEETS
04	SF	80	12.7/13.2	711	806

Caltrans Metric

REGISTERED ENGINEER - CIVIL

6-23-08
PLANS APPROVAL DATE

REGISTERED PROFESSIONAL ENGINEER A.L. ELY No. 18880 Exp. 6-30-11 CIVIL STATE OF CALIFORNIA

The State of California or its officers or agents shall not be responsible for the accuracy or completeness of electronic copies of this plan sheet.

T.Y. LIN / MOFFATT & NICHOL
TWO HARRISON STREET
SAN FRANCISCO, CA 94105

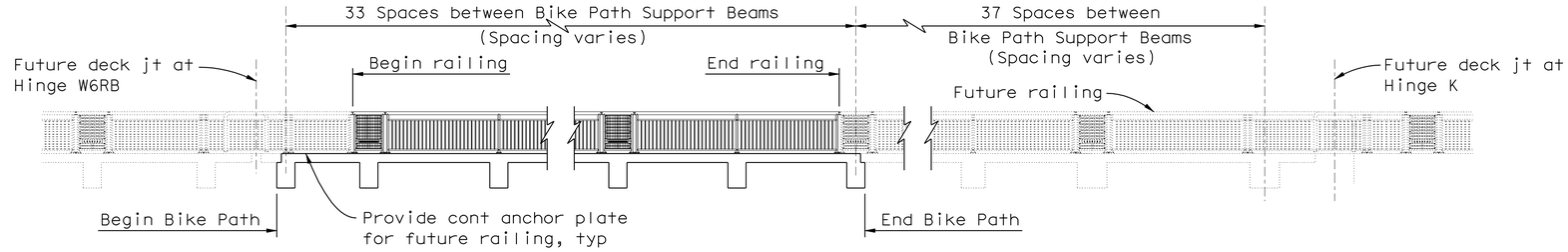

BIKE PATH RAILING LAYOUT

No Scale

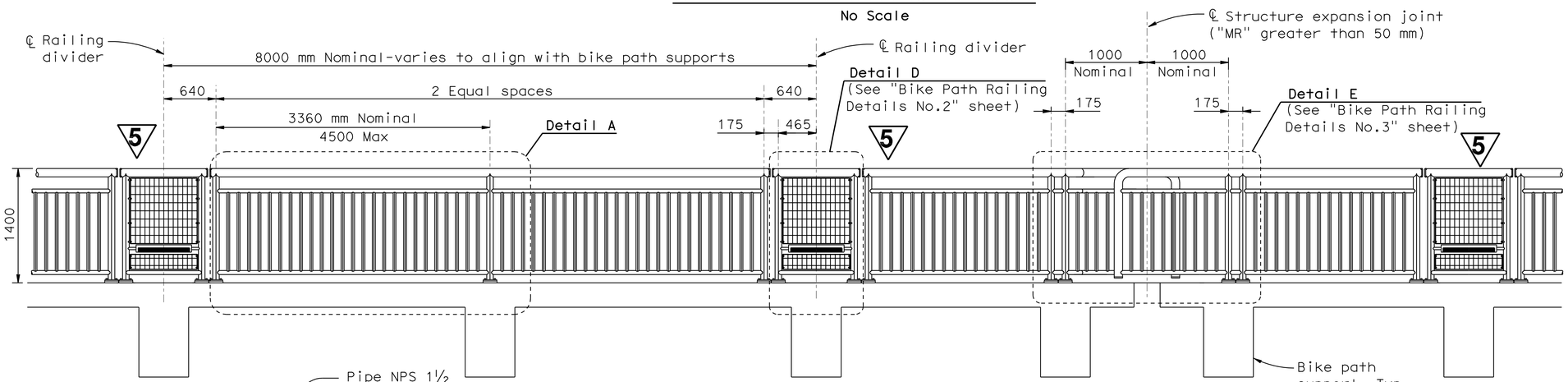

BIKE PATH RAILING-TYPICAL ELEVATION

1:30

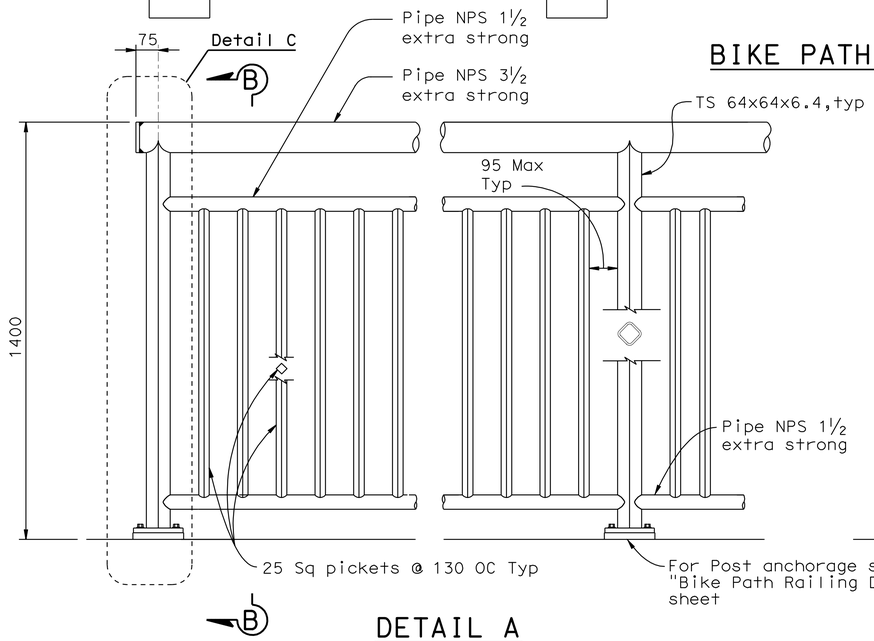

DETAIL A
1:10

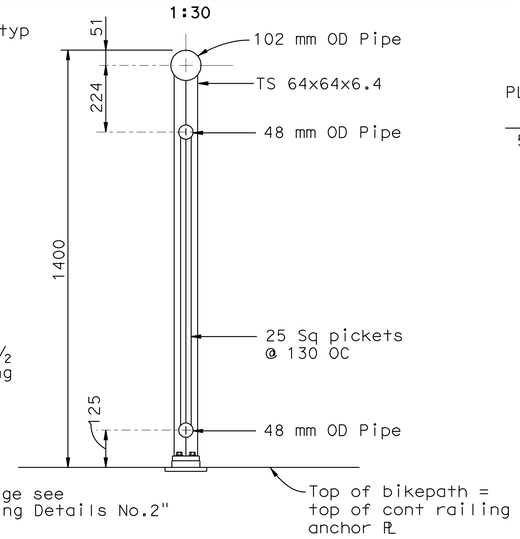

SECTION B-B
1:10

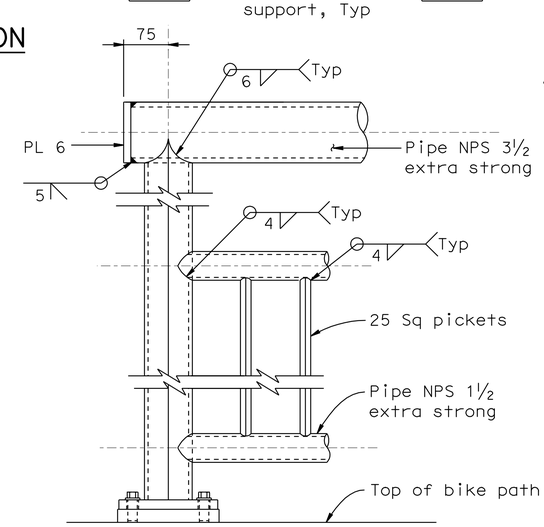

DETAIL C
1:5

NOTES:

1. All metal (except stainless steel) parts of railing assembly including grill shall be coated
2. Railing posts shall comform to ASTM A500 Grade C (Fy=345MPa).
3. Railing shall conform to vertical and horizontal alignment of bike path.
4. Posts and pickets shall be perpendicular to the profile grade of the bikepath and vertical to the cross-slope of the bikepath. Rails shall be parallel to top of bikepath. Railing grill vertical bars shall be parallel to railing posts and grill horizontal bars shall be parallel to rails. 5
5. Rails shall be shop bent or fabricated to fit horizontal curve when radius is less than 300 m.
6. All exposed welds shall be ground smooth.
7. Expansion joints shall be located in the railing panel spanning deck or wall joints, see "Bike Path Railing Details No.3" sheet.
8. Emergency gate access shall be provided thru the inside bike path railing (railing located nearest roadway) at intervals not exceeding 80 m.
9. Welding to stainless steel shall be in accordance with AWS D1.6-1999.
10. Any shims utilized to adjust railing alignment during installation shall be full width galv steel shims that are isolated from stainless steel plates by dielectric material. 5

5 **REVISED PER ADDENDUM No. 5 DATED JULY 30, 2009**

ALL DIMENSIONS ARE IN MILLIMETERS UNLESS OTHERWISE SHOWN

DESIGN OVERSIGHT
JOHN MOOK, BERNARD CHAN, JUAN F. CARPIO
March 3, 2008
SIGN OFF DATE

Rev. Date: 5-18-98

	BY	CHECKED
DESIGN	Shangkuan	Atiqullah
DETAILS	van Ryn/Zucchi/Mai	Jain
QUANTITIES	Liao	E. Nichol

PREPARED FOR THE STATE OF CALIFORNIA DEPARTMENT OF TRANSPORTATION

Jal Birdy
PROJECT ENGINEER

BRIDGE NO. 34-0006 L/R
KILOMETER POST 12.8

SAN FRANCISCO OAKLAND BAY BRIDGE
EAST SPAN SEISMIC SAFETY PROJECT

YBI TRANSITION STRUCTURES

BIKE PATH RAILING DETAILS NO.1

ORIGINAL SCALE IN MILLIMETERS FOR REDUCED PLANS 0 10 20 30 40 50 60 70 80 90 100

CU 04251
EA 0120S1

DISREGARD PRINTS BEARING EARLIER REVISION DATES

REVISION DATES (PRELIMINARY STAGE ONLY) 9/13/07 01/24/08 3/24/08 9/18/08 4/9/09 2/14/05 1/3/06 10/27/06 1/24/07 6/25/07

SHEET 162 OF 209

FILE => 04-0120s1-34-006r1-u-rbikpdt01.add

April 9, 2009

USERNAME => trmikest DATE PLOTTED => 28-JUL-2009 TIME PLOTTED => 06:59

DIST.	COUNTY	ROUTE	KILOMETER POST TOTAL PROJECT	SHEET NO.	TOTAL SHEETS
04	SF	80	12.7/13.2	712	806

REGISTERED ENGINEER - CIVIL

6-23-08
PLANS APPROVAL DATE

REGISTERED PROFESSIONAL ENGINEER A.L. ELY No. 18880 Exp. 6-30-11 CIVIL STATE OF CALIFORNIA

The State of California or its officers or agents shall not be responsible for the accuracy or completeness of electronic copies of this plan sheet.

T.Y. LIN / MOFFATT & NICHOL
TWO HARRISON STREET
SAN FRANCISCO, CA 94105

5 Caltrans Metric

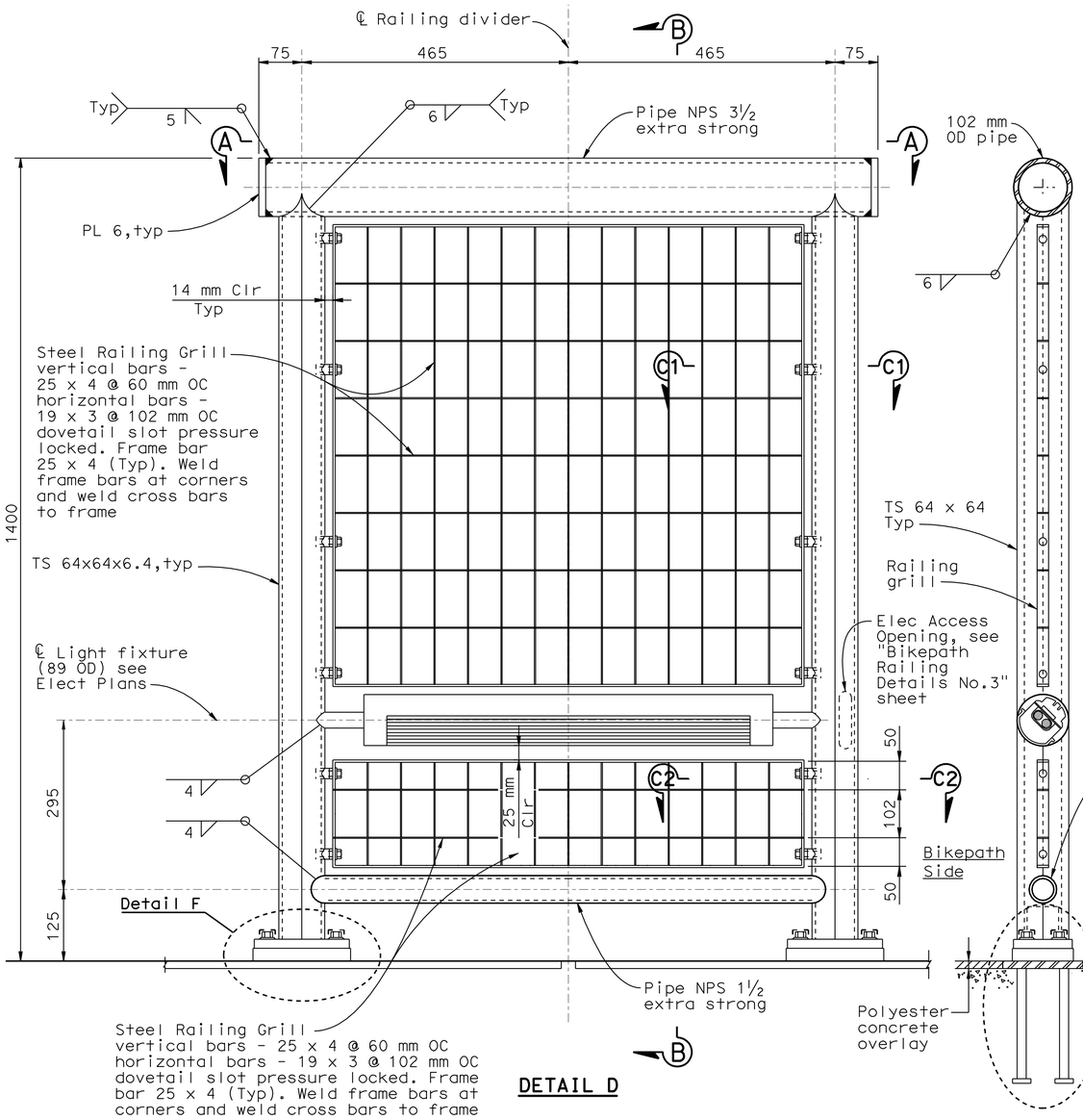

DETAIL D

SECTION B-B

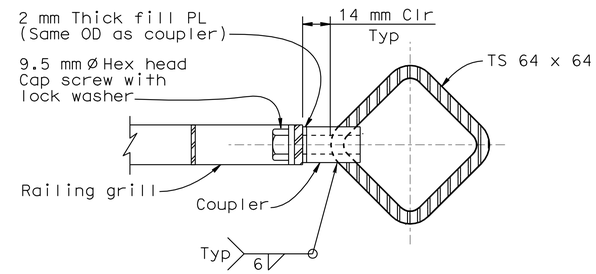

SECTION C1-C1
(Typ above light fixture)
1:1.5

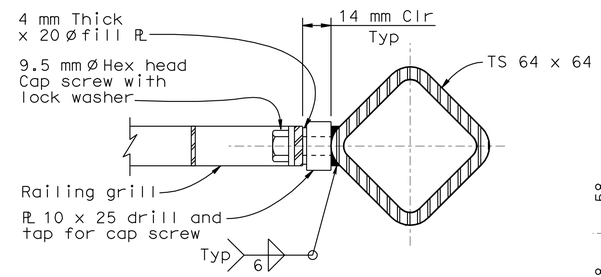

SECTION C2-C2
(Typ below light fixture)
1:1.5

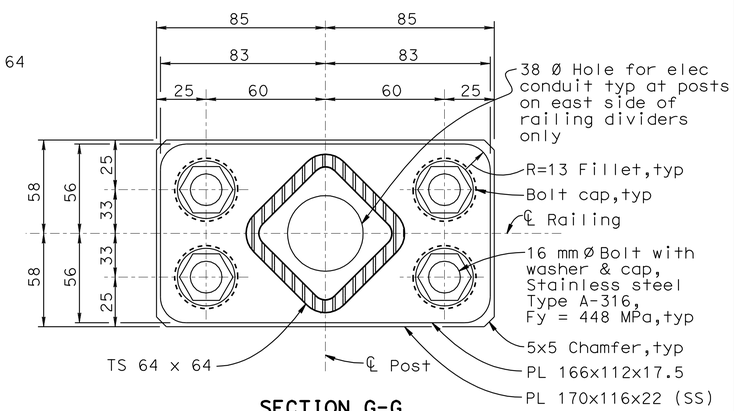

SECTION G-G

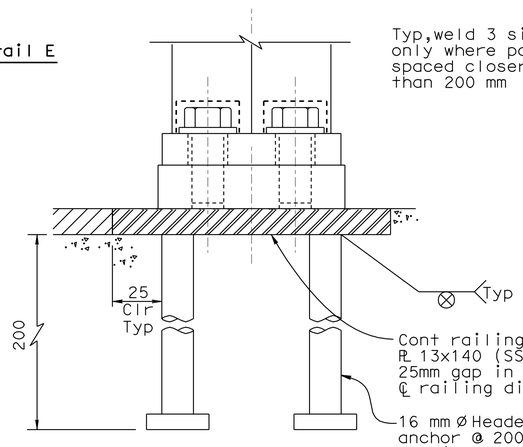

DETAIL E

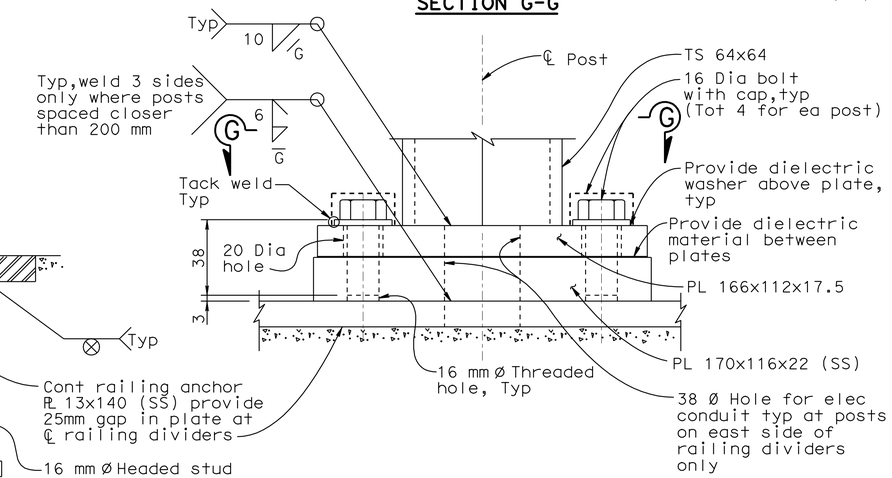

DETAIL F

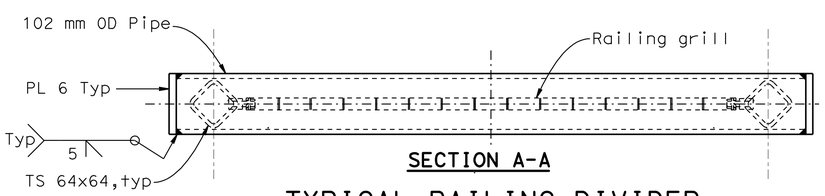

SECTION A-A

TYPICAL RAILING DIVIDER
1:5

TYPICAL POST ANCHORAGE
1:1.5

5 REVISED PER ADDENDUM No. 5 DATED JULY 30, 2009

ALL DIMENSIONS ARE IN MILLIMETERS UNLESS OTHERWISE SHOWN

DESIGN OVERSIGHT
JOHN MOOK, BERNARD CHAN, JUAN F. CARPIO
March 3, 2008
SIGN OFF DATE

Rev. Date: 5-18-98

	BY	CHECKED
DESIGN	Shangkuan	Atiqullah
DETAILS	van Ryn/Zucchi/Mai	Jain
QUANTITIES	Liao	E. Nichol

ORIGINAL SCALE IN MILLIMETERS FOR REDUCED PLANS 0 10 20 30 40 50 60 70 80 90 100

PREPARED FOR THE STATE OF CALIFORNIA DEPARTMENT OF TRANSPORTATION

Jal Birdy
PROJECT ENGINEER

CU 04251
EA 0120S1

BRIDGE NO. 34-0006 L/R
KILOMETER POST 12.8

SAN FRANCISCO OAKLAND BAY BRIDGE
EAST SPAN SEISMIC SAFETY PROJECT

YBI TRANSITION STRUCTURES

BIKE PATH RAILING DETAILS NO.2

DISREGARD PRINTS BEARING EARLIER REVISION DATES

REVISION DATES (PRELIMINARY STAGE ONLY) 9/13/07 01/31/08 3/31/08 5/9/08 9/18/08 4/9/09 7/31/06 10/27/06 1/24/07 6/25/07

SHEET 163 OF 209

FILE => 04-0120s1-34-006r1-u-rbikpdt02.add

April 9, 2009

USERNAME => trmikest DATE PLOTTED => 28-JUL-2009 TIME PLOTTED => 08:59

DIST.	COUNTY	ROUTE	KILOMETER POST TOTAL PROJECT	SHEET NO.	TOTAL SHEETS
04	SF	80	12.7/13.2	713	806

REGISTERED ENGINEER - CIVIL

6-23-08
PLANS APPROVAL DATE

REGISTERED PROFESSIONAL ENGINEER A.L. ELY No. 18880 Exp. 6-30-11 CIVIL STATE OF CALIFORNIA

The State of California or its officers or agents shall not be responsible for the accuracy or completeness of electronic copies of this plan sheet.

T.Y. LIN / MOFFATT & NICHOL
TWO HARRISON STREET
SAN FRANCISCO, CA 94105

To get to the Caltrans web site, go to: http://www.dot.ca.gov

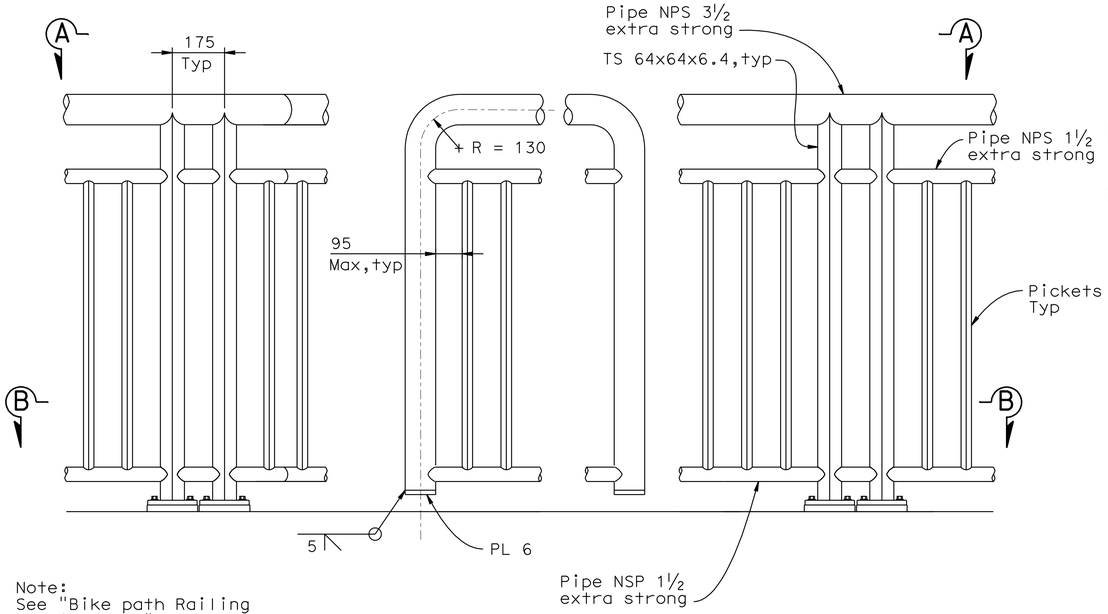

Note:
See "Bike path Railing Details No.1" sheet for additional details.

DETAIL E

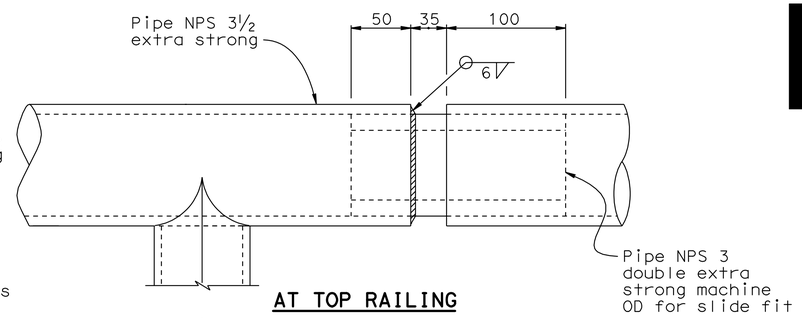

AT TOP RAILING

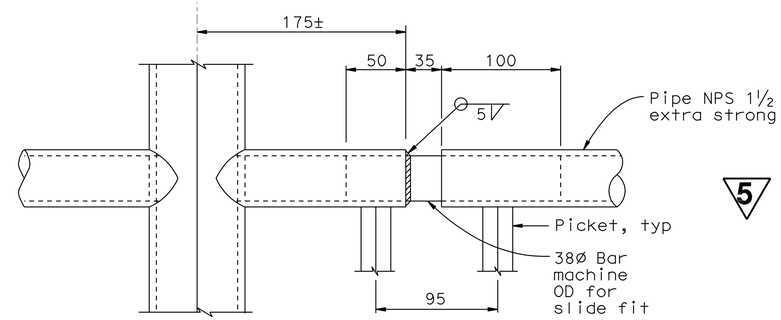

AT INTERMEDIATE AND BOTTOM RAILING

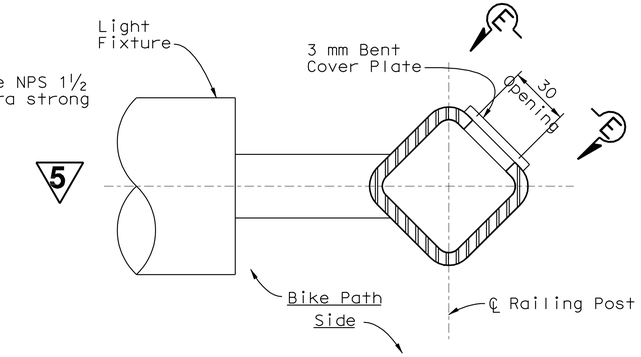

PLAN

RAILING EXPANSION JOINT DETAILS MR ≤ 50

"For use at structure expansion joints with "MR" equal to or less than 50 mm)
1:2.5

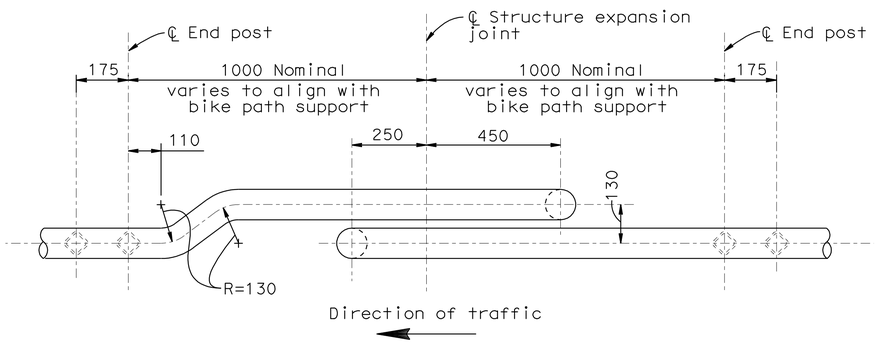

SECTION A-A

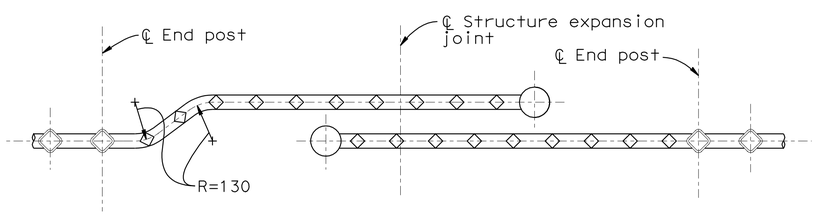

SECTION B-B

RAILING EXPANSION JOINT DETAILS MR > 50

(For use at structure expansion joints with "MR" greater than 50 mm)
1:10

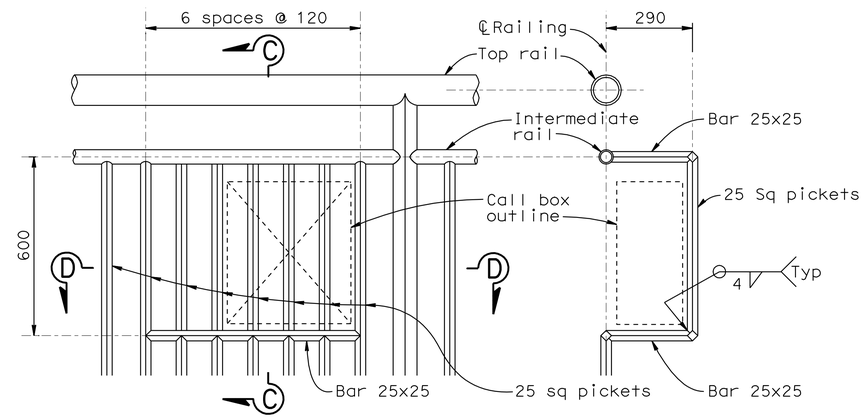

ELEVATION

SECTION C-C

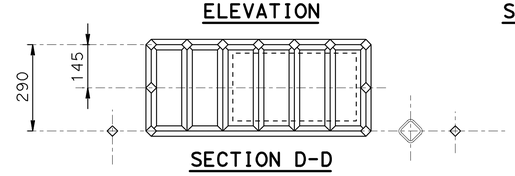

SECTION D-D

CALL BOX MOUNTING DETAIL

1:10

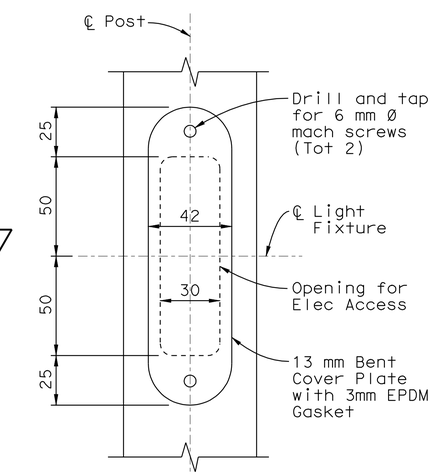

SECTION E-E

ELECTRICAL ACCESS OPENING AT BIKEPATH LIGHT FIXTURE

(Required at Posts on east side of Railing Dividers only)
1:1.5

ALL DIMENSIONS ARE IN MILLIMETERS UNLESS OTHERWISE SHOWN

5 **REVISED PER ADDENDUM No. 5 DATED JULY 30, 2009**

DESIGN OVERSIGHT
JOHN MOOK, BERNARD CHAN, JUAN F. CARPIO
March 3, 2008
SIGN OFF DATE

	BY	CHECKED
DESIGN	Shangkuan	Atiqullah
DETAILS	van Ryn/Zucchi/Mai	Jain
QUANTITIES	Liao	E. Nichol

PREPARED FOR THE STATE OF CALIFORNIA DEPARTMENT OF TRANSPORTATION

Jal Birdy
PROJECT ENGINEER

BRIDGE NO. 34-0006 L/R
KILOMETER POST 12.8

SAN FRANCISCO OAKLAND BAY BRIDGE
EAST SPAN SEISMIC SAFETY PROJECT

YBI TRANSITION STRUCTURES

BIKE PATH RAILING DETAILS NO.3

Rev. Date: 5-18-98

ORIGINAL SCALE IN MILLIMETERS FOR REDUCED PLANS 0 10 20 30 40 50 60 70 80 90 100

CU 04251
EA 0120S1

DISREGARD PRINTS BEARING EARLIER REVISION DATES

REVISION DATES (PRELIMINARY STAGE ONLY) 9/13/07 01/24/08 3/24/08 5/9/08 4/9/09 2/24/03 3/3/06 10/2/06 1/24/07 6/25/07

SHEET 164 OF 209

FILE => 04-0120s1-34-006rl-u-rbikpdt03.add

April 9, 2009

USERNAME => trmikesl DATE PLOTTED => 28-JUL-2009 TIME PLOTTED => 07:00

DIST.	COUNTY	ROUTE	KILOMETER POST TOTAL PROJECT	SHEET NO.	TOTAL SHEETS
04	SF	80	12.7/13.2	714	806

REGISTERED ENGINEER - CIVIL

6-23-08
PLANS APPROVAL DATE

REGISTERED PROFESSIONAL ENGINEER A.L. ELY No. 18880 Exp. 6-30-11 CIVIL STATE OF CALIFORNIA

The State of California or its officers or agents shall not be responsible for the accuracy or completeness of electronic copies of this plan sheet.

T.Y. LIN / MOFFATT & NICHOL
TWO HARRISON STREET
SAN FRANCISCO, CA 94105

Caltrans Metric

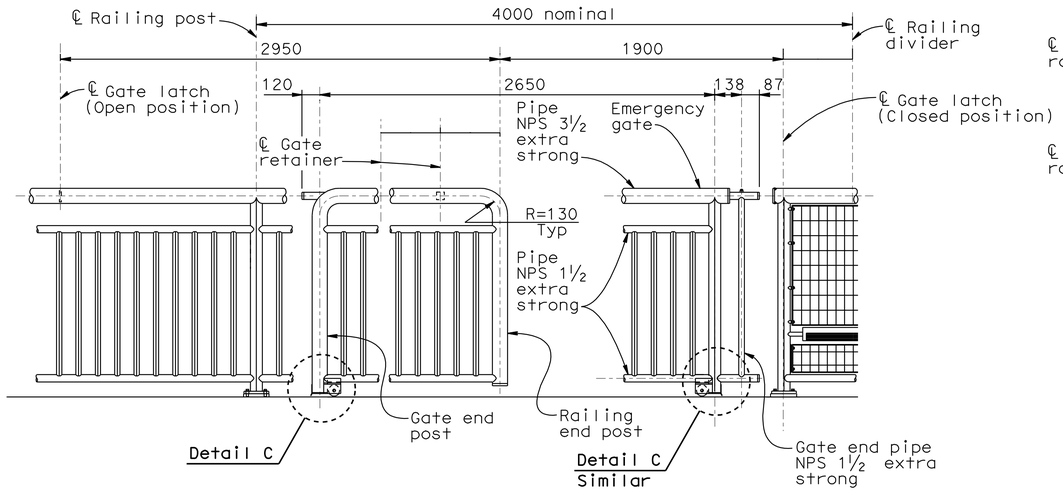

ELEVATION - EMERGENCY GATE
1:20

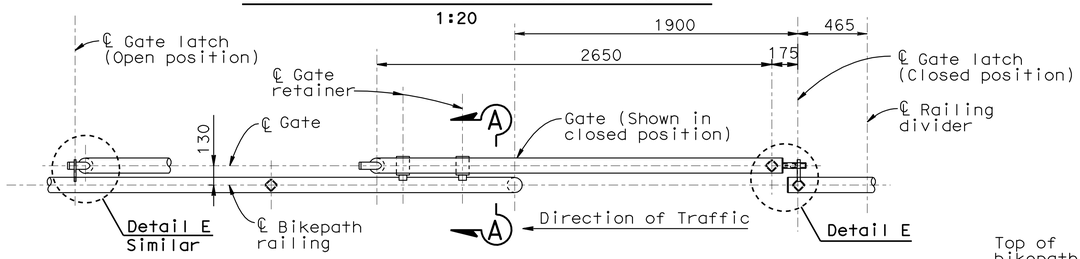

PLAN AT TOP RAIL
1:20

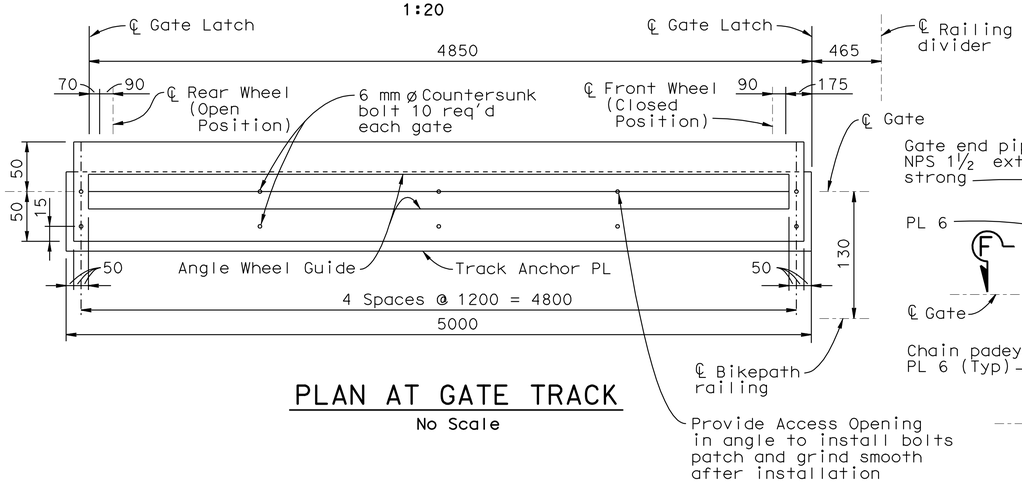

PLAN AT GATE TRACK
No Scale

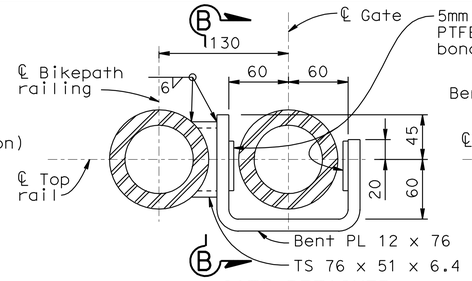

GATE RETAINER

SECTION A-A
1:3

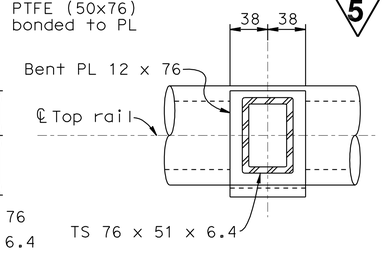

SECTION B-B
1:3

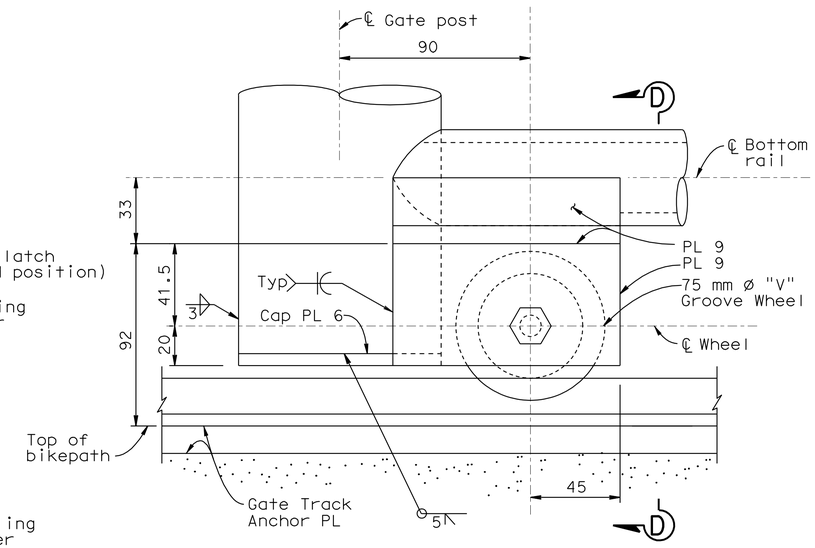

DETAIL C
1:1.5

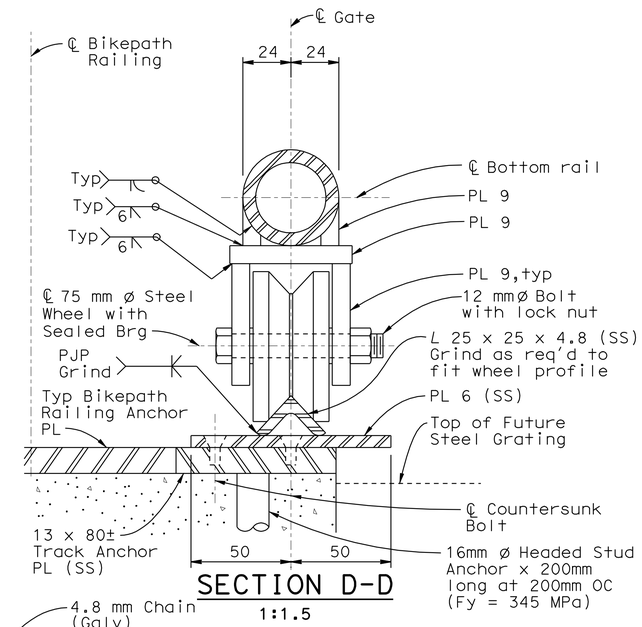

SECTION D-D
1:1.5

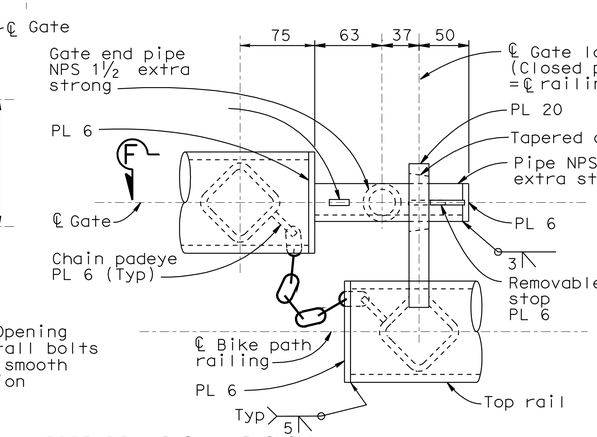

DETAIL E
1:3

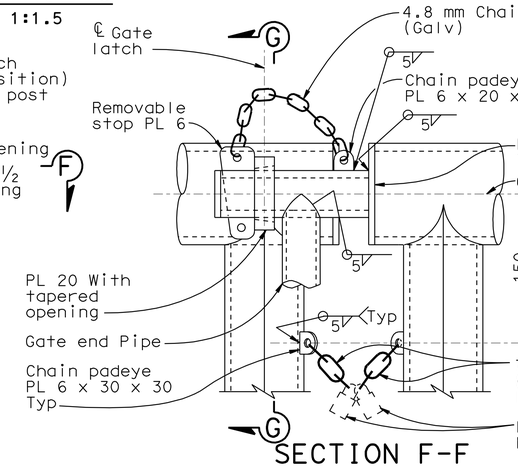

SECTION F-F
1:3

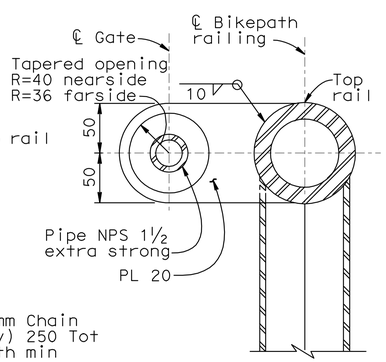

SECTION G-G
1:3

5 REVISED PER ADDENDUM No. 5 DATED JULY 30, 2009

ALL DIMENSIONS ARE IN MILLIMETERS UNLESS OTHERWISE SHOWN

DESIGN OVERSIGHT
JOHN MOOK, BERNARD CHAN, JUAN F. CARPIO
March 3, 2008
SIGN OFF DATE

Rev. Date: 5-18-98

	BY	CHECKED
DESIGN	Shangkuan	Atiqullah
DETAILS	van Ryn/Zucchi/Mai	Jain
QUANTITIES	Liao	E. Nichol

ORIGINAL SCALE IN MILLIMETERS FOR REDUCED PLANS 0 10 20 30 40 50 60 70 80 90 100

PREPARED FOR THE STATE OF CALIFORNIA DEPARTMENT OF TRANSPORTATION

Jal Birdy
PROJECT ENGINEER

CU 04251
EA 0120S1

BRIDGE NO. 34-0006 L/R
KILOMETER POST 12.8

DISREGARD PRINTS BEARING EARLIER REVISION DATES

SAN FRANCISCO OAKLAND BAY BRIDGE
EAST SPAN SEISMIC SAFETY PROJECT

YBI TRANSITION STRUCTURES

BIKE PATH RAILING DETAILS NO.4

REVISION DATES (PRELIMINARY STAGE ONLY) 9/13/07 01/31/08 3/31/08 9/18/08 4/9/09 2/14/05 7/31/06 10/27/06 1/24/07 6/28/07

SHEET 165 OF 209

FILE => 04-0120s1-34-006rl-u-rbikpdt04.add

April 9, 2009

USERNAME => trmikest DATE PLOTTED => 28-JUL-2009 TIME PLOTTED => 07:00