Dist	COUNTY	ROUTE	POST MILES TOTAL PROJECT	SHEET No.	TOTAL SHEETS
03	Yol,Sac	80	R10.9/R11.7, M0.0/M10.4	501	1012

REGISTERED CIVIL ENGINEER — DATE 6-14-10

9-7-10
PLANS APPROVAL DATE

REGISTERED PROFESSIONAL ENGINEER — A.C. Murphy No. 47645 Exp. 12-31-11 CIVIL — STATE OF CALIFORNIA

THE STATE OF CALIFORNIA OR ITS OFFICERS OR AGENTS SHALL NOT BE RESPONSIBLE FOR THE ACCURACY OR COMPLETENESS OF ELECTRONIC COPIES OF THIS PLAN SHEET.

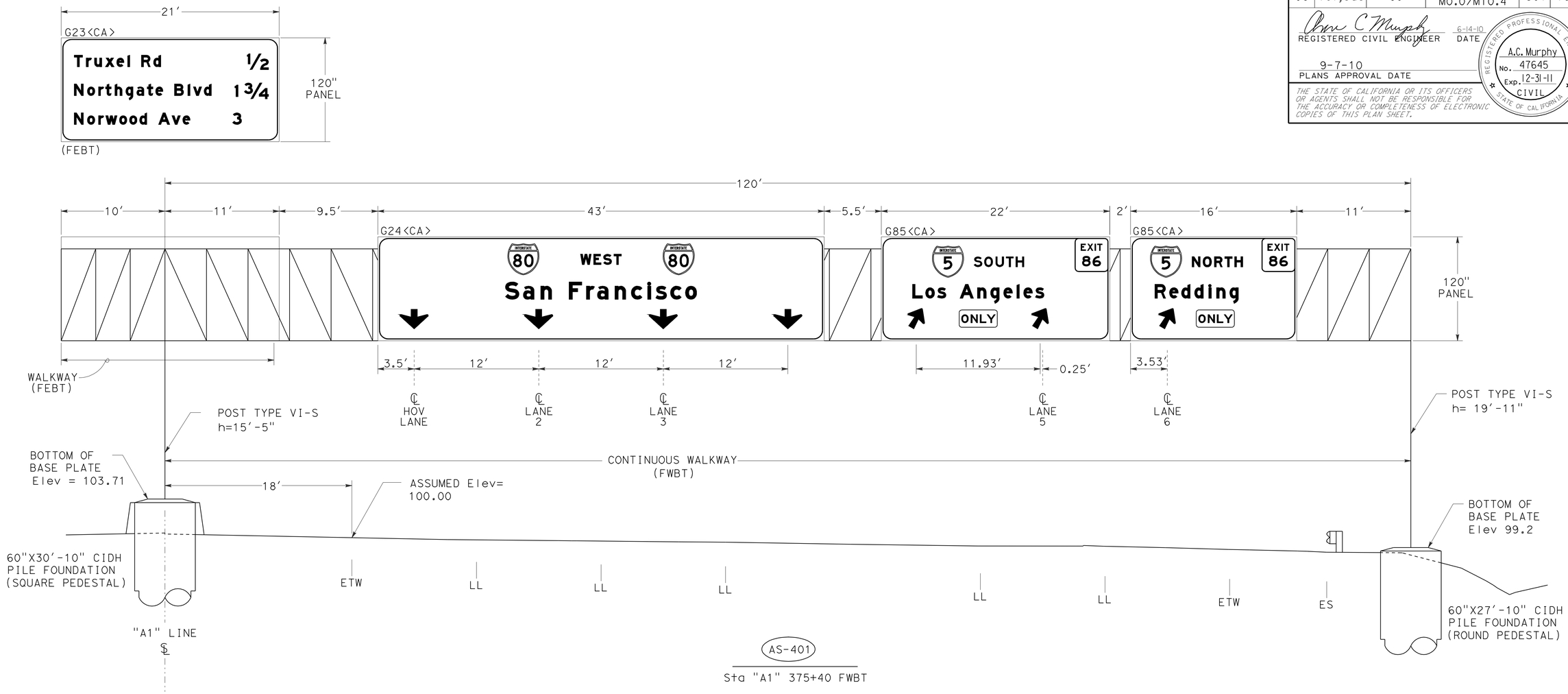

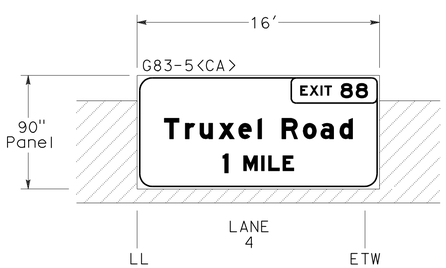

AS-136

BRIDGE MOUNTED SIGN (FEBT)
W CONNECTOR OC
Br No. 24-206F
(SEE STRUCTURE PLANS FOR MOUNTING DETAILS)

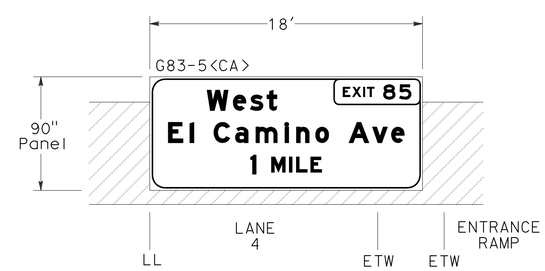

AS-137

BRIDGE MOUNTED SIGN (FWBT)
ROUTE 5/80 Sep
Br No. 24-207R
(SEE STRUCTURE PLANS FOR MOUNTING DETAILS)

SIGN DETAILS

NO SCALE

SD-10

REVISED BY | DATE REVISED
JACK KEMMERLY | AC MURPHY
CALCULATED-DESIGNED BY | CHECKED BY
FUNCTIONAL SUPERVISOR: JOSEPH W. HORTON

STATE OF CALIFORNIA - DEPARTMENT OF TRANSPORTATION
Caltrans® TRAFFIC

LAST REVISION 6-7-10 | DATE PLOTTED => 03-FEB-2011 | TIME PLOTTED => 13:16

Dist	COUNTY	ROUTE	POST MILES TOTAL PROJECT	SHEET No.	TOTAL SHEETS
03	Yol,Sac	80	R10.9/R11.7, M0.0/M10.4	502	1012

REGISTERED CIVIL ENGINEER 6-14-10 DATE

9-7-10
PLANS APPROVAL DATE

REGISTERED PROFESSIONAL ENGINEER A.C. Murphy No. 47645 Exp. 12-31-11 CIVIL STATE OF CALIFORNIA

THE STATE OF CALIFORNIA OR ITS OFFICERS OR AGENTS SHALL NOT BE RESPONSIBLE FOR THE ACCURACY OR COMPLETENESS OF ELECTRONIC COPIES OF THIS PLAN SHEET.

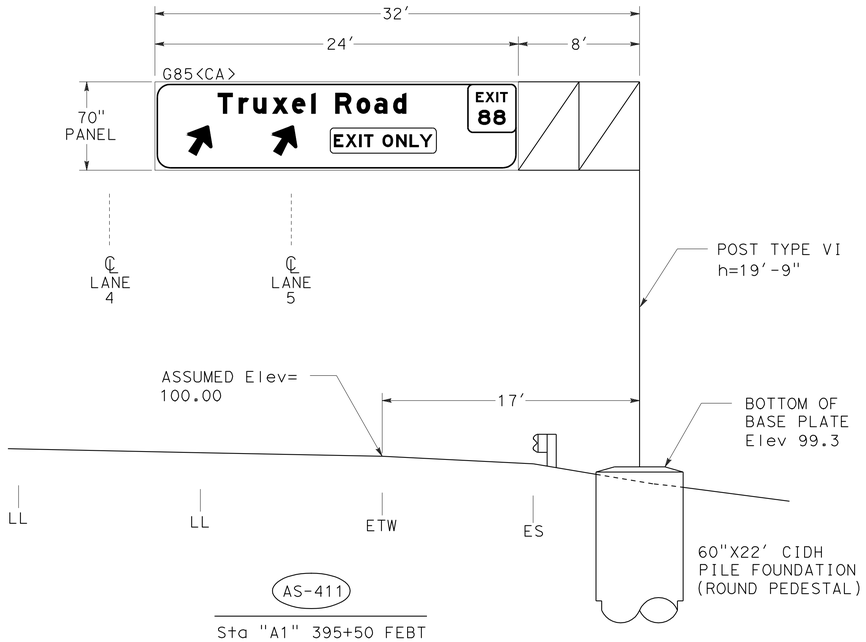

AS-411

Sta "A1" 395+50 FEBT

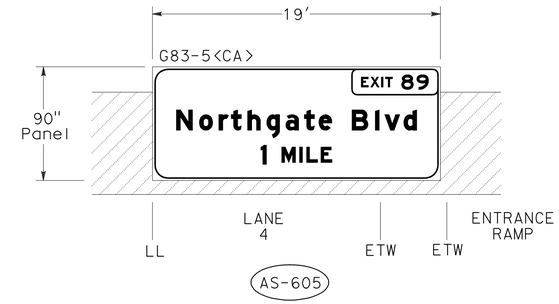

AS-605

BRIDGE MOUNTED SIGN (FEBT)

TRUXEL Rd OC
Br No. 24-362
(SEE STRUCTURE PLANS FOR MOUNTING DETAILS)

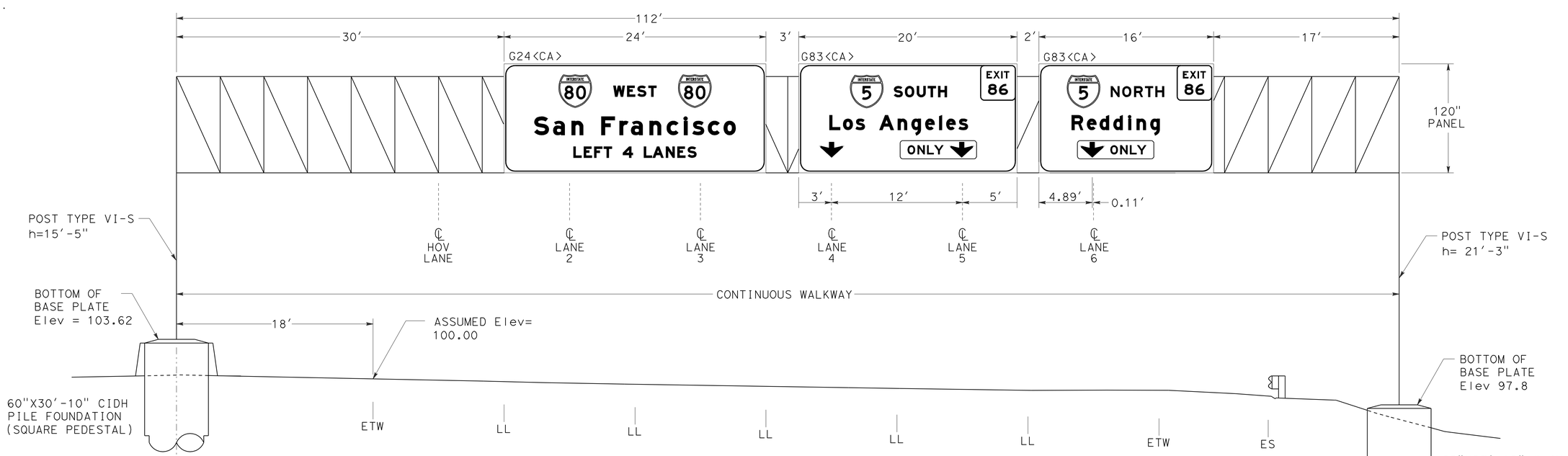

AS-415

Sta "A1" 393+00 FWBT

SIGN DETAILS

NO SCALE

SD-11

STATE OF CALIFORNIA - DEPARTMENT OF TRANSPORTATION
Caltrans
TRAFFIC

FUNCTIONAL SUPERVISOR: JOSEPH W. HORTON
CALCULATED-DESIGNED BY: JACK KEMMERLY
CHECKED BY: AC MURPHY
REVISED BY
DATE REVISED

LAST REVISION 6-7-10
DATE PLOTTED => 03-FEB-2011
TIME PLOTTED => 13:16

Dist	COUNTY	ROUTE	POST MILES TOTAL PROJECT	SHEET No.	TOTAL SHEETS
03	Yol,Sac	80	R10.9/R11.7, M0.0/M10.4	503	1012

REGISTERED CIVIL ENGINEER — DATE 6-14-10

9-7-10
PLANS APPROVAL DATE

REGISTERED PROFESSIONAL ENGINEER — A.C. Murphy No. 47645 Exp. 12-31-11 CIVIL — STATE OF CALIFORNIA

THE STATE OF CALIFORNIA OR ITS OFFICERS OR AGENTS SHALL NOT BE RESPONSIBLE FOR THE ACCURACY OR COMPLETENESS OF ELECTRONIC COPIES OF THIS PLAN SHEET.

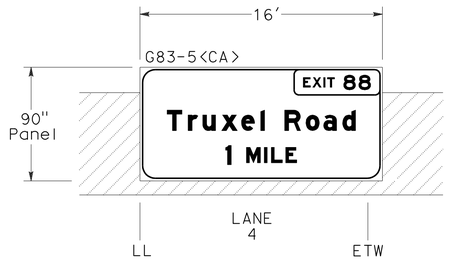

AS-145

BRIDGE MOUNTED SIGN (FWBT)

NORTHGATE Blvd OC
Br No. 24-217
(SEE STRUCTURE PLANS FOR MOUNTING DETAILS)

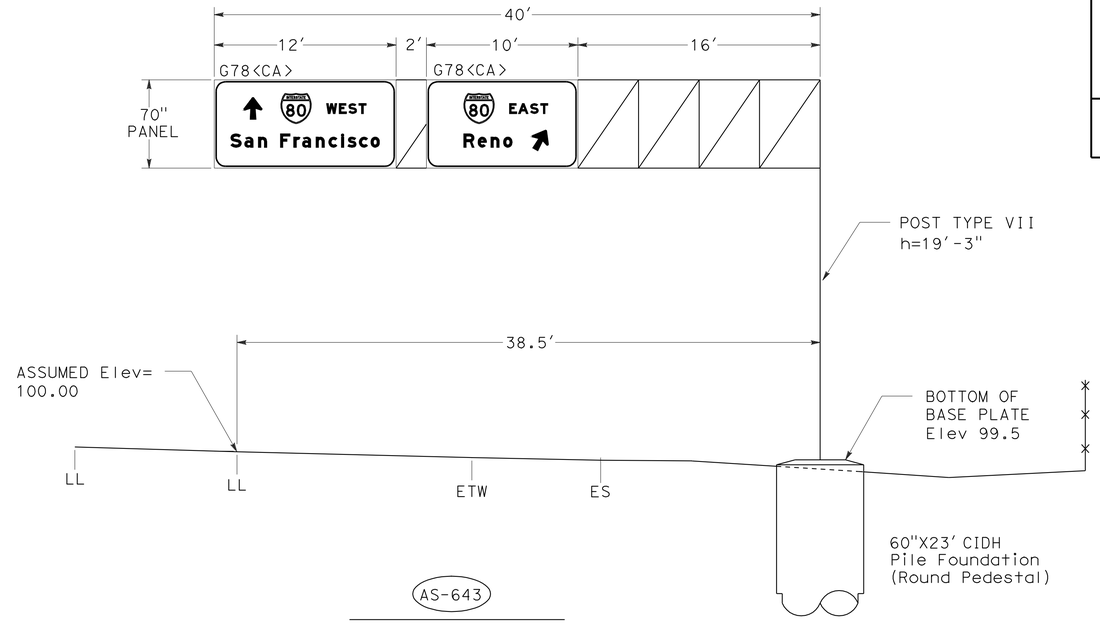

AS-643

NORTHGATE Blvd FNBT

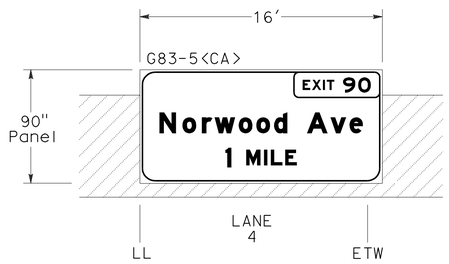

AS-144

BRIDGE MOUNTED SIGN (FEBT)

NORTHGATE Blvd OC
Br No. 24-217
(SEE STRUCTURE PLANS FOR MOUNTING DETAILS)

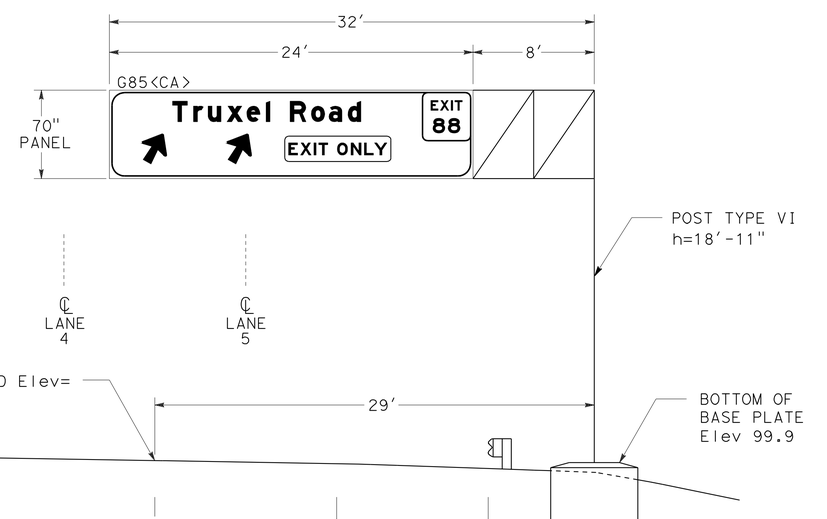

AS-413

Sta "A1" 429+50 FWBT

AS-606

BRIDGE MOUNTED SIGN (FWBT)

TRUXEL Rd OC
Br No. 24-362
(SEE STRUCTURE PLANS FOR MOUNTING DETAILS)

SIGN DETAILS

NO SCALE

SD-12

REVISED BY	DATE REVISED
JACK KEMMERLY	AC MURPHY
CALCULATED-DESIGNED BY	CHECKED BY
FUNCTIONAL SUPERVISOR	JOSEPH W. HORTON

STATE OF CALIFORNIA - DEPARTMENT OF TRANSPORTATION — TRAFFIC — Caltrans

LAST REVISION 6-7-10 — DATE PLOTTED => 03-FEB-2011 — TIME PLOTTED => 13:16

Dist	COUNTY	ROUTE	POST MILES TOTAL PROJECT	SHEET No.	TOTAL SHEETS
03	Yol,Sac	80	R10.9/R11.7, M0.0/M10.4	504	1012

REGISTERED CIVIL ENGINEER 6-14-10 DATE

9-7-10
PLANS APPROVAL DATE

REGISTERED PROFESSIONAL ENGINEER A.C. Murphy No. 47645 Exp. 12-31-11 CIVIL STATE OF CALIFORNIA

THE STATE OF CALIFORNIA OR ITS OFFICERS OR AGENTS SHALL NOT BE RESPONSIBLE FOR THE ACCURACY OR COMPLETENESS OF ELECTRONIC COPIES OF THIS PLAN SHEET.

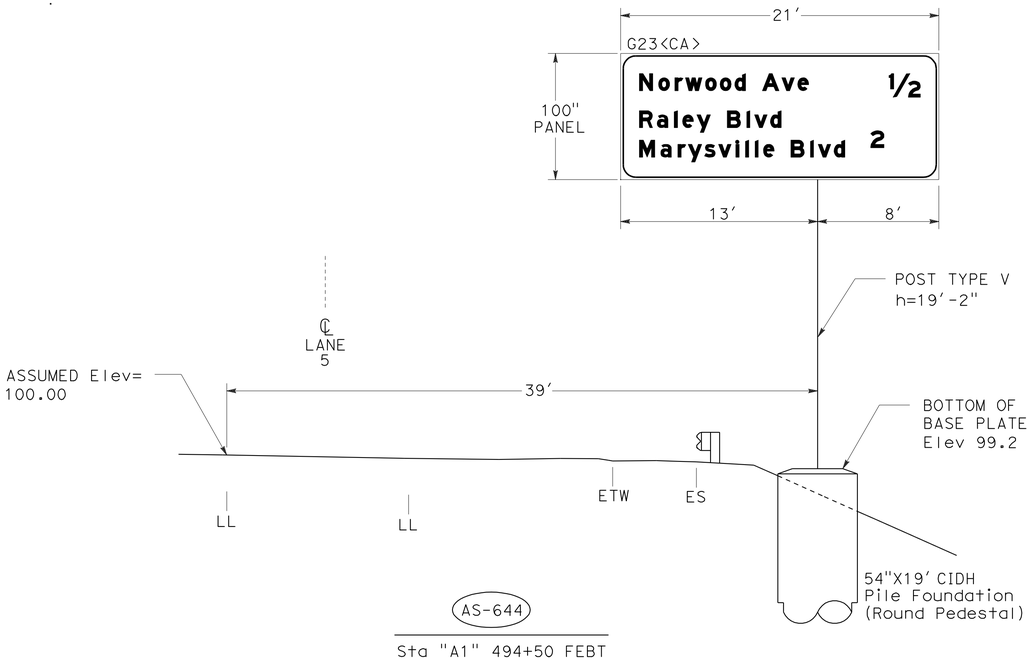

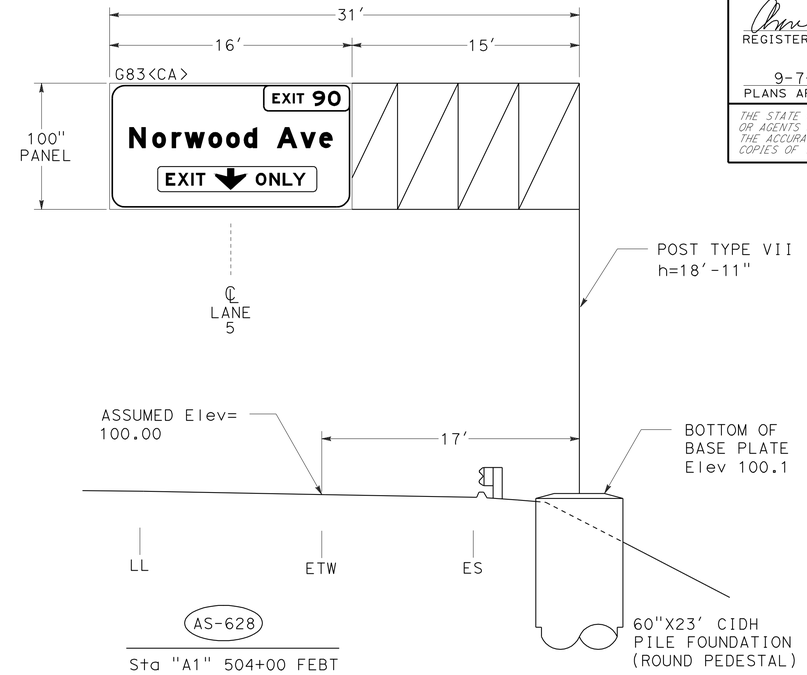

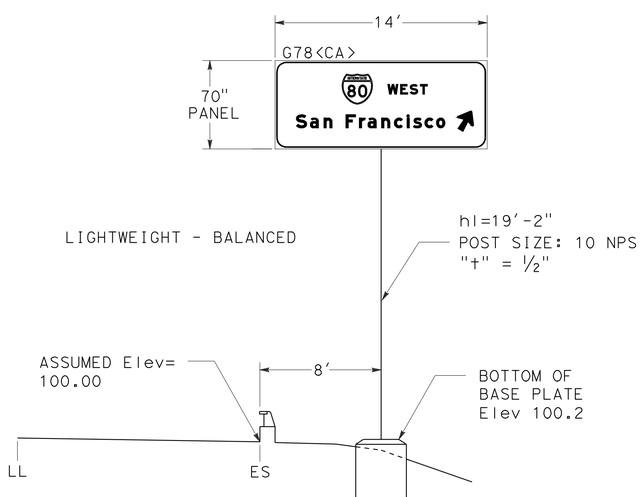

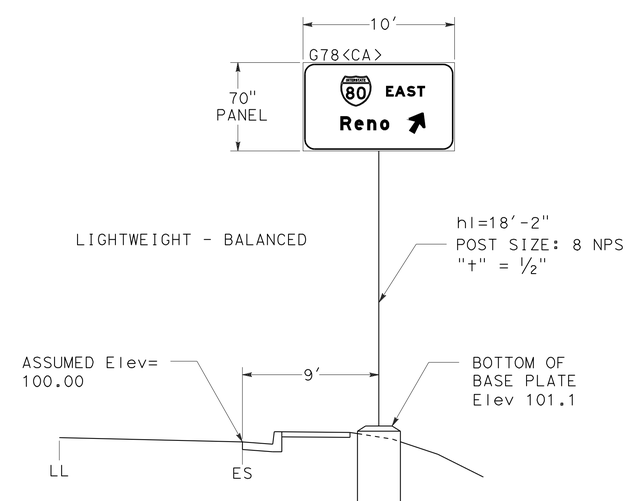

SIGN DETAILS

NO SCALE

SD-13

REVISED BY | DATE REVISED
JACK KEMMERLY | AC MURPHY
CALCULATED-DESIGNED BY | CHECKED BY
FUNCTIONAL SUPERVISOR: JOSEPH W. HORTON

STATE OF CALIFORNIA - DEPARTMENT OF TRANSPORTATION
Caltrans
TRAFFIC

LAST REVISION 3-8-10
DATE PLOTTED => 03-FEB-2011
TIME PLOTTED => 13:16

Dist	COUNTY	ROUTE	POST MILES TOTAL PROJECT	SHEET No.	TOTAL SHEETS
03	Yol,Sac	80	R10.9/R11.7, M0.0/M10.4	505	1012

REGISTERED CIVIL ENGINEER 6-14-10 DATE

9-7-10
PLANS APPROVAL DATE

REGISTERED PROFESSIONAL ENGINEER A.C. Murphy No. 47645 Exp. 12-31-11 CIVIL STATE OF CALIFORNIA

THE STATE OF CALIFORNIA OR ITS OFFICERS OR AGENTS SHALL NOT BE RESPONSIBLE FOR THE ACCURACY OR COMPLETENESS OF ELECTRONIC COPIES OF THIS PLAN SHEET.

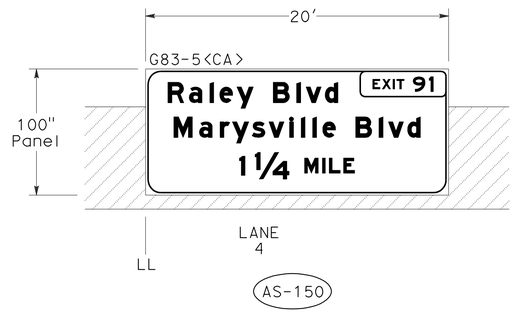

BRIDGE MOUNTED SIGN (FEBT)
NORWOOD Ave OC
Br No. 24-108
(SEE STRUCTURE PLANS FOR MOUNTING DETAILS)

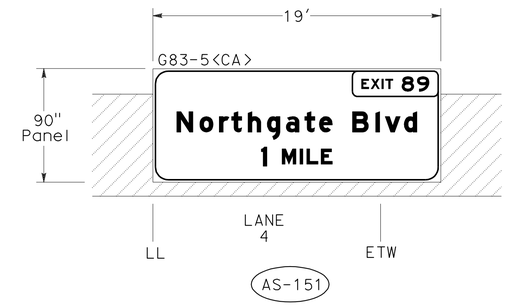

BRIDGE MOUNTED SIGN (FWBT)
NORWOOD Ave OC
Br No. 24-108
(SEE STRUCTURE PLANS FOR MOUNTING DETAILS)

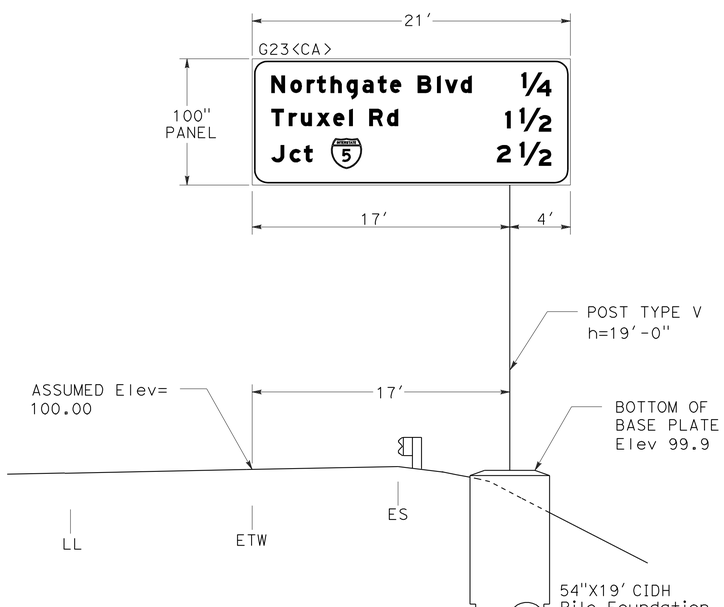

Sta "A1" 508+00 FWBT

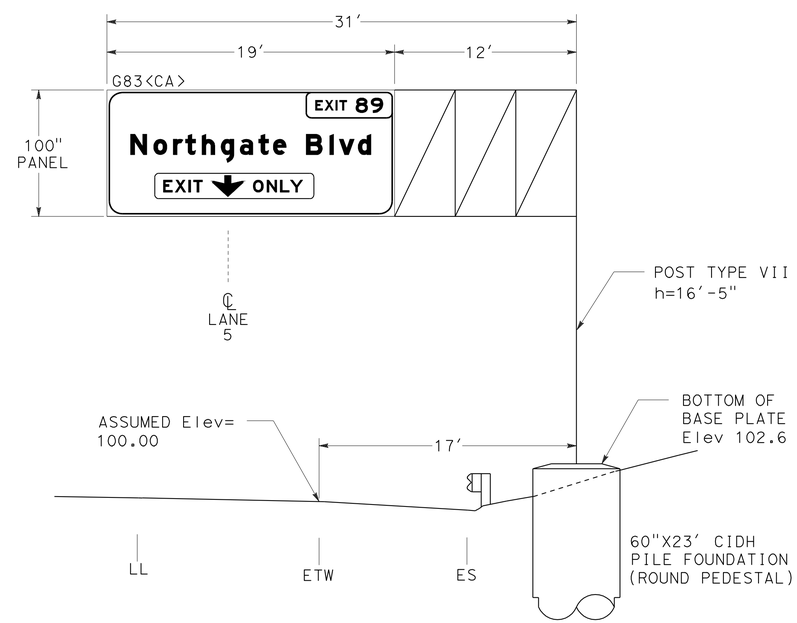

Sta "A1" 522+00 FWBT

SIGN DETAILS

NO SCALE

SD-14

STATE OF CALIFORNIA - DEPARTMENT OF TRANSPORTATION
Caltrans
TRAFFIC

FUNCTIONAL SUPERVISOR: JOSEPH W. HORTON
CALCULATED-DESIGNED BY: JACK KEMMERLY
CHECKED BY: AC MURPHY
REVISED BY / DATE REVISED

LAST REVISION 6-7-10
DATE PLOTTED => 03-FEB-2011
TIME PLOTTED => 13:16

Dist	COUNTY	ROUTE	POST MILES TOTAL PROJECT	SHEET No.	TOTAL SHEETS
03	Yol,Sac	80	R10.9/R11.7, M0.0/M10.4	506	1012

REGISTERED CIVIL ENGINEER — DATE 6-14-10

9-7-10
PLANS APPROVAL DATE

REGISTERED PROFESSIONAL ENGINEER A.C. Murphy No. 47645 Exp. 12-31-11 CIVIL STATE OF CALIFORNIA

THE STATE OF CALIFORNIA OR ITS OFFICERS OR AGENTS SHALL NOT BE RESPONSIBLE FOR THE ACCURACY OR COMPLETENESS OF ELECTRONIC COPIES OF THIS PLAN SHEET.

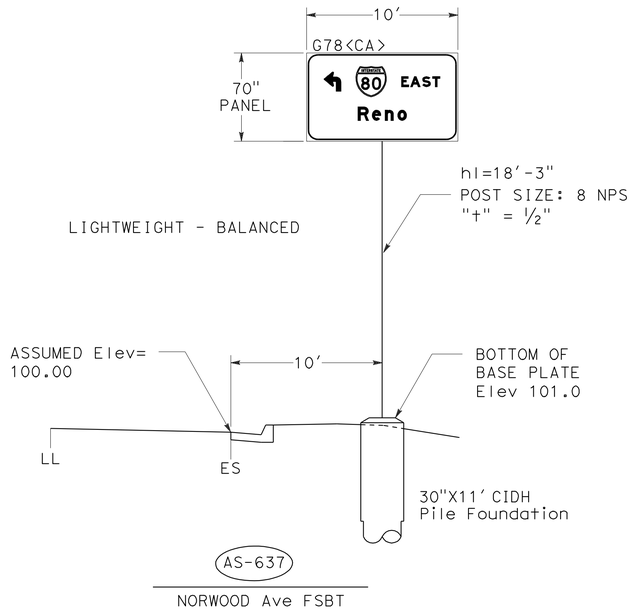

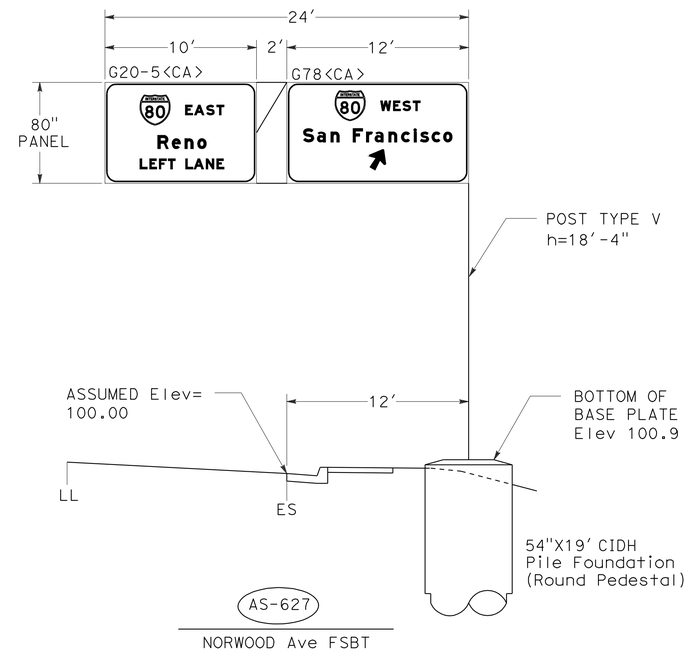

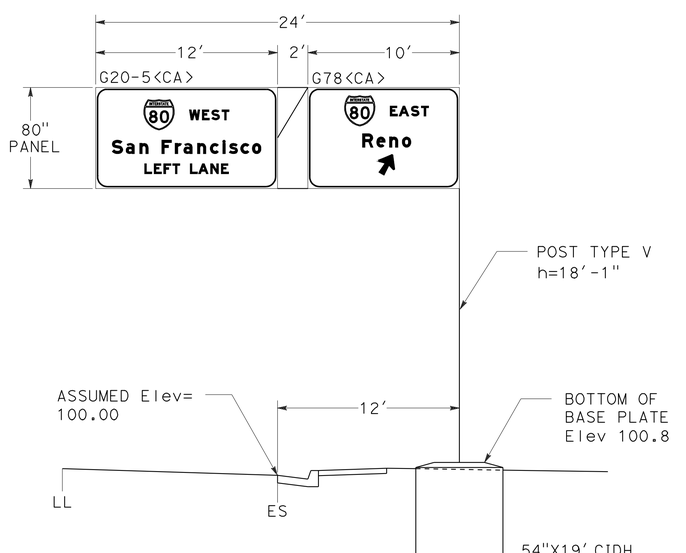

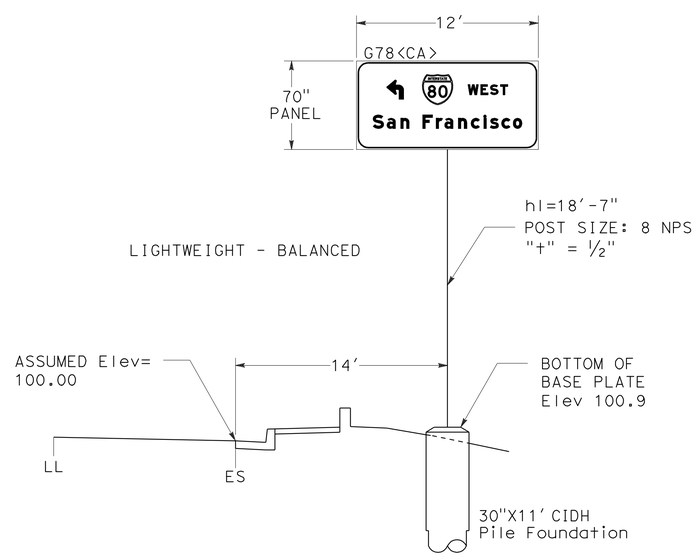

SIGN DETAILS

NO SCALE

SD-15

STATE OF CALIFORNIA - DEPARTMENT OF TRANSPORTATION
Caltrans
TRAFFIC

FUNCTIONAL SUPERVISOR: JOSEPH W. HORTON
CALCULATED-DESIGNED BY: JACK KEMMERLY
CHECKED BY: AC MURPHY
REVISED BY
DATE REVISED

LAST REVISION 3-8-10
DATE PLOTTED => 03-FEB-2011
TIME PLOTTED => 13:17

Dist	COUNTY	ROUTE	POST MILES TOTAL PROJECT	SHEET No.	TOTAL SHEETS
03	Yol,Sac	80	R10.9/R11.7, M0.0/M10.4	507	1012

REGISTERED CIVIL ENGINEER — DATE 6-14-10

9-7-10
PLANS APPROVAL DATE

REGISTERED PROFESSIONAL ENGINEER — A.C. Murphy No. 47645 Exp. 12-31-11 CIVIL — STATE OF CALIFORNIA

THE STATE OF CALIFORNIA OR ITS OFFICERS OR AGENTS SHALL NOT BE RESPONSIBLE FOR THE ACCURACY OR COMPLETENESS OF ELECTRONIC COPIES OF THIS PLAN SHEET.

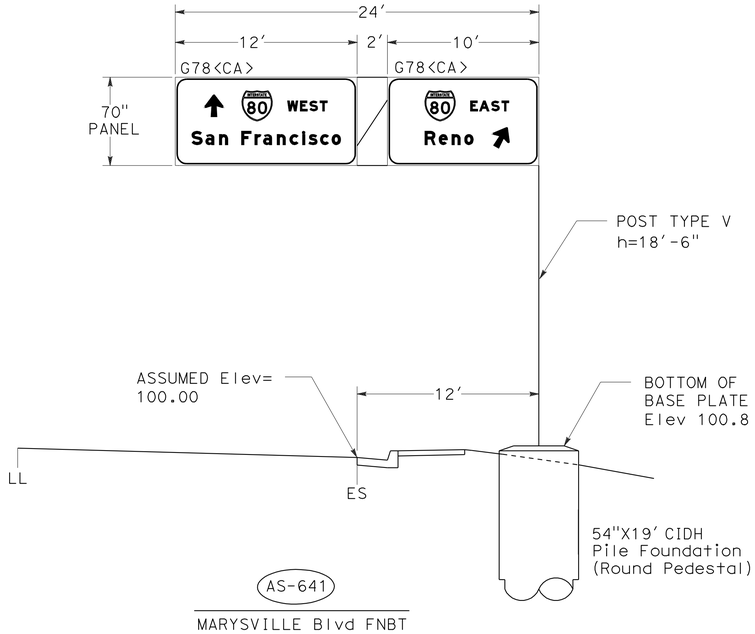

AS-641

MARYSVILLE Blvd FNBT

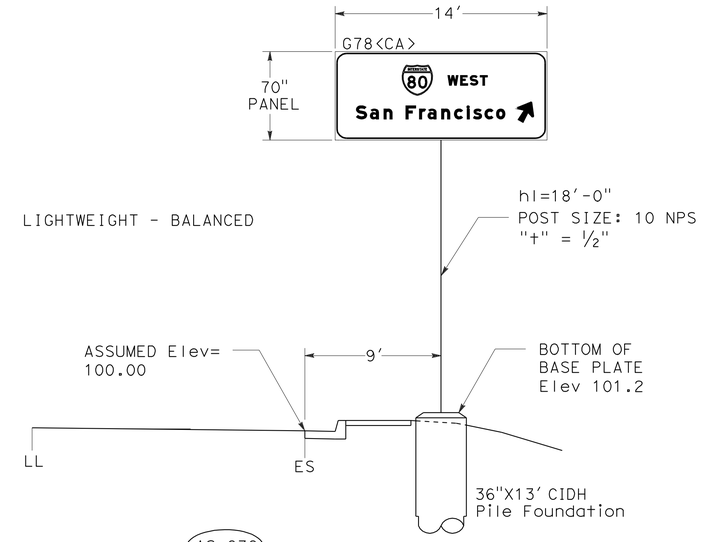

AS-636

MARYSVILLE Blvd FNBT

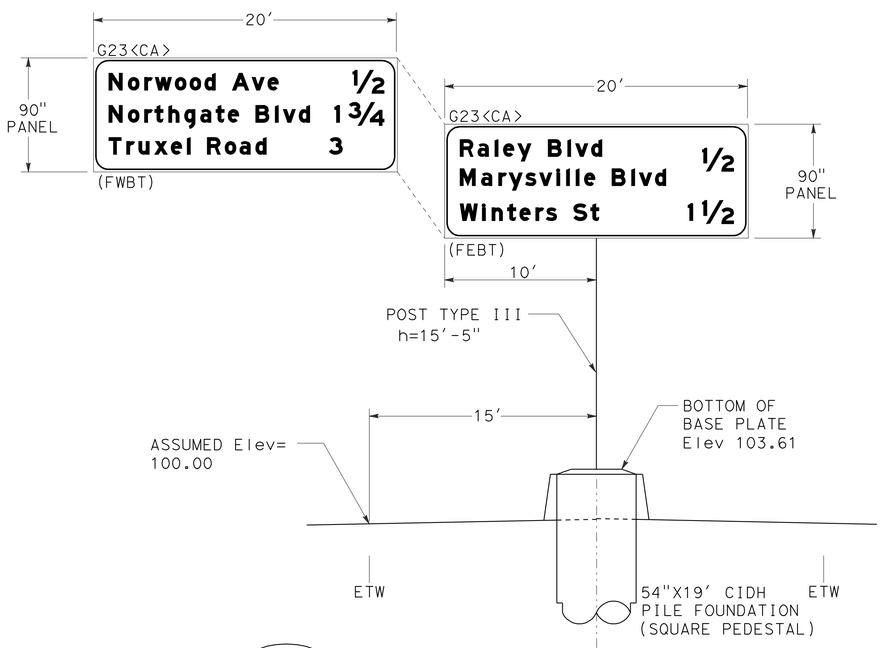

AS-626

Sta "A1" 584+00 FEBT & FWBT

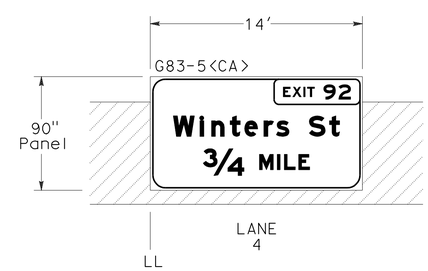

AS-156

BRIDGE MOUNTED SIGN (FEBT)

RALEY Blvd OC
Br No. 24-105
(SEE STRUCTURE PLANS FOR MOUNTING DETAILS)

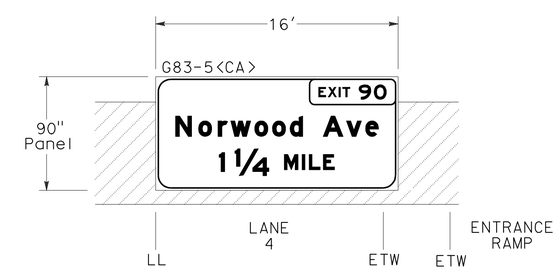

AS-157

BRIDGE MOUNTED SIGN (FWBT)

RALEY Blvd OC
Br No. 24-105
(SEE STRUCTURE PLANS FOR MOUNTING DETAILS)

SIGN DETAILS

NO SCALE

SD-16

STATE OF CALIFORNIA - DEPARTMENT OF TRANSPORTATION
Caltrans
TRAFFIC

FUNCTIONAL SUPERVISOR: JOSEPH W. HORTON

CALCULATED-DESIGNED BY: JACK KEMMERLY
CHECKED BY: AC MURPHY
REVISED BY
DATE REVISED

LAST REVISION 6-7-10
DATE PLOTTED => 03-FEB-2011
TIME PLOTTED => 13:17

Dist	COUNTY	ROUTE	POST MILES TOTAL PROJECT	SHEET No.	TOTAL SHEETS
03	Yol,Sac	80	R10.9/R11.7, M0.0/M10.4	508	1012

REGISTERED CIVIL ENGINEER 6-14-10 DATE

9-7-10
PLANS APPROVAL DATE

REGISTERED PROFESSIONAL ENGINEER A.C. Murphy No. 47645 Exp. 12-31-11 CIVIL STATE OF CALIFORNIA

THE STATE OF CALIFORNIA OR ITS OFFICERS OR AGENTS SHALL NOT BE RESPONSIBLE FOR THE ACCURACY OR COMPLETENESS OF ELECTRONIC COPIES OF THIS PLAN SHEET.

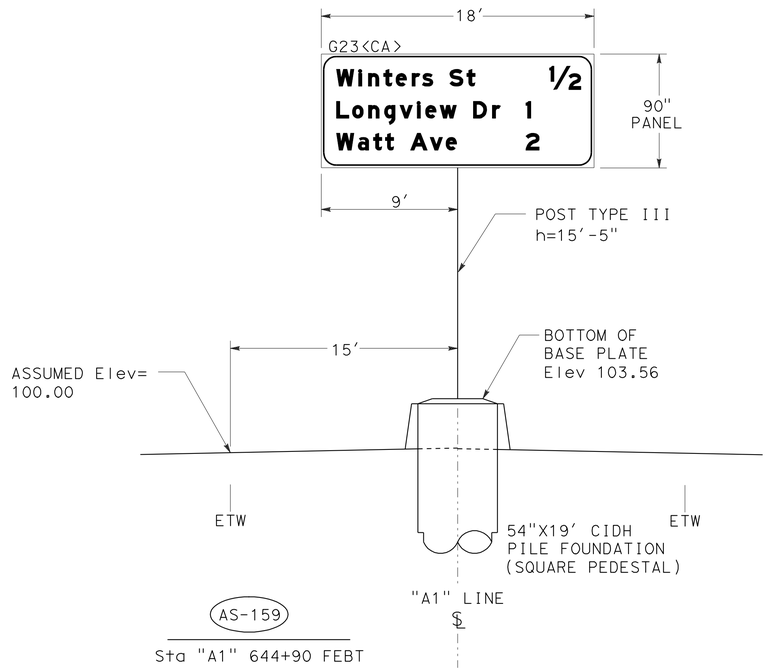

AS-159

Sta "A1" 644+90 FEBT

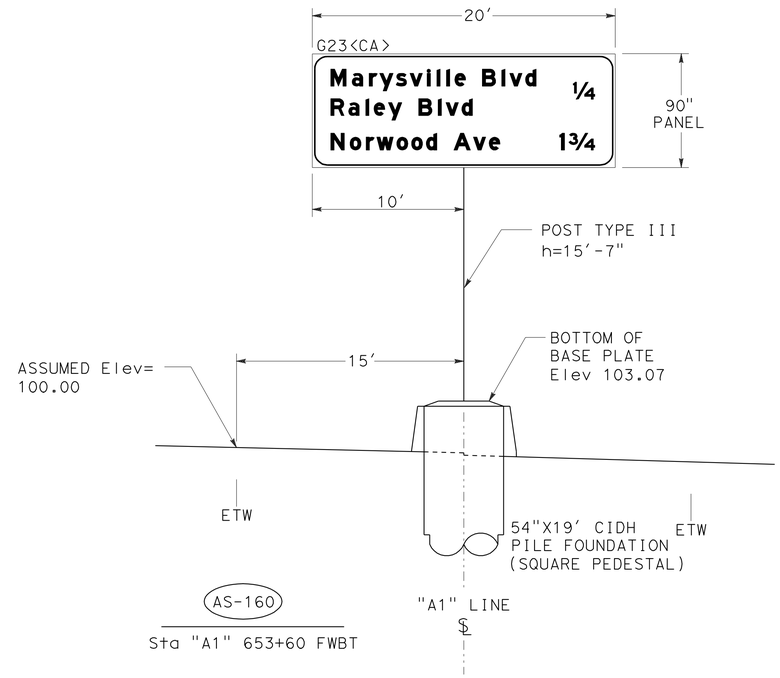

AS-160

Sta "A1" 653+60 FWBT

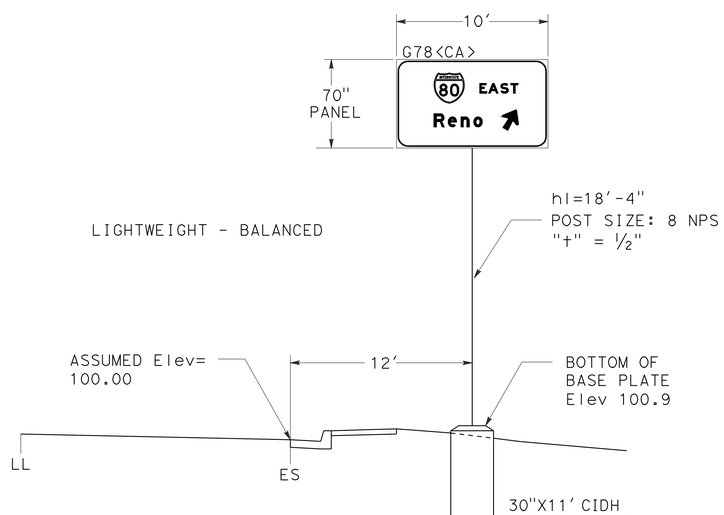

AS-634

RALEY Blvd FSBT

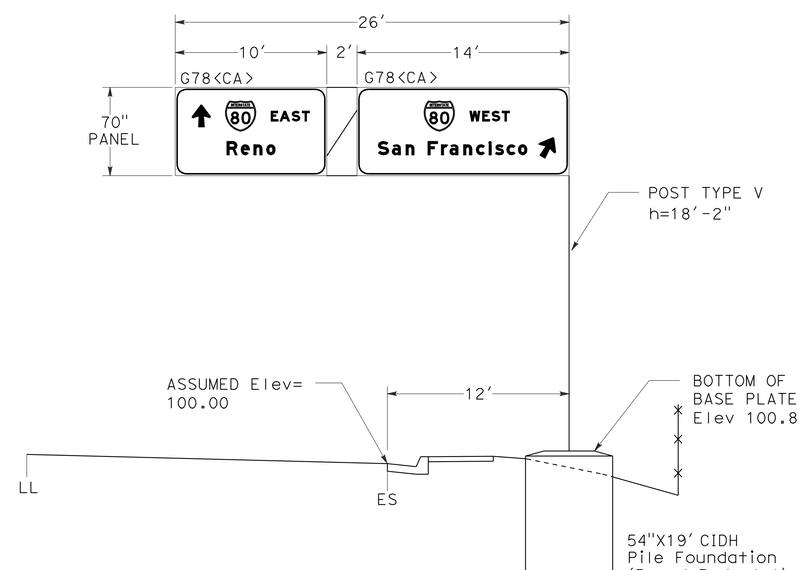

AS-625

RALEY Blvd FSBT

SIGN DETAILS

NO SCALE

SD-17

STATE OF CALIFORNIA - DEPARTMENT OF TRANSPORTATION

Caltrans

TRAFFIC

FUNCTIONAL SUPERVISOR: JOSEPH W. HORTON

CALCULATED-DESIGNED BY: JACK KEMMERLY

CHECKED BY: AC MURPHY

REVISED BY

DATE REVISED

LAST REVISION 3-8-10

DATE PLOTTED => 03-FEB-2011
TIME PLOTTED => 13:17

Dist	COUNTY	ROUTE	POST MILES TOTAL PROJECT	SHEET No.	TOTAL SHEETS
03	Yol,Sac	80	R10.9/R11.7, M0.0/M10.4	509	1012

REGISTERED CIVIL ENGINEER 6-14-10 DATE

9-7-10
PLANS APPROVAL DATE

REGISTERED PROFESSIONAL ENGINEER A.C. Murphy No. 47645 Exp. 12-31-11 CIVIL STATE OF CALIFORNIA

THE STATE OF CALIFORNIA OR ITS OFFICERS OR AGENTS SHALL NOT BE RESPONSIBLE FOR THE ACCURACY OR COMPLETENESS OF ELECTRONIC COPIES OF THIS PLAN SHEET.

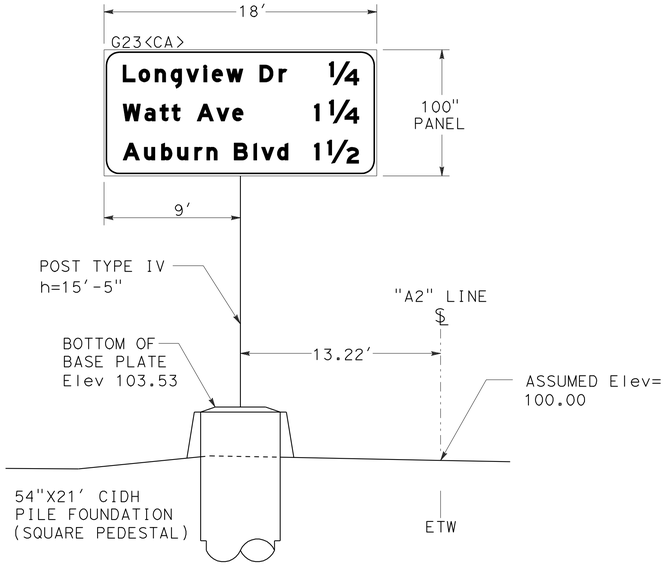

AS-623

Sta "A2" 688+00 FEBT

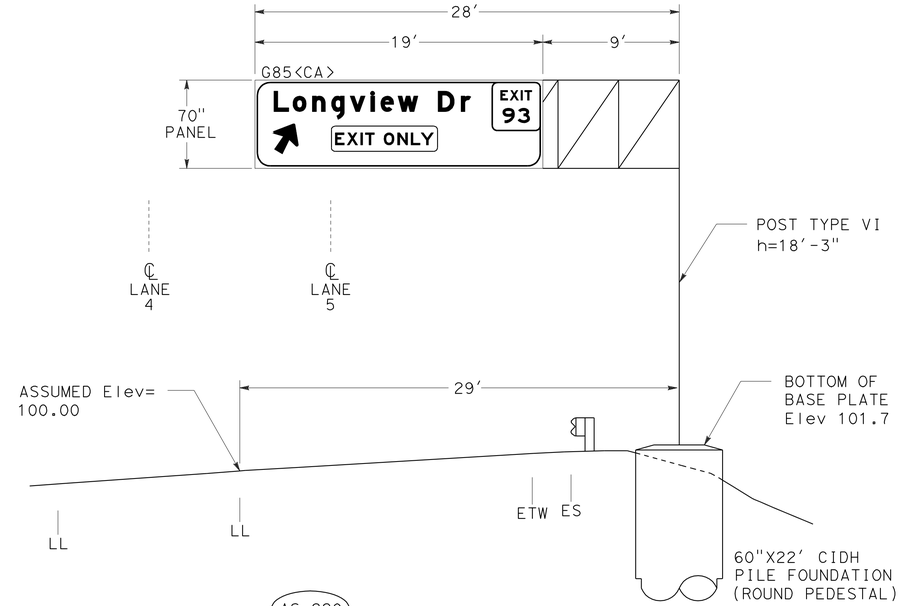

AS-220

Sta "A2" 702+25 FEBT

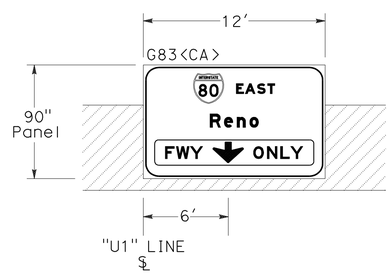

AS-607

BRIDGE MOUNTED SIGN (FSBT)

WINTERS St UC
Br No. 24-205L
(SEE STRUCTURE PLANS FOR MOUNTING DETAILS)

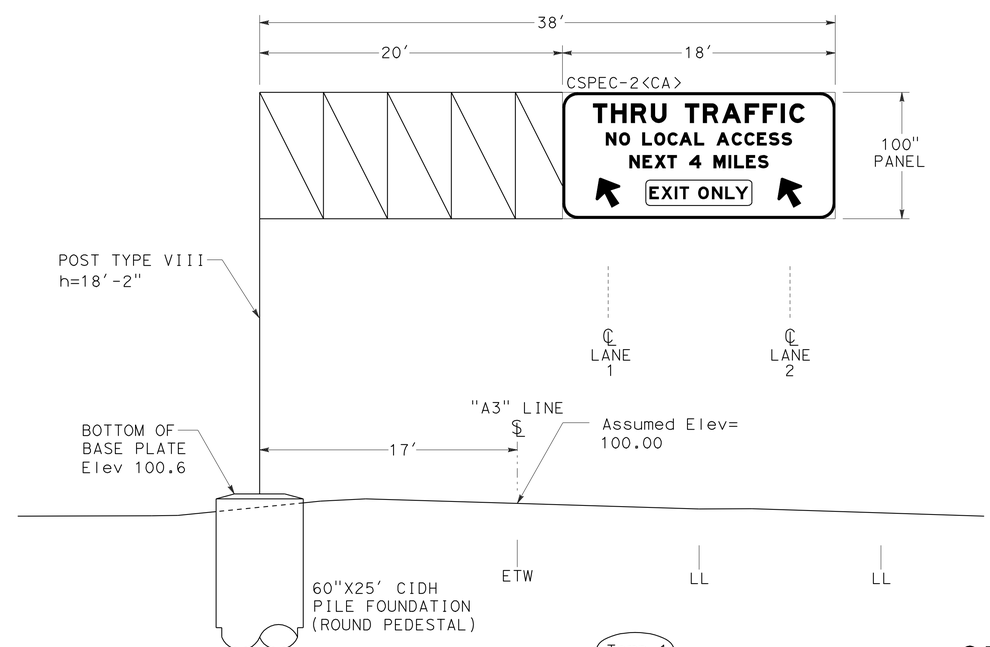

Temp-1

Sta "A3" 688+75 FWBT
(SEE SHEET SC-153)

SIGN DETAILS

NO SCALE

SD-18

STATE OF CALIFORNIA - DEPARTMENT OF TRANSPORTATION
Caltrans®
TRAFFIC

FUNCTIONAL SUPERVISOR: JOSEPH W. HORTON
CALCULATED-DESIGNED BY: JACK KEMMERLY
CHECKED BY: AC MURPHY
REVISED BY
DATE REVISED

LAST REVISION 6-7-10
DATE PLOTTED => 03-FEB-2011
TIME PLOTTED => 13:17

Dist	COUNTY	ROUTE	POST MILES TOTAL PROJECT	SHEET No.	TOTAL SHEETS
03	Yol,Sac	80	R10.9/R11.7, M0.0/M10.4	510	1012

REGISTERED CIVIL ENGINEER — DATE 6-14-10

9-7-10
PLANS APPROVAL DATE

REGISTERED PROFESSIONAL ENGINEER — A.C. Murphy — No. 47645 — Exp. 12-31-11 — CIVIL — STATE OF CALIFORNIA

THE STATE OF CALIFORNIA OR ITS OFFICERS OR AGENTS SHALL NOT BE RESPONSIBLE FOR THE ACCURACY OR COMPLETENESS OF ELECTRONIC COPIES OF THIS PLAN SHEET.

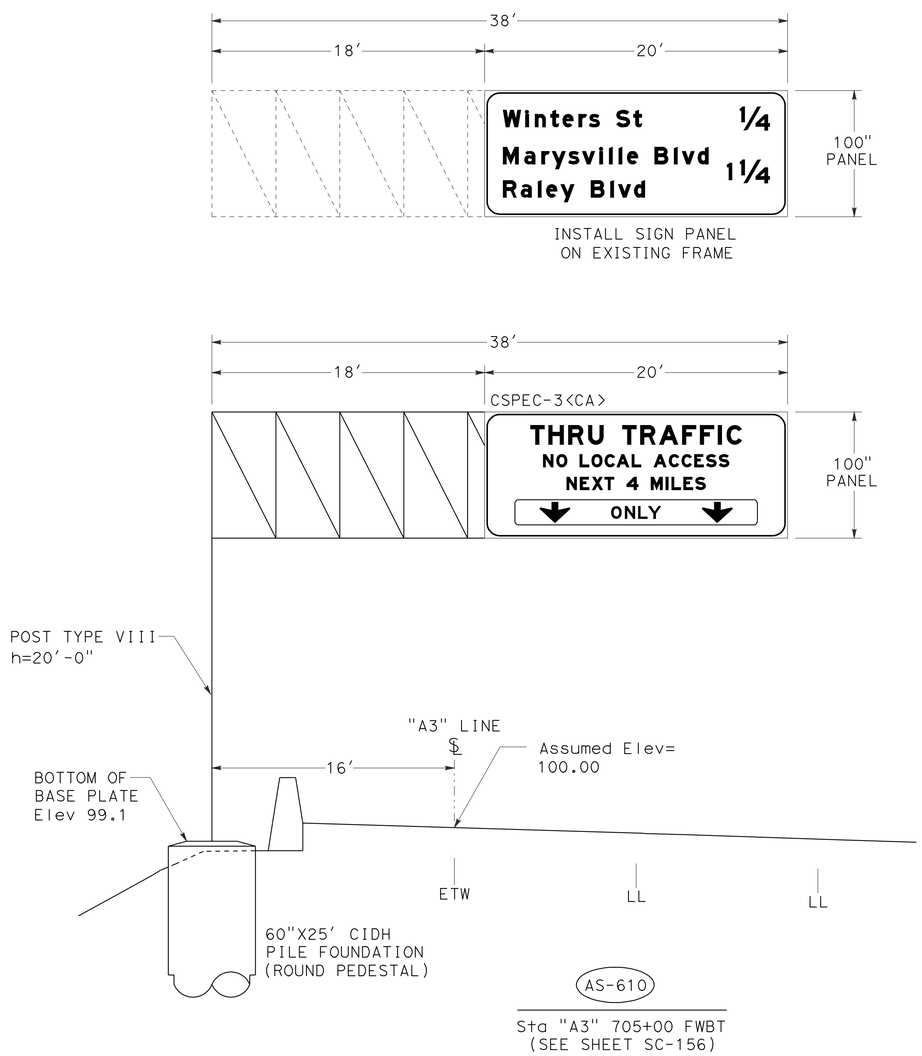

NOTE: Temp-1 BECOMES AS-624 AFTER RELOCATION.

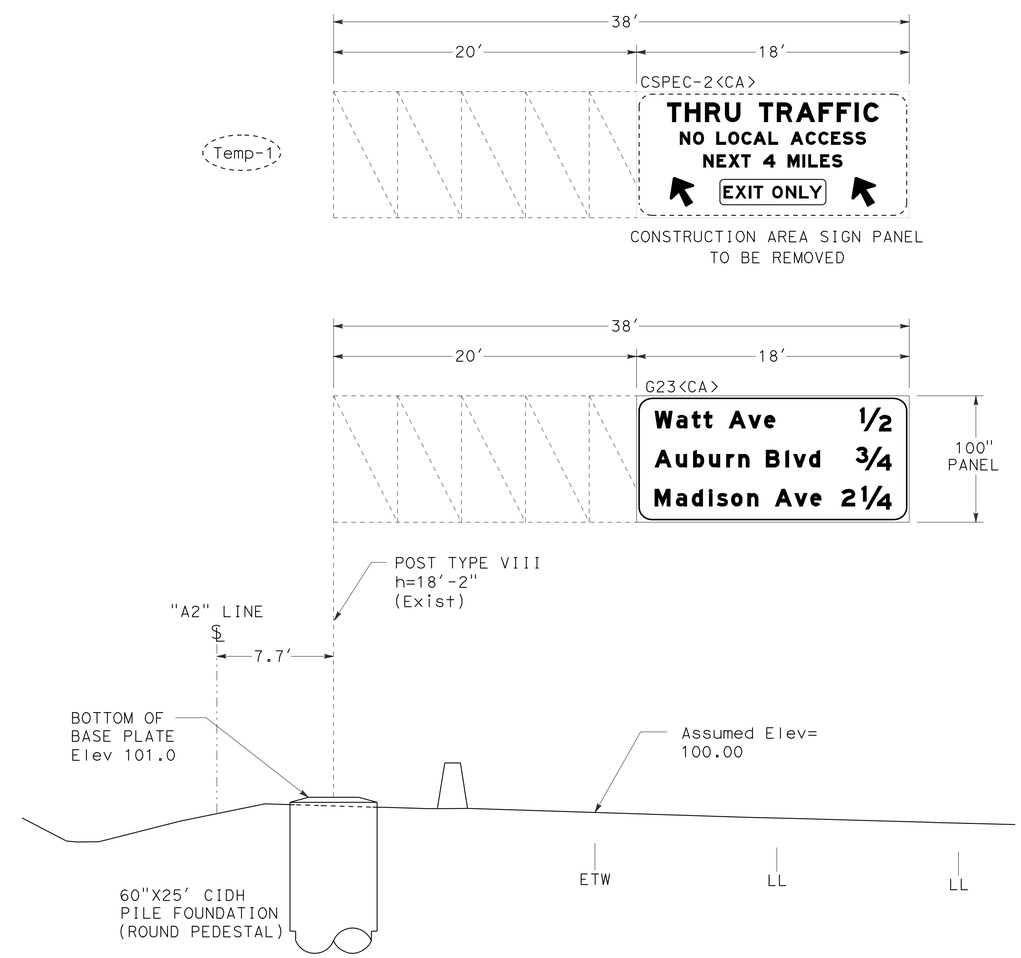

SIGN DETAILS

NO SCALE

SD-19

STATE OF CALIFORNIA - DEPARTMENT OF TRANSPORTATION
Caltrans
TRAFFIC

FUNCTIONAL SUPERVISOR: JOSEPH W. HORTON
CALCULATED-DESIGNED BY: JACK KEMMERLY
CHECKED BY: AC MURPHY
REVISED BY
DATE REVISED

LAST REVISION 5-17-10
DATE PLOTTED => 03-FEB-2011
TIME PLOTTED => 13:17

Dist	COUNTY	ROUTE	POST MILES TOTAL PROJECT	SHEET No.	TOTAL SHEETS
03	Yol,Sac	80	R10.9/R11.7, M0.0/M10.4	511	1012

REGISTERED CIVIL ENGINEER — DATE 6-14-10

9-7-10
PLANS APPROVAL DATE

REGISTERED PROFESSIONAL ENGINEER — A.C. Murphy No. 47645 Exp. 12-31-11 CIVIL — STATE OF CALIFORNIA

THE STATE OF CALIFORNIA OR ITS OFFICERS OR AGENTS SHALL NOT BE RESPONSIBLE FOR THE ACCURACY OR COMPLETENESS OF ELECTRONIC COPIES OF THIS PLAN SHEET.

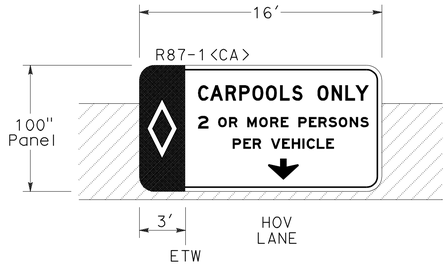

AS-608

BRIDGE MOUNTED SIGN (FWBT)
WATT Ave OC
Br No. 24-290
(SEE STRUCTURE PLANS FOR MOUNTING DETAILS)

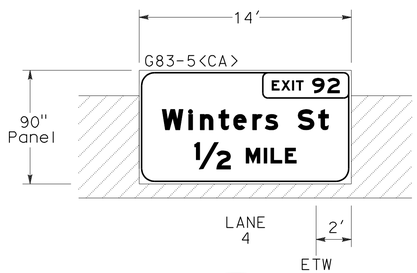

AS-216

BRIDGE MOUNTED SIGN (FWBT)
LONGVIEW Dr OC
Br No. 24-283
(SEE STRUCTURE PLANS FOR MOUNTING DETAILS)

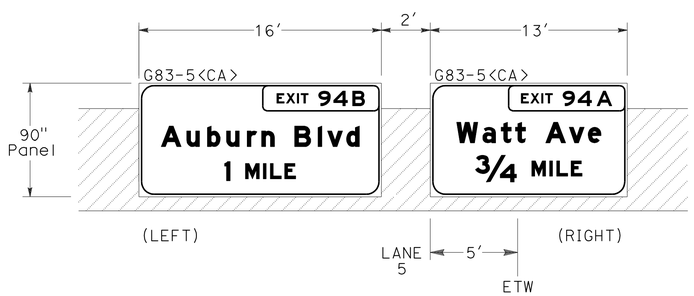

AS-215

BRIDGE MOUNTED SIGN (FWBT)
LONGVIEW Dr OC
Br No. 24-283
(SEE STRUCTURE PLANS FOR MOUNTING DETAILS)

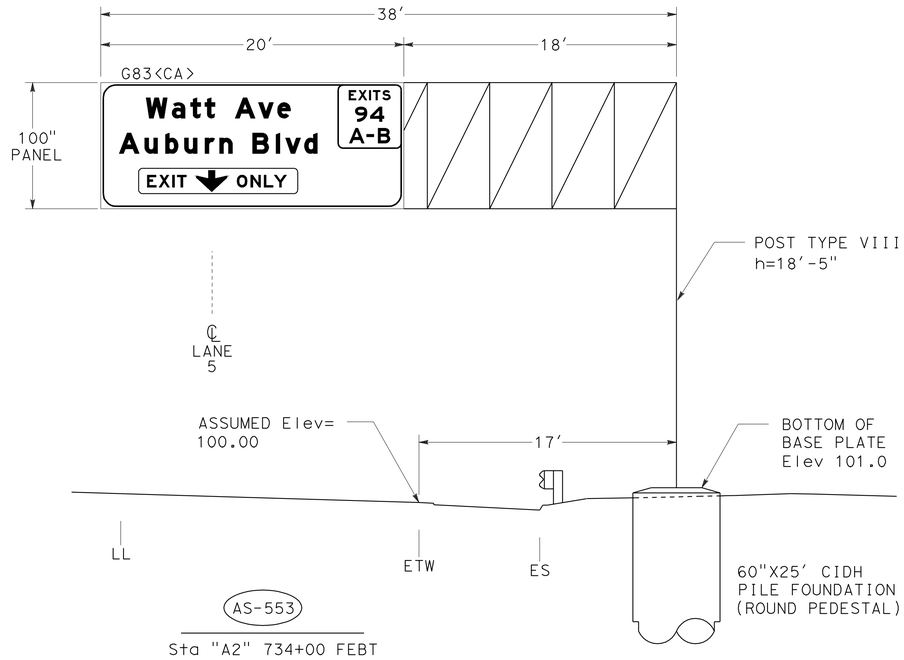

AS-553

Sta "A2" 734+00 FEBT

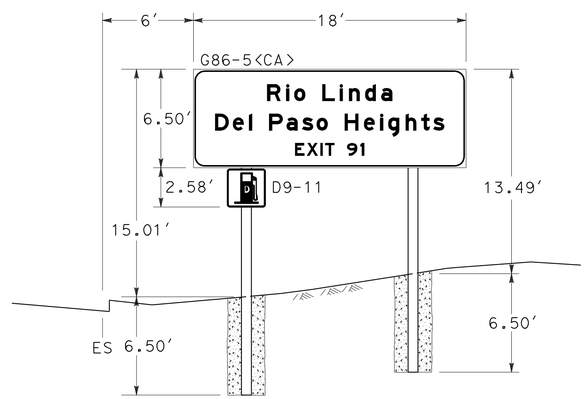

29-5

Sta "A1" 584+50 FEBT
TYPE L POST

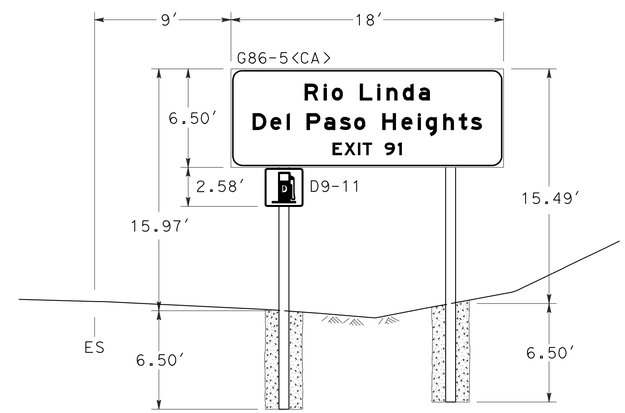

35-1

Sta "A1" 659+50 FWBT
TYPE L POST

SIGN DETAILS

NO SCALE

SD-20

STATE OF CALIFORNIA - DEPARTMENT OF TRANSPORTATION
TRAFFIC
FUNCTIONAL SUPERVISOR: JOSEPH W. HORTON
CALCULATED-DESIGNED BY: JACK KEMMERLY
CHECKED BY: AC MURPHY
REVISED BY
DATE REVISED

LAST REVISION 6-7-10
DATE PLOTTED => 03-FEB-2011
TIME PLOTTED => 13:17

Dist	COUNTY	ROUTE	POST MILES TOTAL PROJECT	SHEET No.	TOTAL SHEETS
03	Yol,Sac	80	R10.9/R11.7, MO.0/M10.4	512	1012

REGISTERED CIVIL ENGINEER — DATE 6-14-10

9-7-10
PLANS APPROVAL DATE

REGISTERED PROFESSIONAL ENGINEER — A.C. Murphy — No. 47645 — Exp. 12-31-11 — CIVIL — STATE OF CALIFORNIA

THE STATE OF CALIFORNIA OR ITS OFFICERS OR AGENTS SHALL NOT BE RESPONSIBLE FOR THE ACCURACY OR COMPLETENESS OF ELECTRONIC COPIES OF THIS PLAN SHEET.

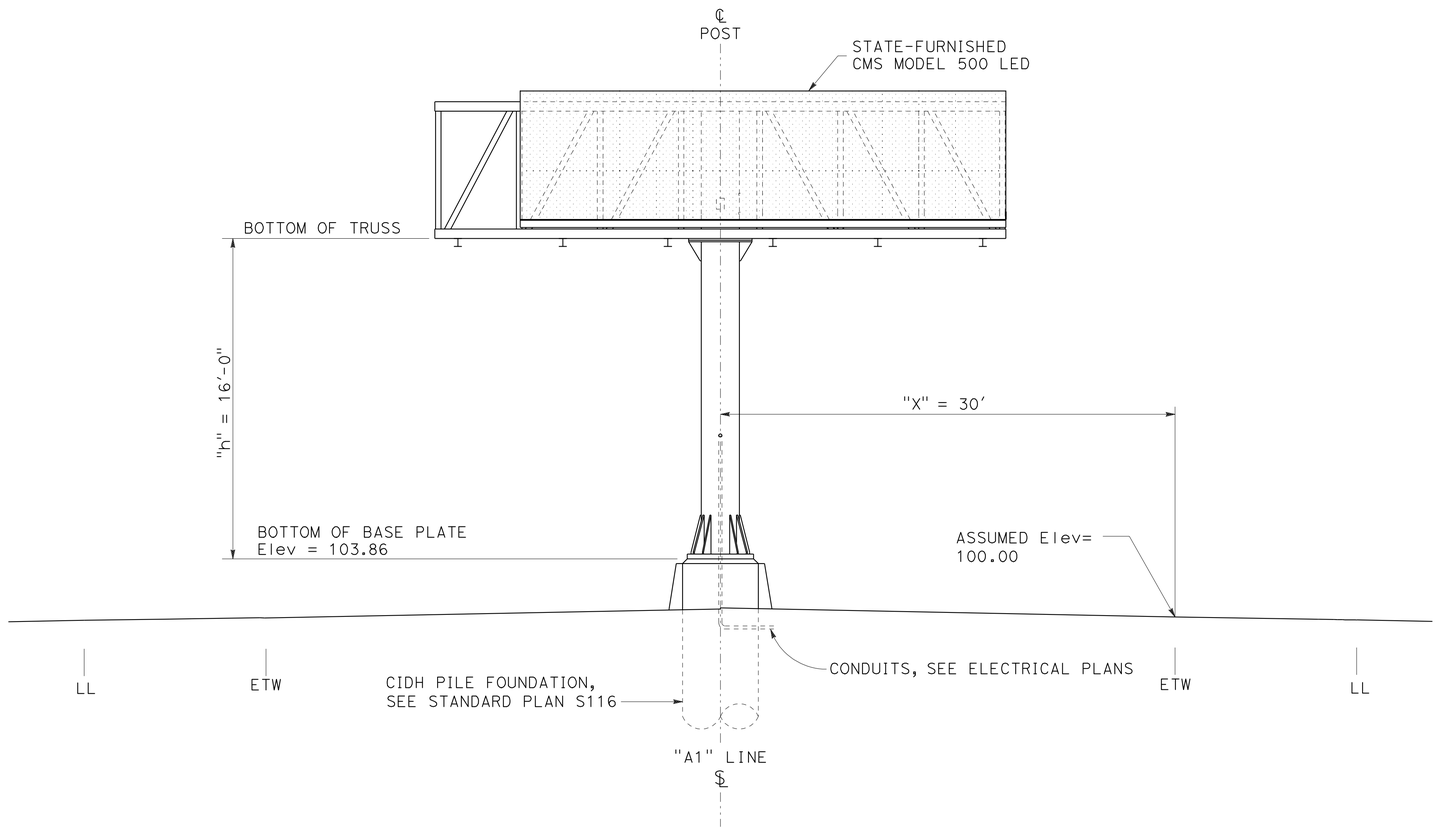

CHANGEABLE MESSAGE SIGN

BALANCED BUTTERFLY - MODEL 500
Sta "A1" 245+00 FEBT

SEE STANDARD PLAN S105 FOR ADDITIONAL INFORMATION

SIGN DETAILS

NO SCALE

SD-21

STATE OF CALIFORNIA - DEPARTMENT OF TRANSPORTATION
Caltrans®
TRAFFIC

FUNCTIONAL SUPERVISOR: JOSEPH W. HORTON
CALCULATED-DESIGNED BY: JACK KEMMERLY
CHECKED BY: AC MURPHY
REVISED BY
DATE REVISED

LAST REVISION 6-10-10
DATE PLOTTED => 03-FEB-2011
TIME PLOTTED => 13:17

DIST	COUNTY	ROUTE	POST MILES TOTAL PROJECT	SHEET No	TOTAL SHEETS
03	Yol,Sac	80	R10.9/R11.7, M0.0/M10.4	513	1012

REGISTERED CIVIL ENGINEER 6/10/10 DATE

9-7-10
PLANS APPROVAL DATE

REGISTERED PROFESSIONAL ENGINEER
ANDREW BUI
No. C63560
Exp. 9/30/10
CIVIL
STATE OF CALIFORNIA

The State of California or its officers or agents shall not be responsible for the accuracy or completeness of electronic copies of this plan sheet.

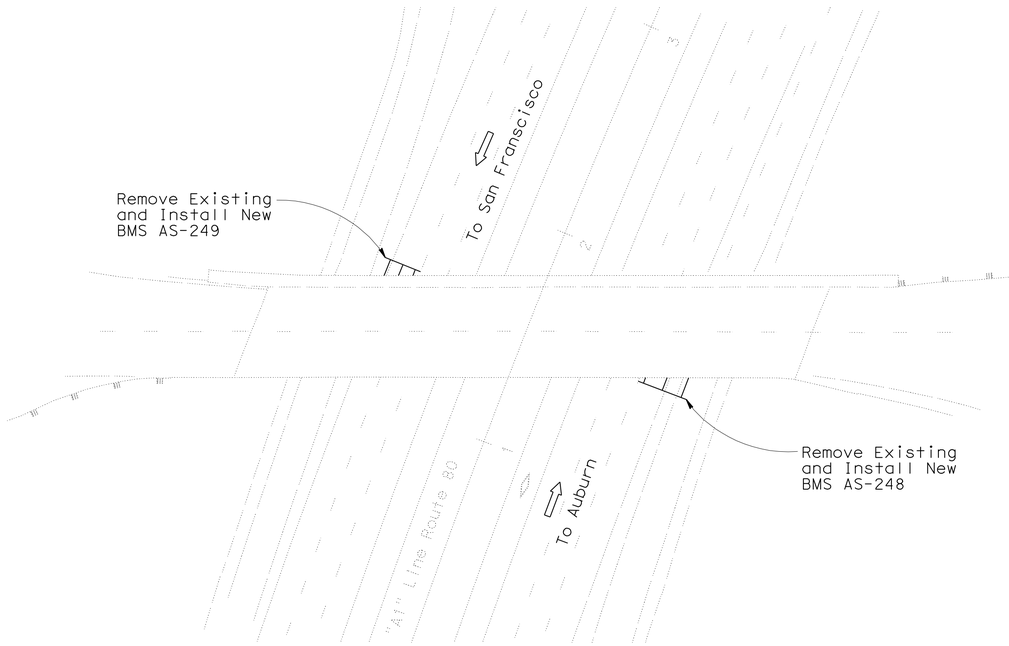

LOCATION PLAN

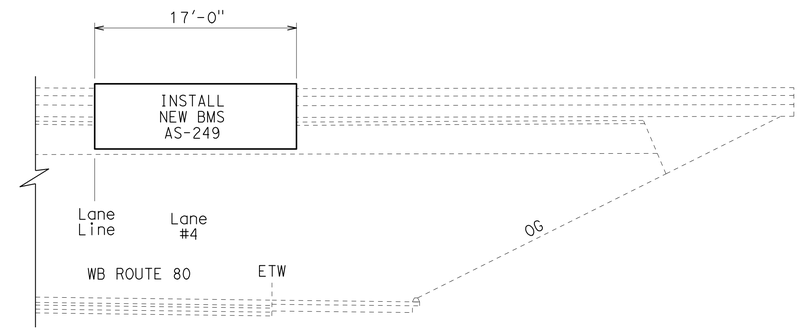

WB ELEVATION

WEST EL CAMINO AVE OC
Bridge No. 24-0249

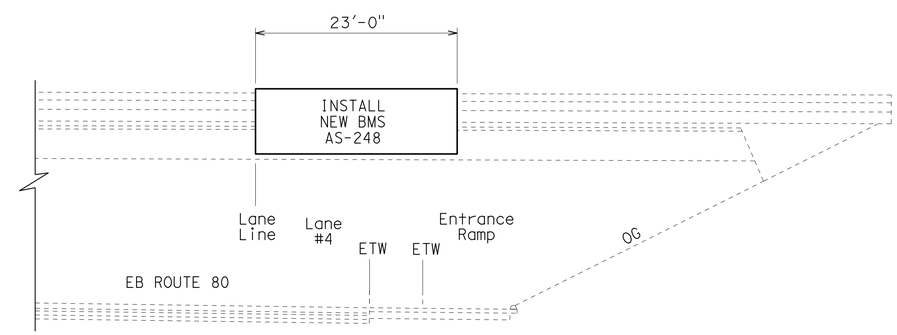

EB ELEVATION

WEST EL CAMINO AVE OC
Bridge No. 24-0249

LEGEND

Existing structure.

New structure.

STANDARD PLANS DATED MAY 2006

A10A ACRONYMS AND ABBREVIATIONS (A-L)
A10B ACRONYMS AND ABBREVIATIONS (M-Z)

Notes:

1. For details not shown, see "STANDARD PLANS MAY 2006".
2. Unless otherwise shown, all steel shall be galvanized after fabrication.
3. Min size fillet weld is 1/4" or thickness of thinner part unless noted otherwise.
4. Contractor to provide anchor bolt layout before anchor bolts are placed.
5. For sign location, see "PAVEMENT DELINEATION AND SIGN PLANS".

NOTE:
THE CONTRACTOR SHALL VERIFY ALL CONTROLLING FIELD DIMENSIONS BEFORE ORDERING OR FABRICATING ANY MATERIAL.

BRANCH CHIEF Jeffrey B Woody	DESIGN	BY A GUTIERREZ	CHECKED S VU
	DETAILS	BY D W JUSTICE Jr	CHECKED A GUTIERREZ
	QUANTITIES	BY A GUTIERREZ	CHECKED S VU

STATE OF CALIFORNIA
DEPARTMENT OF TRANSPORTATION

DIVISION OF ENGINEERING SERVICES
DESIGN AND TECHNICAL SERVICES
SPECIAL DESIGNS BRANCH A

BRIDGE NO. 24-0249
POST MILE –

WEST EL CAMINO OVERCROSSING
BRIDGE MOUNTED SIGN (BMS) SKEWED LOCATION PLAN

SDS-1

(ENGLISH) SPECIAL DESIGNS BRANCH BORDER SHEET (REV. 7-1-09)

ORIGINAL SCALE IN INCHES FOR REDUCED PLANS 0 1 2 3

CU 03
EA 379701

DISREGARD PRINTS BEARING EARLIER REVISION DATES

REVISION DATES: 5-28-10 6-14-10

SHEET OF

FILE => spec_des_br_prj/2009sd/03-379701/sds1-westelcamino.dgn

USERNAME => trmikest DATE PLOTTED => 03-FEB-2011 TIME PLOTTED => 08:57

DIST	COUNTY	ROUTE	POST MILES TOTAL PROJECT	SHEET No	TOTAL SHEETS
03	Yol,Sac	80	R10.9/R11.7, M0.0/M10.4	514	1012

REGISTERED CIVIL ENGINEER 6/10/10 DATE

9-7-10
PLANS APPROVAL DATE

REGISTERED PROFESSIONAL ENGINEER ANDREW BUI No. C63560 Exp. 9/30/10 CIVIL STATE OF CALIFORNIA

The State of California or its officers or agents shall not be responsible for the accuracy or completeness of electronic copies of this plan sheet.

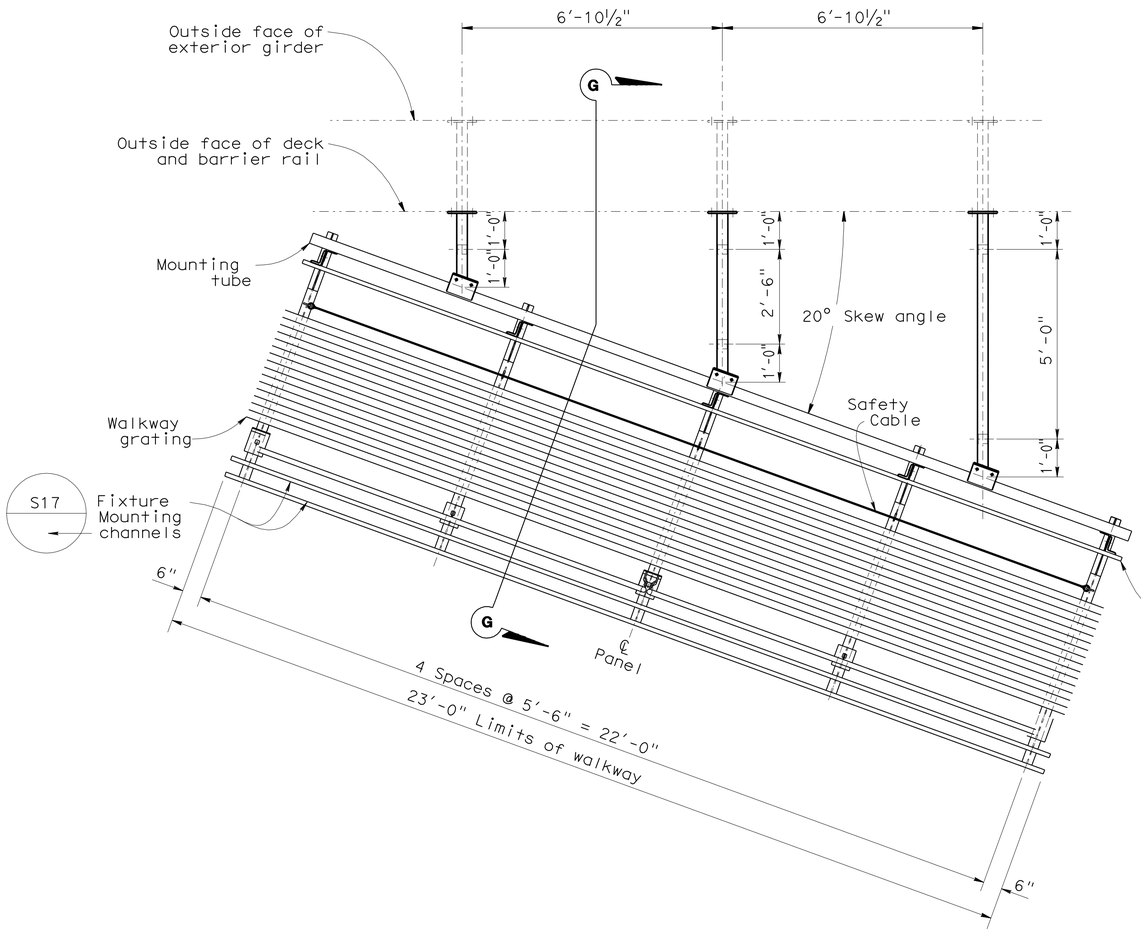

LAYOUT FEBT SIGN AS-248

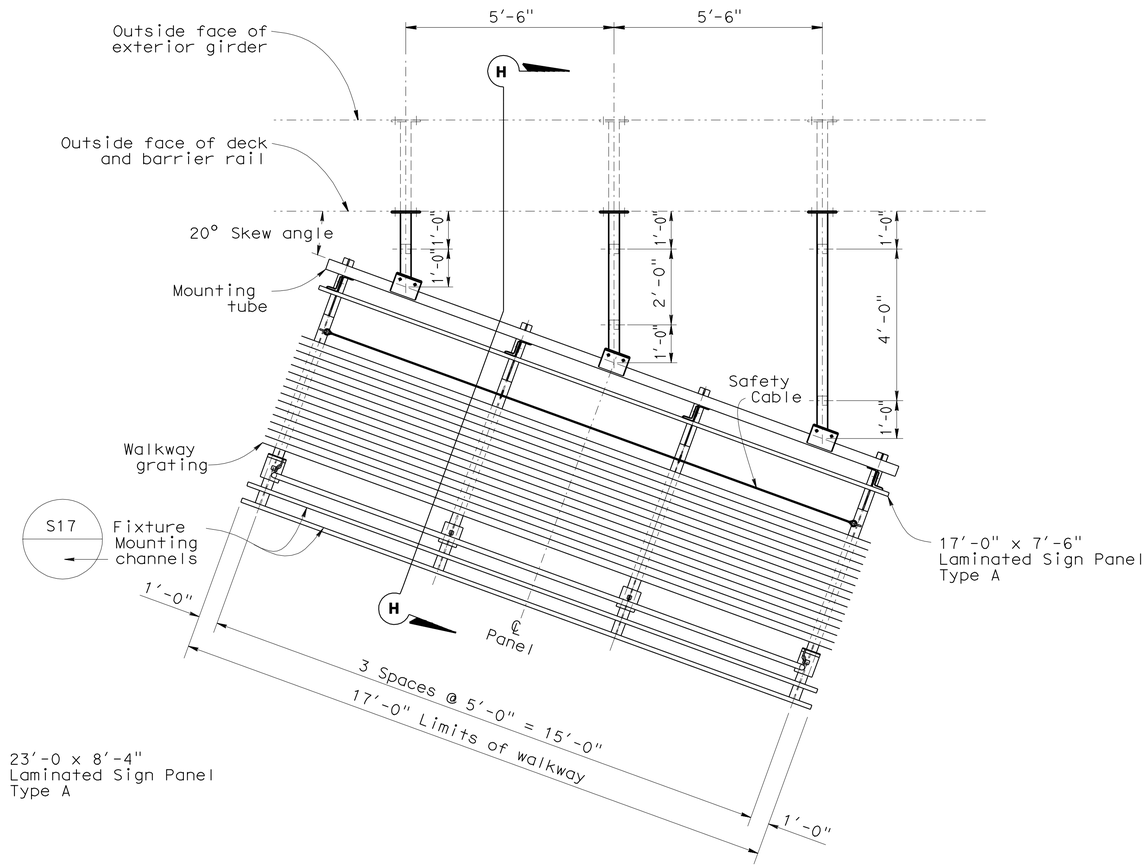

LAYOUT FWBT SIGN AS-249

NOTE:
THE CONTRACTOR SHALL VERIFY ALL CONTROLLING FIELD DIMENSIONS BEFORE ORDERING OR FABRICATING ANY MATERIAL.

BRANCH CHIEF Jeffrey B Woody

	BY	CHECKED
DESIGN	A GUTIERREZ	S VU
DETAILS	D W JUSTICE Jr	A GUTIERREZ
QUANTITIES	A GUTIERREZ	S VU

STATE OF CALIFORNIA
DEPARTMENT OF TRANSPORTATION

DIVISION OF ENGINEERING SERVICES
DESIGN AND TECHNICAL SERVICES
SPECIAL DESIGNS BRANCH A

BRIDGE NO. 24-0249
POST MILE –

WEST EL CAMINO OVERCROSSING
BRIDGE MOUNTED SIGN (BMS) SKEWED LAYOUT

SDS-2

(ENGLISH) SPECIAL DESIGNS BRANCH BORDER SHEET (REV. 7-1-09)

ORIGINAL SCALE IN INCHES FOR REDUCED PLANS 0 1 2 3

CU 03
EA 379701

DISREGARD PRINTS BEARING EARLIER REVISION DATES → 5-26-10 6-14-10

REVISION DATES | SHEET | OF

FILE => spec_des_br_prj/2009sd/03-379701/sds2-westelcamino.dgn

USERNAME => trmikesl DATE PLOTTED => 03-FEB-2011 TIME PLOTTED => 08:57

DIST	COUNTY	ROUTE	POST MILES TOTAL PROJECT	SHEET No	TOTAL SHEETS
03	Yol,Sac	80	R10.9/R11.7, M0.0/M10.4	515	1012

REGISTERED CIVIL ENGINEER 6/10/10 DATE

9-7-10
PLANS APPROVAL DATE

REGISTERED PROFESSIONAL ENGINEER ANDREW BUI No. C63560 Exp. 9/30/10 CIVIL STATE OF CALIFORNIA

The State of California or its officers or agents shall not be responsible for the accuracy or completeness of electronic copies of this plan sheet.

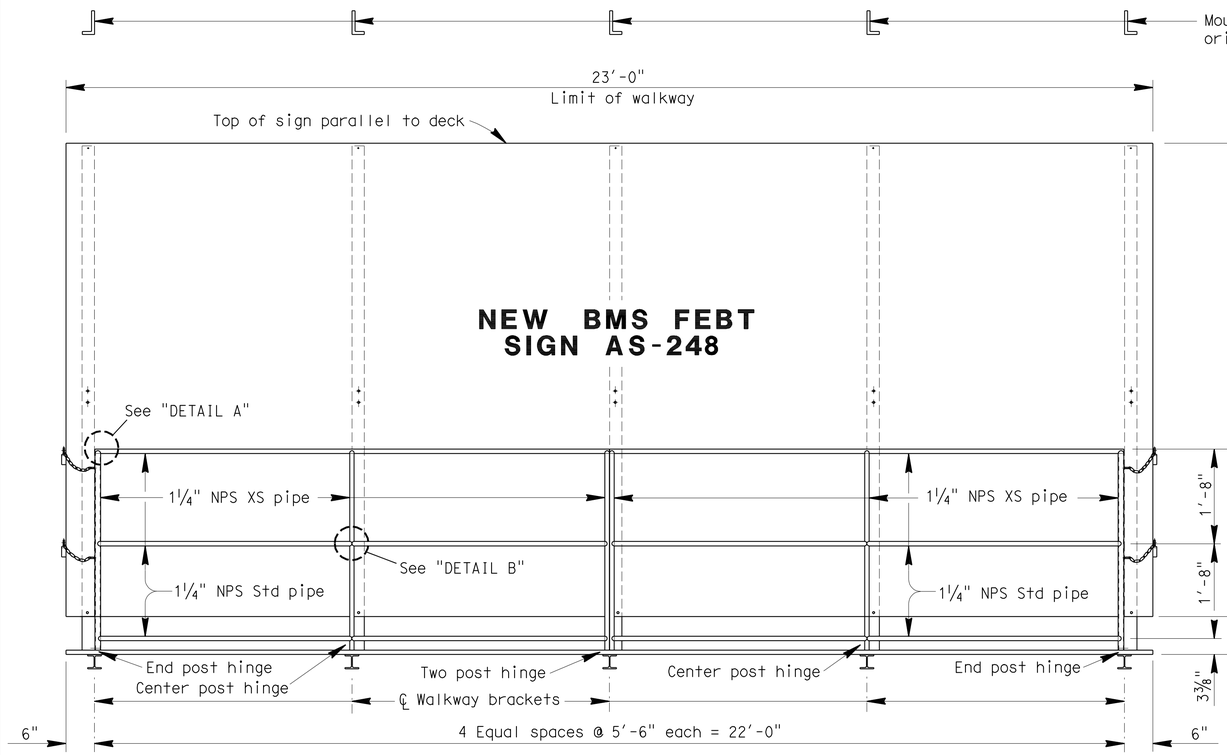

FRONT VIEW

NOTES:

1. Special care shall be taken to insure that the complete hinge and latch assembly will hold the safety railing in a steady manner, free of wobble while in the raised position. Max allowable displacement from vertical at top of railing when latched shall be 1".
2. Safety chain shall be ¼" galvanized steel coil chain, approximately 12 links per foot. Length shall be min which allows lock-up of safety railing. Min of two safety chains per safety railing. Grade 43 high test chain ASTM A413.
3. For details not shown, see "BRIDGE MOUNTED SIGN TYPICAL DETAILS NO.1", "BRIDGE MOUNTED SIGN TYPICAL DETAILS NO.2", "BRIDGE MOUNTED SIGN TYPICAL DETAILS NO.3", and "BRIDGE MOUNTED SIGN TYPICAL DETAILS NO.4".
4. All high strength (HS) bolts shall be snug tightened.
5. Structure shall be galvanized after fabrication. ¾" Diameter holes in underside of tubing may be added by Contractor to permit draining of galvanizing. Drain hole shall not interfere with welds.
6. Safety chain is located at the ends of the walkway only, but is shown here for clarity.

NOTE:
THE CONTRACTOR SHALL VERIFY ALL CONTROLLING FIELD DIMENSIONS BEFORE ORDERING OR FABRICATING ANY MATERIAL.

STANDARD PLAN SHEET NO.
DETAIL NO.

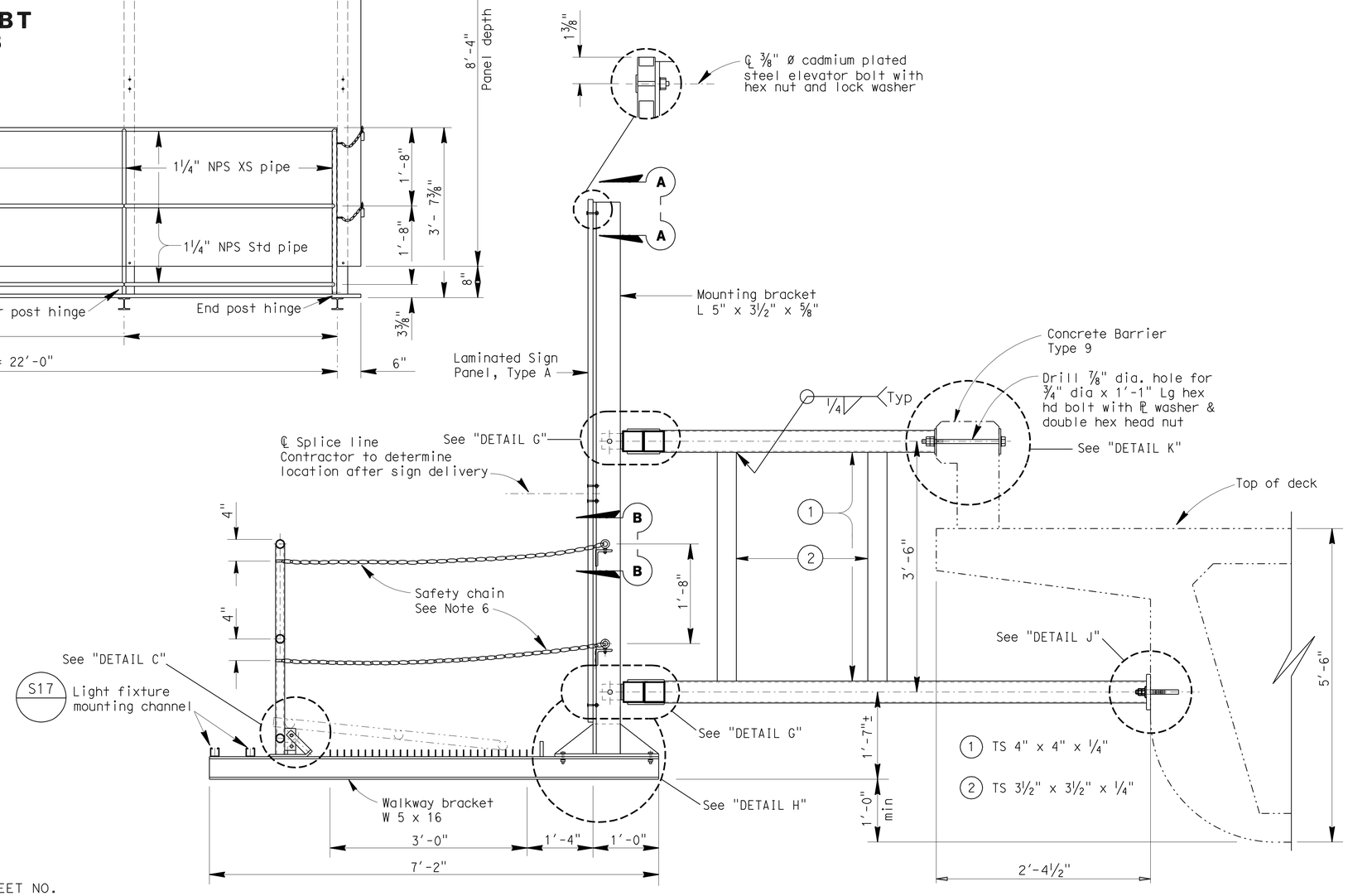

SECTION G-G

No Scale

BRANCH CHIEF Jeffrey B Woody	DESIGN	BY A GUTIERREZ	CHECKED S VU
	DETAILS	BY D W JUSTICE Jr	CHECKED A GUTIERREZ
	QUANTITIES	BY A GUTIERREZ	CHECKED S VU

STATE OF CALIFORNIA
DEPARTMENT OF TRANSPORTATION

DIVISION OF ENGINEERING SERVICES
DESIGN AND TECHNICAL SERVICES
SPECIAL DESIGNS BRANCH A

BRIDGE NO. 24-0249
POST MILE –

WEST EL CAMINO OVERCROSSING
BRIDGE MOUNTED SIGN (BMS) SKEWED TYPICAL SECTION

SDS-3

(ENGLISH) SPECIAL DESIGNS BRANCH BORDER SHEET (REV. 7-1-09)

ORIGINAL SCALE IN INCHES FOR REDUCED PLANS 0 1 2 3

CU 03
EA 379701

DISREGARD PRINTS BEARING EARLIER REVISION DATES 5-28-10 6-14-10

REVISION DATES | SHEET | OF

FILE => spec_des_br_prj/2009sd/03-379701/sds3-westelcamino.dgn

USERNAME => trmikesl DATE PLOTTED => 03-FEB-2011 TIME PLOTTED => 08:57

DIST	COUNTY	ROUTE	POST MILES TOTAL PROJECT	SHEET No	TOTAL SHEETS
03	Yol,Sac	80	R10.9/R11.7, M0.0/M10.4	516	1012

REGISTERED CIVIL ENGINEER 6/10/10 DATE

9-7-10
PLANS APPROVAL DATE

REGISTERED PROFESSIONAL ENGINEER ANDREW BUI No. C63560 Exp. 9/30/10 CIVIL STATE OF CALIFORNIA

The State of California or its officers or agents shall not be responsible for the accuracy or completeness of electronic copies of this plan sheet.

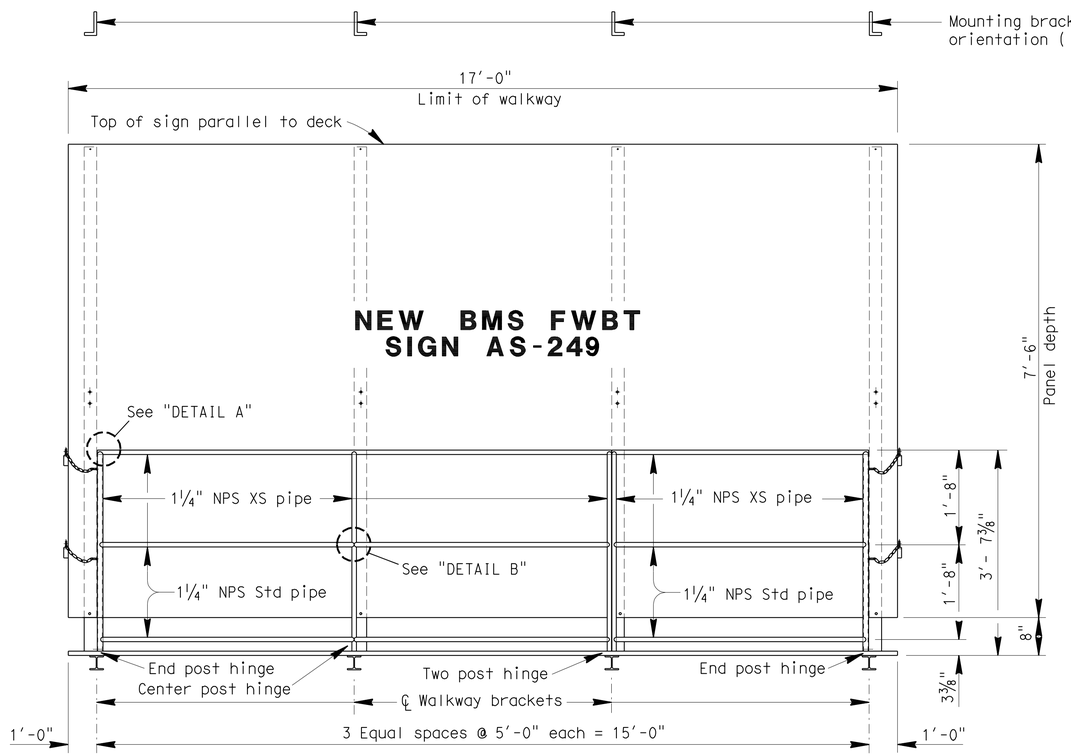

FRONT VIEW

NOTES:

1. Special care shall be taken to insure that the complete hinge and latch assembly will hold the safety railing in a steady manner, free of wobble while in the raised position. Max allowable displacement from vertical at top of railing when latched shall be 1".
2. Safety chain shall be ¼" galvanized steel coil chain, approximately 12 links per foot. Length shall be min which allows lock-up of safety railing. Min of two safety chains per safety railing. Grade 43 high test chain ASTM A413.
3. For details not shown, see "BRIDGE MOUNTED SIGN TYPICAL DETAILS NO.1", "BRIDGE MOUNTED SIGN TYPICAL DETAILS NO.2", "BRIDGE MOUNTED SIGN TYPICAL DETAILS NO.3", and "BRIDGE MOUNTED SIGN TYPICAL DETAILS NO.4".
4. All high strength (HS) bolts shall be snug tightened.
5. Structure shall be galvanized after fabrication. ¾" Diameter holes in underside of tubing may be added by Contractor to permit draining of galvanizing. Drain hole shall not interfere with welds.
6. Safety chain is located at the ends of the walkway only, but is shown here for clarity.

NOTE:
THE CONTRACTOR SHALL VERIFY ALL CONTROLLING FIELD DIMENSIONS BEFORE ORDERING OR FABRICATING ANY MATERIAL.

STANDARD PLAN SHEET NO.
DETAIL NO.

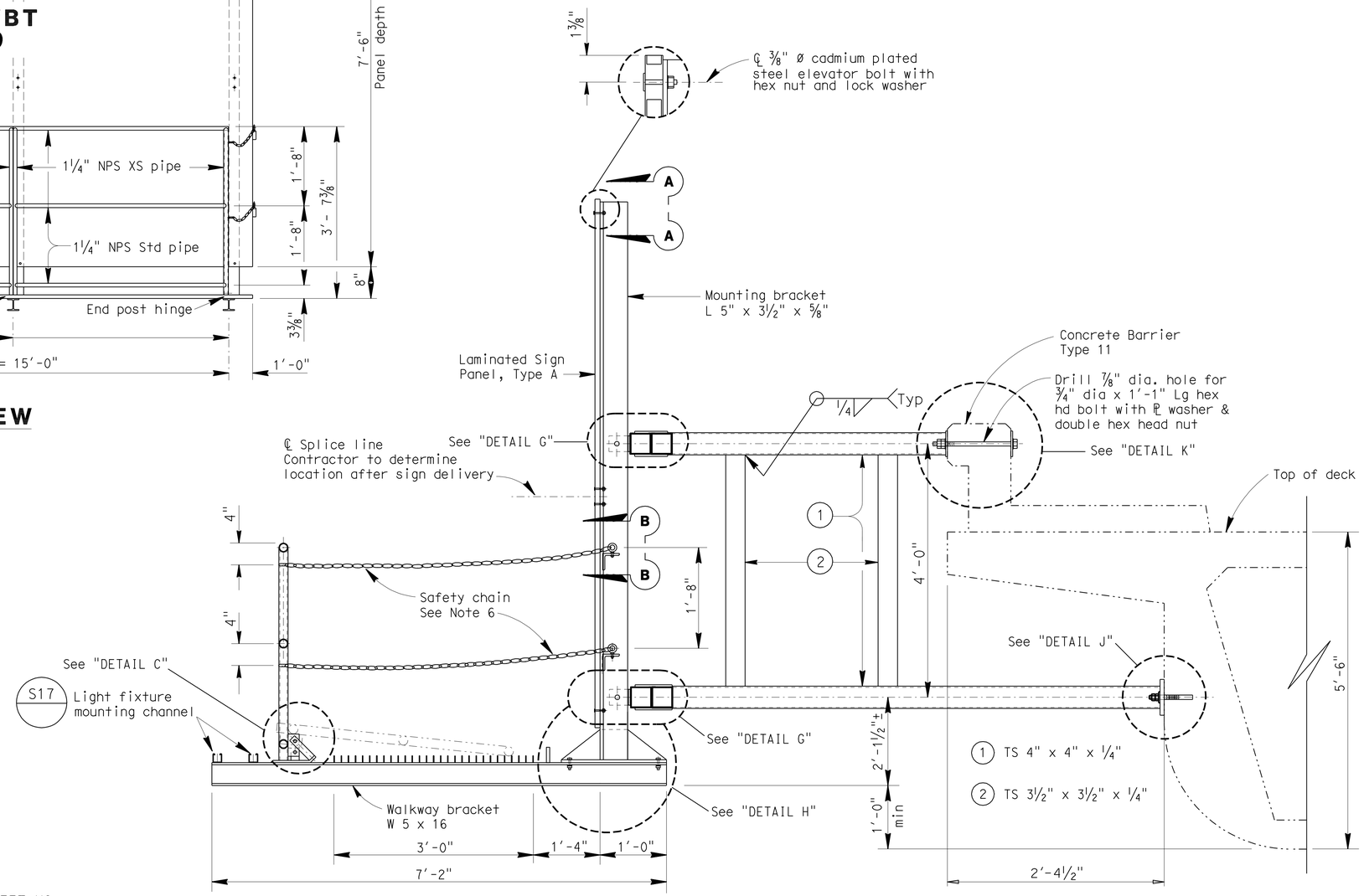

SECTION H-H

No Scale

BRANCH CHIEF Jeffrey B Woody	DESIGN	BY A GUTIERREZ	CHECKED S VU
	DETAILS	BY D W JUSTICE Jr	CHECKED A GUTIERREZ
	QUANTITIES	BY A GUTIERREZ	CHECKED S VU

STATE OF CALIFORNIA
DEPARTMENT OF TRANSPORTATION

DIVISION OF ENGINEERING SERVICES
DESIGN AND TECHNICAL SERVICES
SPECIAL DESIGNS BRANCH A

BRIDGE NO. 24-0249
POST MILE –

WEST EL CAMINO OVERCROSSING
BRIDGE MOUNTED SIGN (BMS) SKEWED TYPICAL SECTION

SDS-4

(ENGLISH) SPECIAL DESIGNS BRANCH BORDER SHEET (REV. 7-1-09)

ORIGINAL SCALE IN INCHES FOR REDUCED PLANS 0 1 2 3

CU 03
EA 379701

DISREGARD PRINTS BEARING EARLIER REVISION DATES 5-28-10 6-14-10

REVISION DATES

SHEET OF

FILE => spec_des_br_prj/2009sd/03-379701/sds4-westelcamino.dgn

USERNAME => trmikesl DATE PLOTTED => 03-FEB-2011 TIME PLOTTED => 08:58

DIST	COUNTY	ROUTE	POST MILES TOTAL PROJECT	SHEET No	TOTAL SHEETS
03	Yol,Sac	80	R10.9/R11.7, M0.0/M10.4	517	1012

REGISTERED CIVIL ENGINEER 6/10/10 DATE

9-7-10
PLANS APPROVAL DATE

REGISTERED PROFESSIONAL ENGINEER ANDREW BUI No. C63560 Exp. 9/30/10 CIVIL STATE OF CALIFORNIA

The State of California or its officers or agents shall not be responsible for the accuracy or completeness of electronic copies of this plan sheet.

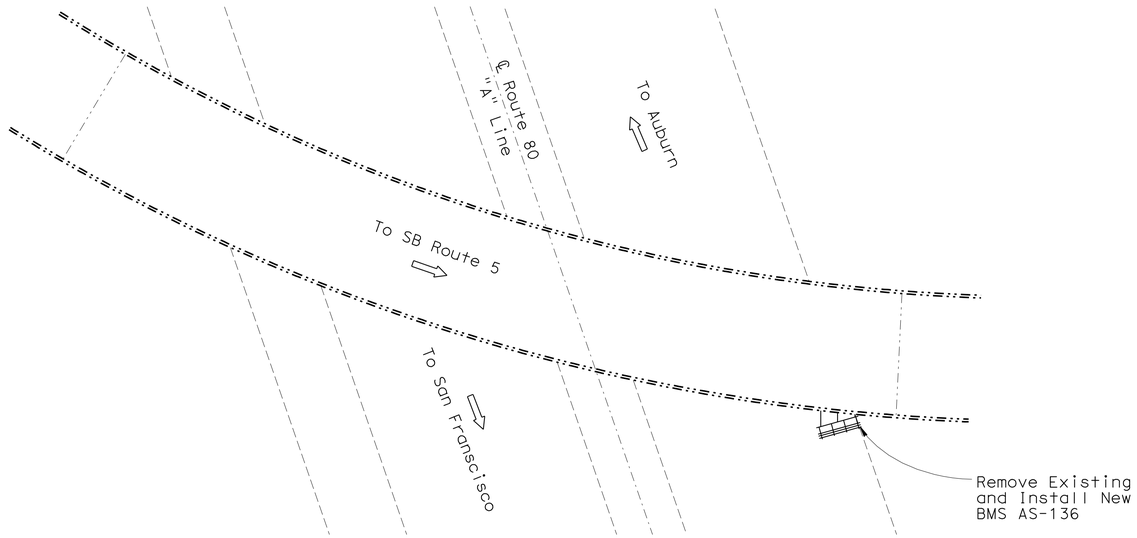

LOCATION PLAN

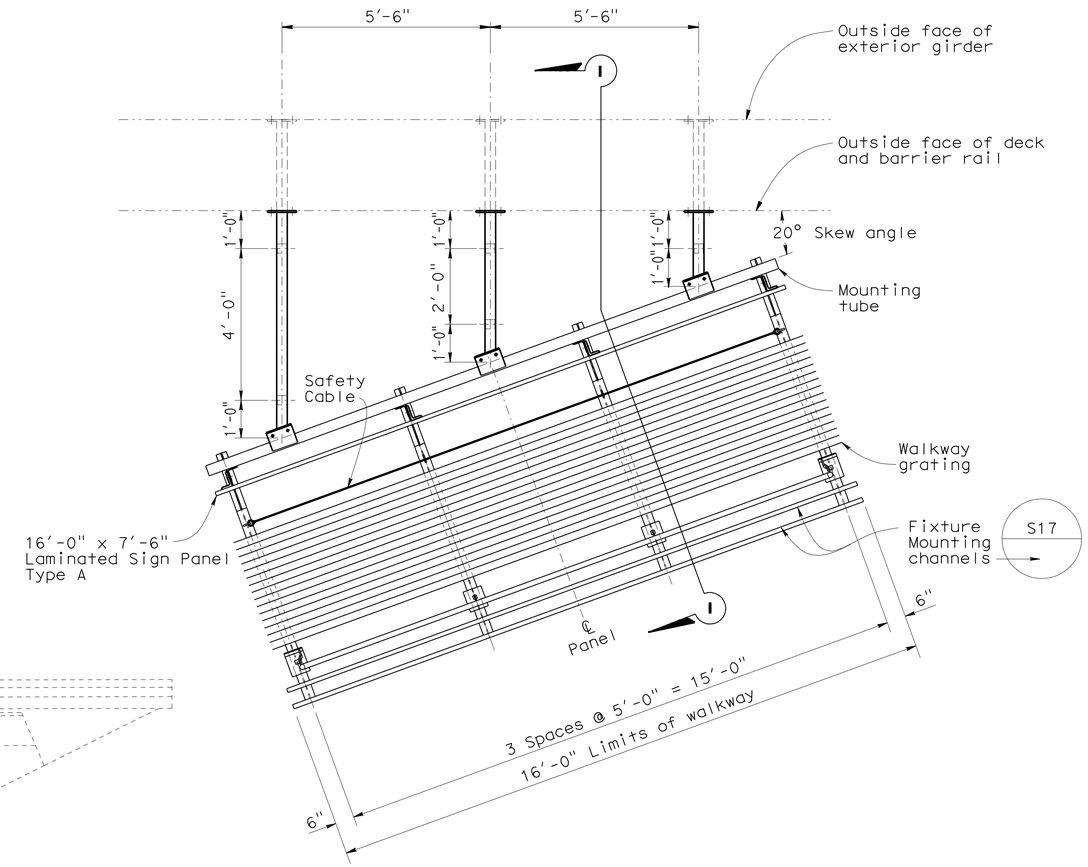

LAYOUT FEBT SIGN AS-136

LEGEND

Existing structure.

New structure.

STANDARD PLANS DATED MAY 2006

A10A ACRONYMS AND ABBREVIATIONS (A-L)
A10B ACRONYMS AND ABBREVIATIONS (M-Z)

Notes:

1. For details not shown, see "STANDARD PLANS MAY 2006".
2. Unless otherwise shown, all steel shall be galvanized after fabrication.
3. Min size fillet weld is ¼" or thickness of thinner part unless noted otherwise.
4. Contractor to provide anchor bolt layout before anchor bolts are placed.
5. For sign location, see "PAVEMENT DELINEATION AND SIGN PLANS".

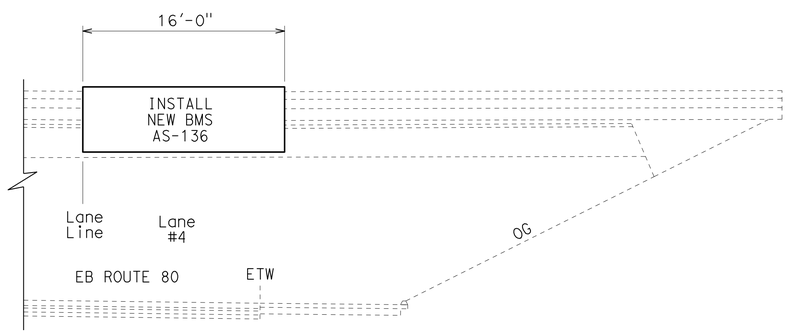

EB ELEVATION

WEST CONNECTOR OC
24-0206F

NOTE:
THE CONTRACTOR SHALL VERIFY ALL CONTROLLING FIELD DIMENSIONS BEFORE ORDERING OR FABRICATING ANY MATERIAL.

STANDARD PLAN SHEET NO.

DETAIL NO.

No Scale

BRANCH CHIEF Jeffrey B Woody

	BY	CHECKED
DESIGN	A GUTIERREZ	S VU
DETAILS	D W JUSTICE Jr	A GUTIERREZ
QUANTITIES	A GUTIERREZ	S VU

STATE OF CALIFORNIA
DEPARTMENT OF TRANSPORTATION

DIVISION OF ENGINEERING SERVICES
DESIGN AND TECHNICAL SERVICES
SPECIAL DESIGNS BRANCH A

BRIDGE NO. 24-0206F
POST MILE –

WEST CONNECTOR OVERCROSSING
BRIDGE MOUNTED SIGN (BMS) SKEWED LOCATION PLAN AND LAYOUT

SDS-5

(ENGLISH) SPECIAL DESIGNS BRANCH BORDER SHEET (REV. 7-1-09)

ORIGINAL SCALE IN INCHES FOR REDUCED PLANS 0 1 2 3

CU 03
EA 379701

DISREGARD PRINTS BEARING EARLIER REVISION DATES 5-28-10 6-14-10

REVISION DATES | SHEET | OF

FILE => spec_des_br_prj/2009sd/03-379701/sds5-westconn.dgn

USERNAME => trmikest DATE PLOTTED => 03-FEB-2011 TIME PLOTTED => 08:58

DIST	COUNTY	ROUTE	POST MILES TOTAL PROJECT	SHEET No	TOTAL SHEETS
03	Yol,Sac	80	R10.9/R11.7, M0.0/M10.4	518	1012

REGISTERED CIVIL ENGINEER 6/10/10 DATE

9-7-10
PLANS APPROVAL DATE

REGISTERED PROFESSIONAL ENGINEER ANDREW BUI No. C63560 Exp. 9/30/10 CIVIL STATE OF CALIFORNIA

The State of California or its officers or agents shall not be responsible for the accuracy or completeness of electronic copies of this plan sheet.

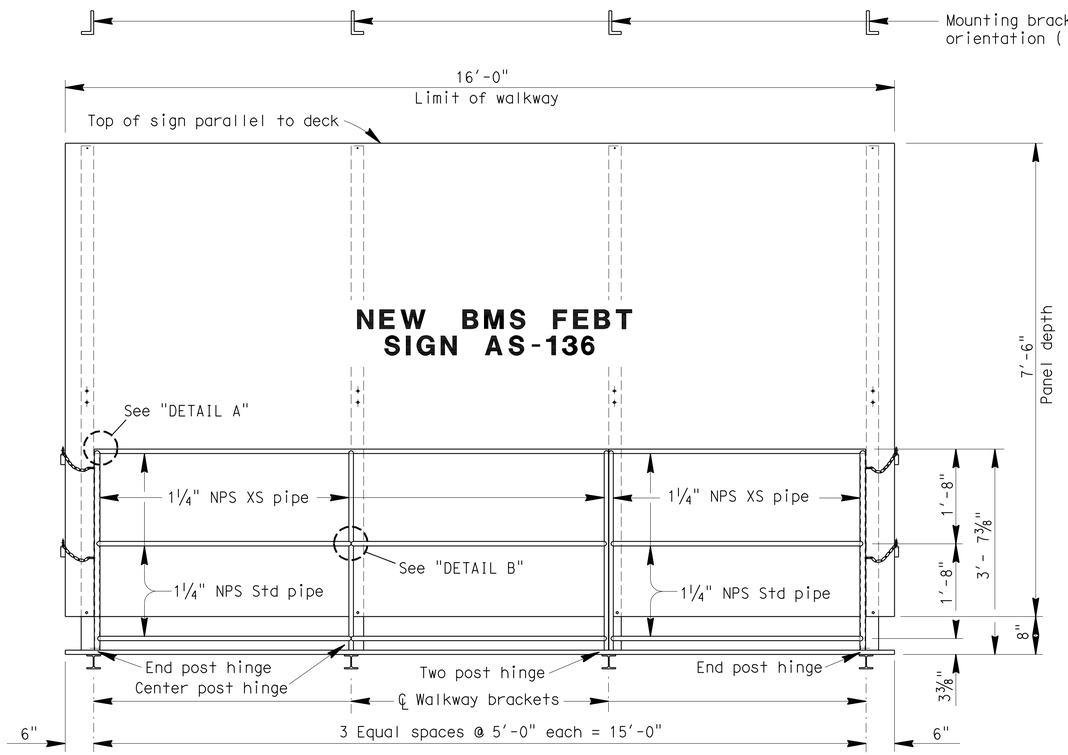

FRONT VIEW

NOTES:

1. Special care shall be taken to insure that the complete hinge and latch assembly will hold the safety railing in a steady manner, free of wobble while in the raised position. Max allowable displacement from vertical at top of railing when latched shall be 1".
2. Safety chain shall be ¼" galvanized steel coil chain, approximately 12 links per foot. Length shall be min which allows lock-up of safety railing. Min of two safety chains per safety railing. Grade 43 high test chain ASTM A413.
3. For details not shown, see "BRIDGE MOUNTED SIGN TYPICAL DETAILS NO.1", "BRIDGE MOUNTED SIGN TYPICAL DETAILS NO.2", "BRIDGE MOUNTED SIGN TYPICAL DETAILS NO.3", and "BRIDGE MOUNTED SIGN TYPICAL DETAILS NO.4".
4. All high strength (HS) bolts shall be snug tightened.
5. Structure shall be galvanized after fabrication. ¾" Diameter holes in underside of tubing may be added by Contractor to permit draining of galvanizing. Drain hole shall not interfere with welds.
6. Safety chain is located at the ends of the walkway only, but is shown here for clarity.

NOTE:
THE CONTRACTOR SHALL VERIFY ALL CONTROLLING FIELD DIMENSIONS BEFORE ORDERING OR FABRICATING ANY MATERIAL.

STANDARD PLAN SHEET NO.
DETAIL NO.

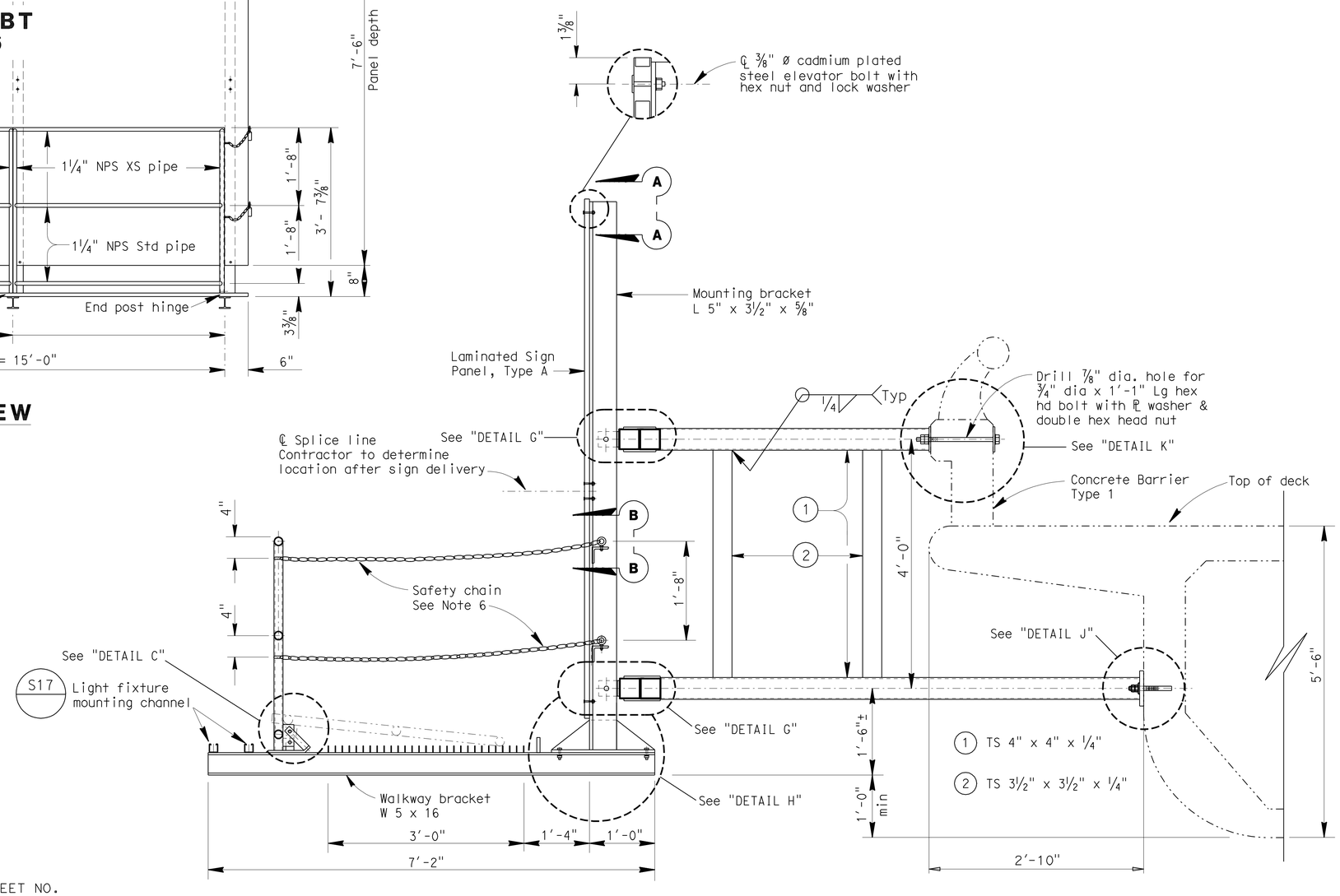

SECTION I-I

No Scale

BRANCH CHIEF	DESIGN	BY A GUTIERREZ	CHECKED S VU
	DETAILS	BY D W JUSTICE Jr	CHECKED A GUTIERREZ
	QUANTITIES	BY A GUTIERREZ	CHECKED S VU

STATE OF CALIFORNIA
DEPARTMENT OF TRANSPORTATION

DIVISION OF ENGINEERING SERVICES
DESIGN AND TECHNICAL SERVICES
SPECIAL DESIGNS BRANCH A

BRIDGE NO. 24-0206F
POST MILE –

WEST CONNECTOR OVERCROSSING
BRIDGE MOUNTED SIGN (BMS) SKEWED TYPICAL SECTION

SDS-6

(ENGLISH) SPECIAL DESIGNS BRANCH BORDER SHEET (REV. 7-1-09)

ORIGINAL SCALE IN INCHES FOR REDUCED PLANS 0 1 2 3

CU 03
EA 379701

DISREGARD PRINTS BEARING EARLIER REVISION DATES 5-28-10 6-14-10

REVISION DATES | SHEET | OF

FILE => spec_des_br_prj/2009sd/03-379701/sds6-westconn.dgn

USERNAME => trmikesi DATE PLOTTED => 03-FEB-2011 TIME PLOTTED => 08:58

DIST	COUNTY	ROUTE	POST MILES TOTAL PROJECT	SHEET No	TOTAL SHEETS
03	Yol,Sac	80	R10.9/R11.7, M0.0/M10.4	519	1012

REGISTERED CIVIL ENGINEER 6/10/10 DATE

9-7-10
PLANS APPROVAL DATE

REGISTERED PROFESSIONAL ENGINEER
ANDREW BUI
No. C63560
Exp. 9/30/10
CIVIL
STATE OF CALIFORNIA

The State of California or its officers or agents shall not be responsible for the accuracy or completeness of electronic copies of this plan sheet.

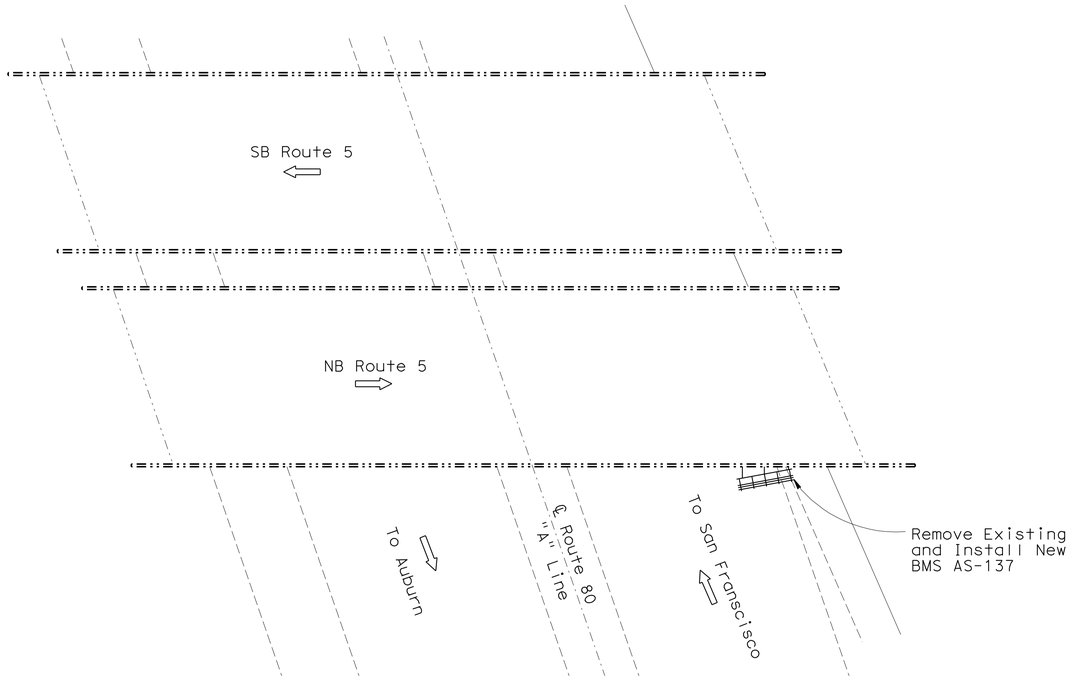

LOCATION PLAN

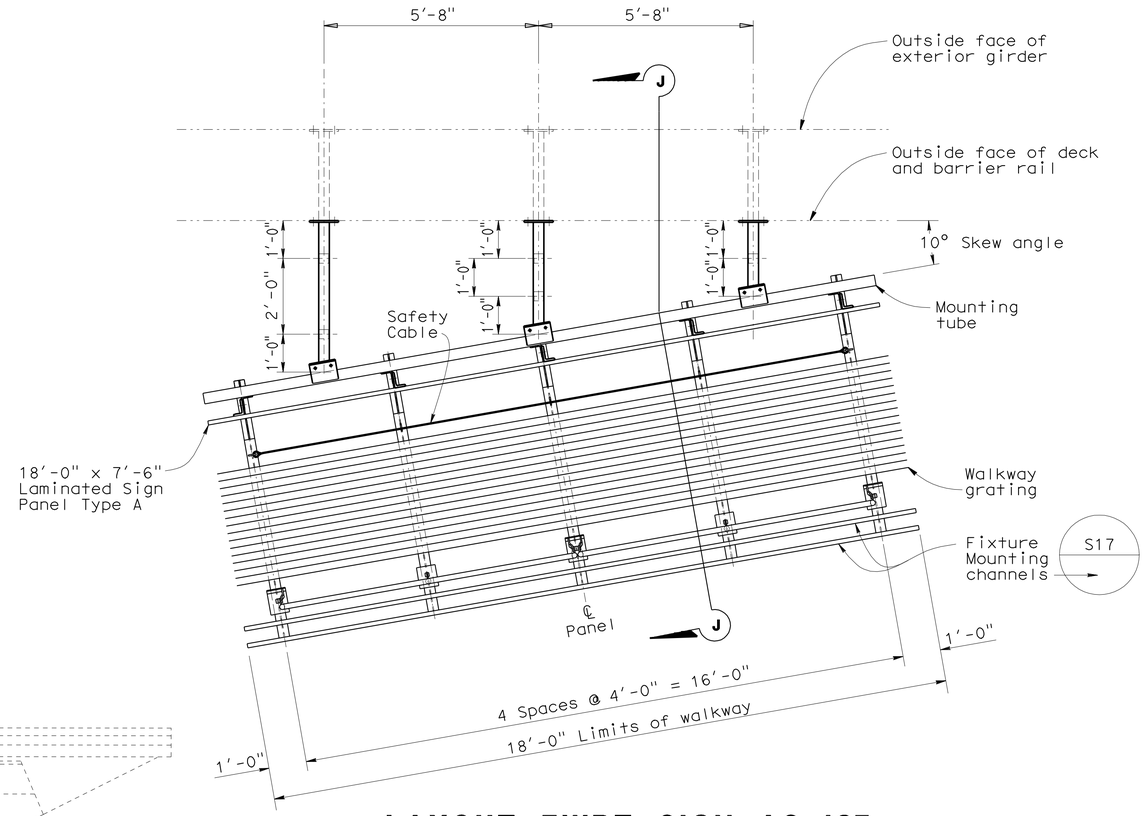

LAYOUT FWBT SIGN AS-137

LEGEND

Existing structure.

New structure.

STANDARD PLANS DATED MAY 2006

A10A ACRONYMS AND ABBREVIATIONS (A-L)
A10B ACRONYMS AND ABBREVIATIONS (M-Z)

Notes:

1. For details not shown, see "STANDARD PLANS MAY 2006".
2. Unless otherwise shown, all steel shall be galvanized after fabrication.
3. Min size fillet weld is 1/4" or thickness of thinner part unless noted otherwise.
4. Contractor to provide anchor bolt layout before anchor bolts are placed.
5. For sign location, see "PAVEMENT DELINEATION AND SIGN PLANS".

WB ELEVATION

ROUTE 5/80 SEPARATION
24-0207R

NOTE:
THE CONTRACTOR SHALL VERIFY ALL CONTROLLING FIELD DIMENSIONS BEFORE ORDERING OR FABRICATING ANY MATERIAL.

STANDARD PLAN SHEET NO.

DETAIL NO.

No Scale

BRANCH CHIEF Jeffrey B Woody

	BY	CHECKED
DESIGN	A GUTIERREZ	S VU
DETAILS	D W JUSTICE Jr	A GUTIERREZ
QUANTITIES	A GUTIERREZ	S VU

STATE OF CALIFORNIA
DEPARTMENT OF TRANSPORTATION

DIVISION OF ENGINEERING SERVICES
DESIGN AND TECHNICAL SERVICES
SPECIAL DESIGNS BRANCH A

BRIDGE NO. 24-0207R
POST MILE –

ROUTE 5/80 SEPARATION
BRIDGE MOUNTED SIGN (BMS) SKEWED LOCATION PLAN AND LAYOUT

SDS-7

(ENGLISH) SPECIAL DESIGNS BRANCH BORDER SHEET (REV. 7-1-09)

ORIGINAL SCALE IN INCHES FOR REDUCED PLANS 0 1 2 3

CU 03
EA 379701

DISREGARD PRINTS BEARING EARLIER REVISION DATES 5-28-10 6-14-10

REVISION DATES | SHEET | OF

FILE => spec_des_br_prj/2009sd/03-379701/sds7-r5-80.dgn

USERNAME => trmikesl DATE PLOTTED => 03-FEB-2011 TIME PLOTTED => 08:58

DIST	COUNTY	ROUTE	POST MILES TOTAL PROJECT	SHEET No	TOTAL SHEETS
03	Yol,Sac	80	R10.9/R11.7, M0.0/M10.4	520	1012

REGISTERED CIVIL ENGINEER 6/10/10 DATE

9-7-10
PLANS APPROVAL DATE

REGISTERED PROFESSIONAL ENGINEER ANDREW BUI No. C63560 Exp. 9/30/10 CIVIL STATE OF CALIFORNIA

The State of California or its officers or agents shall not be responsible for the accuracy or completeness of electronic copies of this plan sheet.

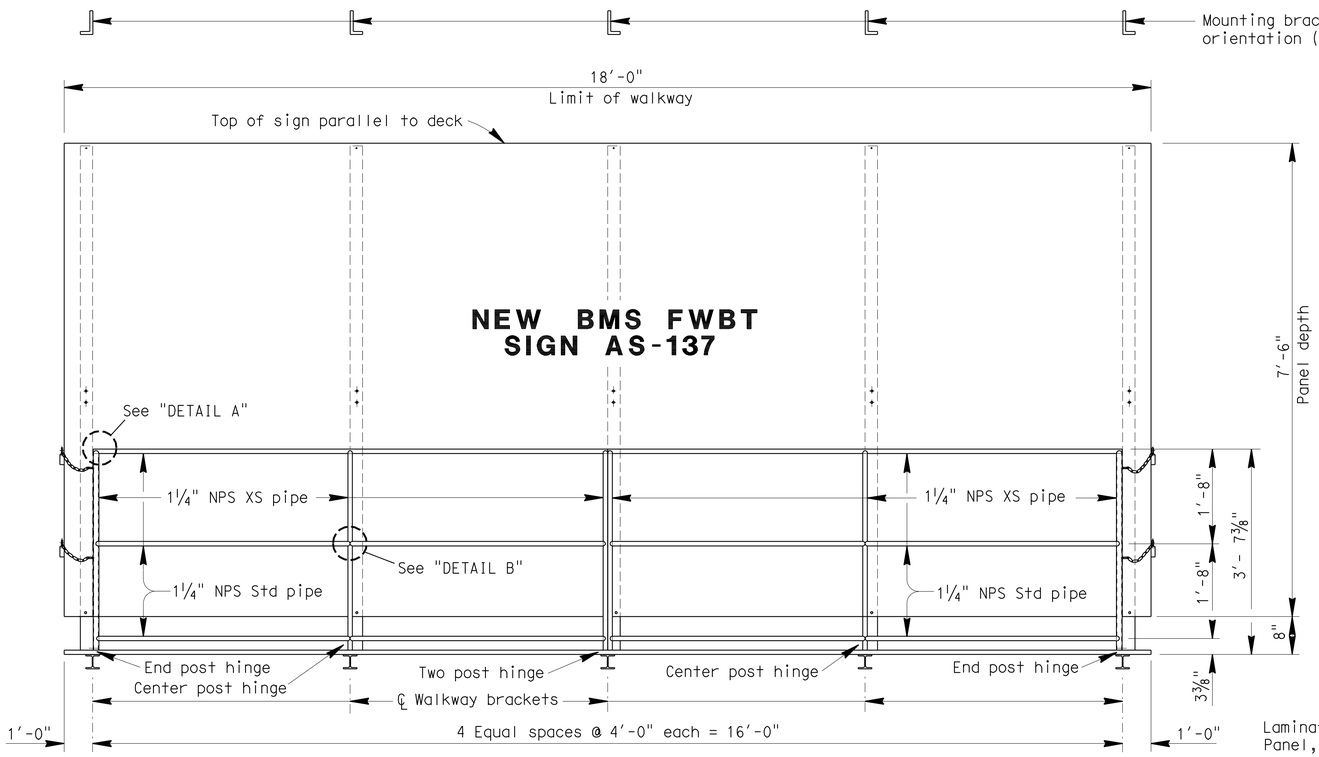

FRONT VIEW

NOTES:

1. Special care shall be taken to insure that the complete hinge and latch assembly will hold the safety railing in a steady manner, free of wobble while in the raised position. Max allowable displacement from vertical at top of railing when latched shall be 1".
2. Safety chain shall be ¼" galvanized steel coil chain, approximately 12 links per foot. Length shall be min which allows lock-up of safety railing. Min of two safety chains per safety railing. Grade 43 high test chain ASTM A413.
3. For details not shown, see "BRIDGE MOUNTED SIGN TYPICAL DETAILS NO.1", "BRIDGE MOUNTED SIGN TYPICAL DETAILS NO.2", "BRIDGE MOUNTED SIGN TYPICAL DETAILS NO.3", and "BRIDGE MOUNTED SIGN TYPICAL DETAILS NO.4".
4. All high strength (HS) bolts shall be snug tightened.
5. Structure shall be galvanized after fabrication. ¾" Diameter holes in underside of tubing may be added by Contractor to permit draining of galvanizing. Drain hole shall not interfere with welds.
6. Safety chain is located at the ends of the walkway only, but is shown here for clarity.

NOTE:
THE CONTRACTOR SHALL VERIFY ALL CONTROLLING FIELD DIMENSIONS BEFORE ORDERING OR FABRICATING ANY MATERIAL.

STANDARD PLAN SHEET NO.
DETAIL NO.

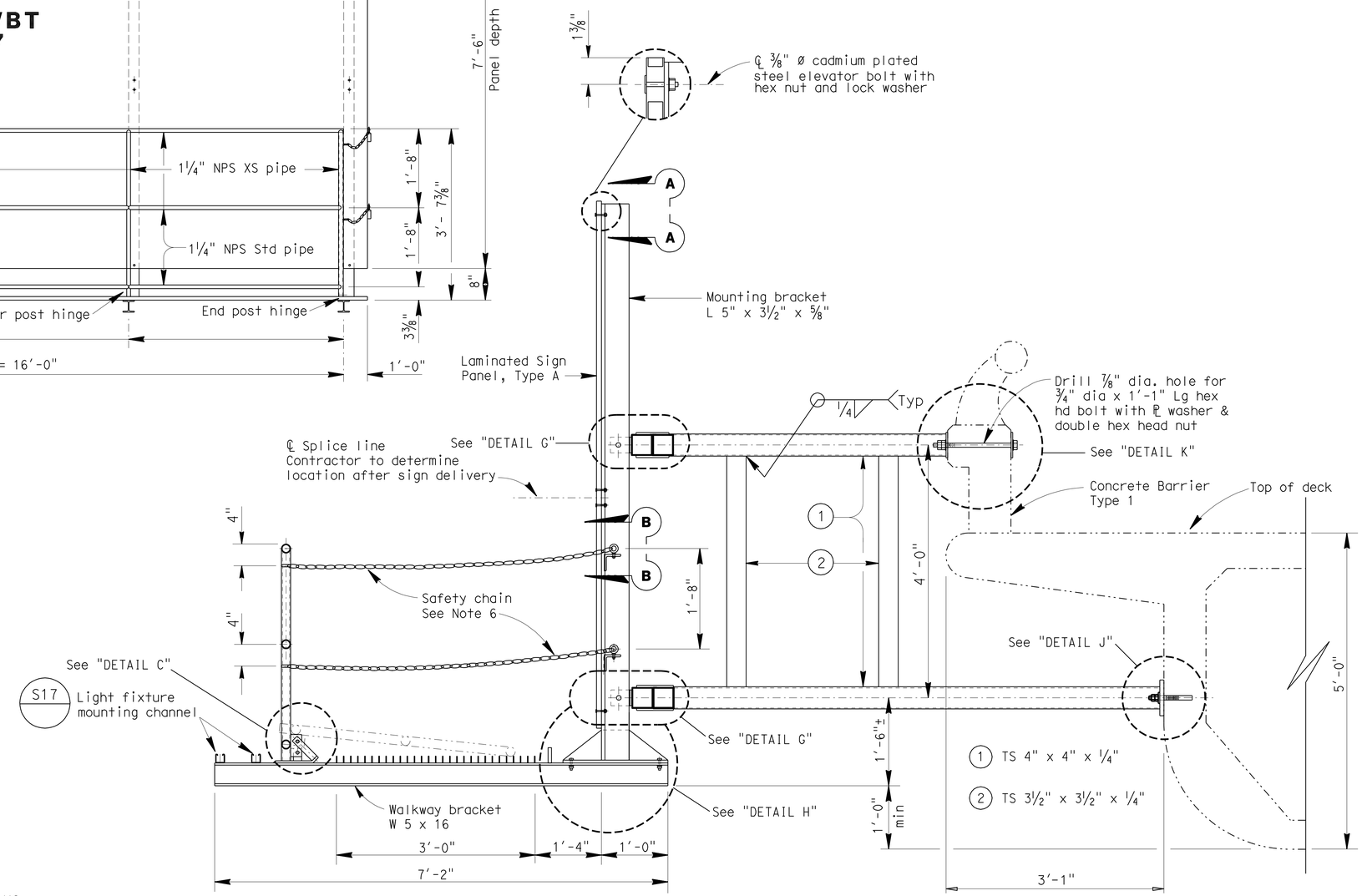

SECTION J-J

No Scale

BRANCH CHIEF Jeffrey B Woody	DESIGN	BY A GUTIERREZ	CHECKED S VU
	DETAILS	BY D W JUSTICE Jr	CHECKED A GUTIERREZ
	QUANTITIES	BY A GUTIERREZ	CHECKED S VU

STATE OF CALIFORNIA
DEPARTMENT OF TRANSPORTATION

DIVISION OF ENGINEERING SERVICES
DESIGN AND TECHNICAL SERVICES
SPECIAL DESIGNS BRANCH A

BRIDGE NO. 24-0207R
POST MILE –

ROUTE 5/80 SEPARATION
BRIDGE MOUNTED SIGN (BMS) SKEWED TYPICAL SECTION

SDS-8

(ENGLISH) SPECIAL DESIGNS BRANCH BORDER SHEET (REV. 7-1-09)

ORIGINAL SCALE IN INCHES FOR REDUCED PLANS 0 1 2 3

CU 03
EA 379701

DISREGARD PRINTS BEARING EARLIER REVISION DATES 5-28-10 6-14-10

REVISION DATES | SHEET | OF

FILE => spec_des_br_prj/2009sd/03-379701/sds8-r5-80.dgn

USERNAME => rrmikest DATE PLOTTED => 03-FEB-2011 TIME PLOTTED => 08:58

DIST	COUNTY	ROUTE	POST MILES TOTAL PROJECT	SHEET No	TOTAL SHEETS
03	Yol,Sac	80	R10.9/R11.7, M0.0/M10.4	521	1012

REGISTERED CIVIL ENGINEER 6/10/10 DATE

9-7-10
PLANS APPROVAL DATE

REGISTERED PROFESSIONAL ENGINEER
ANDREW BUI
No. C63560
Exp. 9/30/10
CIVIL
STATE OF CALIFORNIA

The State of California or its officers or agents shall not be responsible for the accuracy or completeness of electronic copies of this plan sheet.

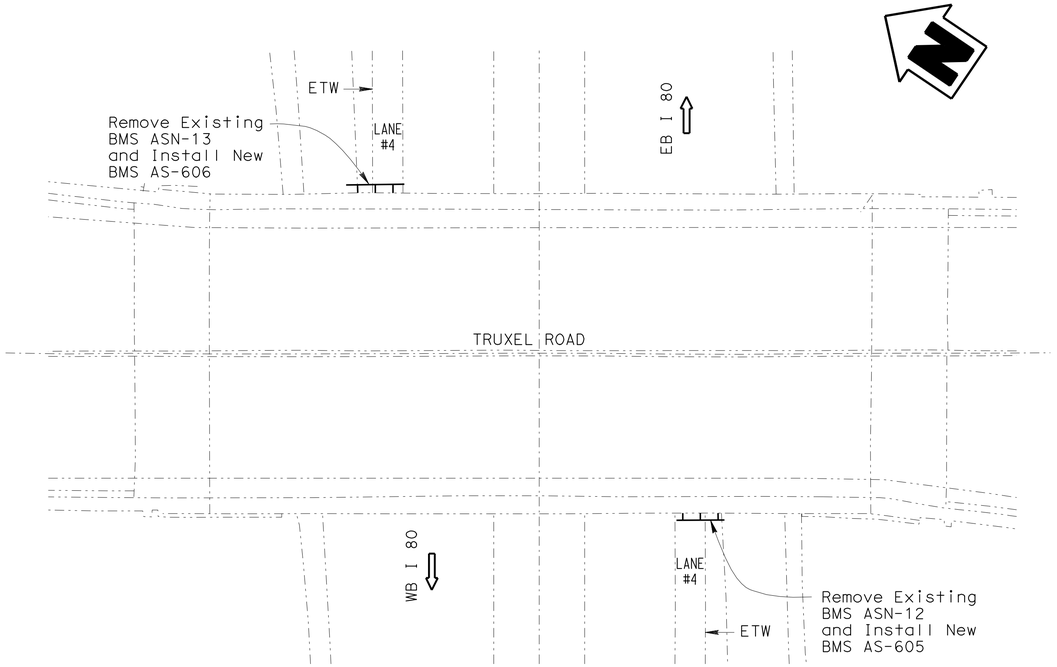

LOCATION PLAN

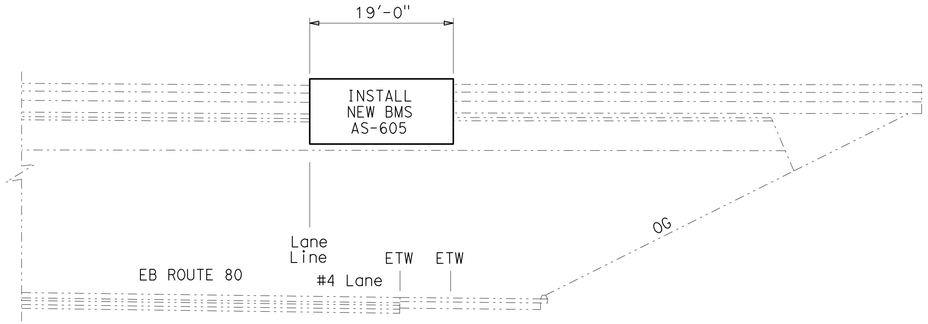

EB ELEVATION

TRUXEL ROAD OC
24-0362

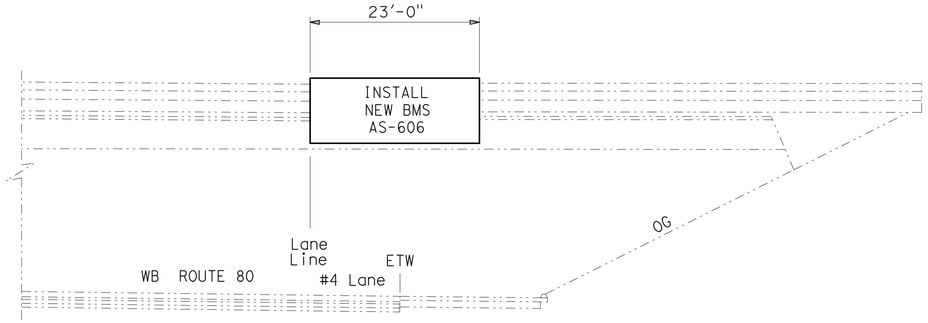

WB ELEVATION

TRUXEL ROAD OC
24-0362

LEGEND

Existing structure.

New structure.

STANDARD PLANS DATED MAY 2006

A10A ACRONYMS AND ABBREVIATIONS (A-L)
A10B ACRONYMS AND ABBREVIATIONS (M-Z)

Notes:

1. For details not shown, see "STANDARD PLANS MAY 2006".
2. Unless otherwise shown, all steel shall be galvanized after fabrication.
3. Min size fillet weld is 1/4" or thickness of thinner part unless noted otherwise.
4. Contractor to provide anchor bolt layout before anchor bolts are placed.
5. For sign location, see "PAVEMENT DELINEATION AND SIGN PLANS".

NOTE:
THE CONTRACTOR SHALL VERIFY ALL CONTROLLING FIELD DIMENSIONS BEFORE ORDERING OR FABRICATING ANY MATERIAL.

STANDARD PLAN SHEET NO.
DETAIL NO.

No Scale

BRANCH CHIEF Jeffrey B Woody

	BY	CHECKED
DESIGN	A GUTIERREZ	S VU
DETAILS	A R DUDSAK	A GUTIERREZ
QUANTITIES	A GUTIERREZ	S VU

STATE OF CALIFORNIA
DEPARTMENT OF TRANSPORTATION

DIVISION OF ENGINEERING SERVICES
DESIGN AND TECHNICAL SERVICES
SPECIAL DESIGNS BRANCH A

BRIDGE NO. 24-0362
POST MILE –

TRUXEL ROAD OVERCROSSING
BRIDGE MOUNTED SIGN (BMS) LOCATION PLAN

SDS-9

(ENGLISH) SPECIAL DESIGNS BRANCH BORDER SHEET (REV. 7-1-09)

ORIGINAL SCALE IN INCHES FOR REDUCED PLANS 0 1 2 3

CU 03
EA 379701

DISREGARD PRINTS BEARING EARLIER REVISION DATES 5-25-10 6-14-10

REVISION DATES | SHEET | OF

FILE => spec_des_br_prj/2009sd/03-379701/sds9-truxel.dgn

USERNAME => trmikesl DATE PLOTTED => 03-FEB-2011 TIME PLOTTED => 08:59

DIST	COUNTY	ROUTE	POST MILES TOTAL PROJECT	SHEET No	TOTAL SHEETS
03	Yol,Sac	80	R10.9/R11.7, M0.0/M10.4	522	1012

REGISTERED CIVIL ENGINEER 6/10/10 DATE

9-7-10
PLANS APPROVAL DATE

REGISTERED PROFESSIONAL ENGINEER ANDREW BUI No. C63560 Exp. 9/30/10 CIVIL STATE OF CALIFORNIA

The State of California or its officers or agents shall not be responsible for the accuracy or completeness of electronic copies of this plan sheet.

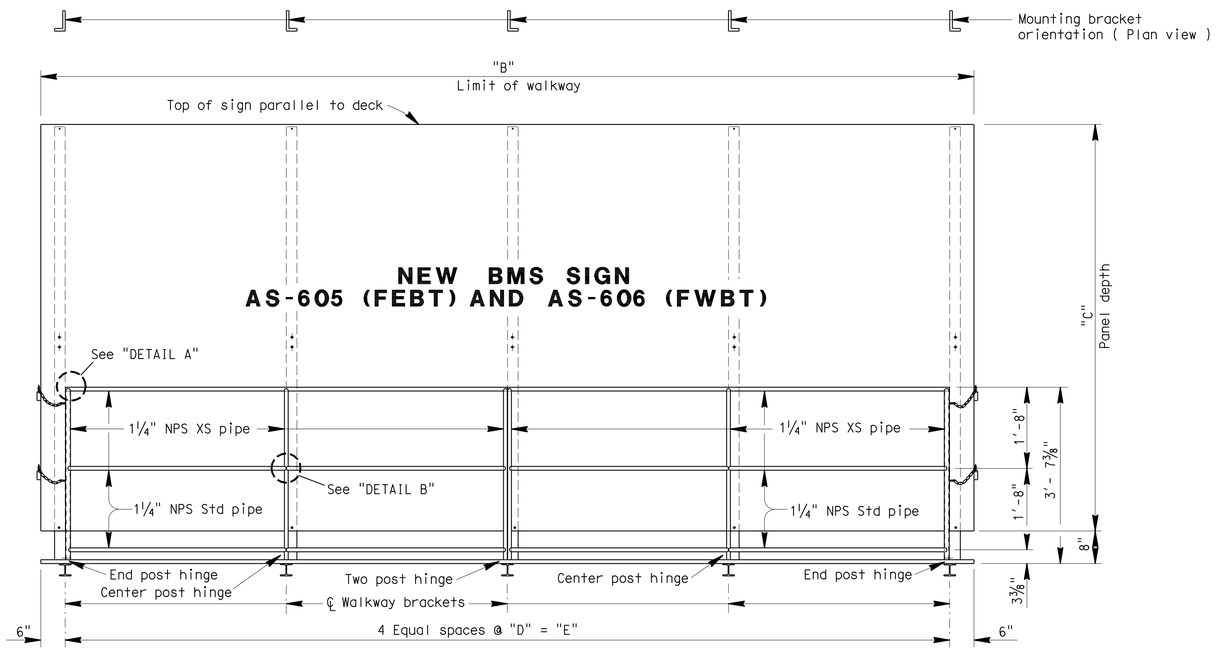

FRONT VIEW

TABLE				
SIGN	"B"	"C"	"D"	"E"
AS-605	19'-0"	7'-6"	4'-6"	18'-0"
AS-606	23'-0"	8'-4"	5'-6"	22'-0"

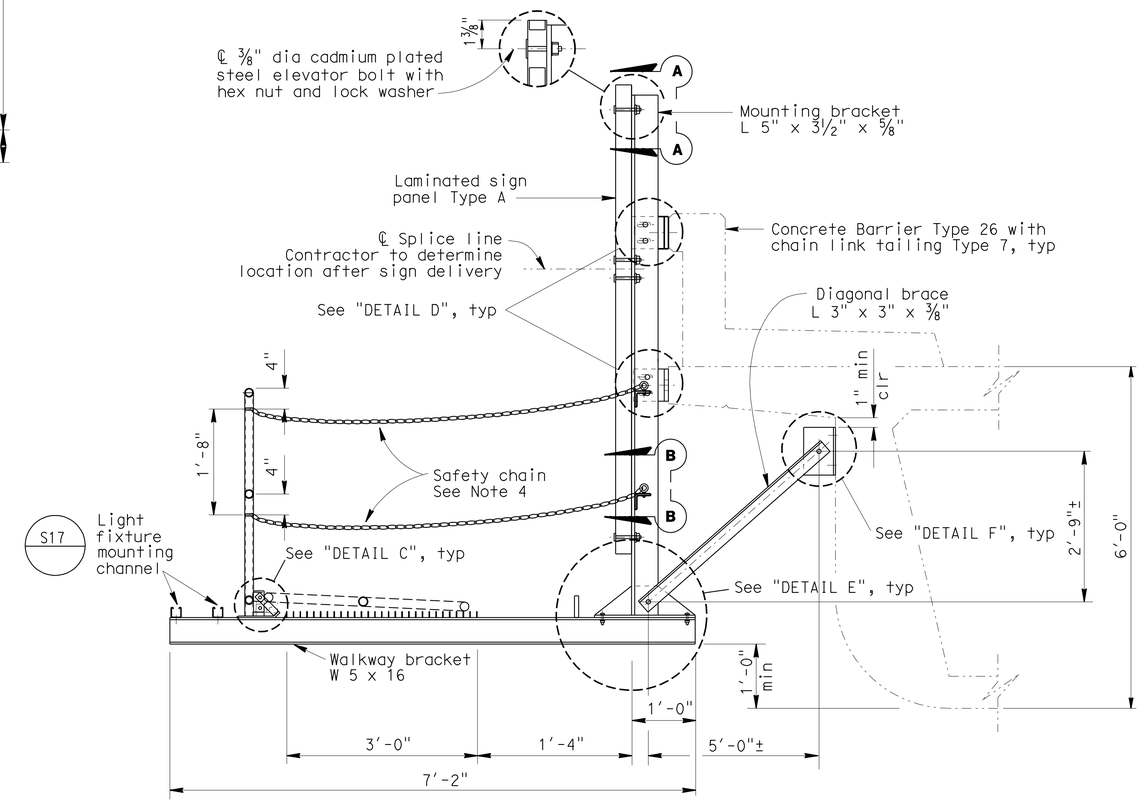

TYPICAL SECTION

No Scale

NOTES:

1. For details not shown, see "BRIDGE MOUNTED SIGN TYPICAL DETAILS NO.1", "BRIDGE MOUNTED SIGN TYPICAL DETAILS NO.2" and "BRIDGE MOUNTED SIGN TYPICAL DETAILS NO.4".
2. Special care shall be taken to insure that the complete hinge and latch assembly will hold the safety railing in a steady manner, free of wobble while in the raised position. Max allowable displacement from vertical at top of railing when latched shall be 1".
3. Safety chain shall be ¼" galvanized steel coil chain, approximately 12 links per foot. Length shall be min which allows lock-up of safety railing. Min of two safety chains at each end of safety railing. Material shall be Grade 43 high test chain ASTM A413.
4. Safety chain is located at the ends of the walkway only but is shown here for clarity.
5. All high strength (HS) bolts shall be snug tightened.

NOTE:
THE CONTRACTOR SHALL VERIFY ALL CONTROLLING FIELD DIMENSIONS BEFORE ORDERING OR FABRICATING ANY MATERIAL.

STANDARD PLAN SHEET NO.
DETAIL NO.

BRANCH CHIEF Jeffrey B. Woody

	BY	CHECKED
DESIGN	A GUTIERREZ	S VU
DETAILS	A R DUDSAK	A GUTIERREZ
QUANTITIES	A GUTIERREZ	S VU

STATE OF CALIFORNIA
DEPARTMENT OF TRANSPORTATION

DIVISION OF ENGINEERING SERVICES
DESIGN AND TECHNICAL SERVICES
SPECIAL DESIGNS BRANCH A

BRIDGE NO. 24-0362
POST MILE –

TRUXEL ROAD OVERCROSSING
BRIDGE MOUNTED SIGN (BMS) LAYOUT

SDS-10

(ENGLISH) SPECIAL DESIGNS BRANCH BORDER SHEET (REV. 7-1-09)

ORIGINAL SCALE IN INCHES FOR REDUCED PLANS 0 1 2 3

CU 03
EA 379701

DISREGARD PRINTS BEARING EARLIER REVISION DATES

REVISION DATES: 5-28-10 6-14-10

SHEET OF

FILE => spec_des_br_prj/2009sd/03-379701/sds10-truxel.dgn

USERNAME => trmikesl DATE PLOTTED => 03-FEB-2011 TIME PLOTTED => 08:59

DIST	COUNTY	ROUTE	POST MILES TOTAL PROJECT	SHEET No	TOTAL SHEETS
03	Yol,Sac	80	R10.9/R11.7, M0.0/M10.4	523	1012

REGISTERED CIVIL ENGINEER 6/10/10 DATE

9-7-10
PLANS APPROVAL DATE

REGISTERED PROFESSIONAL ENGINEER ANDREW BUI No. C63560 Exp. 9/30/10 CIVIL STATE OF CALIFORNIA

The State of California or its officers or agents shall not be responsible for the accuracy or completeness of electronic copies of this plan sheet.

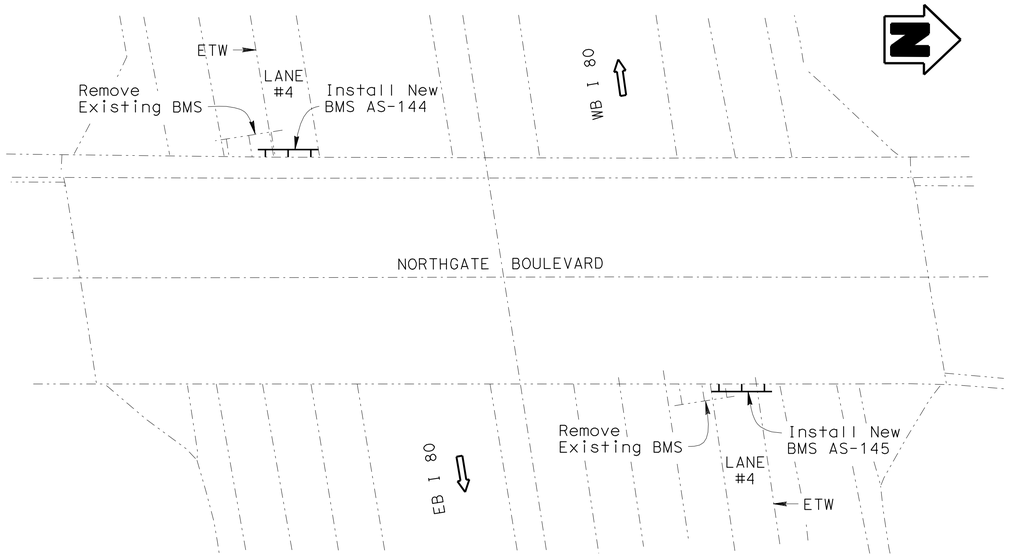

LOCATION PLAN

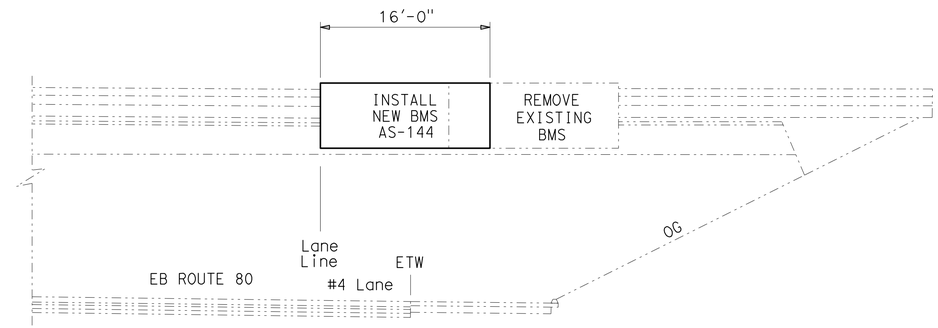

EB ELEVATION

NORTHGATE BLVD OC
24-0217

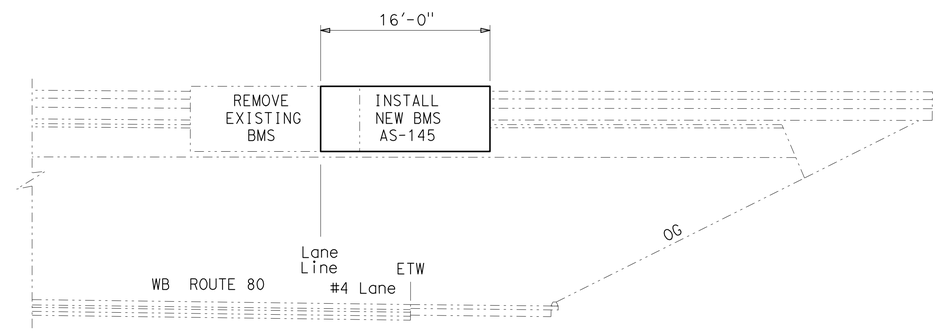

WB ELEVATION

NORTHGATE BLVD OC
24-0217

LEGEND

Existing structure.

New structure.

STANDARD PLANS DATED MAY 2006

A10A ACRONYMS AND ABBREVIATIONS (A-L)
A10B ACRONYMS AND ABBREVIATIONS (M-Z)

Notes:

1. For details not shown, see "STANDARD PLANS MAY 2006".
2. Unless otherwise shown, all steel shall be galvanized after fabrication.
3. Min size fillet weld is 1/4" or thickness of thinner part unless noted otherwise.
4. Contractor to provide anchor bolt layout before anchor bolts are placed.
5. For sign location, see "PAVEMENT DELINEATION AND SIGN PLANS".

NOTE:
THE CONTRACTOR SHALL VERIFY ALL CONTROLLING FIELD DIMENSIONS BEFORE ORDERING OR FABRICATING ANY MATERIAL.

No Scale

BRANCH CHIEF Jeffrey B Woody

	BY	CHECKED
DESIGN	A GUTIERREZ	S VU
DETAILS	A R DUDSAK	A GUTIERREZ
QUANTITIES	A GUTIERREZ	S VU

STATE OF CALIFORNIA
DEPARTMENT OF TRANSPORTATION

DIVISION OF ENGINEERING SERVICES
DESIGN AND TECHNICAL SERVICES
SPECIAL DESIGNS BRANCH A

BRIDGE NO. 24-0217
POST MILE -

NORTHGATE BLVD OVERCROSSING
BRIDGE MOUNTED SIGN (BMS) LOCATION PLAN

SDS-11

(ENGLISH) SPECIAL DESIGNS BRANCH BORDER SHEET (REV. 7-1-09)

ORIGINAL SCALE IN INCHES FOR REDUCED PLANS 0 1 2 3

CU 03
EA 379701

DISREGARD PRINTS BEARING EARLIER REVISION DATES

REVISION DATES: ~~5-28-10~~ 6-14-10

SHEET OF

FILE => spec_des_br_prj/2009sd/03-379701/sds11-northgate.dgn

USERNAME => trmikes1 DATE PLOTTED => 03-FEB-2011 TIME PLOTTED => 08:59

DIST	COUNTY	ROUTE	POST MILES TOTAL PROJECT	SHEET No	TOTAL SHEETS
03	Yol,Sac	80	R10.9/R11.7, M0.0/M10.4	524	1012

REGISTERED CIVIL ENGINEER 6/10/10 DATE

9-7-10
PLANS APPROVAL DATE

REGISTERED PROFESSIONAL ENGINEER ANDREW BUI No. C63560 Exp. 9/30/10 CIVIL STATE OF CALIFORNIA

The State of California or its officers or agents shall not be responsible for the accuracy or completeness of electronic copies of this plan sheet.

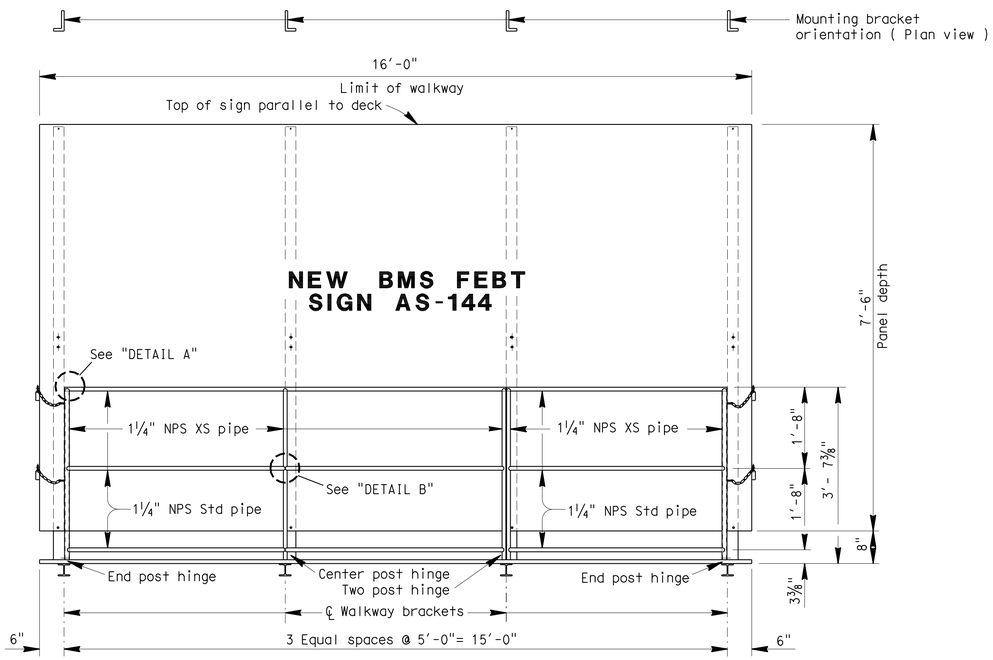

FRONT VIEW

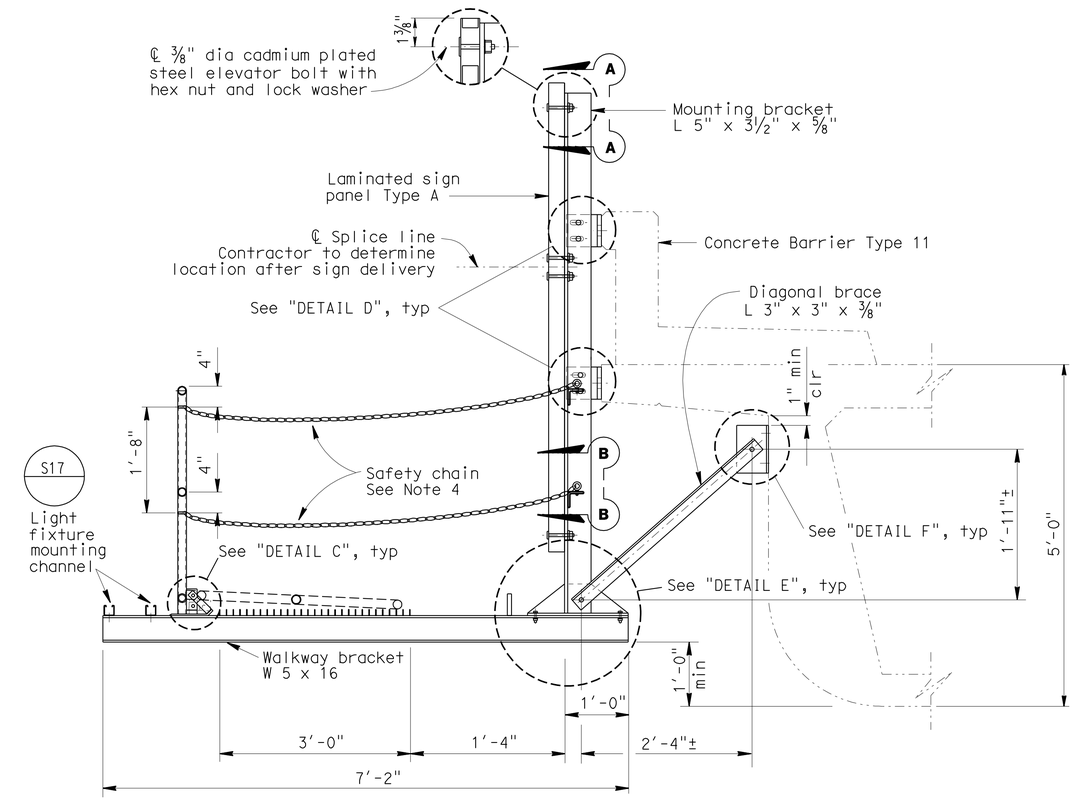

TYPICAL SECTION

No Scale

NOTES:

1. For details not shown, see "BRIDGE MOUNTED SIGN TYPICAL DETAILS NO.1", "BRIDGE MOUNTED SIGN TYPICAL DETAILS NO.2" and "BRIDGE MOUNTED SIGN TYPICAL DETAILS NO. 4".
2. Special care shall be taken to insure that the complete hinge and latch assembly will hold the safety railing in a steady manner, free of wobble while in the raised position. Max allowable displacement from vertical at top of railing when latched shall be 1".
3. Safety chain shall be ¼" galvanized steel coil chain, approximately 12 links per foot. Length shall be min which allows lock-up of safety railing. Min of two safety chains at each end of safety railing. Material shall be Grade 43 high test chain ASTM A413.
4. Safety chain is located at the ends of the walkway only but is shown here for clarity.
5. All high strength (HS) bolts shall be snug tightened.

NOTE:
THE CONTRACTOR SHALL VERIFY ALL CONTROLLING FIELD DIMENSIONS BEFORE ORDERING OR FABRICATING ANY MATERIAL.

STANDARD PLAN SHEET NO.
DETAIL NO.

BRANCH CHIEF Jeffrey B Woody	DESIGN	BY A GUTIERREZ	CHECKED S VU
	DETAILS	BY A R DUDSAK	CHECKED A GUTIERREZ
	QUANTITIES	BY A GUTIERREZ	CHECKED S VU

STATE OF CALIFORNIA
DEPARTMENT OF TRANSPORTATION

DIVISION OF ENGINEERING SERVICES
DESIGN AND TECHNICAL SERVICES
SPECIAL DESIGNS BRANCH A

BRIDGE NO. 24-0217
POST MILE –

NORTHGATE BLVD OVERCROSSING
BRIDGE MOUNTED SIGN (BMS) LAYOUT

SDS-12

(ENGLISH) SPECIAL DESIGNS BRANCH BORDER SHEET (REV. 7-1-09)

ORIGINAL SCALE IN INCHES FOR REDUCED PLANS 0 1 2 3

CU 03
EA 379701

DISREGARD PRINTS BEARING EARLIER REVISION DATES

REVISION DATES: 5-28-10 6-14-10

SHEET OF

FILE => spec_des_br_prj/2009sd/03-379701/sds12-northgate.dgn

USERNAME => trmikesl DATE PLOTTED => 03-FEB-2011 TIME PLOTTED => 08:59

DIST	COUNTY	ROUTE	POST MILES TOTAL PROJECT	SHEET No	TOTAL SHEETS
03	Yol,Sac	80	R10.9/R11.7, M0.0/M10.4	525	1012

REGISTERED CIVIL ENGINEER 6/10/10 DATE

9-7-10
PLANS APPROVAL DATE

REGISTERED PROFESSIONAL ENGINEER ANDREW BUI No. C63560 Exp. 9/30/10 CIVIL STATE OF CALIFORNIA

The State of California or its officers or agents shall not be responsible for the accuracy or completeness of electronic copies of this plan sheet.

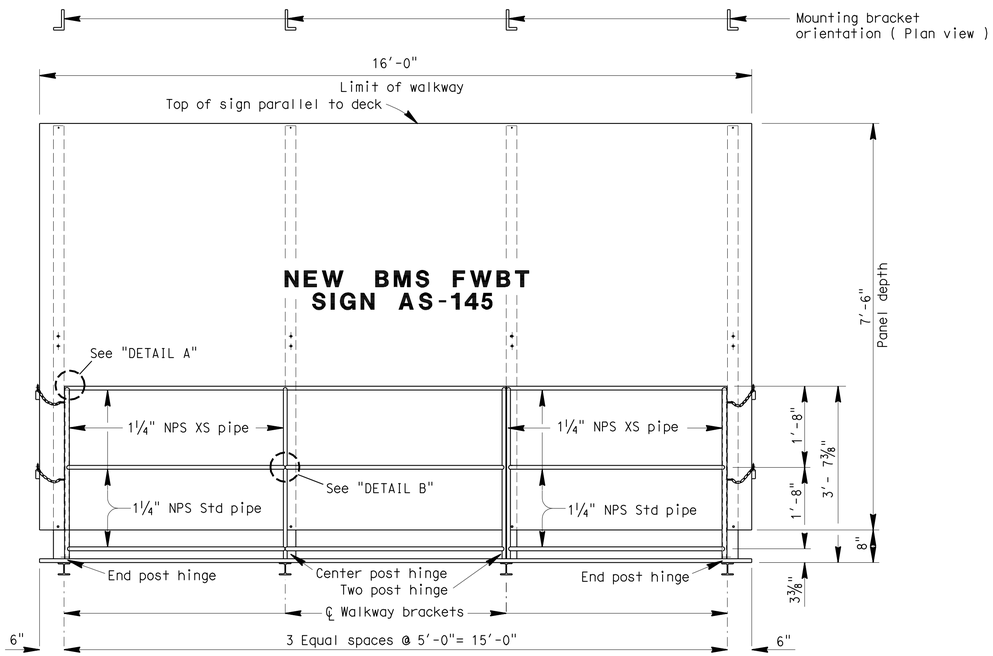

FRONT VIEW

NOTES:

1. For details not shown, see "BRIDGE MOUNTED SIGN TYPICAL DETAILS NO. 1", "BRIDGE MOUNTED SIGN TYPICAL DETAILS NO. 2", and "BRIDGE MOUNTED SIGN TYPICAL DETAILS NO. 4".
2. Special care shall be taken to insure that the complete hinge and latch assembly will hold the safety railing in a steady manner, free of wobble while in the raised position. Max allowable displacement from vertical at top of railing when latched shall be 1".
3. Safety chain shall be ¼" galvanized steel coil chain, approximately 12 links per foot. Length shall be min which allows lock-up of safety railing. Min of two safety chains at each end of safety railing. Material shall be Grade 43 high test chain ASTM A413.
4. Safety chain is located at the ends of the walkway only but is shown here for clarity.
5. All high strength (HS) bolts shall be snug tightened.

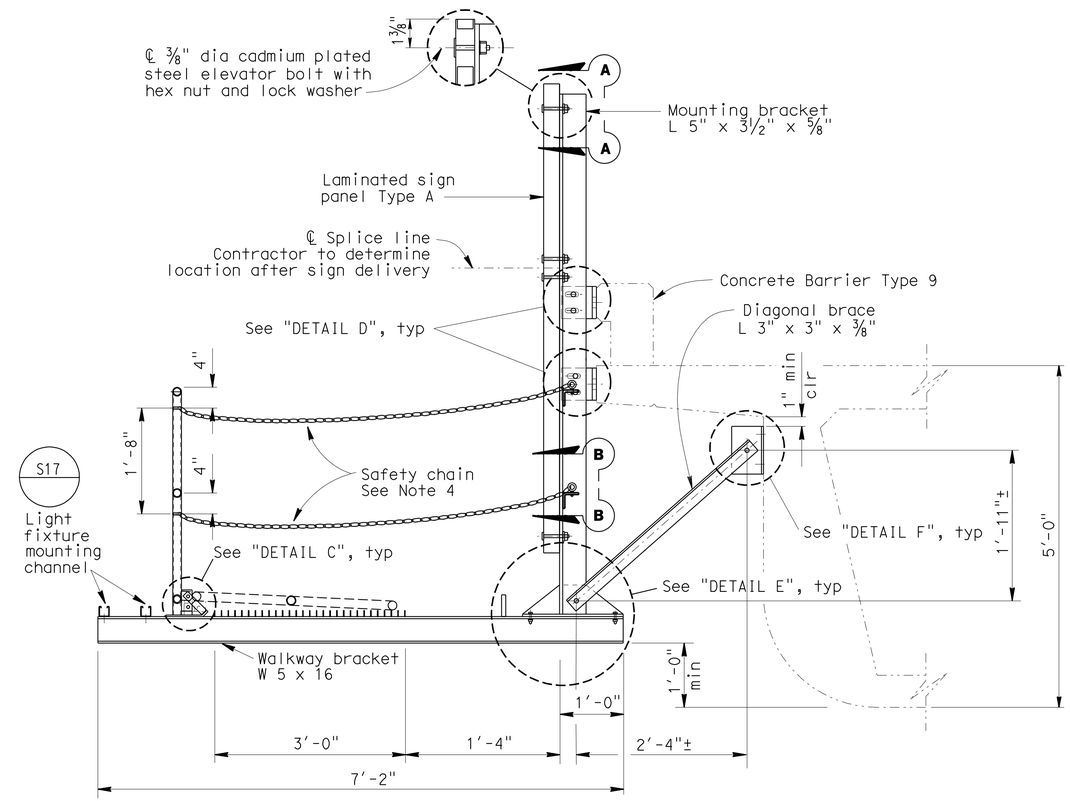

TYPICAL SECTION

No Scale

NOTE:
THE CONTRACTOR SHALL VERIFY ALL CONTROLLING FIELD DIMENSIONS BEFORE ORDERING OR FABRICATING ANY MATERIAL.

STANDARD PLAN SHEET NO.
DETAIL NO.

BRANCH CHIEF Jeffrey B Wrady	DESIGN	BY A GUTIERREZ	CHECKED S VU
	DETAILS	BY A R DUDSAK	CHECKED A GUTIERREZ
	QUANTITIES	BY A GUTIERREZ	CHECKED S VU

STATE OF CALIFORNIA
DEPARTMENT OF TRANSPORTATION

DIVISION OF ENGINEERING SERVICES
DESIGN AND TECHNICAL SERVICES
SPECIAL DESIGNS BRANCH A

BRIDGE NO. 24-0217
POST MILE -

NORTHGATE BLVD OVERCROSSING
BRIDGE MOUNTED SIGN (BMS) LAYOUT

SDS-13

(ENGLISH) SPECIAL DESIGNS BRANCH BORDER SHEET (REV. 7-1-09)

ORIGINAL SCALE IN INCHES FOR REDUCED PLANS 0 1 2 3

CU 03
EA 379701

DISREGARD PRINTS BEARING EARLIER REVISION DATES 5-28-10 6-14-10

REVISION DATES | SHEET | OF

FILE => spec_des_br_prj/2009sd/03-379701/sds13-northgate.dgn

USERNAME => trmikesl DATE PLOTTED => 03-FEB-2011 TIME PLOTTED => 08:59

DIST	COUNTY	ROUTE	POST MILES TOTAL PROJECT	SHEET No	TOTAL SHEETS
03	Yol,Sac	80	R10.9/R11.7, M0.0/M10.4	526	1012

REGISTERED CIVIL ENGINEER 6/10/10 DATE

9-7-10
PLANS APPROVAL DATE

REGISTERED PROFESSIONAL ENGINEER
ANDREW BUI
No. C63560
Exp. 9/30/10
CIVIL
STATE OF CALIFORNIA

The State of California or its officers or agents shall not be responsible for the accuracy or completeness of electronic copies of this plan sheet.

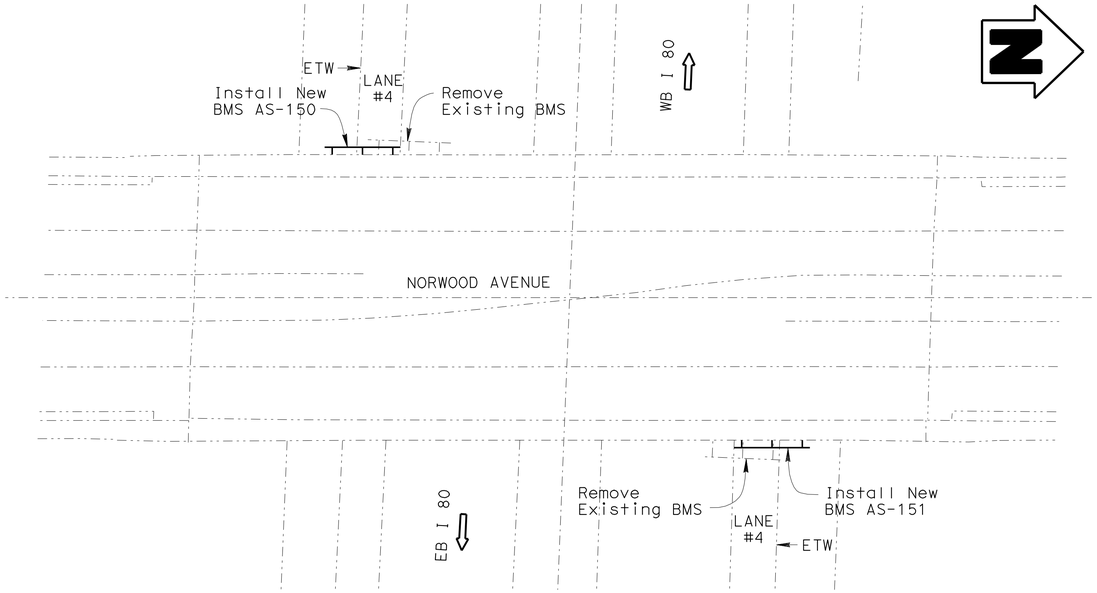

LOCATION PLAN

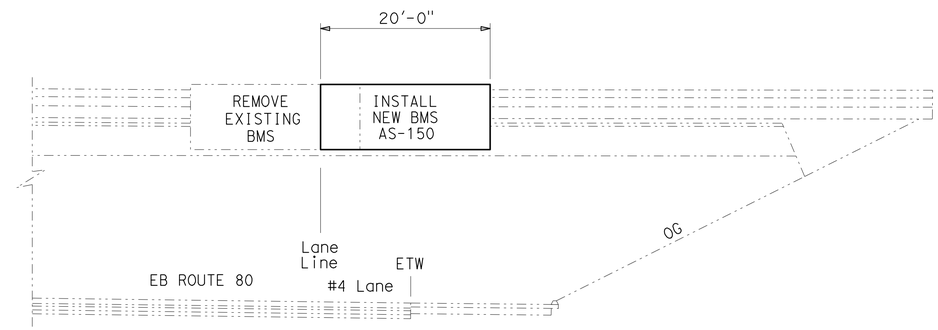

EB ELEVATION

NORWOOD AVE OC
24-0108

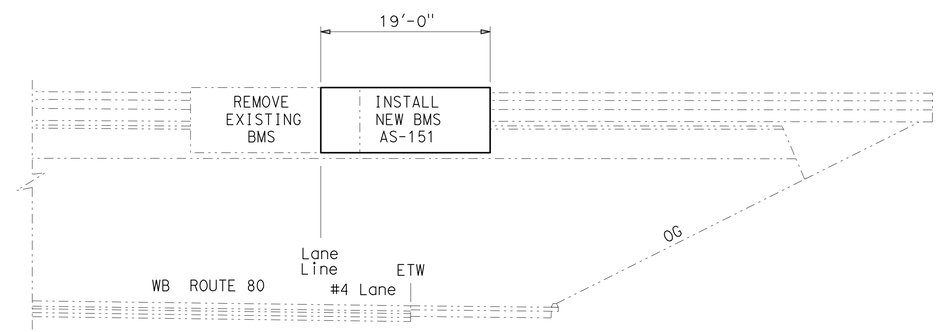

WB ELEVATION

NORWOOD AVE OC
24-0108

LEGEND

Existing structure.

New structure.

STANDARD PLANS DATED MAY 2006

A10A ACRONYMS AND ABBREVIATIONS (A-L)
A10B ACRONYMS AND ABBREVIATIONS (M-Z)

Notes:

1. For details not shown, see "STANDARD PLANS MAY 2006".
2. Unless otherwise shown, all steel shall be galvanized after fabrication.
3. Min size fillet weld is 1/4" or thickness of thinner part unless noted otherwise.
4. Contractor to provide anchor bolt layout before anchor bolts are placed.
5. For sign location, see "PAVEMENT DELINEATION AND SIGN PLANS".

NOTE:
THE CONTRACTOR SHALL VERIFY ALL CONTROLLING FIELD DIMENSIONS BEFORE ORDERING OR FABRICATING ANY MATERIAL.

No Scale

BRANCH CHIEF Jeffrey B. Woody

	BY	CHECKED
DESIGN	A GUTIERREZ	S VU
DETAILS	AR DUDSAK	A GUTIERREZ
QUANTITIES	A GUTIERREZ	S VU

STATE OF CALIFORNIA
DEPARTMENT OF TRANSPORTATION

DIVISION OF ENGINEERING SERVICES
DESIGN AND TECHNICAL SERVICES
SPECIAL DESIGNS BRANCH A

BRIDGE NO. 24-0108
POST MILE -

NORWOOD AVENUE OVERCROSSING

BRIDGE MOUNTED SIGN (BMS) LOCATION PLAN

SDS-14

(ENGLISH) SPECIAL DESIGNS BRANCH BORDER SHEET (REV. 7-1-09)

ORIGINAL SCALE IN INCHES FOR REDUCED PLANS 0 1 2 3

CU 03
EA 379701

DISREGARD PRINTS BEARING EARLIER REVISION DATES 5-28-10 6-14-10

REVISION DATES | SHEET | OF

FILE => spec_des_br_prj/2009sd/03-379701/sds14-norwood.dgn

USERNAME => ttmirkes1 DATE PLOTTED => 03-FEB-2011 TIME PLOTTED => 09:00

DIST	COUNTY	ROUTE	POST MILES TOTAL PROJECT	SHEET No	TOTAL SHEETS
03	Yol,Sac	80	R10.9/R11.7, M0.0/M10.4	527	1012

REGISTERED CIVIL ENGINEER 6/10/10 DATE

9-7-10
PLANS APPROVAL DATE

REGISTERED PROFESSIONAL ENGINEER ANDREW BUI No. C63560 Exp. 9/30/10 CIVIL STATE OF CALIFORNIA

The State of California or its officers or agents shall not be responsible for the accuracy or completeness of electronic copies of this plan sheet.

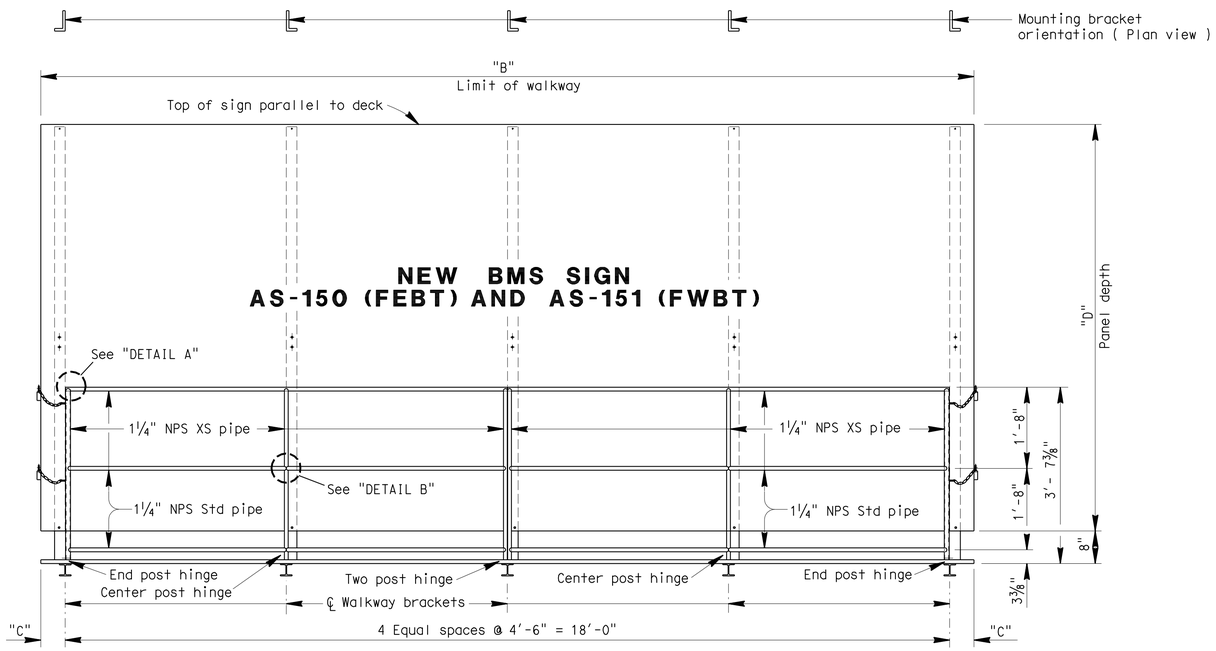

FRONT VIEW

TABLE			
SIGN	"B"	"C"	"D"
AS-150	20'-0"	1'-0"	8'-4"
AS-151	19'-0"	6"	7'-6"

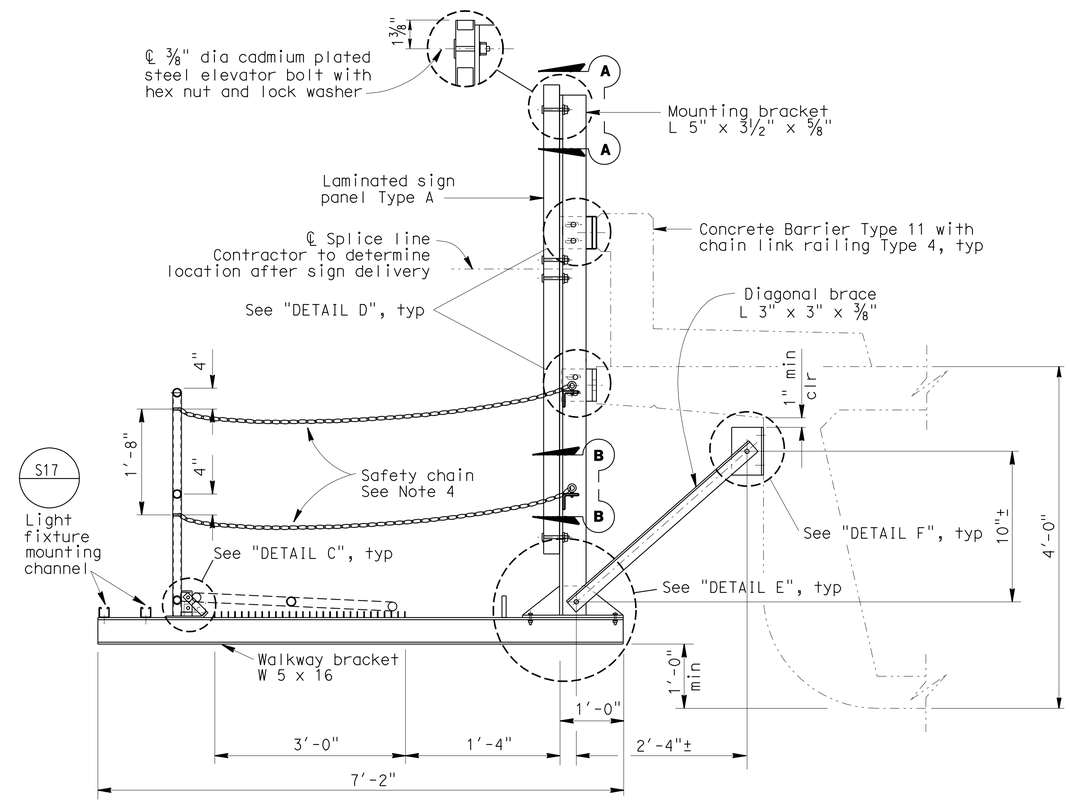

TYPICAL SECTION

No Scale

NOTES:

1. For details not shown, see "BRIDGE MOUNTED SIGN TYPICAL DETAILS NO. 1", "BRIDGE MOUNTED SIGN TYPICAL DETAILS NO. 2", and "BRIDGE MOUNTED SIGN TYPICAL DETAILS NO. 4".
2. Special care shall be taken to insure that the complete hinge and latch assembly will hold the safety railing in a steady manner, free of wobble while in the raised position. Max allowable displacement from vertical at top of railing when latched shall be 1".
3. Safety chain shall be ¼" galvanized steel coil chain, approximately 12 links per foot. Length shall be min which allows lock-up of safety railing. Min of two safety chains at each end of safety railing. Material shall be Grade 43 high test chain ASTM A413.
4. Safety chain is located at the ends of the walkway only but is shown here for clarity.
5. All high strength (HS) bolts shall be snug tightened.

NOTE:
THE CONTRACTOR SHALL VERIFY ALL CONTROLLING FIELD DIMENSIONS BEFORE ORDERING OR FABRICATING ANY MATERIAL.

STANDARD PLAN SHEET NO.
DETAIL NO.

BRANCH CHIEF Jeffrey B. Woody

	BY	CHECKED
DESIGN	A GUTIERREZ	S VU
DETAILS	A R DUDSAK	A GUTIERREZ
QUANTITIES	A GUTIERREZ	S VU

STATE OF CALIFORNIA
DEPARTMENT OF TRANSPORTATION

DIVISION OF ENGINEERING SERVICES
DESIGN AND TECHNICAL SERVICES
SPECIAL DESIGNS BRANCH A

BRIDGE NO. 24-0108
POST MILE –

NORWOOD AVENUE OVERCROSSING
BRIDGE MOUNTED SIGN (BMS) LAYOUT

SDS-15

(ENGLISH) SPECIAL DESIGNS BRANCH BORDER SHEET (REV. 7-1-09)

ORIGINAL SCALE IN INCHES FOR REDUCED PLANS 0 1 2 3

CU 03
EA 379701

DISREGARD PRINTS BEARING EARLIER REVISION DATES

REVISION DATES: 5-28-10 6-14-10

SHEET OF

FILE => spec_des_br_prj/2009sd/03-379701/sds15-norwood.dgn

USERNAME => trmikesl DATE PLOTTED => 03-FEB-2011 TIME PLOTTED => 09:00

DIST	COUNTY	ROUTE	POST MILES TOTAL PROJECT	SHEET No	TOTAL SHEETS
03	Yol,Sac	80	R10.9/R11.7, M0.0/M10.4	528	1012

REGISTERED CIVIL ENGINEER 6/10/10 DATE

9-7-10
PLANS APPROVAL DATE

REGISTERED PROFESSIONAL ENGINEER ANDREW BUI No. C63560 Exp. 9/30/10 CIVIL STATE OF CALIFORNIA

The State of California or its officers or agents shall not be responsible for the accuracy or completeness of electronic copies of this plan sheet.

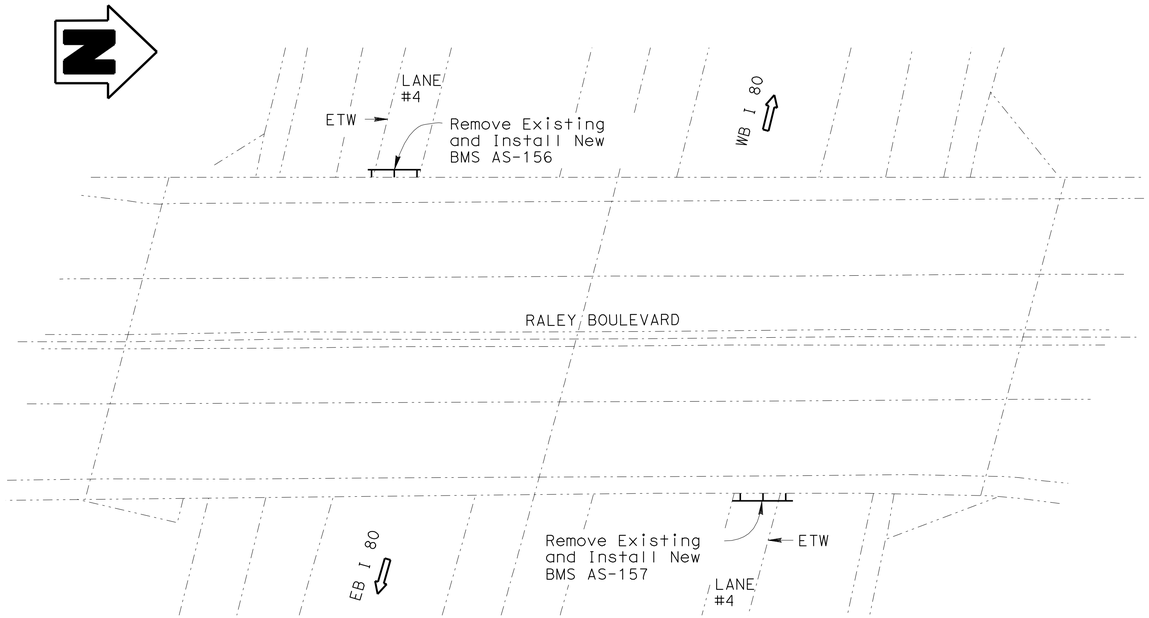

LOCATION PLAN

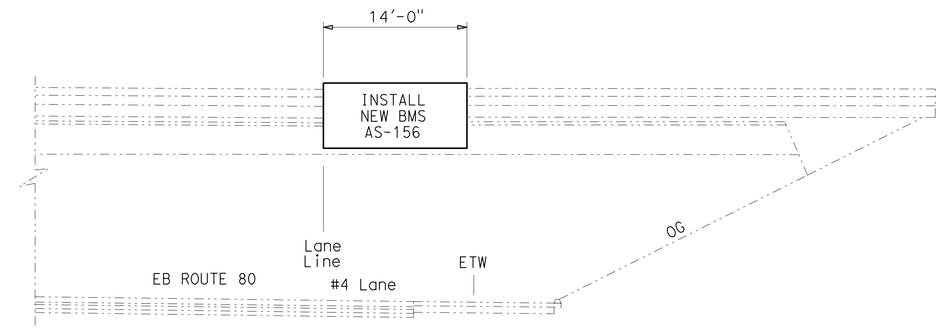

EB ELEVATION

RALEY BLVD OC
24-0105

LEGEND

Existing structure.

New structure.

STANDARD PLANS DATED MAY 2006

A10A ACRONYMS AND ABBREVIATIONS (A-L)
A10B ACRONYMS AND ABBREVIATIONS (M-Z)

Notes:

1. For details not shown, see "STANDARD PLANS MAY 2006".
2. Unless otherwise shown, all steel shall be galvanized after fabrication.
3. Min size fillet weld is ¼" or thickness of thinner part unless noted otherwise.
4. Contractor to provide anchor bolt layout before anchor bolts are placed.
5. For sign location, see "PAVEMENT DELINEATION AND SIGN PLANS".

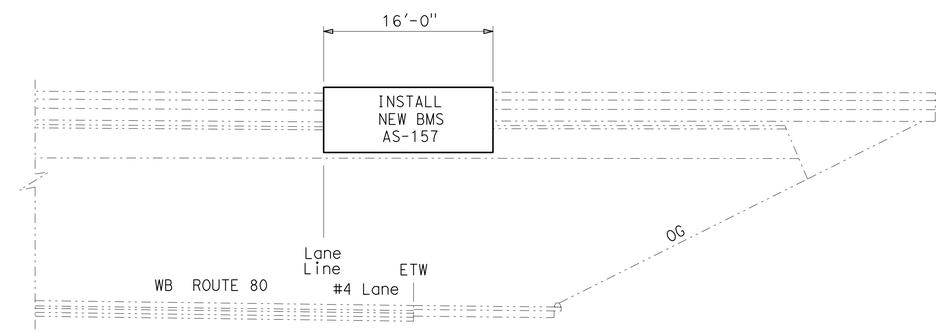

WB ELEVATION

RALEY BLVD OC
24-0105

NOTE:
THE CONTRACTOR SHALL VERIFY ALL CONTROLLING FIELD DIMENSIONS BEFORE ORDERING OR FABRICATING ANY MATERIAL.

No Scale

BRANCH CHIEF Jeffrey B. Woody

	BY	CHECKED
DESIGN	A GUTIERREZ	S VU
DETAILS	A R DUDSAK	A GUTIERREZ
QUANTITIES	A GUTIERREZ	S VU

STATE OF CALIFORNIA
DEPARTMENT OF TRANSPORTATION

DIVISION OF ENGINEERING SERVICES
DESIGN AND TECHNICAL SERVICES
SPECIAL DESIGNS BRANCH A

BRIDGE NO. 24-0105
POST MILE -

RALEY BLVD OVERCROSSING
BRIDGE MOUNTED SIGN (BMS) LOCATION PLAN

SDS-16

(ENGLISH) SPECIAL DESIGNS BRANCH BORDER SHEET (REV. 7-1-09)

ORIGINAL SCALE IN INCHES FOR REDUCED PLANS 0 1 2 3

CU 03
EA 379701

DISREGARD PRINTS BEARING EARLIER REVISION DATES 5-28-10 6-14-10

REVISION DATES | SHEET | OF

FILE => spec_des_br_prj/2009sd/03-379701/sds16-raley.dgn

USERNAME => ttmirkes1 DATE PLOTTED => 03-FEB-2011 TIME PLOTTED => 09:00

DIST	COUNTY	ROUTE	POST MILES TOTAL PROJECT	SHEET No	TOTAL SHEETS
03	Yol,Sac	80	R10.9/R11.7, M0.0/M10.4	529	1012

REGISTERED CIVIL ENGINEER 6/10/10 DATE

9-7-10
PLANS APPROVAL DATE

REGISTERED PROFESSIONAL ENGINEER ANDREW BUI No. C63560 Exp. 9/30/10 CIVIL STATE OF CALIFORNIA

The State of California or its officers or agents shall not be responsible for the accuracy or completeness of electronic copies of this plan sheet.

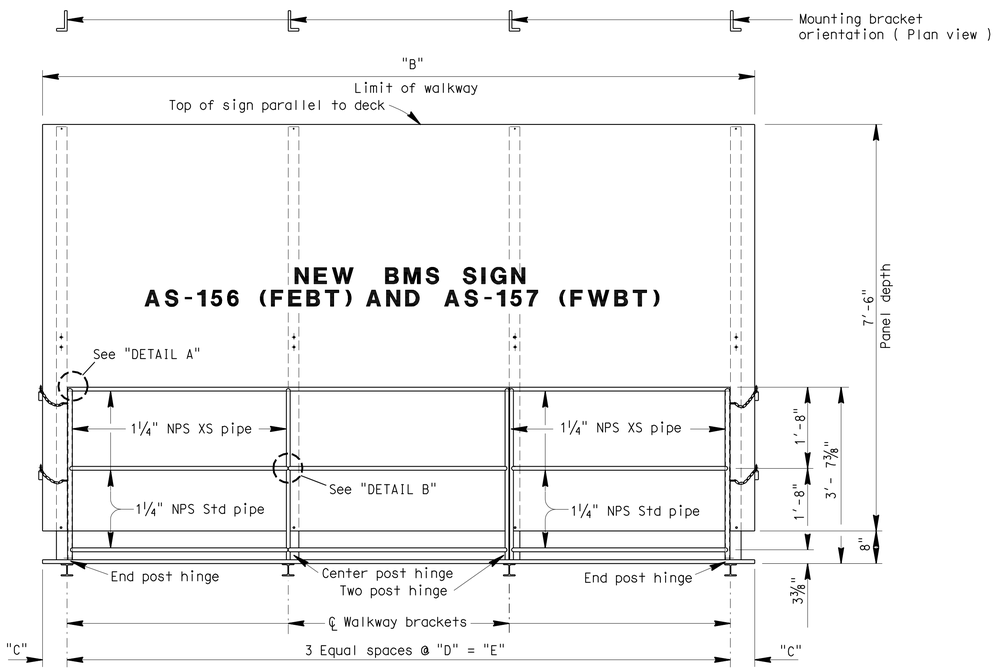

FRONT VIEW

TABLE				
SIGN	"B"	"C"	"D"	"E"
AS-156	14'-0"	1'-0"	4'-0"	12'-0"
AS-157	16'-0"	6"	5'-0"	15'-0"

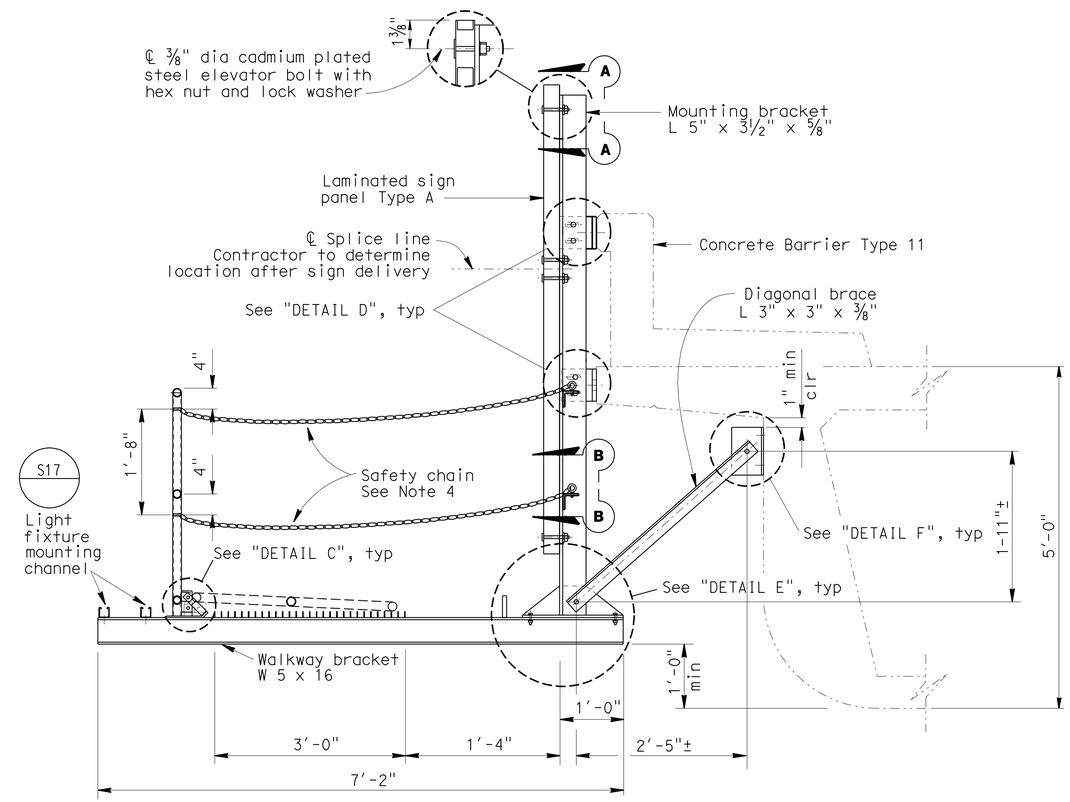

TYPICAL SECTION

No Scale

NOTES:

1. For details not shown, see "BRIDGE MOUNTED SIGN TYPICAL DETAILS NO. 1", "BRIDGE MOUNTED SIGN TYPICAL DETAILS NO. 2", and "BRIDGE MOUNTED SIGN TYPICAL DETAILS NO. 4".
2. Special care shall be taken to insure that the complete hinge and latch assembly will hold the safety railing in a steady manner, free of wobble while in the raised position. Max allowable displacement from vertical at top of railing when latched shall be 1".
3. Safety chain shall be ¼" galvanized steel coil chain, approximately 12 links per foot. Length shall be min which allows lock-up of safety railing. Min of two safety chains at each end of safety railing. Material shall be Grade 43 high test chain ASTM A413.
4. Safety chain is located at the ends of the walkway only but is shown here for clarity.
5. All high strength (HS) bolts shall be snug tightened.

NOTE:
THE CONTRACTOR SHALL VERIFY ALL CONTROLLING FIELD DIMENSIONS BEFORE ORDERING OR FABRICATING ANY MATERIAL.

STANDARD PLAN SHEET NO.
DETAIL NO.

BRANCH CHIEF Jeffrey B. Woody

	BY	CHECKED
DESIGN	A GUTIERREZ	S VU
DETAILS	A R DUDSAK	A GUTIERREZ
QUANTITIES	A GUTIERREZ	S VU

STATE OF CALIFORNIA
DEPARTMENT OF TRANSPORTATION

DIVISION OF ENGINEERING SERVICES
DESIGN AND TECHNICAL SERVICES
SPECIAL DESIGNS BRANCH
A

BRIDGE NO. 24-0105
POST MILE –

RALEY BLVD OVERCROSSING
BRIDGE MOUNTED SIGN (BMS) LAYOUT

SDS-17

(ENGLISH) SPECIAL DESIGNS BRANCH BORDER SHEET (REV. 7-1-09)

ORIGINAL SCALE IN INCHES FOR REDUCED PLANS 0 1 2 3

CU 03
EA 379701

DISREGARD PRINTS BEARING EARLIER REVISION DATES

REVISION DATES: 5-28-10 6-14-10

SHEET OF

FILE => spec_des_br_prj/2009sd/03-379701/sds17-raley.dgn

USERNAME => trmikesl DATE PLOTTED => 03-FEB-2011 TIME PLOTTED => 09:00

DIST	COUNTY	ROUTE	POST MILES TOTAL PROJECT	SHEET No	TOTAL SHEETS
03	Yol,Sac	80	R10.9/R11.7, M0.0/M10.4	530	1012

REGISTERED CIVIL ENGINEER 6/10/10 DATE

9-7-10
PLANS APPROVAL DATE

REGISTERED PROFESSIONAL ENGINEER
ANDREW BUI
No. C63560
Exp. 9/30/10
CIVIL
STATE OF CALIFORNIA

The State of California or its officers or agents shall not be responsible for the accuracy or completeness of electronic copies of this plan sheet.

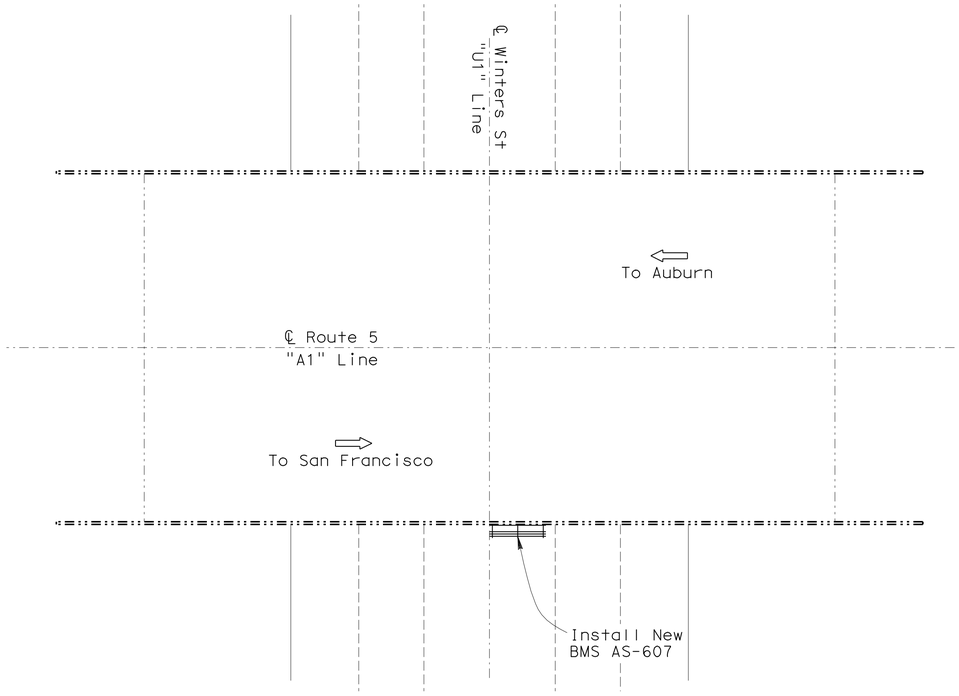

LOCATION PLAN

N

LEGEND

Existing structure.

New structure.

STANDARD PLANS DATED MAY 2006

A10A ACRONYMS AND ABBREVIATIONS (A-L)
A10B ACRONYMS AND ABBREVIATIONS (M-Z)

Notes:

1. For details not shown, see "STANDARD PLANS MAY 2006".
2. Unless otherwise shown, all steel shall be galvanized after fabrication.
3. Min size fillet weld is 1/4" or thickness of thinner part unless noted otherwise.
4. Contractor to provide anchor bolt layout before anchor bolts are placed.
5. For sign location, see "PAVEMENT DELINEATION AND SIGN PLANS".

NOTE:
THE CONTRACTOR SHALL VERIFY ALL CONTROLLING FIELD DIMENSIONS BEFORE ORDERING OR FABRICATING ANY MATERIAL.

STANDARD PLAN SHEET NO.
DETAIL NO.

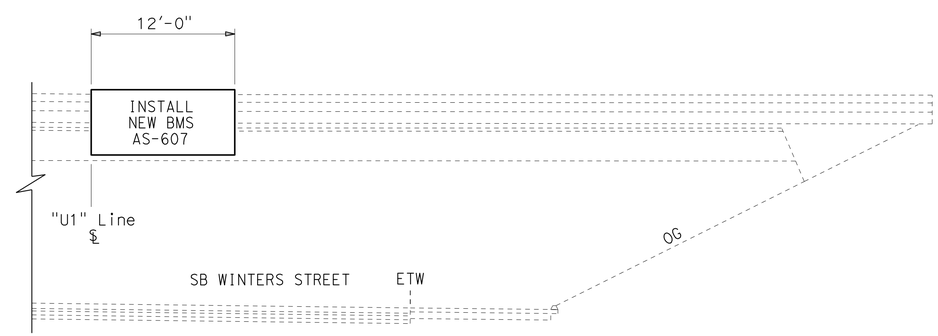

SB ELEVATION

WINTERS STREET UC
24-0205L

No Scale

BRANCH CHIEF Jeffrey B. Woody

DESIGN	BY A GUTIERREZ	CHECKED S VU
DETAILS	BY D W JUSTICE Jr	CHECKED A GUTIERREZ
QUANTITIES	BY A GUTIERREZ	CHECKED S VU

STATE OF CALIFORNIA
DEPARTMENT OF TRANSPORTATION

DIVISION OF ENGINEERING SERVICES
DESIGN AND TECHNICAL SERVICES
SPECIAL DESIGNS BRANCH A

BRIDGE NO. 24-0205L
POST MILE -

WINTERS STREET OVERCROSSING
BRIDGE MOUNTED SIGN (BMS) LOCATION PLAN

SDS-18

(ENGLISH) SPECIAL DESIGNS BRANCH BORDER SHEET (REV. 7-1-09)

ORIGINAL SCALE IN INCHES FOR REDUCED PLANS 0 1 2 3

CU 03
EA 379701

DISREGARD PRINTS BEARING EARLIER REVISION DATES 5-28-10 6-14-10

REVISION DATES | SHEET | OF

FILE => spec_des_br_prj/2009sd/03-379701/sds18-winters.dgn

USERNAME => ttmirkes1 DATE PLOTTED => 03-FEB-2011 TIME PLOTTED => 09:00

DIST	COUNTY	ROUTE	POST MILES TOTAL PROJECT	SHEET No	TOTAL SHEETS
03	Yol,Sac	80	R10.9/R11.7, M0.0/M10.4	531	1012

REGISTERED CIVIL ENGINEER 6/10/10 DATE

9-7-10
PLANS APPROVAL DATE

REGISTERED PROFESSIONAL ENGINEER ANDREW BUI No. C63560 Exp. 9/30/10 CIVIL STATE OF CALIFORNIA

The State of California or its officers or agents shall not be responsible for the accuracy or completeness of electronic copies of this plan sheet.

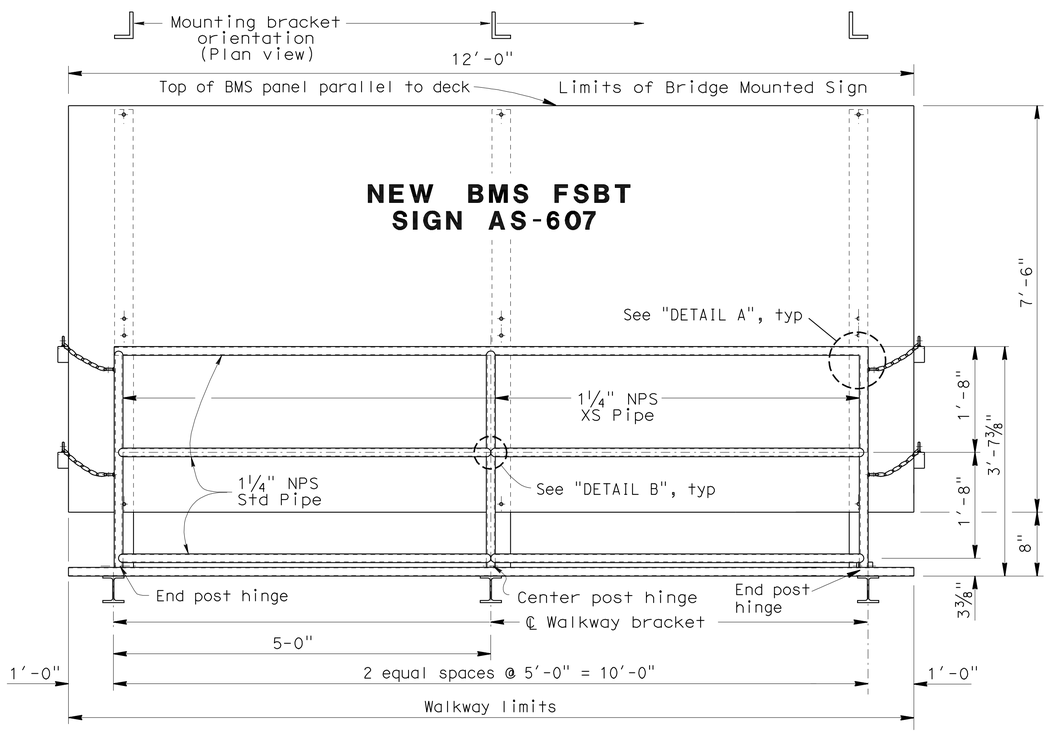

FRONT VIEW

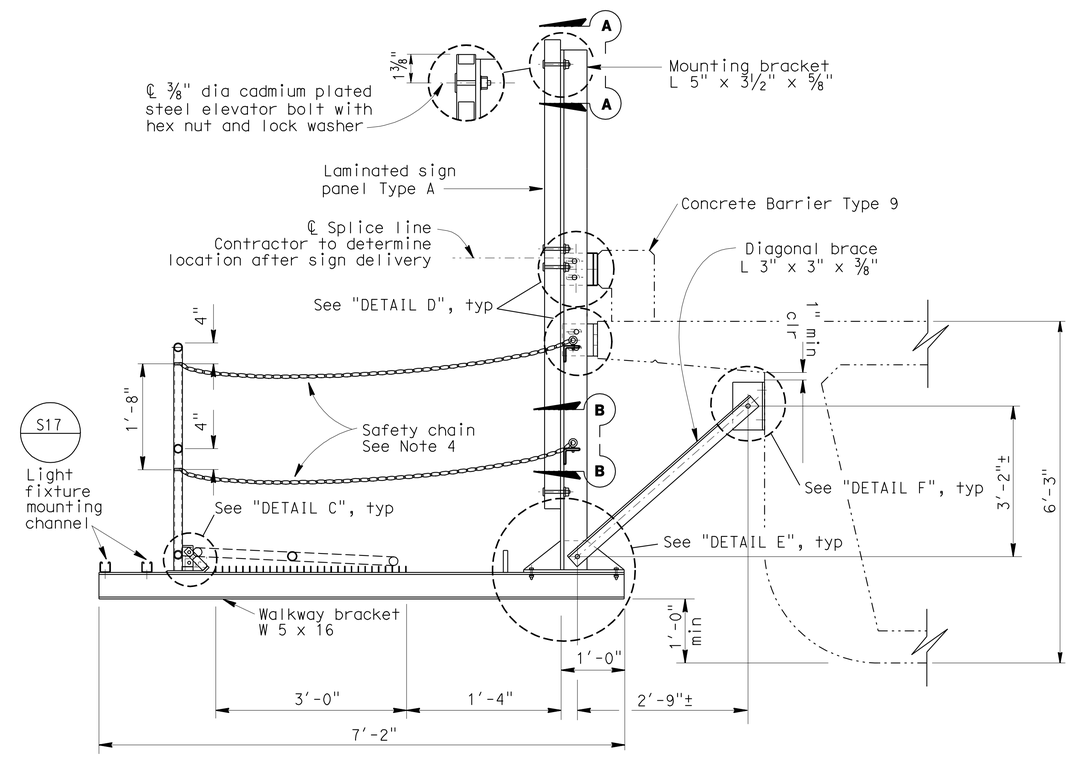

TYPICAL SECTION

No Scale

NOTES:

1. For details not shown, see "BRIDGE MOUNTED SIGN TYPICAL DETAILS NO.1", "BRIDGE MOUNTED SIGN TYPICAL DETAILS NO.2", and "BRIDGE MOUNTED SIGN TYPICAL DETAILS NO.4".
2. Special care shall be taken to insure that the complete hinge and latch assembly will hold the safety railing in a steady manner, free of wobble while in the raised position. Max allowable displacement from vertical at top of railing when latched shall be 1".
3. Safety chain shall be ¼" galvanized steel coil chain, approximately 12 links per foot. Length shall be min which allows lock-up of safety railing. Min of two safety chains at each end of safety railing. Material shall be Grade 43 high test chain ASTM A413.
4. Safety chain is located at the ends of the walkway only but is shown here for clarity.
5. All high strength (HS) bolts shall be snug tightened.

NOTE:
THE CONTRACTOR SHALL VERIFY ALL CONTROLLING FIELD DIMENSIONS BEFORE ORDERING OR FABRICATING ANY MATERIAL.

STANDARD PLAN SHEET NO.
DETAIL NO.

BRANCH CHIEF Jeffrey B Woody	DESIGN	BY A GUTIERREZ	CHECKED S VU
	DETAILS	BY D W JUSTICE Jr	CHECKED A GUTIERREZ
	QUANTITIES	BY A GUTIERREZ	CHECKED S VU

STATE OF CALIFORNIA
DEPARTMENT OF TRANSPORTATION

DIVISION OF ENGINEERING SERVICES
DESIGN AND TECHNICAL SERVICES
SPECIAL DESIGNS BRANCH A

BRIDGE NO. 24-0205L
POST MILE -

WINTERS STREET UNDERCROSSING
BRIDGE MOUNTED SIGN (BMS) LAYOUT

SDS-19

(ENGLISH) SPECIAL DESIGNS BRANCH BORDER SHEET (REV. 7-1-09)

ORIGINAL SCALE IN INCHES FOR REDUCED PLANS 0 1 2 3

CU 03
EA 379701

DISREGARD PRINTS BEARING EARLIER REVISION DATES 5-28-10 6-14-10

REVISION DATES | SHEET | OF

FILE => spec_des_br_prj/2009sd/03-379701/sds19-winters.dgn

USERNAME => trmikest DATE PLOTTED => 03-FEB-2011 TIME PLOTTED => 09:01

DIST	COUNTY	ROUTE	POST MILES TOTAL PROJECT	SHEET No	TOTAL SHEETS
03	Yol,Sac	80	R10.9/R11.7, M0.0/M10.4	532	1012

REGISTERED CIVIL ENGINEER 6/10/10 DATE

9-7-10
PLANS APPROVAL DATE

REGISTERED PROFESSIONAL ENGINEER ANDREW BUI No. C63560 Exp. 9/30/10 CIVIL STATE OF CALIFORNIA

The State of California or its officers or agents shall not be responsible for the accuracy or completeness of electronic copies of this plan sheet.

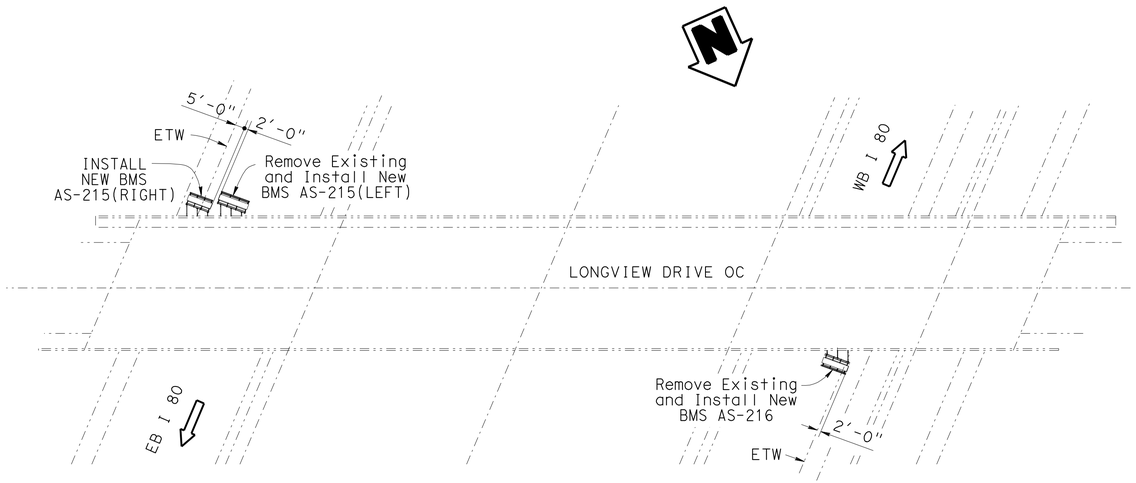

LOCATION PLAN

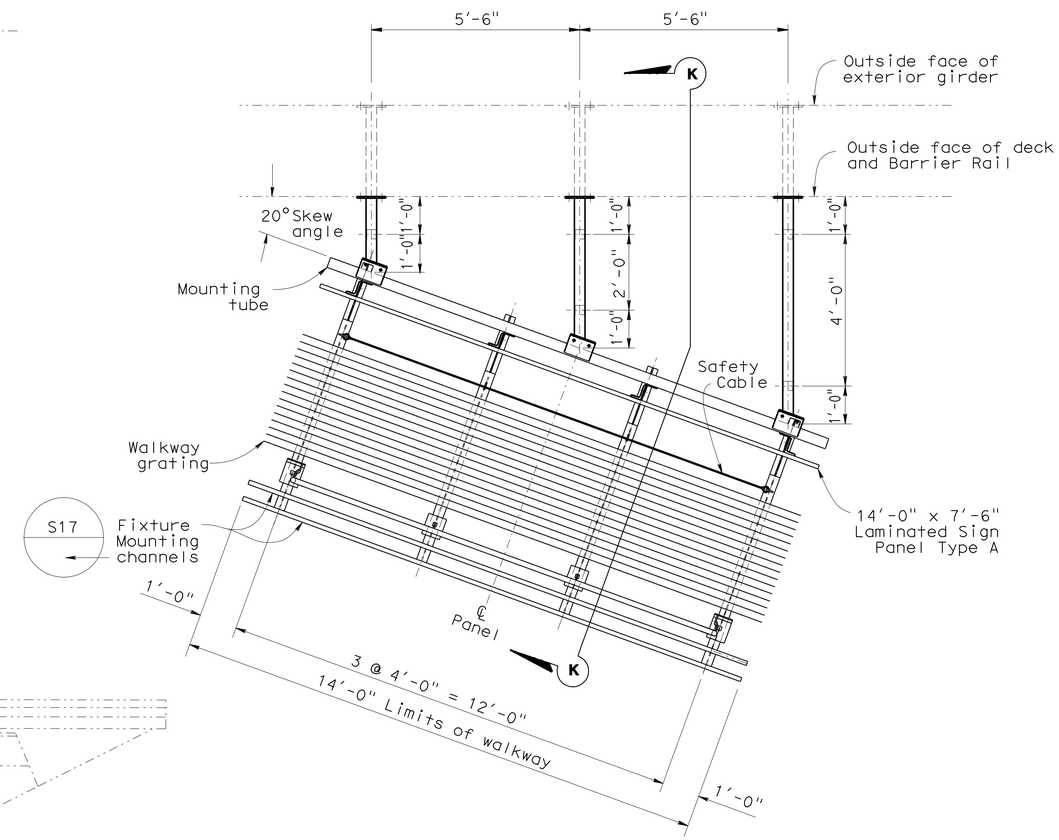

LAYOUT FWBT SIGN AS-216

LEGEND

Existing structure.

New structure.

STANDARD PLANS DATED MAY 2006

A10A ACRONYMS AND ABBREVIATIONS (A-L)
A10B ACRONYMS AND ABBREVIATIONS (M-Z)

Notes:

1. For details not shown, see "STANDARD PLANS MAY 2006".
2. Unless otherwise shown, all steel shall be galvanized after fabrication.
3. Min size fillet weld is ¼" or thickness of thinner part unless noted otherwise.
4. Contractor to provide anchor bolt layout before anchor bolts are placed.
5. For sign location, see "PAVEMENT DELINEATION AND SIGN PLANS".

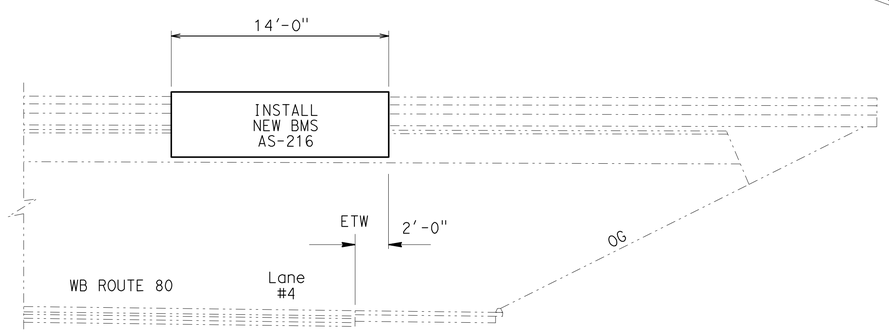

WB ELEVATION

Longview Drive OC
24-0283

NOTE:
THE CONTRACTOR SHALL VERIFY ALL CONTROLLING FIELD DIMENSIONS BEFORE ORDERING OR FABRICATING ANY MATERIAL.

STANDARD PLAN SHEET NO.

DETAIL NO.

No Scale

BRANCH CHIEF	DESIGN	BY A GUTIERREZ	CHECKED S VU
	DETAILS	BY A R DUDSAK	CHECKED A GUTIERREZ
	QUANTITIES	BY A GUTIERREZ	CHECKED S VU

STATE OF CALIFORNIA
DEPARTMENT OF TRANSPORTATION

DIVISION OF ENGINEERING SERVICES
DESIGN AND TECHNICAL SERVICES
SPECIAL DESIGNS BRANCH A

BRIDGE NO. 24-0283
POST MILE –

LONGVIEW DRIVE OVERCROSSING
BRIDGE MOUNTED SIGN (BMS) SKEWED LOCATION PLAN

SDS-20

(ENGLISH) SPECIAL DESIGNS BRANCH BORDER SHEET (REV. 7-1-09)

ORIGINAL SCALE IN INCHES FOR REDUCED PLANS 0 1 2 3

CU 03
EA 379701

DISREGARD PRINTS BEARING EARLIER REVISION DATES 5-28-10 6-14-10

REVISION DATES | SHEET | OF

FILE => spec_des_br_prj/2009sd/03-379701/sds20-longview.dgn

USERNAME => trmikest DATE PLOTTED => 03-FEB-2011 TIME PLOTTED => 09:01

DIST	COUNTY	ROUTE	POST MILES TOTAL PROJECT	SHEET No	TOTAL SHEETS
03	Yol,Sac	80	R10.9/R11.7, M0.0/M10.4	533	1012

REGISTERED CIVIL ENGINEER 6/10/10 DATE

9-7-10
PLANS APPROVAL DATE

REGISTERED PROFESSIONAL ENGINEER ANDREW BUI No. C63560 Exp. 9/30/10 CIVIL STATE OF CALIFORNIA

The State of California or its officers or agents shall not be responsible for the accuracy or completeness of electronic copies of this plan sheet.

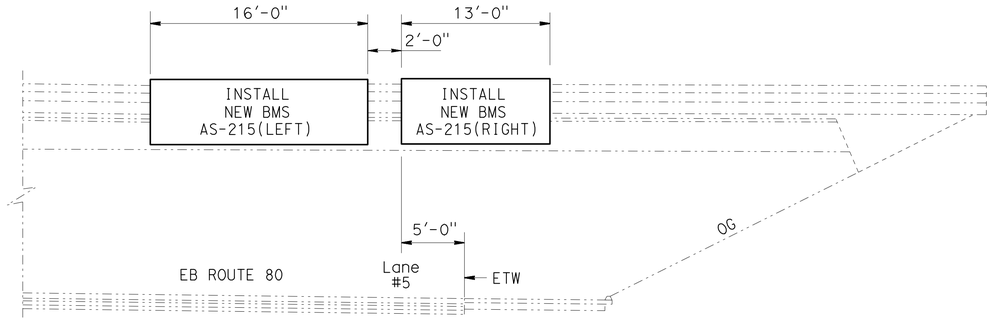

EB ELEVATION

Longview Drive OC
Bridge No. 24-0283

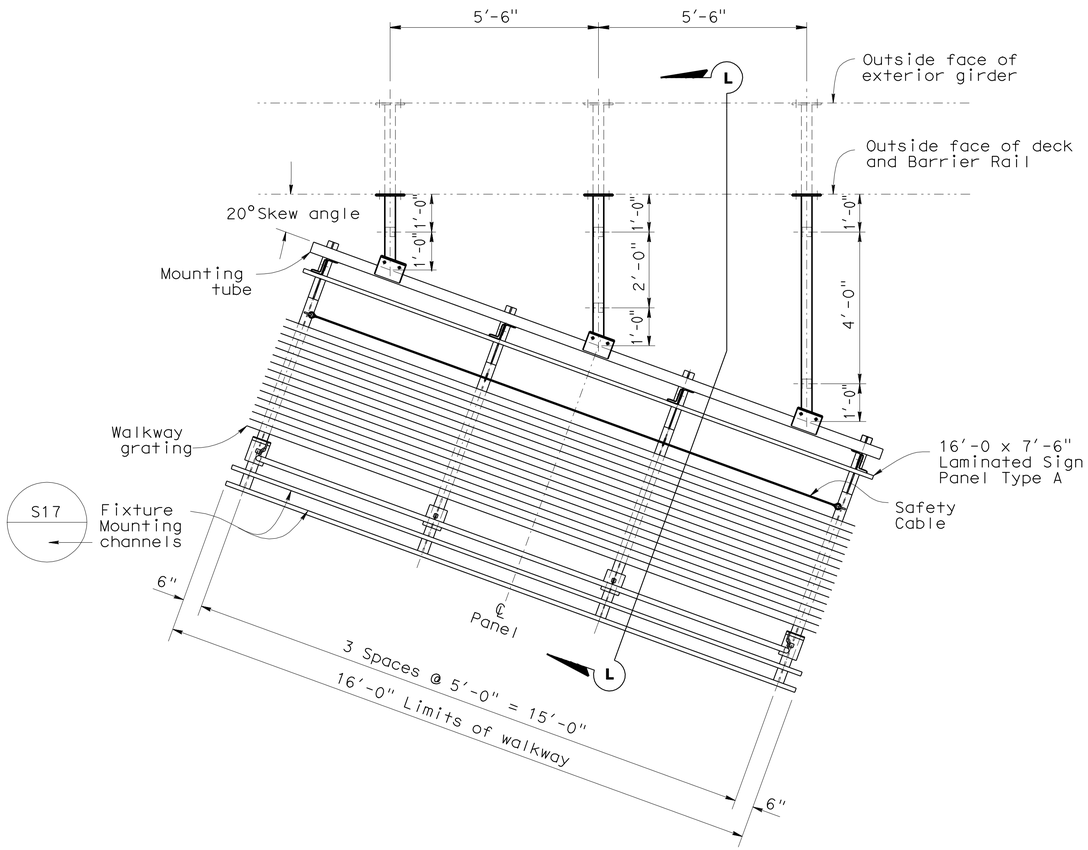

LAYOUT FEBT SIGN AS-215(LEFT)

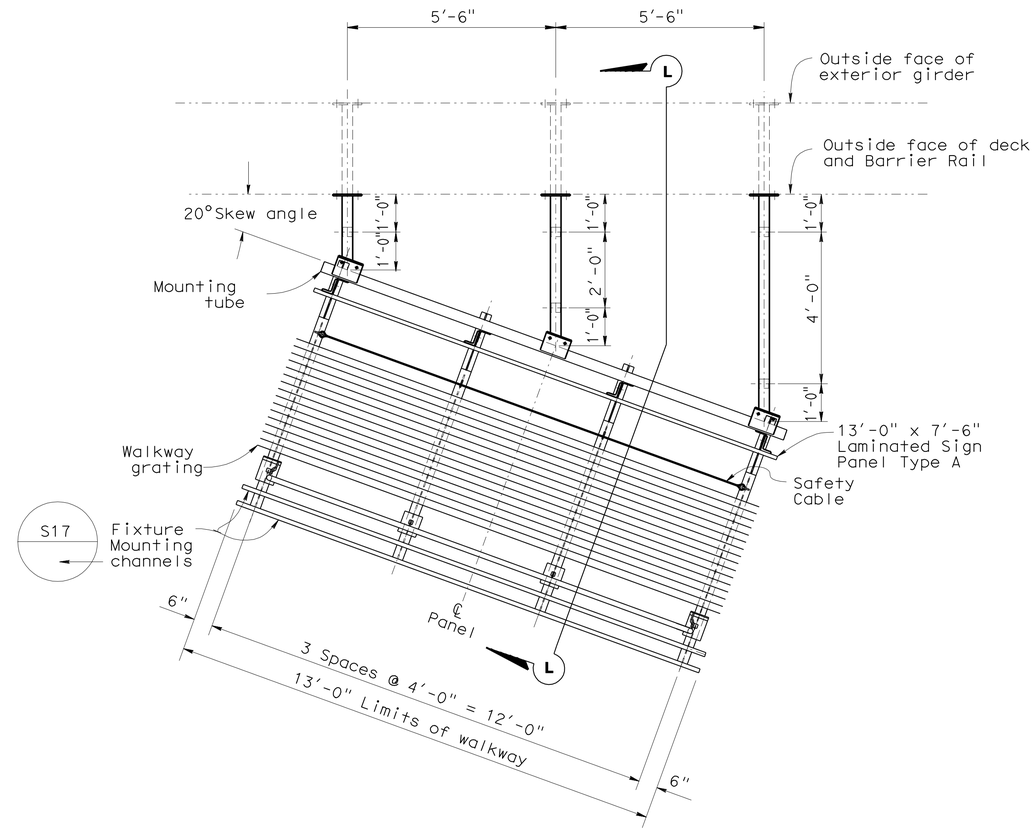

LAYOUT FEBT SIGN AS-215(RIGHT)

NOTE:
THE CONTRACTOR SHALL VERIFY ALL CONTROLLING FIELD DIMENSIONS BEFORE ORDERING OR FABRICATING ANY MATERIAL.

STANDARD PLAN SHEET NO.
DETAIL NO.

No Scale

BRANCH CHIEF Jeffrey B Woody	DESIGN	BY A GUTIERREZ	CHECKED S VU
	DETAILS	BY A R DUDSAK	CHECKED A GUTIERREZ
	QUANTITIES	BY A GUTIERREZ	CHECKED S VU

STATE OF CALIFORNIA
DEPARTMENT OF TRANSPORTATION

DIVISION OF ENGINEERING SERVICES
DESIGN AND TECHNICAL SERVICES
SPECIAL DESIGNS BRANCH A

BRIDGE NO. 24-0283
POST MILE –

LONGVIEW DRIVE OVERCROSSING
BRIDGE MOUNTED SIGN (BMS) SKEWED LOCATION PLAN LAYOUT

SDS-21

(ENGLISH) SPECIAL DESIGNS BRANCH BORDER SHEET (REV. 7-1-09)

ORIGINAL SCALE IN INCHES FOR REDUCED PLANS 0 1 2 3

CU 03
EA 379701

DISREGARD PRINTS BEARING EARLIER REVISION DATES

REVISION DATES: 5-26-10 6-14-10

SHEET OF

FILE => spec_des_br_prj/2009sd/03-379701/sds21-longview.dgn

USERNAME => trmikesl DATE PLOTTED => 03-FEB-2011 TIME PLOTTED => 03:01

DIST	COUNTY	ROUTE	POST MILES TOTAL PROJECT	SHEET No	TOTAL SHEETS
03	Yol,Sac	80	R10.9/R11.7, M0.0/M10.4	534	1012

REGISTERED CIVIL ENGINEER 6/10/10 DATE

9-7-10
PLANS APPROVAL DATE

REGISTERED PROFESSIONAL ENGINEER ANDREW BUI No. C63560 Exp. 9/30/10 CIVIL STATE OF CALIFORNIA

The State of California or its officers or agents shall not be responsible for the accuracy or completeness of electronic copies of this plan sheet.

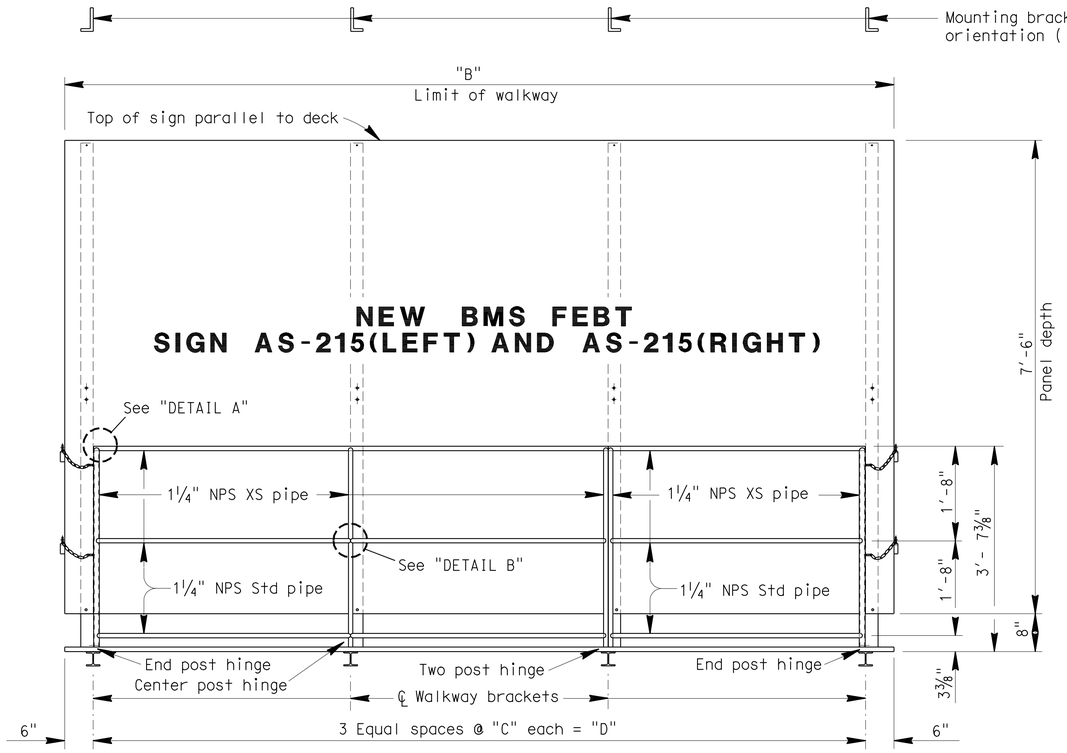

FRONT VIEW

TABLE			
SIGN	"B"	"C"	"D"
AS-215(LEFT)	16'-0"	5'-0"	15'-0"
AS-215(RIGHT)	13'-0"	4'-0"	12'-0"

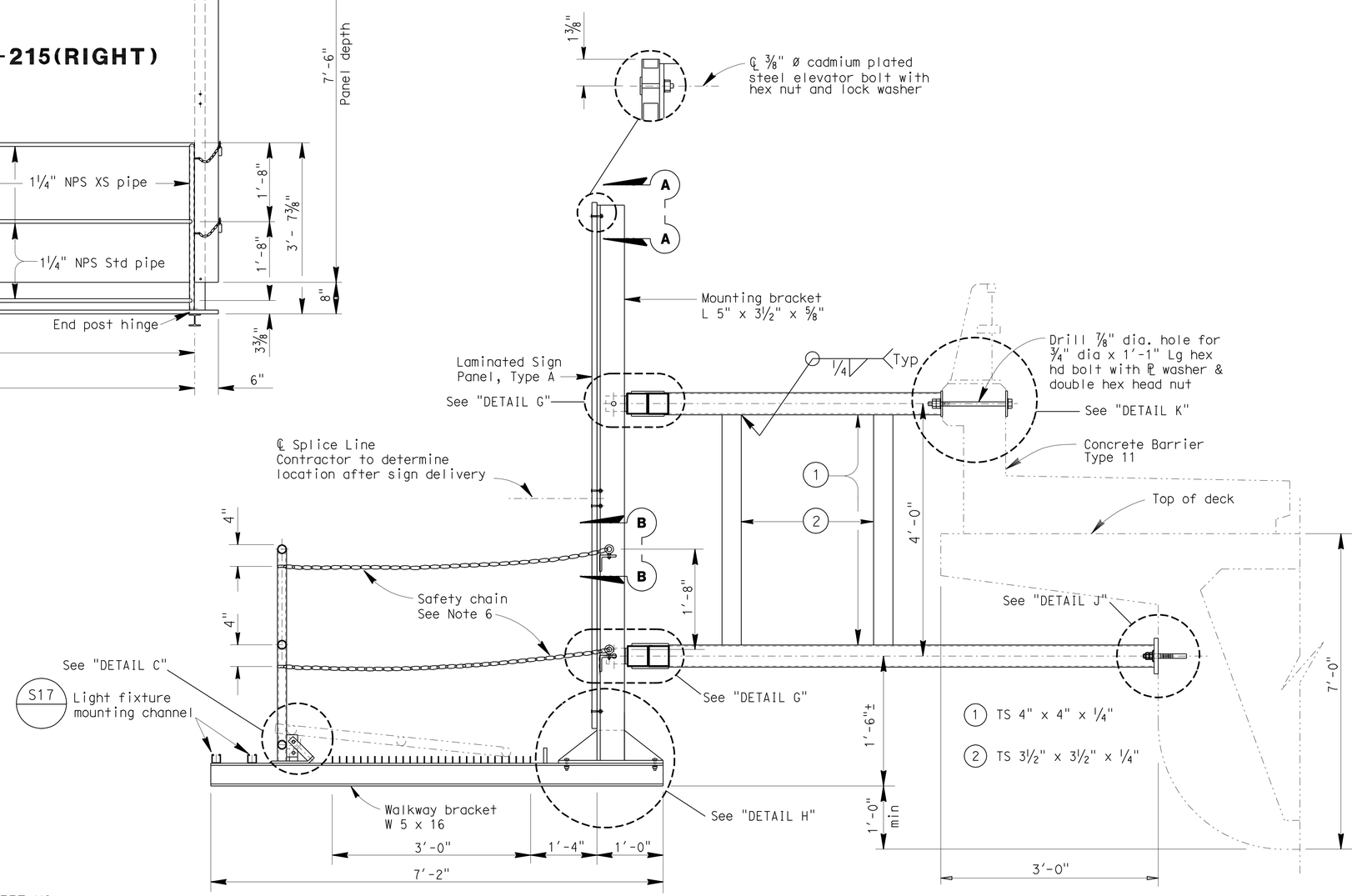

SECTION L-L

No Scale

NOTES:

1. Special care shall be taken to insure that the complete hinge and latch assembly will hold the safety railing in a steady manner, free of wobble while in the raised position. Max allowable displacement from vertical at top of railing when latched shall be 1".
2. Safety chain shall be ¼" galvanized steel coil chain, approximately 12 links per foot. Length shall be min which allows lock-up of safety railing. Min of two safety chains per safety railing. Grade 43 high test chain ASTM A413.
3. For details not shown, see "BRIDGE MOUNTED SIGN TYPICAL DETAILS NO.1", "BRIDGE MOUNTED SIGN TYPICAL DETAILS NO.2", "BRIDGE MOUNTED SIGN TYPICAL DETAILS NO.3", and "BRIDGE MOUNTED SIGN TYPICAL DETAILS NO.4".
4. All high strength (HS) bolts shall be snug tightened.
5. Structure shall be galvanized after fabrication. ¾" Diameter holes in underside of tubing may be added by Contractor to permit draining of galvanizing. Drain hole shall not interfere with welds.
6. Safety chain is located at the ends of the walkway only, but is shown here for clarity.

NOTE:
THE CONTRACTOR SHALL VERIFY ALL CONTROLLING FIELD DIMENSIONS BEFORE ORDERING OR FABRICATING ANY MATERIAL.

STANDARD PLAN SHEET NO.
DETAIL NO.

BRANCH CHIEF Jeffrey B Woody

	BY	CHECKED
DESIGN	A GUTIERREZ	S VU
DETAILS	A R DUDSAK	A GUTIERREZ
QUANTITIES	A GUTIERREZ	S VU

STATE OF CALIFORNIA
DEPARTMENT OF TRANSPORTATION

DIVISION OF ENGINEERING SERVICES
DESIGN AND TECHNICAL SERVICES
SPECIAL DESIGNS BRANCH A

BRIDGE NO. 24-0283
POST MILE –

LONGVIEW DRIVE OVERCROSSING
BRIDGE MOUNTED SIGN (BMS) SKEWED TYPICAL SECTION

SDS-22

(ENGLISH) SPECIAL DESIGNS BRANCH BORDER SHEET (REV. 7-1-09)

ORIGINAL SCALE IN INCHES FOR REDUCED PLANS 0 1 2 3

CU 03
EA 379701

DISREGARD PRINTS BEARING EARLIER REVISION DATES 5-28-10 6-14-10

REVISION DATES | SHEET | OF

FILE => spec_des_br_prj/2009sd/03-379701/sds22-longview.dgn

USERNAME => trmikesl DATE PLOTTED => 03-FEB-2011 TIME PLOTTED => 03:01

DIST	COUNTY	ROUTE	POST MILES TOTAL PROJECT	SHEET No	TOTAL SHEETS
03	Yol,Sac	80	R10.9/R11.7, M0.0/M10.4	535	1012

REGISTERED CIVIL ENGINEER 6/10/10 DATE

9-7-10
PLANS APPROVAL DATE

REGISTERED PROFESSIONAL ENGINEER ANDREW BUI No. C63560 Exp. 9/30/10 CIVIL STATE OF CALIFORNIA

The State of California or its officers or agents shall not be responsible for the accuracy or completeness of electronic copies of this plan sheet.

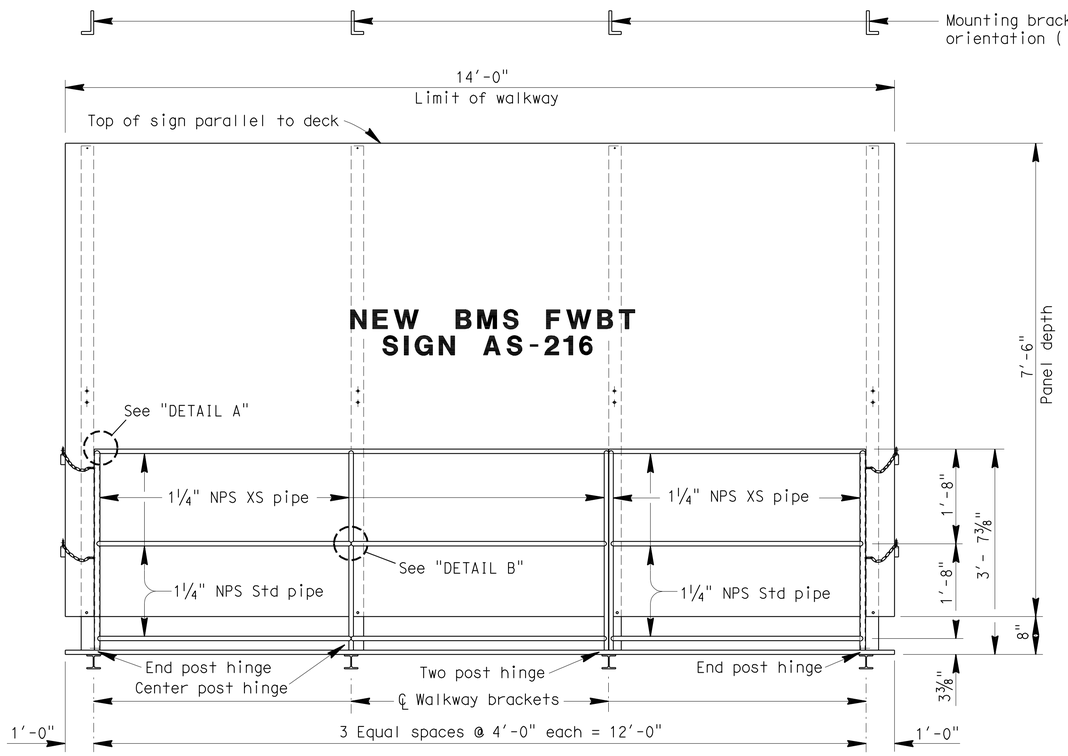

FRONT VIEW

NOTES:

1. Special care shall be taken to insure that the complete hinge and latch assembly will hold the safety railing in a steady manner, free of wobble while in the raised position. Max allowable displacement from vertical at top of railing when latched shall be 1".
2. Safety chain shall be ¼" galvanized steel coil chain, approximately 12 links per foot. Length shall be min which allows lock-up of safety railing. Min of two safety chains per safety railing. Grade 43 high test chain ASTM A413.
3. For details not shown, see "BRIDGE MOUNTED SIGN TYPICAL DETAILS NO.1", "BRIDGE MOUNTED SIGN TYPICAL DETAILS NO.2", "BRIDGE MOUNTED SIGN TYPICAL DETAILS NO.3", and "BRIDGE MOUNTED SIGN TYPICAL DETAILS NO.4".
4. All high strength (HS) bolts shall be snug tightened.
5. Structure shall be galvanized after fabrication. ¾" Diameter holes in underside of tubing may be added by Contractor to permit draining of galvanizing. Drain hole shall not interfere with welds.
6. Safety chain is located at the ends of the walkway only, but is shown here for clarity.

NOTE:
THE CONTRACTOR SHALL VERIFY ALL CONTROLLING FIELD DIMENSIONS BEFORE ORDERING OR FABRICATING ANY MATERIAL.

STANDARD PLAN SHEET NO.
DETAIL NO.

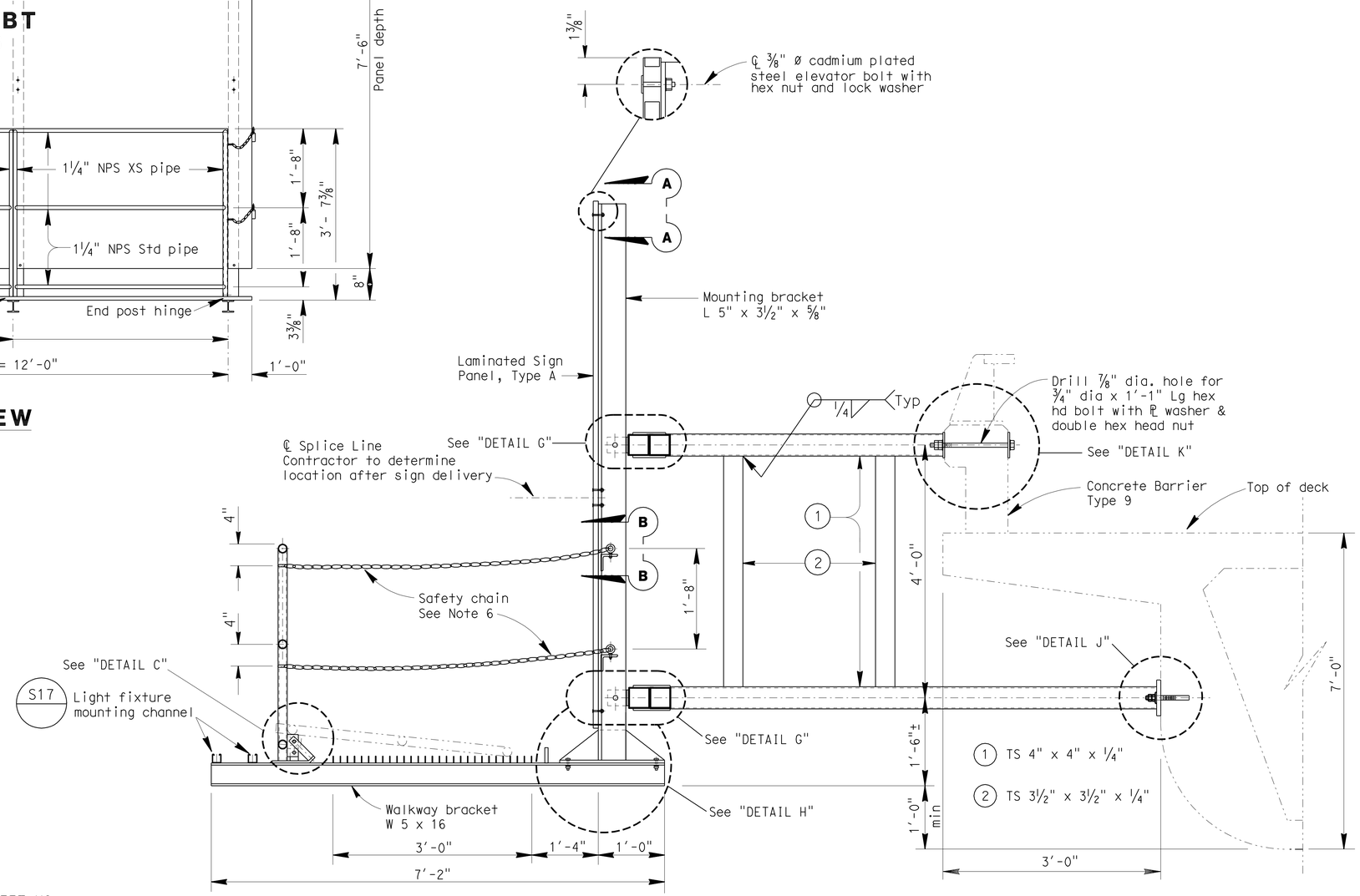

SECTION K-K

No Scale

BRANCH CHIEF Jeffrey B Woody	DESIGN	BY A GUTIERREZ	CHECKED S VU
	DETAILS	BY A R DUDSAK	CHECKED A GUTIERREZ
	QUANTITIES	BY A GUTIERREZ	CHECKED S VU

STATE OF CALIFORNIA
DEPARTMENT OF TRANSPORTATION

DIVISION OF ENGINEERING SERVICES
DESIGN AND TECHNICAL SERVICES
SPECIAL DESIGNS BRANCH
A

BRIDGE NO. 24-0283
POST MILE -

LONGVIEW DRIVE OVERCROSSING
BRIDGE MOUNTED SIGN (BMS) SKEWED TYPICAL SECTION

SDS-23

(ENGLISH) SPECIAL DESIGNS BRANCH BORDER SHEET (REV. 7-1-09)

ORIGINAL SCALE IN INCHES FOR REDUCED PLANS 0 1 2 3

CU 03
EA 379701

DISREGARD PRINTS BEARING EARLIER REVISION DATES 5-28-10 6-14-10

REVISION DATES | SHEET | OF

FILE => spec_des_br_prj/2009sd/03-379701/sds23-longview.dgn

USERNAME => rrmikest DATE PLOTTED => 03-FEB-2011 TIME PLOTTED => 09:01

DIST	COUNTY	ROUTE	POST MILES TOTAL PROJECT	SHEET No	TOTAL SHEETS
03	Yol,Sac	80	R10.9/R11.7, M0.0/M10.4	536	1012

REGISTERED CIVIL ENGINEER 6/10/10 DATE

9-7-10
PLANS APPROVAL DATE

REGISTERED PROFESSIONAL ENGINEER
ANDREW BUI
No. C63560
Exp. 9/30/10
CIVIL
STATE OF CALIFORNIA

The State of California or its officers or agents shall not be responsible for the accuracy or completeness of electronic copies of this plan sheet.

LOCATION PLAN

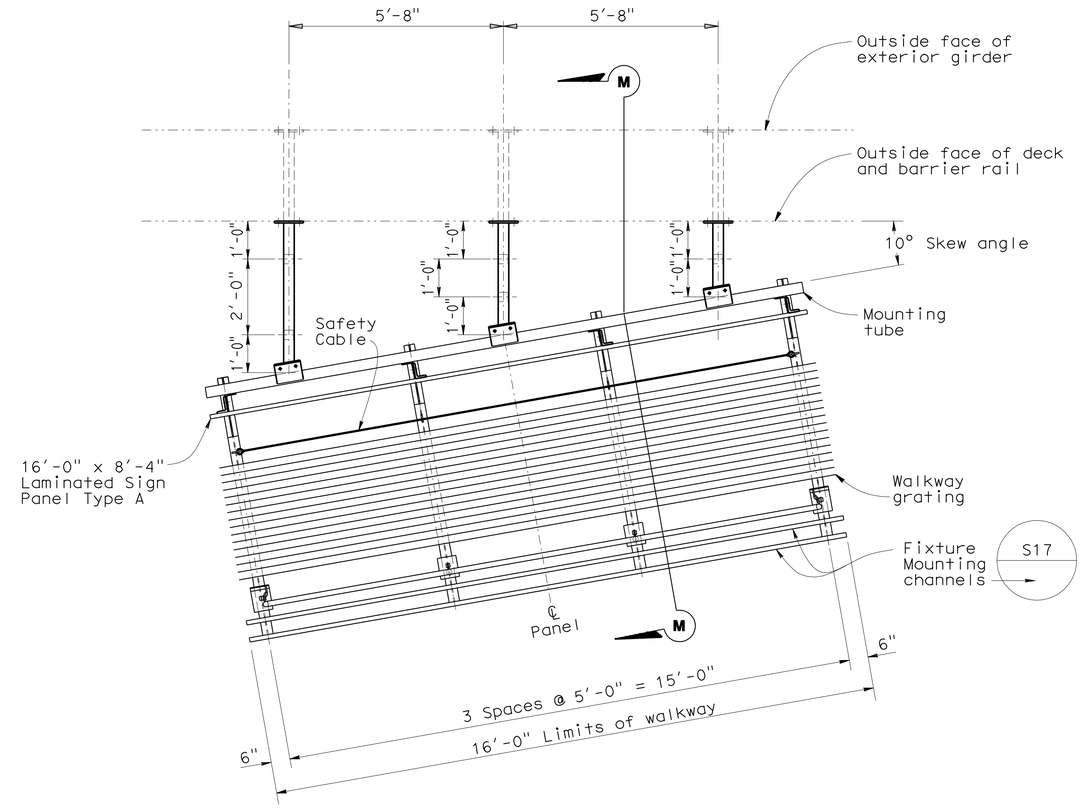

LAYOUT FWBT SIGN AS-608

LEGEND

Existing structure.

New structure.

STANDARD PLANS DATED MAY 2006

A10A ACRONYMS AND ABBREVIATIONS (A-L)
A10B ACRONYMS AND ABBREVIATIONS (M-Z)

Notes:

1. For details not shown, see "STANDARD PLANS MAY 2006".
2. Unless otherwise shown, all steel shall be galvanized after fabrication.
3. Min size fillet weld is 1/4" or thickness of thinner part unless noted otherwise.
4. Contractor to provide anchor bolt layout before anchor bolts are placed.
5. For sign location, see "PAVEMENT DELINEATION AND SIGN PLANS".

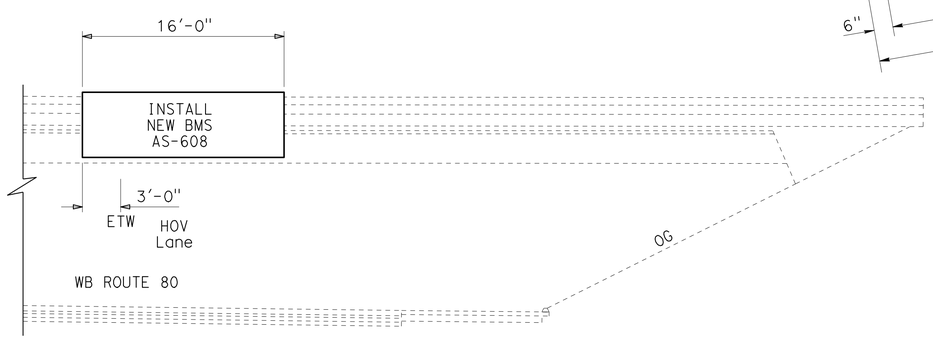

WB ELEVATION

WATT AVENUE OC
24-0290

STANDARD PLAN SHEET NO.

DETAIL NO.

No Scale

NOTE:
THE CONTRACTOR SHALL VERIFY ALL CONTROLLING FIELD DIMENSIONS BEFORE ORDERING OR FABRICATING ANY MATERIAL.

BRANCH CHIEF Jeffrey B Woody	DESIGN	BY A GUTIERREZ	CHECKED S VU
	DETAILS	BY D W JUSTICE Jr	CHECKED A GUTIERREZ
	QUANTITIES	BY A GUTIERREZ	CHECKED S VU

STATE OF CALIFORNIA
DEPARTMENT OF TRANSPORTATION

DIVISION OF ENGINEERING SERVICES
DESIGN AND TECHNICAL SERVICES
SPECIAL DESIGNS BRANCH A

BRIDGE NO. 24-0290
POST MILE –

WATT AVENUE OVERCROSSING
BRIDGE MOUNTED SIGN (BMS) SKEWED LOCATION PLAN AND LAYOUT

SDS-24

(ENGLISH) SPECIAL DESIGNS BRANCH BORDER SHEET (REV. 7-1-09)

ORIGINAL SCALE IN INCHES FOR REDUCED PLANS 0 1 2 3

CU 03
EA 379701

DISREGARD PRINTS BEARING EARLIER REVISION DATES

REVISION DATES: 5-28-10 6-14-10

SHEET OF

FILE => spec_des_br_prj/2009sd/03-379701/sds24-watt.dgn

USERNAME => trmikesl DATE PLOTTED => 03-FEB-2011 TIME PLOTTED => 09:02

DIST	COUNTY	ROUTE	POST MILES TOTAL PROJECT	SHEET No	TOTAL SHEETS
03	Yol,Sac	80	R10.9/R11.7, M0.0/M10.4	537	1012

REGISTERED CIVIL ENGINEER 6/10/10 DATE

9-7-10
PLANS APPROVAL DATE

REGISTERED PROFESSIONAL ENGINEER ANDREW BUI No. C63560 Exp. 9/30/10 CIVIL STATE OF CALIFORNIA

The State of California or its officers or agents shall not be responsible for the accuracy or completeness of electronic copies of this plan sheet.

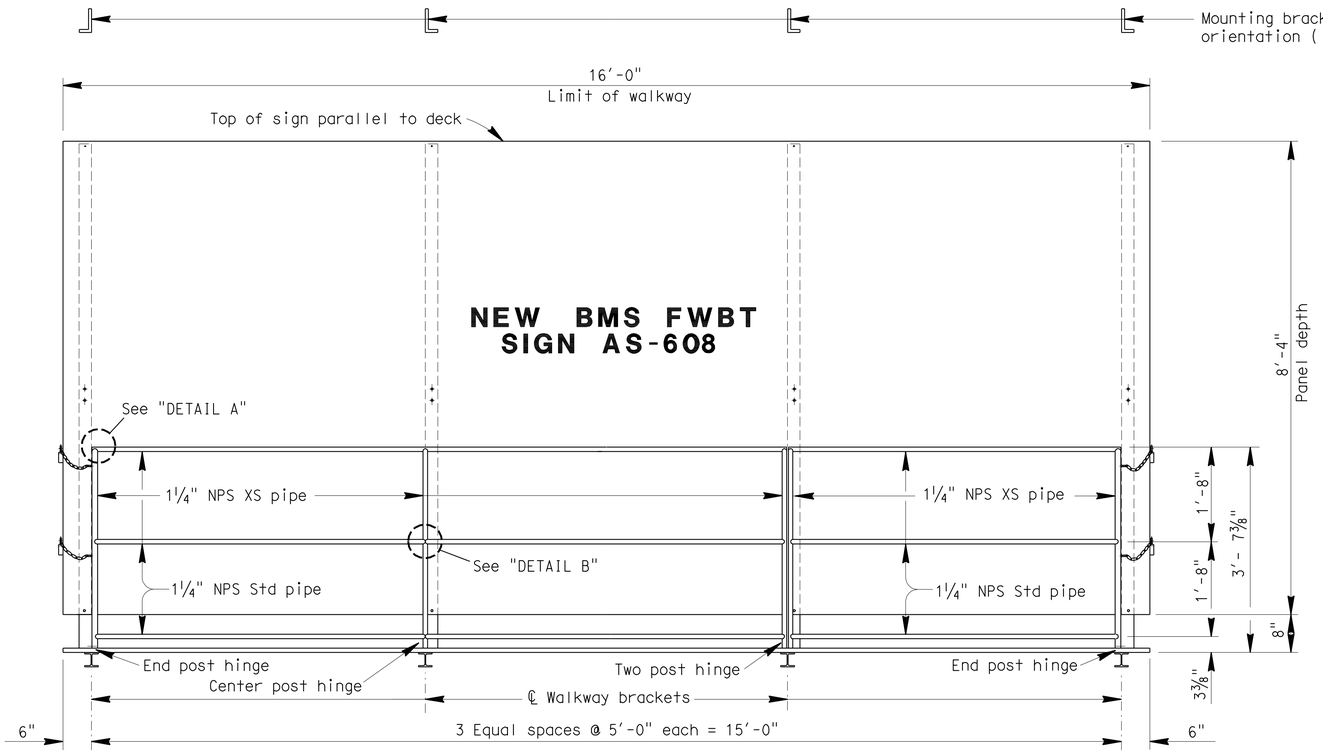

FRONT VIEW

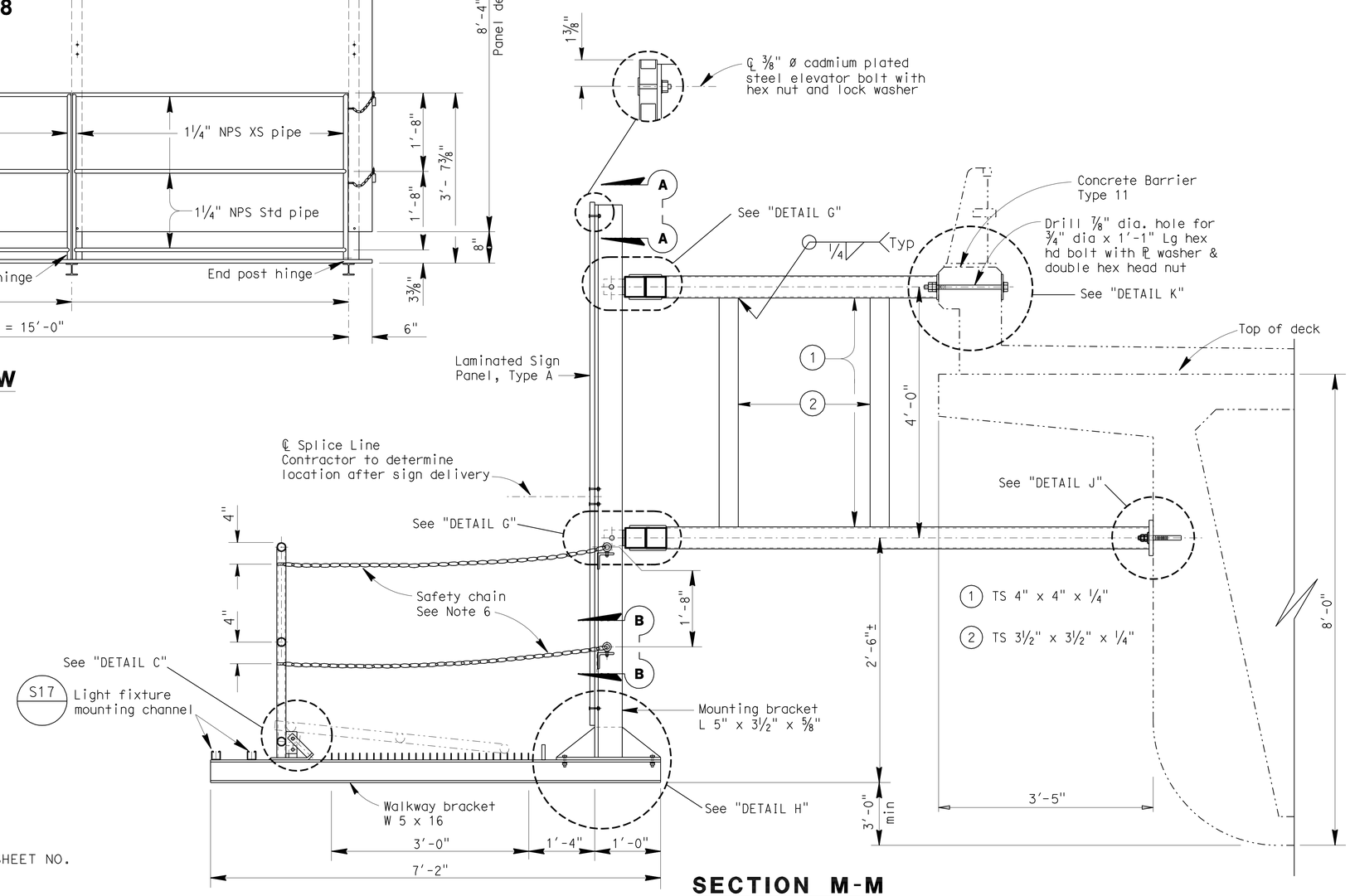

SECTION M-M

No Scale

NOTES:

1. Special care shall be taken to insure that the complete hinge and latch assembly will hold the safety railing in a steady manner, free of wobble while in the raised position. Max allowable displacement from vertical at top of railing when latched shall be 1".
2. Safety chain shall be ¼" galvanized steel coil chain, approximately 12 links per foot. Length shall be min which allows lock-up of safety railing. Min of two safety chains per safety railing. Grade 43 high test chain ASTM A413.
3. For details not shown, see "BRIDGE MOUNTED SIGN TYPICAL DETAILS NO.1", "BRIDGE MOUNTED SIGN TYPICAL DETAILS NO.2", "BRIDGE MOUNTED SIGN TYPICAL DETAILS NO.3", and "BRIDGE MOUNTED SIGN TYPICAL DETAILS NO.4".
4. All high strength (HS) bolts shall be snug tightened.
5. Structure shall be galvanized after fabrication. ¾" Diameter holes in underside of tubing may be added by Contractor to permit draining of galvanizing. Drain hole shall not interfere with welds.
6. Safety chain is located at the ends of the walkway only, but is shown here for clarity.

NOTE:
THE CONTRACTOR SHALL VERIFY ALL CONTROLLING FIELD DIMENSIONS BEFORE ORDERING OR FABRICATING ANY MATERIAL.

STANDARD PLAN SHEET NO.
DETAIL NO.

BRANCH CHIEF Jeffrey B Woody

	BY	CHECKED
DESIGN	A GUTIERREZ	S VU
DETAILS	D W JUSTICE Jr	A GUTIERREZ
QUANTITIES	A GUTIERREZ	S VU

STATE OF CALIFORNIA
DEPARTMENT OF TRANSPORTATION

DIVISION OF ENGINEERING SERVICES
DESIGN AND TECHNICAL SERVICES
SPECIAL DESIGNS BRANCH A

BRIDGE NO. 24-0290
POST MILE -

WATT AVENUE OVERCROSSING
BRIDGE MOUNTED SIGN (BMS) SKEWED TYPICAL SECTION

SDS-25

(ENGLISH) SPECIAL DESIGNS BRANCH BORDER SHEET (REV. 7-1-09)

ORIGINAL SCALE IN INCHES FOR REDUCED PLANS 0 1 2 3

CU 03
EA 379701

DISREGARD PRINTS BEARING EARLIER REVISION DATES 5-28-10 6-14-10

REVISION DATES | SHEET | OF

FILE => spec_des_br_prj/2009sd/03-379701/sds25-watt.dgn

USERNAME => trmikesl DATE PLOTTED => 03-FEB-2011 TIME PLOTTED => 03:02

DIST	COUNTY	ROUTE	POST MILES TOTAL PROJECT	SHEET No	TOTAL SHEETS
03	Yol,Sac	80	R10.9/R11.7, M0.0/M10.4	538	1012

REGISTERED CIVIL ENGINEER 6/10/10 DATE

9-7-10
PLANS APPROVAL DATE

REGISTERED PROFESSIONAL ENGINEER ANDREW BUI No. C63560 Exp. 9/30/10 CIVIL STATE OF CALIFORNIA

The State of California or its officers or agents shall not be responsible for the accuracy or completeness of electronic copies of this plan sheet.

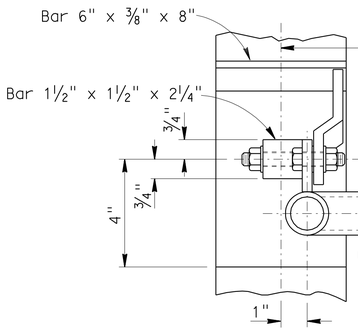

END POST HINGE

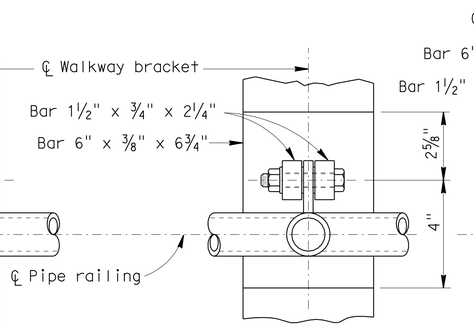

CENTER POST WELDED HINGE - PLAN

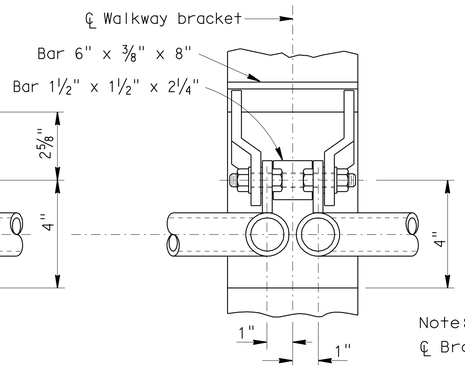

TWO POST HINGE

Note:
℄ Bracket = ℄ Welded hinge

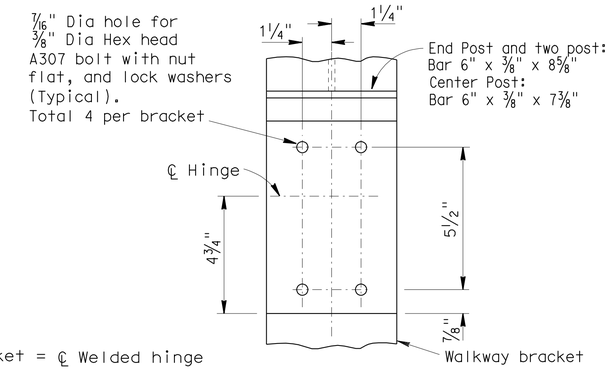

TYPICAL BOLTED (ALTERNATIVE) HINGED CONNECTION

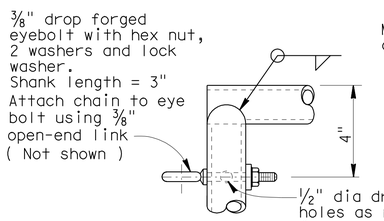

DETAIL A

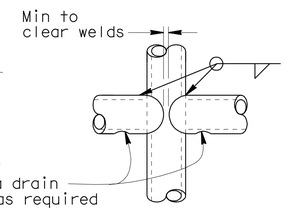

DETAIL B

Note: Alternative venting methods may be used if approved by the Engineer.

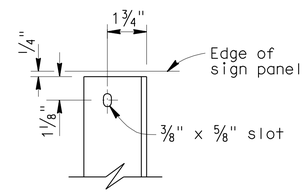

SECTION A-A

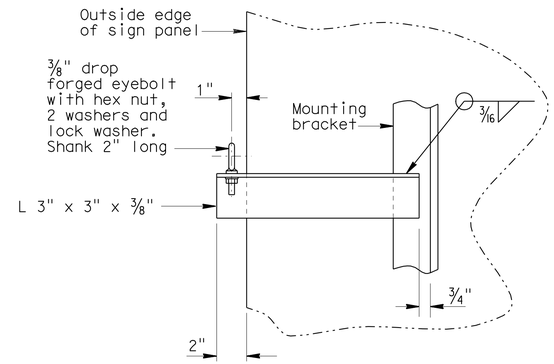

SECTION B-B

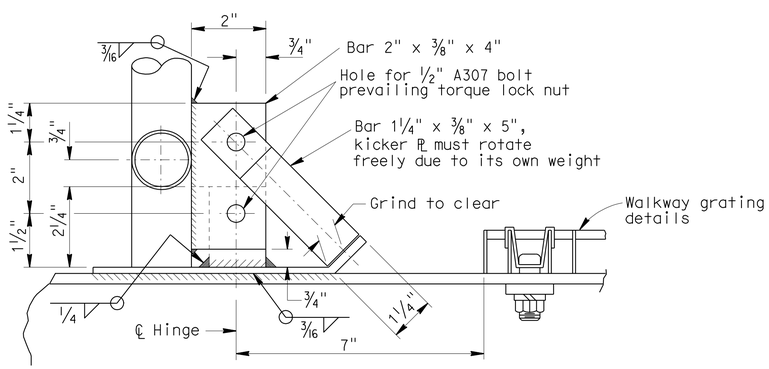

DETAIL C

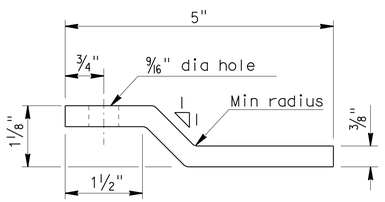

PLAN - KICKER BAR

NOTE:
THE CONTRACTOR SHALL VERIFY ALL CONTROLLING FIELD DIMENSIONS BEFORE ORDERING OR FABRICATING ANY MATERIAL.

No Scale

BRANCH CHIEF	DESIGN	BY A GUTIERREZ	CHECKED S VU
	DETAILS	BY D W JUSTICE Jr	CHECKED A GUTIERREZ
	QUANTITIES	BY A GUTIERREZ	CHECKED S VU

STATE OF CALIFORNIA
DEPARTMENT OF TRANSPORTATION

DIVISION OF ENGINEERING SERVICES
DESIGN AND TECHNICAL SERVICES
SPECIAL DESIGNS BRANCH

BRIDGE NO. N/A
POST MILE –

SIGN DETAILS
BRIDGE MOUNTED SIGN (BMS) TYPICAL DETAILS NO. 1

SDS-26

(ENGLISH) SPECIAL DESIGNS BRANCH BORDER SHEET (REV. 7-1-09)

ORIGINAL SCALE IN INCHES FOR REDUCED PLANS 0 1 2 3

CU 03
EA 379701

DISREGARD PRINTS BEARING EARLIER REVISION DATES

REVISION DATES: 5-28-10 6-14-10

SHEET OF

FILE => spec_des_br_prj/2009sd/03-379701/sds26-details1.dgn

USERNAME => trmikesi DATE PLOTTED => 03-FEB-2011 TIME PLOTTED => 09:02

DIST	COUNTY	ROUTE	POST MILES TOTAL PROJECT	SHEET No	TOTAL SHEETS
03	Yol,Sac	80	R10.9/R11.7, M0.0/M10.4	539	1012

REGISTERED CIVIL ENGINEER 6/10/10 DATE

9-7-10
PLANS APPROVAL DATE

REGISTERED PROFESSIONAL ENGINEER ANDREW BUI No. C63560 Exp. 9/30/10 CIVIL STATE OF CALIFORNIA

The State of California or its officers or agents shall not be responsible for the accuracy or completeness of electronic copies of this plan sheet.

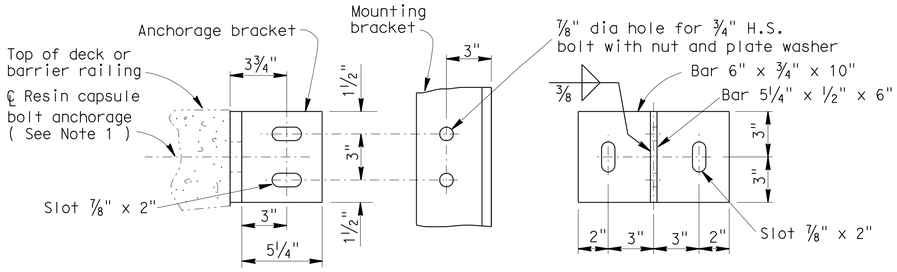

DETAIL D

Note:

Where new resin capsule bolt anchorage coincides with Type 7 fence post or existing bridge mounted sign anchorage, adjust new mounting bracket to create a minimum distance of 6" measured from the ℄ of nearest resin capsule bolt anchorage to the ℄ fence post or ℄ existing bridge mounted sign anchorage, or as approved by the Engineer.

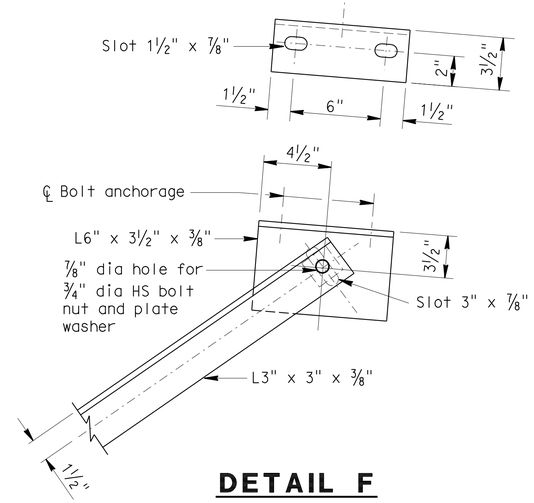

DETAIL F

NOTES:

1. Resin capsule bolts shall not interfere with existing railing anchorages.
2. Resin capsule anchorage is subject to approval of engineer. Installation procedure shall comply with manufacturer's instructions.
3. Unless otherwise shown all steel shall be galvanized after fabrication.
4. Existing bridge mounted sign anchors shall be cut flush with edge of deck by mechanical means. Damage to concrete surface resulting from cut shall be repaired at the Contractor's expense to the Engineers satisfaction. Cut ends of anchors shall be coated with 2 coats of zinc rich primer.
5. Resin capsule bolt anchors shall be installed in sound concrete free of cracks or delamination.

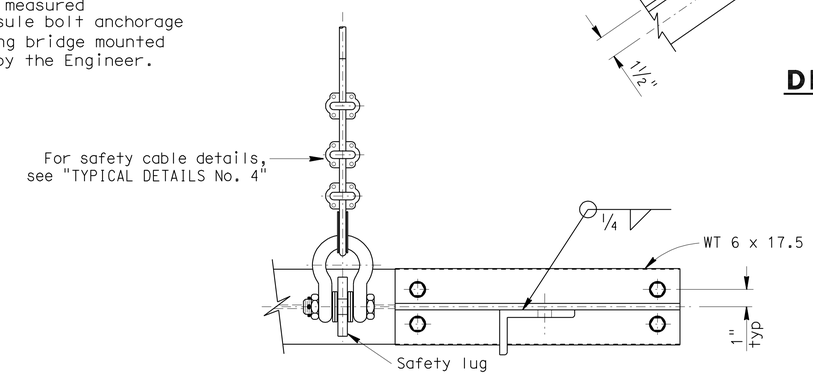

SECTION C-C

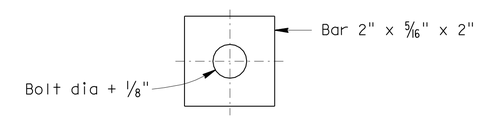

PLATE WASHER

FOR ALL SLOTTED HOLES

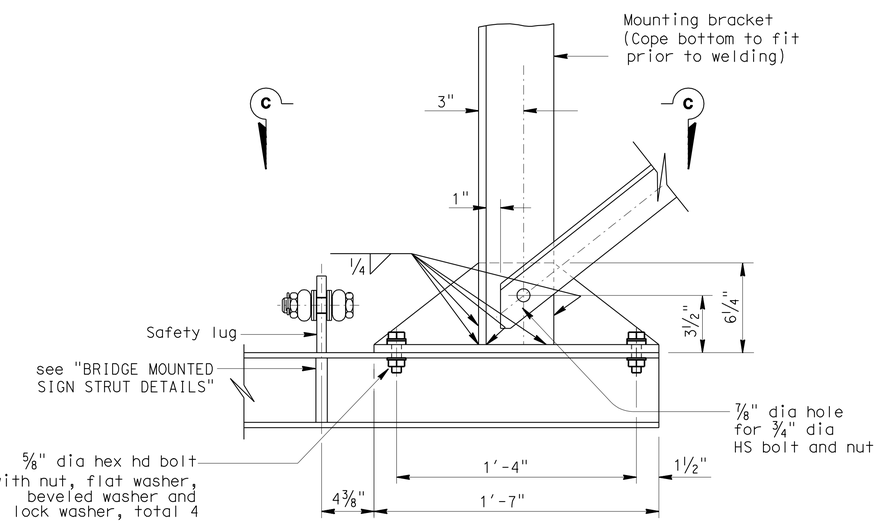

DETAIL E

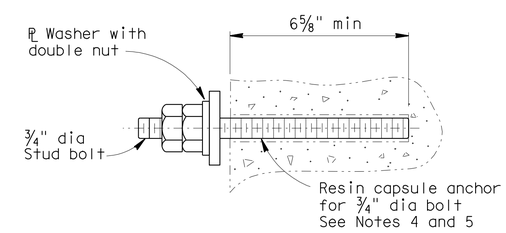

RESIN CAPSULE BOLT ANCHORAGE

NOTE:
THE CONTRACTOR SHALL VERIFY ALL CONTROLLING FIELD DIMENSIONS BEFORE ORDERING OR FABRICATING ANY MATERIAL.

No Scale

BRANCH CHIEF Jeffrey B Woody	DESIGN	BY A GUTIERREZ	CHECKED S VU
	DETAILS	BY D W JUSTICE Jr	CHECKED A GUTIERREZ
	QUANTITIES	BY A GUTIERREZ	CHECKED S VU

STATE OF CALIFORNIA
DEPARTMENT OF TRANSPORTATION

DIVISION OF ENGINEERING SERVICES
DESIGN AND TECHNICAL SERVICES
SPECIAL DESIGNS BRANCH A

BRIDGE NO. N/A
POST MILE –

SIGN DETAILS
BRIDGE MOUNTED SIGN (BMS) TYPICAL DETAILS NO. 2

SDS-27

(ENGLISH) SPECIAL DESIGNS BRANCH BORDER SHEET (REV. 7-1-09)

ORIGINAL SCALE IN INCHES FOR REDUCED PLANS 0 1 2 3

CU 03
EA 379701

DISREGARD PRINTS BEARING EARLIER REVISION DATES → 5-26-10 6-14-10

REVISION DATES | SHEET | OF

FILE => spec_des_br_prj/2009sd/03-379701/sds27-details2.dgn

USERNAME => trmikesi DATE PLOTTED => 03-FEB-2011 TIME PLOTTED => 03:02

DIST	COUNTY	ROUTE	POST MILES TOTAL PROJECT	SHEET No	TOTAL SHEETS
03	Yol,Sac	80	R10.9/R11.7, M0.0/M10.4	540	1012

REGISTERED CIVIL ENGINEER 6/10/10 DATE

9-7-10
PLANS APPROVAL DATE

REGISTERED PROFESSIONAL ENGINEER ANDREW BUI No. C63560 Exp. 9/30/10 CIVIL STATE OF CALIFORNIA

The State of California or its officers or agents shall not be responsible for the accuracy or completeness of electronic copies of this plan sheet.

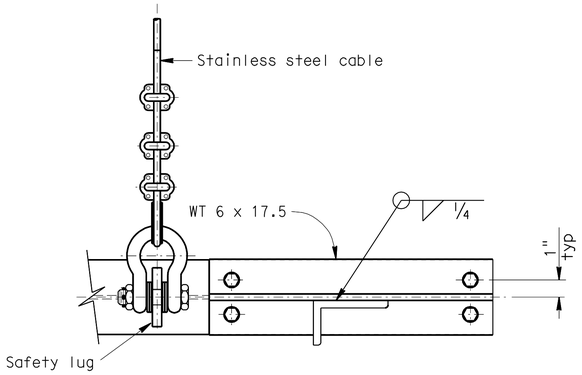

SECTION D-D

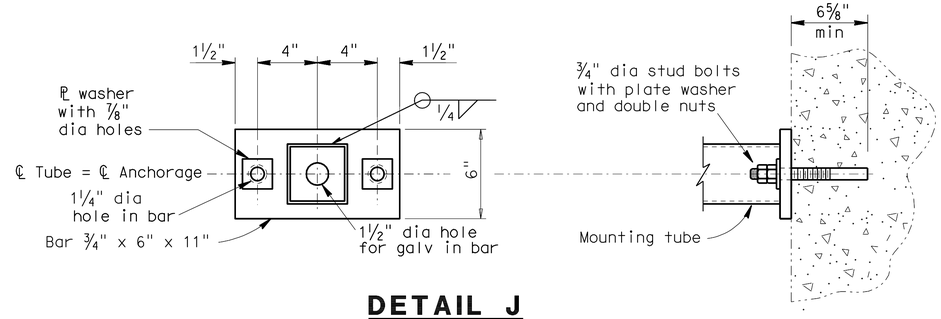

DETAIL J

RESIN CAPSULE BOLT ANCHORAGE (BOTTOM)

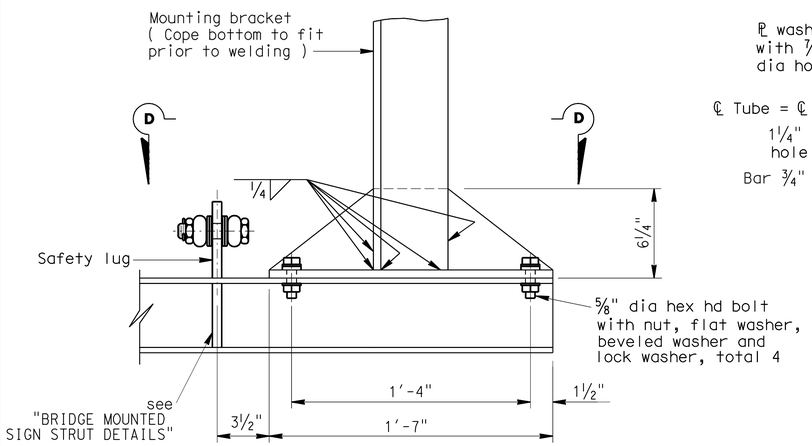

DETAIL H

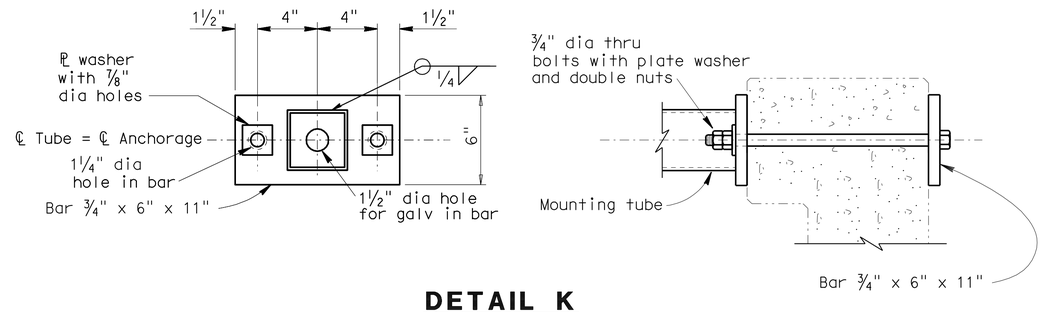

DETAIL K

RESIN CAPSULE BOLT ANCHORAGE (TOP)

Note: Bottom CIP anchorage shall not interfere with bridge prestressing ducts.

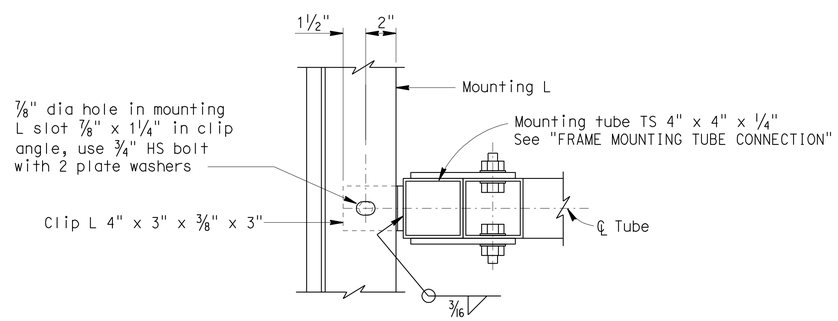

DETAIL G

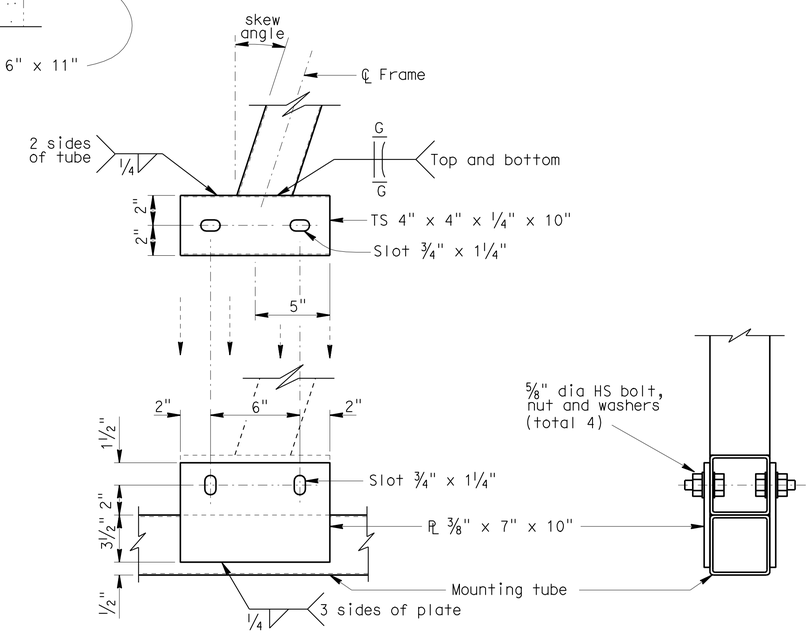

PLAN

SIDE VIEW

FRAME MOUNTING TUBE CONNECTION

No Scale

NOTE:
THE CONTRACTOR SHALL VERIFY ALL CONTROLLING FIELD DIMENSIONS BEFORE ORDERING OR FABRICATING ANY MATERIAL.

BRANCH CHIEF	DESIGN	BY A GUTIERREZ	CHECKED S VU
	DETAILS	BY D W JUSTICE Jr	CHECKED A GUTIERREZ
	QUANTITIES	BY A GUTIERREZ	CHECKED S VU

STATE OF CALIFORNIA
DEPARTMENT OF TRANSPORTATION

DIVISION OF ENGINEERING SERVICES
DESIGN AND TECHNICAL SERVICES
SPECIAL DESIGNS BRANCH A

BRIDGE NO. N/A
POST MILE -

SIGN DETAILS

BRIDGE MOUNTED SIGN (BMS) TYPICAL DETAILS NO. 3

SDS-28

(ENGLISH) SPECIAL DESIGNS BRANCH BORDER SHEET (REV. 7-1-09)

ORIGINAL SCALE IN INCHES FOR REDUCED PLANS 0 1 2 3

CU 03
EA 379701

DISREGARD PRINTS BEARING EARLIER REVISION DATES 5-28-10 6-14-10

REVISION DATES | SHEET | OF

FILE => spec_des_br_prj/2009sd/03-379701/sds28-details3.dgn

USERNAME => ttmirkes1 DATE PLOTTED => 03-FEB-2011 TIME PLOTTED => 09:02

DIST	COUNTY	ROUTE	POST MILES TOTAL PROJECT	SHEET No	TOTAL SHEETS
03	Yol,Sac	80	R10.9/R11.7, M0.0/M10.4	541	1012

REGISTERED CIVIL ENGINEER 6/10/10 DATE

9-7-10
PLANS APPROVAL DATE

REGISTERED PROFESSIONAL ENGINEER ANDREW BUI No. C63560 Exp. 9/30/10 CIVIL STATE OF CALIFORNIA

The State of California or its officers or agents shall not be responsible for the accuracy or completeness of electronic copies of this plan sheet.

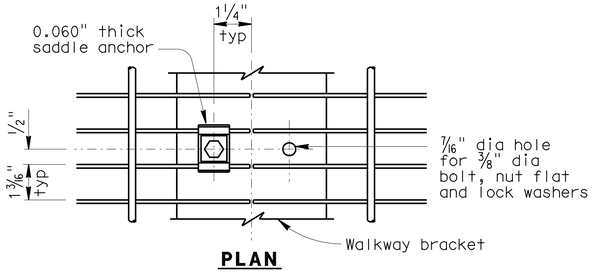

PLAN

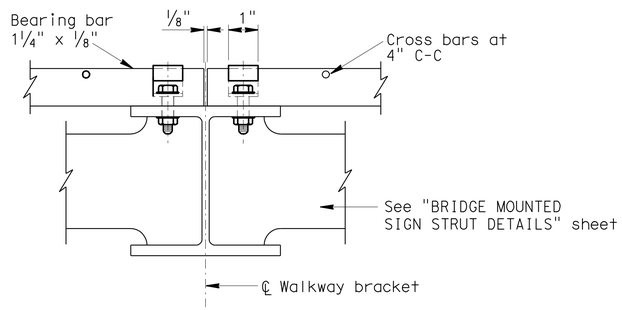

WALKWAY GRATING DETAILS

(Shown at splice)

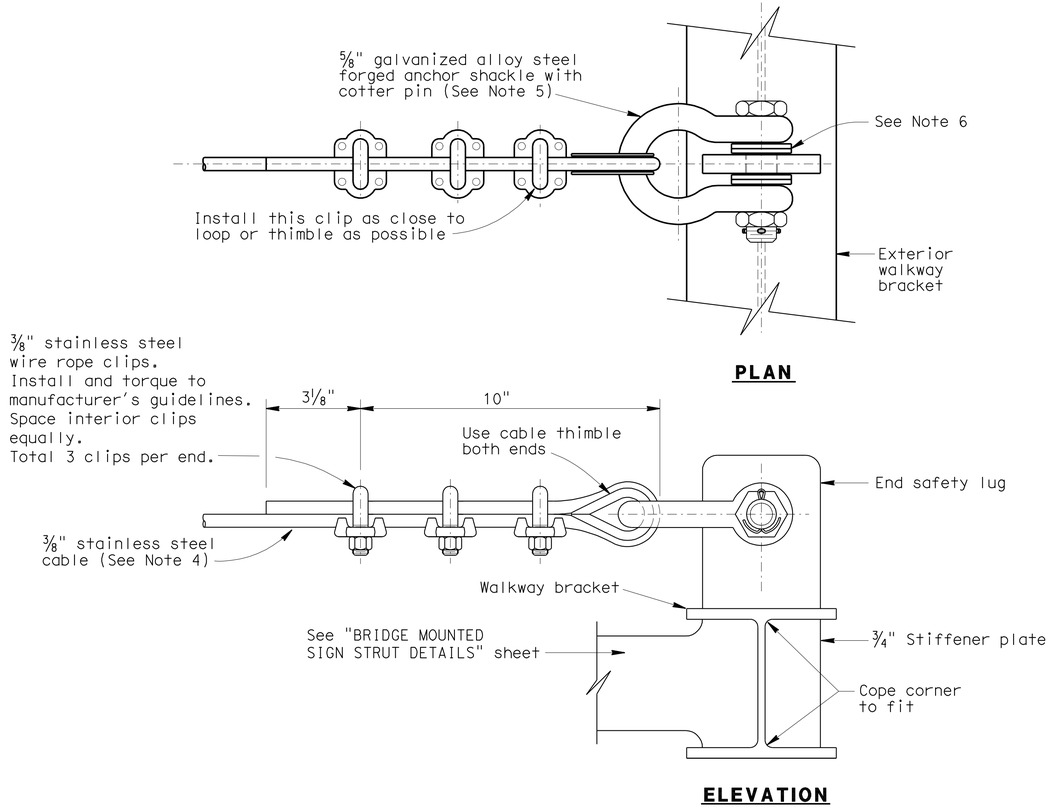

PLAN

ELEVATION

END VIEW SAFETY CABLE

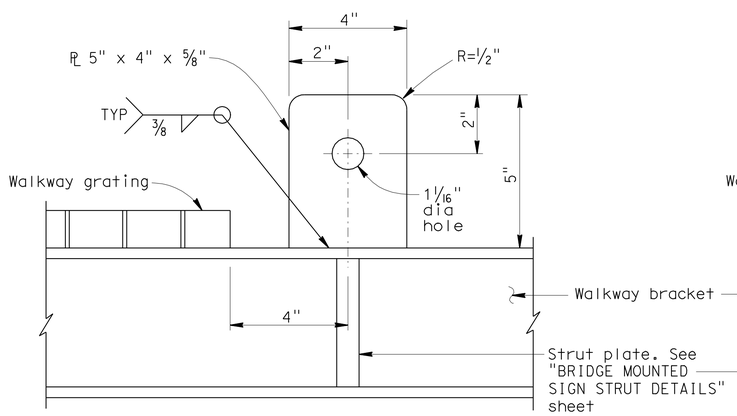

INTERIOR SAFETY LUG DETAIL

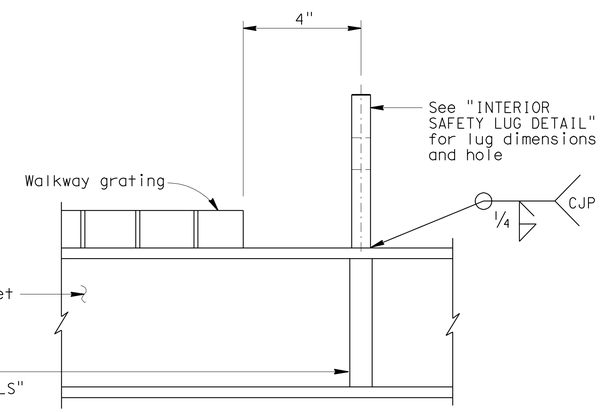

END SAFETY LUG DETAIL

NOTES:

1. Welded type grating shall have 1¼" x ⅛" bearing bars at 1³⁄₁₆" centers with ¼" diameter (or equal) cross bars at 4" centers. If mechanical lock grating is used, it shall be equal in strength to the welded type. Alternate hold-down clips may be submitted for approval.
2. Walkway grating and light fixture mounting channels to be continuous (no splices) over as many walkway brackets as practical and consistent with fabrication, ease of handling and assembly.
3. Contractor may substitute 1⅝" x 1⅝" x .1084" cont-slot steel channel with pre-punched slots not larger than ¹³⁄₃₂" x 3". Slots shall be at bottom of channel and shall be parallel to channel. Slots shall be spaced not closer than 4" center to center.
4. Stainless steel cable shall be plain with 7 x 19 class strand core construction using Type 302 or 304 alloy stainless steel strands. Minimum cable breaking strength shall be 10,000 pounds. Cable shall be free of kinks, knots, or deformation and shall be continuous between end lugs. Splices not allowed. Safety cable shall not be prestretched.
5. Shackle shall be galvanized steel with working load limit of 10,000 pounds.
6. Place an equal amount of washers on each side to align cable with end lug without restricting shackle bolt rotation or contacting cable.
7. Prior to tightening cable clips at exterior anchorage, slack in cable shall be removed by the full effort of a typical construction worker.

NOTE:
THE CONTRACTOR SHALL VERIFY ALL CONTROLLING FIELD DIMENSIONS BEFORE ORDERING OR FABRICATING ANY MATERIAL.

No Scale

BRANCH CHIEF Jeffrey B Woody

	BY	CHECKED
DESIGN	A GUTIERREZ	S VU
DETAILS	D W JUSTICE Jr	A GUTIERREZ
QUANTITIES	A GUTIERREZ	S VU

STATE OF CALIFORNIA
DEPARTMENT OF TRANSPORTATION

DIVISION OF ENGINEERING SERVICES
DESIGN AND TECHNICAL SERVICES
SPECIAL DESIGNS BRANCH
A

BRIDGE NO. N/A
POST MILE –

SIGN DETAILS
BRIDGE MOUNTED SIGN (BMS) TYPICAL DETAILS NO. 4

SDS-29

(ENGLISH) SPECIAL DESIGNS BRANCH BORDER SHEET (REV. 7-1-09)

ORIGINAL SCALE IN INCHES FOR REDUCED PLANS 0 1 2 3

CU 03
EA 379701

DISREGARD PRINTS BEARING EARLIER REVISION DATES 5-28-10 6-14-10

REVISION DATES | SHEET | OF

FILE => spec_des_br_prj/2009sd/03-379701/sds29-details4.dgn

USERNAME => trmikest DATE PLOTTED => 03-FEB-2011 TIME PLOTTED => 09:03

DIST	COUNTY	ROUTE	POST MILES TOTAL PROJECT	SHEET No	TOTAL SHEETS
03	Yol,Sac	80	R10.9/R11.7, M0.0/M10.4	542	1012

REGISTERED CIVIL ENGINEER 6/10/10 DATE

9-7-10
PLANS APPROVAL DATE

REGISTERED PROFESSIONAL ENGINEER ANDREW BUI No. C63560 Exp. 9/30/10 CIVIL STATE OF CALIFORNIA

The State of California or its officers or agents shall not be responsible for the accuracy or completeness of electronic copies of this plan sheet.

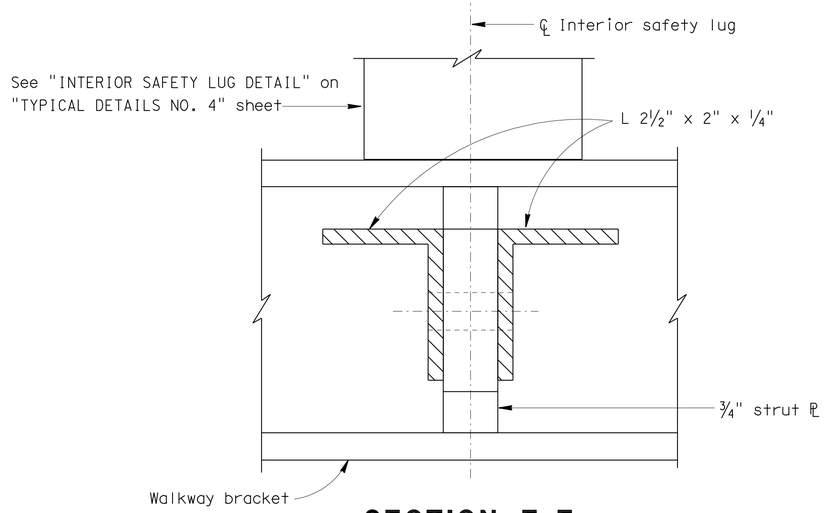

SECTION E-E

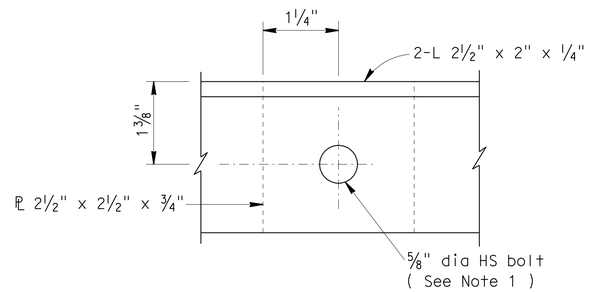

FILLER PLATE (TYP)

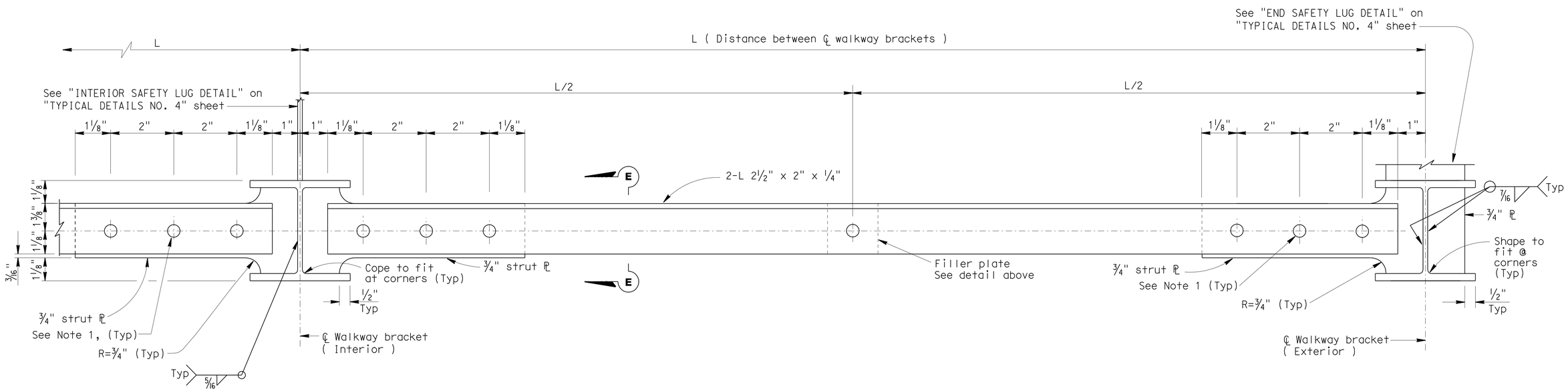

INTERIOR SAFETY LUG LOCATION (TYP)

STRUT SYSTEM (TYP)

(Continuous between end safety lug locations)

END SAFETY LUG LOCATION (TYP)

NOTE:

1. Drill ¾" dia hole for ⅝" dia HS bolt, 2 hardened washers and nut.

NOTE:
THE CONTRACTOR SHALL VERIFY ALL CONTROLLING FIELD DIMENSIONS BEFORE ORDERING OR FABRICATING ANY MATERIAL.

No Scale

BRANCH CHIEF Jeffrey B Woody

	BY	CHECKED
DESIGN	A GUTIERREZ	S VU
DETAILS	D W JUSTICE Jr	A GUTIERREZ
QUANTITIES	A GUTIERREZ	S VU

STATE OF CALIFORNIA
DEPARTMENT OF TRANSPORTATION

DIVISION OF ENGINEERING SERVICES
DESIGN AND TECHNICAL SERVICES
SPECIAL DESIGNS BRANCH A

BRIDGE NO. N/A
POST MILE –

SIGN DETAILS
BRIDGE MOUNTED SIGN (BMS) STRUT DETAILS

SDS-30

(ENGLISH) SPECIAL DESIGNS BRANCH BORDER SHEET (REV. 7-1-09)

ORIGINAL SCALE IN INCHES FOR REDUCED PLANS 0 1 2 3

CU 03
EA 379701

DISREGARD PRINTS BEARING EARLIER REVISION DATES 5-28-10 6-14-10

REVISION DATES | SHEET | OF

FILE => spec_des_br_prj/2009sd/03-379701/sds30-strutdetails.dgn

USERNAME => trmikest DATE PLOTTED => 03-FEB-2011 TIME PLOTTED => 09:03

DIST	COUNTY	ROUTE	POST MILES TOTAL PROJECT	SHEET No	TOTAL SHEETS
03	Yol,Sac	80	R10.9/R11.7, M0.0/M10.4	543	1012

REGISTERED CIVIL ENGINEER 6/10/10 DATE

9-7-10
PLANS APPROVAL DATE

REGISTERED PROFESSIONAL ENGINEER ANDREW BUI No. C63560 Exp. 9/30/10 CIVIL STATE OF CALIFORNIA

The State of California or its officers or agents shall not be responsible for the accuracy or completeness of electronic copies of this plan sheet.

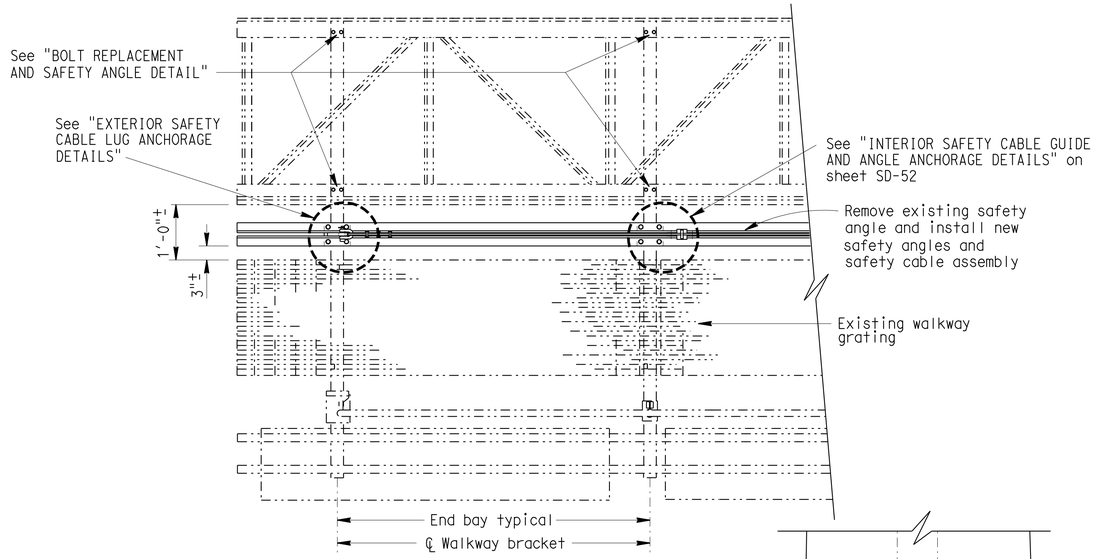

PLAN

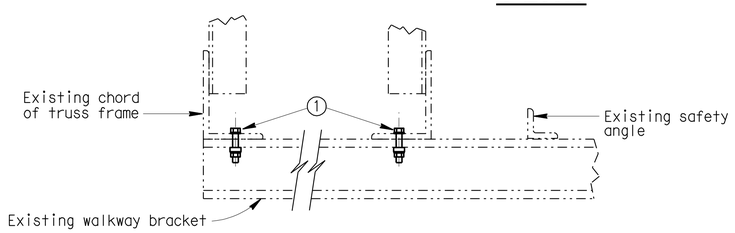

BOLT REPLACEMENT AND SAFETY ANGLE DETAIL

(1) Remove existing ⅜" Ø bolts in both end bays and replace with ⅜" Ø SAE J429-Grade 8 bolts, (Each end bay), ASTM A563 Grade DH or DH3 or ASTM A194 grade 2H nut, mechanical galvanize nut and bolt per ASTM B695. Reuse washer, beveled washer, and lock washer if in good condition. Otherwise replace with galvanized washer, beveled washer and lock washer.

LEGEND

Existing structure

New construction

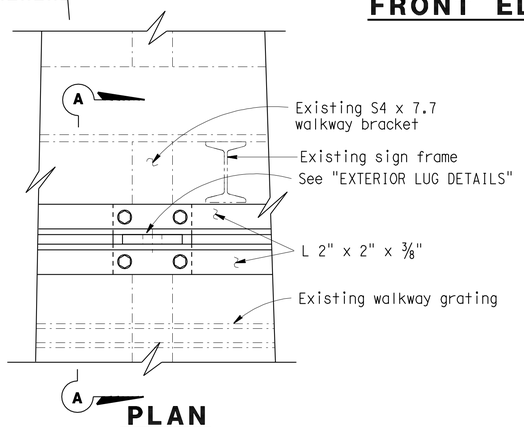

PLAN

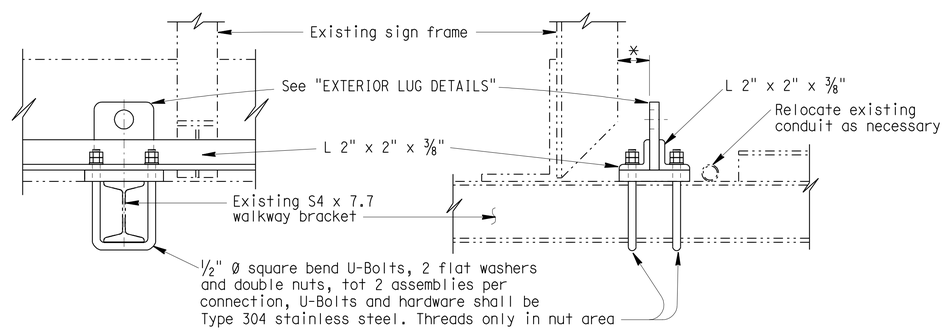

ELEVATION

SECTION A-A

EXTERIOR SAFETY CABLE LUG ANCHORAGE DETAILS

* Minimum of 2" clear from sign face or sign frame

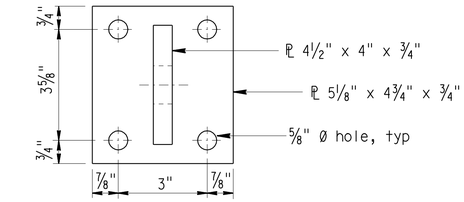

PLAN

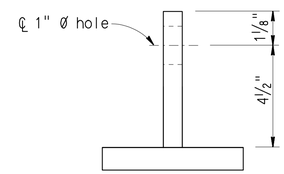

FRONT ELEVATION

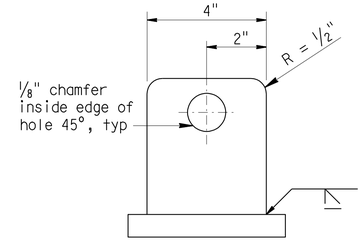

SIDE ELEVATION

EXTERIOR LUG DETAILS

NOTES:

1. Safety cable not shown in all views for clarity.
2. Unless otherwise shown all steel shall be galvanized after fabrication.
3. For sign locations, see PAVEMENT DELINEATION AND SIGN PLANS".

SAFETY CABLE RETROFIT LOCATION		
OVERHEAD SIGN NUMBER	EXISTING STATION	EXISTING POSTMILE
BS-40	"A1"179+98	R11.0
BS-41/42	"A1"195+00	R11.2
AS-245/246	"A1"239+16	M0.4
AS-247	"A1"278+28	M1.1
AS-250	"A1"304+68	M1.6
AS-251	"A1"320+00	M1.9
AS-252	"A1"320+00	M1.9
AS-253	"A1"333+27	M2.1
AS-401	"A1"375+22	M2.9
AS-115	"A1"341+41	M2.3
AS-402	"A1"384+48	M3.1
AS-415	"A1"393+47	M3.3
AS-417	"A1"432+99	M4.0
AS-414	"A1"465+78	M4.7
AS-143	"A1"470+30	M4.7
AS-146	"A1"495+03	M5.2
AS-149	"A1"531+26	M5.9
AS-152	"A1"556+68	M6.4
AS-155	"A1"610+28	M7.4
AS-158	"A1"634+16	M7.9
AS-161	"A1"665+75	M8.4
AS-212	"A1"677+32	M8.7
AS-213	"A1"679+47	M8.7
AS-214	"A3"689+44	M8.9
AS-553	"A2"734+14	M9.6

No Scale

NOTE:
THE CONTRACTOR SHALL VERIFY ALL CONTROLLING FIELD DIMENSIONS BEFORE ORDERING OR FABRICATING ANY MATERIAL.

BRANCH CHIEF Jeffrey B Woody

	BY	CHECKED
DESIGN	A GUTIERREZ	S VU
DETAILS	D W JUSTICE Jr	A GUTIERREZ
QUANTITIES	A GUTIERREZ	S VU

STATE OF CALIFORNIA
DEPARTMENT OF TRANSPORTATION

DIVISION OF ENGINEERING SERVICES
DESIGN AND TECHNICAL SERVICES
SPECIAL DESIGNS BRANCH A

BRIDGE NO. N/A
POST MILE –

SIGN DETAILS
OVERHEAD SIGN SAFETY CABLE RETROFIT DETAILS NO. 1

SDS-31

(ENGLISH) SPECIAL DESIGNS BRANCH BORDER SHEET (REV. 7-1-09)

ORIGINAL SCALE IN INCHES FOR REDUCED PLANS 0 1 2 3

CU 03
EA 379701

DISREGARD PRINTS BEARING EARLIER REVISION DATES 5-28-10 6-14-10

REVISION DATES | SHEET | OF

FILE => spec_des_br_prj/2009sd/03-379701/sds31-retrodetails1.dgn

USERNAME => trmikes1 DATE PLOTTED => 03-FEB-2011 TIME PLOTTED => 09:03

DIST	COUNTY	ROUTE	POST MILES TOTAL PROJECT	SHEET No	TOTAL SHEETS
03	Yol,Sac	80	R10.9/R11.7, M0.0/M10.4	544	1012

REGISTERED CIVIL ENGINEER 6/10/10 DATE

9-7-10
PLANS APPROVAL DATE

REGISTERED PROFESSIONAL ENGINEER ANDREW BUI No. C63560 Exp. 9/30/10 CIVIL STATE OF CALIFORNIA

The State of California or its officers or agents shall not be responsible for the accuracy or completeness of electronic copies of this plan sheet.

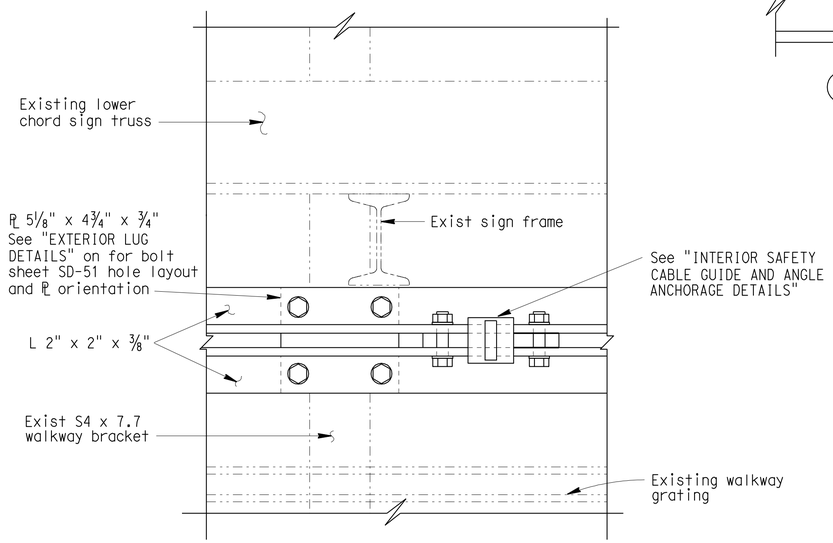

PLAN

Note: Interior cable guide spacing to be max. 5'-6" C-C.

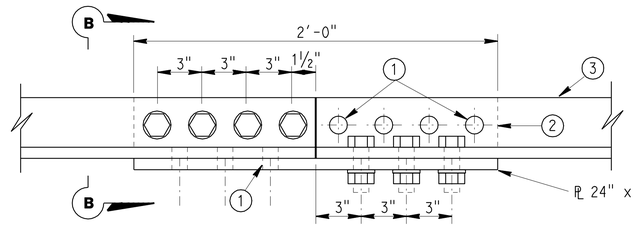

ELEVATION

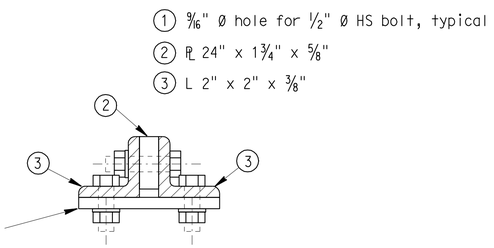

SECTION B-B

ANGLE SPLICE DETAILS

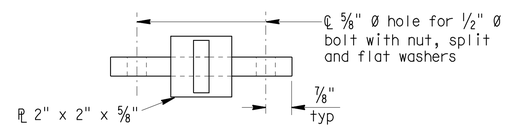

PLAN

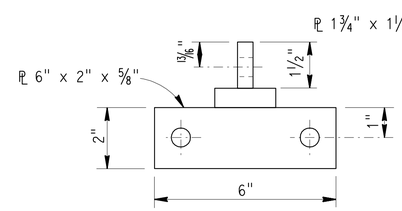

ELEVATION

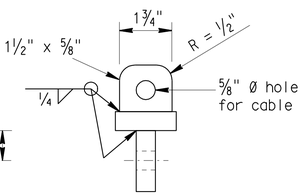

SIDE ELEVATION

INTERIOR CABLE GUIDE DETAILS

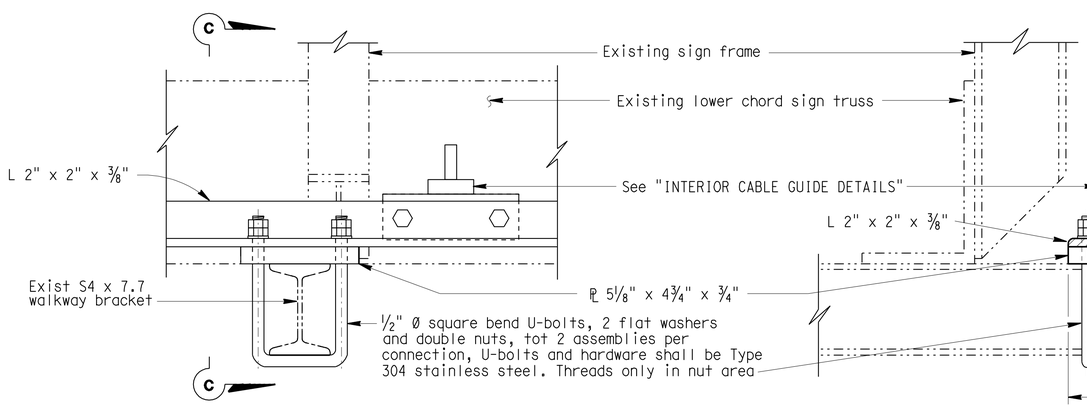

ELEVATION

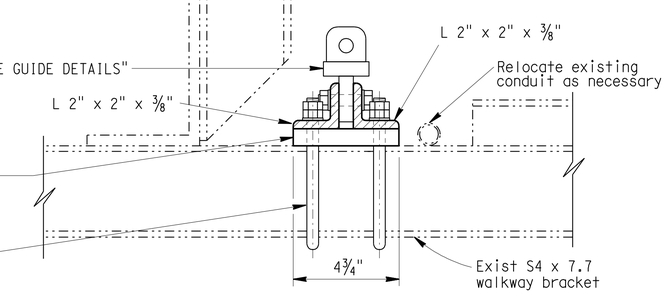

SECTION C-C

INTERIOR SAFETY CABLE GUIDE AND ANGLE ANCHORAGE DETAILS

NOTES:

1. Stainless steel cable shall be plain with 7 x 19 Class strand core construction using 7 x 19 Class strand core construction using Type 302 or 304 alloy stainless steel strands. Minimum cable breaking strength shall be 10,000 pounds. Cable shall be free of kinks, knots, or deformation and shall be continuous between end lugs, Splices not allowed. Safety cable shall not be prestretched.
2. Shackle shall be galvanized steel with working load limit of 10,000 pounds.
3. Place an equal amount of washers on each side to align cable with end lug without restricting shackle bolt rotation or contacting cable.
4. Prior to tightening cable clips at exterior anchorage, slack in cable shall be removed by the full effort of a typical construction worker.

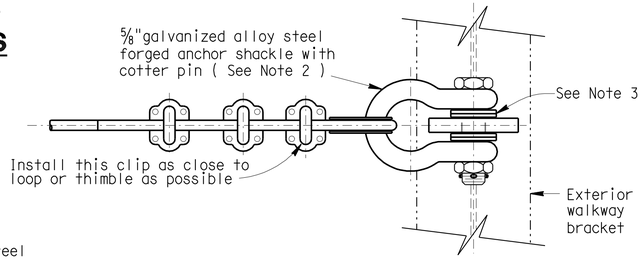

PLAN

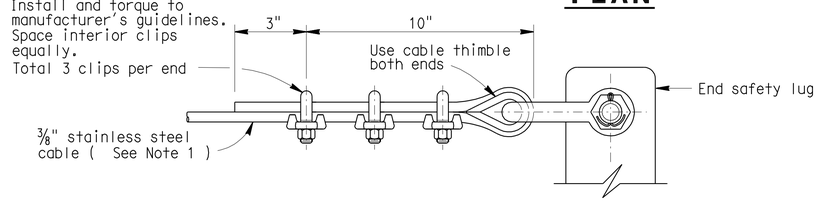

ELEVATION

END VIEW SAFETY CABLE

No Scale

NOTE:
THE CONTRACTOR SHALL VERIFY ALL CONTROLLING FIELD DIMENSIONS BEFORE ORDERING OR FABRICATING ANY MATERIAL.

STANDARD PLAN SHEET NO.
DETAIL NO.

BRANCH CHIEF Jeffrey B Woody

	BY	CHECKED
DESIGN	A GUTIERREZ	S VU
DETAILS	D W JUSTICE Jr	A GUTIERREZ
QUANTITIES	A GUTIERREZ	S VU

STATE OF CALIFORNIA
DEPARTMENT OF TRANSPORTATION

DIVISION OF ENGINEERING SERVICES
DESIGN AND TECHNICAL SERVICES
SPECIAL DESIGNS BRANCH A

BRIDGE NO. N/A
POST MILE –

SIGN DETAILS
OVERHEAD SIGN SAFETY CABLE RETROFIT DETAILS NO. 2

SDS-32

(ENGLISH) SPECIAL DESIGNS BRANCH BORDER SHEET (REV. 7-1-09)

ORIGINAL SCALE IN INCHES FOR REDUCED PLANS 0 1 2 3

CU 03
EA 379701

DISREGARD PRINTS BEARING EARLIER REVISION DATES 5-25-10 6-14-10

REVISION DATES

SHEET OF

FILE => spec_des_br_prj/2009sd/03-379701/sds32-retrodetails2.dgn

USERNAME => trmikesl DATE PLOTTED => 03-FEB-2011 TIME PLOTTED => 03:03

Dist	COUNTY	ROUTE	POST MILES TOTAL PROJECT	SHEET No.	TOTAL SHEETS
03	Yol,Sac	80	R10.9/R11.7, M0.0/M10.4	545	1012

REGISTERED CIVIL ENGINEER — DATE 6-14-10

9-7-10
PLANS APPROVAL DATE

REGISTERED PROFESSIONAL ENGINEER A.C. Murphy No. 47645 Exp. 12-31-11 CIVIL STATE OF CALIFORNIA

THE STATE OF CALIFORNIA OR ITS OFFICERS OR AGENTS SHALL NOT BE RESPONSIBLE FOR THE ACCURACY OR COMPLETENESS OF ELECTRONIC COPIES OF THIS PLAN SHEET.

OVERHEAD SIGN QUANTITIES

SIGN NUMBER	SHEET NUMBER	FURNISH SIGN STRUCTURE (TRUSS)	INSTALL SIGN STRUCTURE (TRUSS)	FURNISH SIGN STRUCTURE (LIGHTWEIGHT)	INSTALL SIGN STRUCTURE (LIGHTWEIGHT)	30" CIDH CONCRETE PILE (SIGN FOUNDATION)	36" CIDH CONCRETE PILE (SIGN FOUNDATION)	54" CIDH CONCRETE PILE (SIGN FOUNDATION)	60" CIDH CONCRETE PILE (SIGN FOUNDATION)	FURNISH SIGN STRUCTURE (BRIDGE MOUNTED WITH WALKWAY)	INSTALL SIGN STRUCTURE (BRIDGE MOUNTED WITH WALKWAY)	MODIFY SIGN STRUCTURE (SAFETY CABLE RETROFIT)	RELOCATE SIGN STRUCTURE	REMOVE SIGN STRUCTURE	REMOVE BRIDGE MOUNTED SIGN	INSTALL SIGN PANEL ON EXISTING FRAME			MOUNTING BEAMS (SEE NOTE 2)
		LB	LB	LB	LB	LF	LF	LF	LF	LB	LB	EA	EA	EA	EA	PANEL TYPE	PANEL SIZE	PANEL AREA SQFT	NUMBER
Temp-1	SC-153	21,647	21,647						25										
AS-115	PD-11	612										1				FORMED FORMED	144" X 110" 192" X 110'	110 147	
AS-136 (Exist)	PD-12														1				
AS-136	PD-12									3,449	3,449								
AS-137 (Exist)	PD-12														1				
AS-137	PD-12									3,841	3,841								
AS-143	PD-20	448										1				FORMED	264" X 70"	129	
AS-144 (Exist)	PD-21														1				
AS-144	PD-21									2,396	2,396								
AS-145 (Exist)	PD-21														1				
AS-145	PD-21									2,396	2,396								
AS-146	PD-22	383										1				FORMED	264" X 70"	129	
AS-149	PD-25	427										1				FORMED	240" X 70"	117	
AS-150 (Exist)	PD-26														1				
AS-150	PD-26									3,028	3,028								
AS-151 (Exist)	PD-26														1				
AS-151	PD-26									2,918	2,918								
AS-152	PD-27	448										1				FORMED	240" X 70"	117	
AS-155	PD-31	448										1				FORMED	312" X 70"	152	
AS-156 (Exist)	PD-32														1				
AS-156	PD-32									2,320	2,320								
AS-157 (Exist)	PD-32														1				
AS-157	PD-32									2,374	2,374								
SHEET TOTAL		24,413	21,647	0	0	0	0	0	25	22,722	22,722	6	0	0	8	———	———	901	———

NOTES:

1. OVERHEAD SIGN PANELS SHALL BE LAMINATED PANELS - TYPE A, UNLESS OTHERWISE SHOWN.
2. (N) - NOT A SEPARATE PAY ITEM. FOR INFORMATION ONLY. MOUNTING BEAMS SHOWN DO NOT INCLUDE MOUNTING BEAMS REQUIRED FOR NEW OVERHEAD SIGN STRUCTURES.
3. CMS = CHANGEABLE MESSAGE SIGN.
4. SEE ELECTRICAL PLANS FOR CHANGEABLE MESSAGE SIGN.

SIGN QUANTITIES

SQ-1

STATE OF CALIFORNIA - DEPARTMENT OF TRANSPORTATION
Caltrans
TRAFFIC

FUNCTIONAL SUPERVISOR: JOSEPH W. HORTON
CALCULATED-DESIGNED BY: JACK KEMMERLY
CHECKED BY: AC MURPHY
REVISED BY
DATE REVISED

LAST REVISION 3-29-10
DATE PLOTTED => 03-FEB-2011
TIME PLOTTED => 13:17

Dist	COUNTY	ROUTE	POST MILES TOTAL PROJECT	SHEET No.	TOTAL SHEETS
03	Yol,Sac	80	R10.9/R11.7, M0.0/M10.4	546	1012

REGISTERED CIVIL ENGINEER 6-14-10 DATE

9-7-10
PLANS APPROVAL DATE

REGISTERED PROFESSIONAL ENGINEER A.C. Murphy No. 47645 Exp. 12-31-11 CIVIL STATE OF CALIFORNIA

THE STATE OF CALIFORNIA OR ITS OFFICERS OR AGENTS SHALL NOT BE RESPONSIBLE FOR THE ACCURACY OR COMPLETENESS OF ELECTRONIC COPIES OF THIS PLAN SHEET.

OVERHEAD SIGN QUANTITIES (CONTINUED)

SIGN NUMBER	SHEET NUMBER	FURNISH SIGN STRUCTURE (TRUSS)	INSTALL SIGN STRUCTURE (TRUSS)	FURNISH SIGN STRUCTURE (LIGHTWEIGHT)	INSTALL SIGN STRUCTURE (LIGHTWEIGHT)	30" CIDH CONCRETE PILE (SIGN FOUNDATION)	36" CIDH CONCRETE PILE (SIGN FOUNDATION)	54" CIDH CONCRETE PILE (SIGN FOUNDATION)	60" CIDH CONCRETE PILE (SIGN FOUNDATION)	FURNISH SIGN STRUCTURE (BRIDGE MOUNTED WITH WALKWAY)	INSTALL SIGN STRUCTURE (BRIDGE MOUNTED WITH WALKWAY)	MODIFY SIGN STRUCTURE (SAFETY CABLE RETROFIT)	RELOCATE SIGN STRUCTURE	REMOVE SIGN STRUCTURE	REMOVE BRIDGE MOUNTED SIGN	INSTALL SIGN PANEL ON EXISTING FRAME			MOUNTING BEAMS (SEE NOTE 2)
																PANEL TYPE	PANEL SIZE	PANEL AREA SQFT	NUMBER
		LB	LB	LB	LB	LF	LF	LF	LF	LB	LB	EA	EA	EA	EA				
AS-158	PD-33	448										1				FORMED	312" X 70"	152	
AS-159 (Exist)	PD-34													1					
AS-159	PD-34	9,475	9,475					19											
AS-160 (Exist)	PD-34													1					
AS-160	PD-34	9,928	9,928					19											
AS-161	PD-35	448										1				FORMED	216" X 70"	105	
AS-212	PD-36	448										1				FORMED	264" X 100"	184	
AS-213	PD-36	404										1				LAMINATED	240" X 70"	117	3
AS-214	PD-37	373										1				FORMED	216" X 70"	105	
AS-215 (Exist)	PD-39														1				
AS-215 (Lt)	PD-39									3,477	3,477								
AS-215 (Rt)	PD-39									3,285	3,285								
AS-216 (Exist)	PD-39														1				
AS-216	PD-39									3,343	3,343								
AS-220 (Exist)	PD-38													1					
AS-220	PD-38	14,608	14,608						22										
AS-245	PD-3	288										1				FORMED	240" X 90"	150	
AS-246	PD-3	288										1				FORMED	240" X 90"	150	
AS-247	PD-6	448										1				FORMED	288" X 70"	140	
AS-248 (Exist)	PD-7														1				
AS-248	PD-7									4,314	4,314								
AS-249 (Exist)	PD-7														1				
AS-249	PD-7									3,475	3,475								
AS-250 (Exist)	PD-8													1					
AS-250	PD-8	15,306	15,306						22										
SHEET TOTAL		52,462	49,317	0	0	0	0	38	44	17,894	17,894	8	0	4	4	———	———	1,103	———

SIGN QUANTITIES

SQ-2

STATE OF CALIFORNIA - DEPARTMENT OF TRANSPORTATION
Caltrans
TRAFFIC

FUNCTIONAL SUPERVISOR: JOSEPH W. HORTON
CALCULATED-DESIGNED BY: JACK KEMMERLY
CHECKED BY: AC MURPHY
REVISED BY
DATE REVISED

LAST REVISION 3-11-10
DATE PLOTTED => 03-FEB-2011
TIME PLOTTED => 13:17

Dist	COUNTY	ROUTE	POST MILES TOTAL PROJECT	SHEET No.	TOTAL SHEETS
03	Yol,Sac	80	R10.9/R11.7, M0.0/M10.4	547	1012

REGISTERED CIVIL ENGINEER — DATE 6-14-10

9-7-10
PLANS APPROVAL DATE

REGISTERED PROFESSIONAL ENGINEER — A.C. Murphy No. 47645 Exp. 12-31-11 CIVIL — STATE OF CALIFORNIA

THE STATE OF CALIFORNIA OR ITS OFFICERS OR AGENTS SHALL NOT BE RESPONSIBLE FOR THE ACCURACY OR COMPLETENESS OF ELECTRONIC COPIES OF THIS PLAN SHEET.

OVERHEAD SIGN QUANTITIES (CONTINUED)

SIGN NUMBER	SHEET NUMBER	FURNISH SIGN STRUCTURE (TRUSS)	INSTALL SIGN STRUCTURE (TRUSS)	FURNISH SIGN STRUCTURE (LIGHTWEIGHT)	INSTALL SIGN STRUCTURE (LIGHTWEIGHT)	30" CIDH CONCRETE PILE (SIGN FOUNDATION)	36" CIDH CONCRETE PILE (SIGN FOUNDATION)	54" CIDH CONCRETE PILE (SIGN FOUNDATION)	60" CIDH CONCRETE PILE (SIGN FOUNDATION)	FURNISH SIGN STRUCTURE (BRIDGE MOUNTED WITH WALKWAY)	INSTALL SIGN STRUCTURE (BRIDGE MOUNTED WITH WALKWAY)	MODIFY SIGN STRUCTURE (SAFETY CABLE RETROFIT)	RELOCATE SIGN STRUCTURE	REMOVE SIGN STRUCTURE	REMOVE BRIDGE MOUNTED SIGN	INSTALL SIGN PANEL ON EXISTING FRAME			MOUNTING BEAMS (SEE NOTE 2)
		LB	LB	LB	LB	LF	LF	LF	LF	LB	LB	EA	EA	EA	EA	PANEL TYPE	PANEL SIZE	PANEL AREA SQFT	NUMBER
AS-251 (Exist) AS-252 (Exist)	PD-9													1					
AS-251 AS-252	SC-94	13,114	13,114					22											
	PD-9															LAMINATED	252" X 120"	210	
AS-253 (Exist)	PD-10													1					
AS-253	PD-10	38,201	38,201						56										
AS-401 (Exist)	PD-13													1					
AS-401	PD-13	60,836	60,836						59										
AS-402	PD-14	592										1				LAMINATED	300" X 70"	146	1
AS-411 (Exist)	PD-15													1					
AS-411	PD-15	16,379	16,379						22										
AS-413 (Exist)	PD-17													1					
AS-413	PD-17	16,271	16,271						22										
AS-414	PD-20	583										1				LAMINATED	300" X 70"	146	1
AS-415 (Exist)	PD-15													1					
AS-415	PD-15	54,744	54,744						59										
AS-417	PD-17	592										1				LAMINATED	300" X 70"	146	1
AS-553 (Exist)	PD-40													1					
AS-553	PD-40	21,708	21,708						25										
AS-605	PD-16									3,038	3,038								
AS-606	PD-16									3,265	3,265								
AS-607	PD-36									1,840	1,840								
AS-608	PD-43									3,453	3,453								
AS-610	SC-155	22,097	22,097						25										
	PD-38															LAMINATED	240" X 100"	167	
AS-623	PD-37	10,026	10,026					21											
AS-624	PD-40								25				1						
SHEET TOTAL		255,143	253,376	0	0	0	0	43	293	11,596	11,596	3	1	7	0	———	———	815	———

SIGN QUANTITIES

SQ-3

STATE OF CALIFORNIA - DEPARTMENT OF TRANSPORTATION
Caltrans
TRAFFIC

FUNCTIONAL SUPERVISOR: JOSEPH W. HORTON
CALCULATED-DESIGNED BY: JACK KEMMERLY
CHECKED BY: AC MURPHY
REVISED BY
DATE REVISED

LAST REVISION 3-30-10
DATE PLOTTED =>
TIME PLOTTED => 13:17

Dist	COUNTY	ROUTE	POST MILES TOTAL PROJECT	SHEET No.	TOTAL SHEETS
03	Yol,Sac	80	R10.9/R11.7, M0.0/M10.4	548	1012

REGISTERED CIVIL ENGINEER — DATE 7-29-10

9-7-10
PLANS APPROVAL DATE

REGISTERED PROFESSIONAL ENGINEER A.C. Murphy No. 47645 Exp. 12-31-11 CIVIL STATE OF CALIFORNIA

THE STATE OF CALIFORNIA OR ITS OFFICERS OR AGENTS SHALL NOT BE RESPONSIBLE FOR THE ACCURACY OR COMPLETENESS OF ELECTRONIC COPIES OF THIS PLAN SHEET.

OVERHEAD SIGN QUANTITIES (CONTINUED)

SIGN NUMBER	SHEET NUMBER	FURNISH SIGN STRUCTURE (TRUSS)	INSTALL SIGN STRUCTURE (TRUSS)	FURNISH SIGN STRUCTURE (LIGHTWEIGHT)	INSTALL SIGN STRUCTURE (LIGHTWEIGHT)	30" CIDH CONCRETE PILE (SIGN FOUNDATION)	36" CIDH CONCRETE PILE (SIGN FOUNDATION)	54" CIDH CONCRETE PILE (SIGN FOUNDATION)	60" CIDH CONCRETE PILE (SIGN FOUNDATION)	FURNISH SIGN STRUCTURE (BRIDGE MOUNTED WITH WALKWAY)	INSTALL SIGN STRUCTURE (BRIDGE MOUNTED WITH WALKWAY)	MODIFY SIGN STRUCTURE (SAFETY CABLE RETROFIT)	RELOCATE SIGN STRUCTURE	REMOVE SIGN STRUCTURE	REMOVE BRIDGE MOUNTED SIGN	INSTALL SIGN PANEL ON EXISTING FRAME			MOUNTING BEAMS (SEE NOTE 2)
																PANEL TYPE	PANEL SIZE	PANEL AREA SQFT	NUMBER
		LB	LB	LB	LB	LF	LF	LF	LF	LB	LB	EA	EA	EA	EA				
AS-625	PD-32	12,599	12,599					19											
AS-626	PD-29	11,668	11,668					19											
AS-627	PD-26	12,328	12,328					19											
AS-628	PD-23	18,322	18,322						23										
AS-629	PD-23	11,571	11,571					19											
AS-630	PD-21			1,857	1,857	11													
AS-631	PD-21			2,381	2,381		13												
AS-632	PD-9	37,381	37,381						56										
AS-633	PD-11	18,637	18,637						23										
AS-634	PD-32			1,865	1,865	11													
AS-636	PD-32			2,313	2,313		13												
AS-637	PD-26			1,861	1,861	11													
AS-639	PD-26			1,903	1,903	11													
AS-641	PD-32	12,197	12,197					19											
AS-642	PD-26	12,301	12,301					19											
AS-643	PD-44	19,852	19,852						23										
AS-644	PD-44	11,590	11,590					19											
AS-645	PD-24	17,840	17,840						23										
ASN-12	PD-16														1				
ASN-13	PD-16														1				
BS-40	PD-1	383										1				FORMED	240" X 70"	117	
BS-41	PD-2	288										1				FORMED	240" X 110"	184	
BS-42	PD-2	962										1				FORMED	240" X 110"	184	
SHEET TOTAL		197,919	196,286	12,180	12,180	44	26	133	148	0	0	3	0	0	2	—	—	485	—
SQ-1 SHEET TOTAL		24,413	21,647	0	0	0	0	0	25	22,722	22,722	6	0	0	8	—	—	901	—
SQ-2 SHEET TOTAL		52,462	49,317	0	0	0	0	38	44	17,894	17,894	8	0	4	4	—	—	1,103	—
SQ-3 SHEET TOTAL		255,143	253,376	0	0	0	0	43	293	11,596	11,596	3	1	7	0	—	—	815	—
CMS (SEE NOTE)		14,275	14,275	0	0	0	0	0	29	0	0	0	0	1	0	—	—	0	—
TOTAL		544,212	534,901	12,180	12,180	44	26	214	539	52,212	52,212	20	1	12	14	—	—	3,304	—

NOTE: THE EXISTING CMS LOCATED AT STATION "A1"308+58± FEBT IS TO BE REMOVED.
FOR ADDITIONAL CMS INFORMATION, SEE ELECTRICAL PLANS.

SIGN QUANTITIES

SQ-4

STATE OF CALIFORNIA - DEPARTMENT OF TRANSPORTATION
Caltrans
TRAFFIC

FUNCTIONAL SUPERVISOR: JOSEPH W. HORTON
CALCULATED-DESIGNED BY: JACK KEMMERLY
CHECKED BY: AC MURPHY
REVISED BY
DATE REVISED

LAST REVISION 7-29-10
DATE PLOTTED => 03-FEB-2011
TIME PLOTTED => 13:17

Dist	COUNTY	ROUTE	POST MILES TOTAL PROJECT	SHEET No.	TOTAL SHEETS
03	Yol,Sac	80	R10.9/R11.7, M0.0/M10.4	549	1012

REGISTERED CIVIL ENGINEER — DATE 6-14-10

9-7-10
PLANS APPROVAL DATE

REGISTERED PROFESSIONAL ENGINEER — A.C. Murphy No. 47645 Exp. 12-31-11 CIVIL — STATE OF CALIFORNIA

THE STATE OF CALIFORNIA OR ITS OFFICERS OR AGENTS SHALL NOT BE RESPONSIBLE FOR THE ACCURACY OR COMPLETENESS OF ELECTRONIC COPIES OF THIS PLAN SHEET.

ROADSIDE SIGN QUANTITIES

SIGN NUMBER (Sht-No.)	SIGN CODE FEDERAL	SIGN CODE CALIFORNIA	PANEL SIZE (INCHES)	"C" DIM IN FEET	POST SIZE AND LENGTH 4" X 4"	4" X 6"	6" X 6"	6" X 8"	TYPE L L+	TYPE L R+	ROADSIDE SIGN ONE POST (EACH)	ROADSIDE SIGN TWO POST (EACH)	INSTALL SIGN (SSBM) (EACH)	ROADSIDE SIGN (BARRIER MOUNTED) (EACH)	INSTALL SIGN PANEL (MAHM) (EACH)	INSTALL ROADSIDE SIGN (LWBP) (EACH)	REMOVE ROADSIDE SIGN (EACH)	REMOVE ROADSIDE SIGN (SSBM) (EACH)	RELOCATE ROADSIDE SIGN (EACH)	RELOCATE ROADSIDE SIGN (BARRIER MOUNTED) (EACH)	RESET ROADSIDE SIGN (EACH)	REMARKS
3-1		R82-1 R82B	36 X 66 36 X 24	5			18′				1											
4-1	W8-5	W42 W42A															1					
4-2	W8-5	W42	48 X 48	7			18′				1											
4-3	W8-5	W42 W42A															1					
4-4		G86 G86	96 X 60 96 X 24	6				20′				1										
4-5		G86 G86															1					
4-6		G9-5															1					
4-7		G9-5	90 X 42	7		16′						1										
4-8		R93-2	36 X 84	7										1								TYPE D
4-9	W8-5	W42	48 X 48	7										1								TYPE H
4-10		S32 S32-1																			1	
4-11		SR50-2 R93A	36 X 78 36 X 15	6										1								TYPE F
5-1		SPEC															1					
5-2	W4-2R	W11(R+)	48 X 48	7			18′				1											
5-3		SPEC															1					
5-4		G86															1					
5-5		G86	108 X 60	7				18′				1										
5-6		R86-3	36 X 66	7										1								TYPE E
5-7		SG42															1					
SHEET TOTAL											3	3	0	4	0	0	8	0	0	0	1	————

NOTES:

1. EXACT LOCATION AND POSITION OF ROADSIDE SIGNS TO BE DETERMINED BY THE ENGINEER.
2. POST LENGTHS GIVEN ARE APPROXIMATE.
3. "C" DIM = VERTICAL CLEARANCE EP TO BOTTOM OF SIGN PANEL.
4. SIGN PANEL TO BE MOUNTED ON LUMINAIRE.
5. SIGN PANEL TO BE MOUNTED ON RAMP METERING TYPE 1 SIGNAL STANDARD BELOW THE LOWER SIGNAL HEAD. "2 CARS PER GREEN".
6. SIGN PANEL TO BE MOUNTED ON SIGNAL STANDARD.
7. MAHM = MAST-ARM HANGER METHOD. SEE STANDRAD PLAN ES-7N.
8. LWBP = LAMINATED WOOD BOX POST.
9. FOR ADDITIONAL ROADSIDE SIGN (BARRIER MOUNTED) INFORMATION, SEE SHEETS SD-4 THRU SD-6.

SIGN QUANTITIES

SQ-5

REVISED BY | DATE REVISED
JACK KEMMERLY | AC MURPHY
CALCULATED-DESIGNED BY | CHECKED BY
FUNCTIONAL SUPERVISOR | JOSEPH W. HORTON
STATE OF CALIFORNIA - DEPARTMENT OF TRANSPORTATION
Caltrans
TRAFFIC

LAST REVISION 3-8-10
DATE PLOTTED => 03-FEB-2011
TIME PLOTTED => 13:18

Dist	COUNTY	ROUTE	POST MILES TOTAL PROJECT	SHEET No.	TOTAL SHEETS
03	Yol,Sac	80	R10.9/R11.7, M0.0/M10.4	550	1012

REGISTERED CIVIL ENGINEER — DATE 6-14-10

9-7-10
PLANS APPROVAL DATE

REGISTERED PROFESSIONAL ENGINEER A.C. Murphy No. 47645 Exp. 12-31-11 CIVIL STATE OF CALIFORNIA

THE STATE OF CALIFORNIA OR ITS OFFICERS OR AGENTS SHALL NOT BE RESPONSIBLE FOR THE ACCURACY OR COMPLETENESS OF ELECTRONIC COPIES OF THIS PLAN SHEET.

ROADSIDE SIGN QUANTITIES (CONTINUED)

SIGN NUMBER (Sht-No.)	SIGN CODE FEDERAL	SIGN CODE CALIFORNIA	PANEL SIZE (INCHES)	"C" DIM IN FEET	POST SIZE AND LENGTH 4" X 4"	4" X 6"	6" X 6"	6" X 8"	TYPE L L+	TYPE L R+	ROADSIDE SIGN ONE POST (EACH)	ROADSIDE SIGN TWO POST (EACH)	INSTALL SIGN (SSBM) (EACH)	ROADSIDE SIGN (BARRIER MOUNTED) (EACH)	INSTALL SIGN PANEL (MAHM) (EACH)	INSTALL ROADSIDE SIGN (LWBP) (EACH)	REMOVE ROADSIDE SIGN (EACH)	REMOVE ROADSIDE SIGN (SSBM) (EACH)	RELOCATE ROADSIDE SIGN (EACH)	RELOCATE ROADSIDE SIGN (BARRIER MOUNTED) (EACH)	RESET ROADSIDE SIGN (EACH)	REMARKS
5-8		SG42	78 X 96	7				22′				1										
5-9		R93-2	36 X 84	7										1								TYPE D
5-10	W9-1R		48 X 48	7			18′				1											
6-1		R84-1	48 X 72	7										1								TYPE G
6-2		G50 G27-2(80)																1 1				
6-3		G50 G27-2(80)	30 X 15 36 X 36	6									1 1									SEE NOTE 4 SEE NOTE 4
6-4	W4-1R	W59(R+)															1					
6-5		R89(2)	36 X 9										1									SEE NOTE 5
6-6	W4-1R	W59(R+)	48 X 48	7			18′				1											
6-7		G84															1					
6-8		G84-2	54 X 48	7			16′				1											"EXIT 85"
7-1	W4-1R	W59(R+)															1					
7-2	W4-1R	W59(R+)	48 X 48	7			18′				1											
7-3	W4-1R	W59(R+)	48 X 48	7			18′				1											
7-4	W4-1R	W59(R+)															1					
7-5		R86-3	36 X 66	7										1								TYPE E
7-6		R89(2)	36 X 9										1									SEE NOTE 5
7-7		R89(2)	36 X 9										1									SEE NOTE 5
7-8		R89(2)	36 X 9										1									SEE NOTE 5
7-9	W4-1R	W59(R+)	48 X 48	7			18′				1											
8-1		R93-2	36 X 84	7										1								TYPE D
8-2		G49 G27-2(80)																1 1				
8-3		G49 G27-2(80)	30 X 15 36 X 36	6									1 1									SEE NOTE 4 SEE NOTE 4
8-4		R84-2																		1		
8-5		G84															1					
8-6		G84-2	54 X 48	7			16′				1											"EXIT 85"
SHEET TOTAL											7	1	8	4	0	0	5	4	0	1	0	————

SIGN QUANTITIES

SQ-6

STATE OF CALIFORNIA - DEPARTMENT OF TRANSPORTATION
Caltrans
TRAFFIC

FUNCTIONAL SUPERVISOR: JOSEPH W. HORTON
CALCULATED-DESIGNED BY: JACK KEMMERLY
CHECKED BY: AC MURPHY
REVISED BY / DATE REVISED

LAST REVISION 3-29-10 | DATE PLOTTED => 03-FEB-2011 | TIME PLOTTED => 13:18

Dist	COUNTY	ROUTE	POST MILES TOTAL PROJECT	SHEET No.	TOTAL SHEETS
03	Yol,Sac	80	R10.9/R11.7, MO.0/M10.4	551	1012

REGISTERED CIVIL ENGINEER — DATE 6-14-10

9-7-10
PLANS APPROVAL DATE

REGISTERED PROFESSIONAL ENGINEER — A.C. Murphy — No. 47645 — Exp. 12-31-11 — CIVIL — STATE OF CALIFORNIA

THE STATE OF CALIFORNIA OR ITS OFFICERS OR AGENTS SHALL NOT BE RESPONSIBLE FOR THE ACCURACY OR COMPLETENESS OF ELECTRONIC COPIES OF THIS PLAN SHEET.

ROADSIDE SIGN QUANTITIES (CONTINUED)

SIGN NUMBER (Sht-No.)	SIGN CODE FEDERAL	SIGN CODE CALIFORNIA	PANEL SIZE (INCHES)	"C" DIM IN FEET	POST SIZE AND LENGTH 4" X 4"	4" X 6"	6" X 6"	6" X 8"	TYPE L Lt	TYPE L Rt	ROADSIDE SIGN ONE POST (EACH)	ROADSIDE SIGN TWO POST (EACH)	INSTALL SIGN (SSBM) (EACH)	ROADSIDE SIGN (BARRIER MOUNTED) (EACH)	INSTALL SIGN PANEL (MAHM) (EACH)	INSTALL ROADSIDE SIGN (LWBP) (EACH)	REMOVE ROADSIDE SIGN (EACH)	REMOVE ROADSIDE SIGN (SSBM) (EACH)	RELOCATE ROADSIDE SIGN (EACH)	RELOCATE ROADSIDE SIGN (BARRIER MOUNTED) (EACH)	RESET ROADSIDE SIGN (EACH)	REMARKS
9-1		G86															1					
9-2		G86	114 X 78	7				20′				1										
9-3		SG42															1					
9-4		SG42	78 X 96	7				22′				1										
10-1		SPEC	150 X 54	7				18′				1										
10-2		SPEC															1					
10-3	W8-4	W18	48 X 48	7			18′				1											
11-1		SR50-2 R93A	36 X 78 36 X 15	6										1								TYPE K
		SR50-2 R93A	36 X 78 36 X 15	6																		
11-2		G84-2	54 X 48	7			16′				1											"EXIT 86"
11-3		G84															1					
11-4		R86-3	36 X 66	7										1								TYPE J
		R86-3	36 X 66	7																		
11-5		W75(Lt)															1					
11-6		G50 G27-2(80)	30 X 15 36 X 36	6									1 1									SEE NOTE 4 SEE NOTE 4
11-7		G50 G27-2(80)																1 1				
11-8	W4-1R	W59(Rt)															1					
12-1	W4-1R	W59(Rt)	48 X 48	7			18′				1											
12-2	W4-1R	W59(Rt)															1					
12-3	W4-2R	W11(Rt)	48 X 48	7			18′				1											
12-4		R93-2	36 X 84	7										1								TYPE D
12-5	W4-1R	W59(Rt)	48 X 48	7			18′				1											
12-6		R93-2	36 X 84	7										1								TYPE D
12-7	W4-1R	W59(Rt)															1					
12-8	W4-1R	W59(Rt)	48 X 48	7			18′				1											
12-9	W9-1R		48 X 48	7			18′				1											
SHEET TOTAL											7	3	2	4	0	0	8	2	0	0	0	———

SIGN QUANTITIES

SQ-7

REVISED BY | DATE REVISED
JACK KEMMERLY | AC MURPHY
CALCULATED-DESIGNED BY | CHECKED BY
FUNCTIONAL SUPERVISOR: JOSEPH W. HORTON
STATE OF CALIFORNIA - DEPARTMENT OF TRANSPORTATION
Caltrans
TRAFFIC

LAST REVISION 3-29-10 | DATE PLOTTED => 03-FEB-2011 | TIME PLOTTED => 13:18

Dist	COUNTY	ROUTE	POST MILES TOTAL PROJECT	SHEET No.	TOTAL SHEETS
03	Yol,Sac	80	R10.9/R11.7, M0.0/M10.4	552	1012

REGISTERED CIVIL ENGINEER — DATE 6-14-10

9-7-10
PLANS APPROVAL DATE

REGISTERED PROFESSIONAL ENGINEER — A.C. Murphy — No. 47645 — Exp. 12-31-11 — CIVIL — STATE OF CALIFORNIA

THE STATE OF CALIFORNIA OR ITS OFFICERS OR AGENTS SHALL NOT BE RESPONSIBLE FOR THE ACCURACY OR COMPLETENESS OF ELECTRONIC COPIES OF THIS PLAN SHEET.

ROADSIDE SIGN QUANTITIES (CONTINUED)

SIGN NUMBER (Sht-No.)	SIGN CODE FEDERAL	SIGN CODE CALIFORNIA	PANEL SIZE (INCHES)	"C" DIM IN FEET	POST SIZE AND LENGTH 4" X 4"	4" X 6"	6" X 6"	6" X 8"	TYPE L L†	TYPE L R†	ROADSIDE SIGN ONE POST (EACH)	ROADSIDE SIGN TWO POST (EACH)	INSTALL SIGN (SSBM) (EACH)	ROADSIDE SIGN (BARRIER MOUNTED) (EACH)	INSTALL SIGN PANEL (MAHM) (EACH)	INSTALL ROADSIDE SIGN (LWBP) (EACH)	REMOVE ROADSIDE SIGN (EACH)	REMOVE ROADSIDE SIGN (SSBM) (EACH)	RELOCATE ROADSIDE SIGN (EACH)	RELOCATE ROADSIDE SIGN (BARRIER MOUNTED) (EACH)	RESET ROADSIDE SIGN (EACH)	REMARKS
14-1		G86															1					
14-2		G86	114 X 78	7				20′				1										
14-3		R86-3	36 X 66	7										1								TYPE J
		R86-3	36 X 66	7																		
14-4	W4-7L	W74(L†)	60 X 60	7		20′						1										
14-5	W4-7L	W74(L†)															1					
14-6	D9-11	G86 G66-12															1					
14-7	D9-11	G86 G66-12	144 X 54 30 X 30	6				20′				1										
15-1		G50 G27-2(80)																1 1				
15-2		G50 G27-2(80)	30 X 15 36 X 36	6									1 1									SEE NOTE 4 SEE NOTE 4
15-3		R93-2	36 X 84	7										1								TYPE I
		R93-2	36 X 84	7																		
15-4		W73															1					
15-5		W73(R†)	60 X 60	7		20′						1										
15-6		G84															1					
15-7		G84-2	54 X 48	7			16′				1											"EXIT 88"
15-8		SR14															1					
15-9		R48-2	48 X 60	7			18′				1											
16-1	W4-1R	W59(R†)															1					
16-2	W4-1R	W59(R†)	48 X 48	7			18′				1											
16-3	R4-3	R56	48 X 60	7									1									SEE NOTE 4
16-4	R3-1	R16	24 X 24	7	14′						1											
16-5		R16B															1					
16-6		R56															1					
16-7	W4-1R	W59(R†)	48 X 48	7			18′				1											
16-8	W4-1R	W59(R†)															1					
17-1		G84-2	54 X 48	7			16′				1											"EXIT 88"
17-2		G84															1					
SHEET TOTAL											6	4	3	2	0	0	11	2	0	0	0	———

SIGN QUANTITIES

SQ-8

STATE OF CALIFORNIA - DEPARTMENT OF TRANSPORTATION
Caltrans
TRAFFIC

FUNCTIONAL SUPERVISOR: JOSEPH W. HORTON
CALCULATED-DESIGNED BY: JACK KEMMERLY
CHECKED BY: AC MURPHY
REVISED BY / DATE REVISED

LAST REVISION 3-8-10
DATE PLOTTED => 03-FEB-2011
TIME PLOTTED => 13:18

Dist	COUNTY	ROUTE	POST MILES TOTAL PROJECT	SHEET No.	TOTAL SHEETS
03	Yol,Sac	80	R10.9/R11.7, MO.0/M10.4	553	1012

REGISTERED CIVIL ENGINEER 6-14-10 DATE

9-7-10
PLANS APPROVAL DATE

REGISTERED PROFESSIONAL ENGINEER A.C. Murphy No. 47645 Exp. 12-31-11 CIVIL STATE OF CALIFORNIA

THE STATE OF CALIFORNIA OR ITS OFFICERS OR AGENTS SHALL NOT BE RESPONSIBLE FOR THE ACCURACY OR COMPLETENESS OF ELECTRONIC COPIES OF THIS PLAN SHEET.

ROADSIDE SIGN QUANTITIES (CONTINUED)

SIGN NUMBER (Sht-No.)	SIGN CODE FEDERAL	SIGN CODE CALIFORNIA	PANEL SIZE (INCHES)	"C" DIM IN FEET	POST SIZE AND LENGTH 4" X 4"	4" X 6"	6" X 6"	6" X 8"	TYPE L Lt	TYPE L Rt	ROADSIDE SIGN ONE POST (EACH)	ROADSIDE SIGN TWO POST (EACH)	INSTALL SIGN (SSBM) (EACH)	ROADSIDE SIGN (BARRIER MOUNTED) (EACH)	INSTALL SIGN PANEL (MAHM) (EACH)	INSTALL ROADSIDE SIGN (LWBP) (EACH)	REMOVE ROADSIDE SIGN (EACH)	REMOVE ROADSIDE SIGN (SSBM) (EACH)	RELOCATE ROADSIDE SIGN (EACH)	RELOCATE ROADSIDE SIGN (BARRIER MOUNTED) (EACH)	RESET ROADSIDE SIGN (EACH)	REMARKS
17-3		R18A(Rt)	66 X 48	7		16′						1										
17-4		R18A(Rt)															1					
17-5		G49 G27-2(80)	30 X 15 36 X 36	6									1 1									SEE NOTE 4
17-6		G49 G27-2(80)																1 1				
17-7		R86-3	36 X 66	7										1								TYPE J
		R86-3	36 X 66	7																		
18-1		R93-2	36 X 84	7										1								TYPE I
		R93-2	36 X 84	7																		
18-2	W4-7L	W74(Lt)	60 X 60	7		20′						1										
18-3	W4-7L	W74(Lt)															1					
18-4		G86															1					
19-1		G86															1					
19-2		G86	144 X 54	7				18′				1										
19-3		R2-1(65)															1					
19-4		R6-1															1					
19-5	W4-7L	W74(Lt)															1					
19-6	W4-7L	W74(Lt)	60 X 60	7		20′						1										
20-1		R18A(Rt)															1					
20-2		R18A(Rt)	66 X 48	7		16′						1										
20-3		G84-2	54 X 48	7			16′				1											"EXIT 89"
20-4		G84															1					
20-5		R86-3	36 X 66	7										1								TYPE J
		R86-3	36 X 66	7																		
20-6		G50 G27-2(80)	30 X 15 36 X 36	6									1 1									SEE NOTE 4 SEE NOTE 4
20-7		G50 G27-2(80)																1 1				
20-8		R93-2	36 X 84	7										1								TYPE I
		R93-2	36 X 84	7																		
SHEET TOTAL											1	5	4	4	0	0	9	4	0	0	0	————

SIGN QUANTITIES

SQ-9

STATE OF CALIFORNIA - DEPARTMENT OF TRANSPORTATION
TRAFFIC
Caltrans

FUNCTIONAL SUPERVISOR: JOSEPH W. HORTON
CALCULATED-DESIGNED BY: JACK KEMMERLY
CHECKED BY: AC MURPHY
REVISED BY
DATE REVISED

LAST REVISION 3-8-10
DATE PLOTTED => 03-FEB-2011
TIME PLOTTED => 13:18

Dist	COUNTY	ROUTE	POST MILES TOTAL PROJECT	SHEET No.	TOTAL SHEETS
03	Yol,Sac	80	R10.9/R11.7, M0.0/M10.4	554	1012

REGISTERED CIVIL ENGINEER 6-14-10 DATE

9-7-10
PLANS APPROVAL DATE

REGISTERED PROFESSIONAL ENGINEER A.C. Murphy No. 47645 Exp. 12-31-11 CIVIL STATE OF CALIFORNIA

THE STATE OF CALIFORNIA OR ITS OFFICERS OR AGENTS SHALL NOT BE RESPONSIBLE FOR THE ACCURACY OR COMPLETENESS OF ELECTRONIC COPIES OF THIS PLAN SHEET.

ROADSIDE SIGN QUANTITIES (CONTINUED)

SIGN NUMBER (Sht-No.)	SIGN CODE FEDERAL	SIGN CODE CALIFORNIA	PANEL SIZE (INCHES)	"C" DIM IN FEET	POST SIZE AND LENGTH 4" X 4"	4" X 6"	6" X 6"	6" X 8"	TYPE L Lt	TYPE L Rt	ROADSIDE SIGN ONE POST (EACH)	ROADSIDE SIGN TWO POST (EACH)	INSTALL SIGN (SSBM) (EACH)	ROADSIDE SIGN (BARRIER MOUNTED) (EACH)	INSTALL SIGN PANEL (MAHM) (EACH)	INSTALL ROADSIDE SIGN (LWBP) (EACH)	REMOVE ROADSIDE SIGN (EACH)	REMOVE ROADSIDE SIGN (SSBM) (EACH)	RELOCATE ROADSIDE SIGN (EACH)	RELOCATE ROADSIDE SIGN (BARRIER MOUNTED) (EACH)	RESET ROADSIDE SIGN (EACH)	REMARKS
21-1	W4-1R	W59(Rt)															1					
21-2	W4-1R	W59(Rt)	48 X 48	7			18′				1											
21-3		R89(2)	36 X 9										1									SEE NOTE 5
21-4	W4-1R	W59(Rt)	48 X 48	7			18′				1											
21-5	W4-1R	W59(Rt)															1					
21-6		G77															1					
21-7		G78															1					
21-8	W8-5	W42															1					
21-9	W8-5	W42															1					
21-10	W4-1R	W59(Rt)	48 X 48	7			18′				1											
21-11	W4-1R	W59(Rt)															1					
21-12	W4-1R	W59(Rt)															1					
21-13		R89(2)	36 X 9										1									SEE NOTE 5
21-14	W4-1R	W59(Rt)	48 X 48	7			18′				1											
22-1		G84-2	54 X 48	7			16′				1											"EXIT 89"
22-2		G84															1					
22-3		G27-2(80)																1				
22-4		G49 G27-2(80)	30 X 15 36 X 36	 6									1 1									SEE NOTE 4 SEE NOTE 4
22-5		R18A(Rt)	66 X 48	7		16′						1										
23-1		SR50-2 R93A	36 X 78 36 X 15	 6										1								TYPE C
		SR50-2 R93A	36 X 78 36 X 15	 6																		
23-2	W4-7L	W74(Lt)	60 X 60	7		20′						1										
23-3	R2-1(65)	R2(65) R48-1	48 X 60 36 X 18	 5			18′				1											
24-1	W8-5	W42															1					
24-2		R86-3	36 X 66	7										1								TYPE B
		R86-3	36 X 66	7																		
24-3	W8-5	W42															1					
SHEET TOTAL											6	2	4	2	0	0	11	1	0	0	0	————

SIGN QUANTITIES

SQ-10

STATE OF CALIFORNIA - DEPARTMENT OF TRANSPORTATION
Caltrans
TRAFFIC

FUNCTIONAL SUPERVISOR: JOSEPH W. HORTON
CALCULATED-DESIGNED BY: JACK KEMMERLY
CHECKED BY: AC MURPHY
REVISED BY
DATE REVISED

LAST REVISION 3-8-10
DATE PLOTTED => 03-FEB-2011
TIME PLOTTED => 13:18

Dist	COUNTY	ROUTE	POST MILES TOTAL PROJECT	SHEET No.	TOTAL SHEETS
03	Yol,Sac	80	R10.9/R11.7, M0.0/M10.4	555	1012

REGISTERED CIVIL ENGINEER — DATE 6-14-10

9-7-10
PLANS APPROVAL DATE

REGISTERED PROFESSIONAL ENGINEER A.C. Murphy No. 47645 Exp. 12-31-11 CIVIL STATE OF CALIFORNIA

THE STATE OF CALIFORNIA OR ITS OFFICERS OR AGENTS SHALL NOT BE RESPONSIBLE FOR THE ACCURACY OR COMPLETENESS OF ELECTRONIC COPIES OF THIS PLAN SHEET.

ROADSIDE SIGN QUANTITIES (CONTINUED)

SIGN NUMBER (Sht-No.)	SIGN CODE FEDERAL	SIGN CODE CALIFORNIA	PANEL SIZE (INCHES)	"C" DIM IN FEET	POST SIZE AND LENGTH 4" X 4"	4" X 6"	6" X 6"	6" X 8"	TYPE L Lt	TYPE L Rt	ROADSIDE SIGN ONE POST (EACH)	ROADSIDE SIGN TWO POST (EACH)	INSTALL SIGN (SSBM) (EACH)	ROADSIDE SIGN (BARRIER MOUNTED) (EACH)	INSTALL SIGN PANEL (MAHM) (EACH)	INSTALL ROADSIDE SIGN (LWBP) (EACH)	REMOVE ROADSIDE SIGN (EACH)	REMOVE ROADSIDE SIGN (SSBM) (EACH)	RELOCATE ROADSIDE SIGN (EACH)	RELOCATE ROADSIDE SIGN (BARRIER MOUNTED) (EACH)	RESET ROADSIDE SIGN (EACH)	REMARKS
24-4		R6-3	48 X 60	7			18′				1											
24-5	W4-7L	W74(Lt)	60 X 60	7		20′						1										
25-1		SG42															1					
25-2		SG42	114 X 60	7				18′				1										
25-3		R93-2	36 X 84	7										1								TYPE A
		R93-2	36 X 84	7																		
25-4		G50 G27-2(80) G59 G27-2(5)																1 1 1 1				
25-5		G50 G27-2(80)	30 X 15 36 X 36	6									1 1									SEE NOTE 4 SEE NOTE 4
25-6		R6-3A	54 X 66	5			16′				1											
25-7		R18A(Rt)	66 X 48	7		16′						1										
25-8		G84															1					
25-9		G84-2	54 X 48	7			16′				1											"EXIT 90"
25-10		R89(2)	36 X 9										1									SEE NOTE 5
27-1		G84-2	54 X 48	7			16′				1											"EXIT 90"
27-2		G84															1					
27-3	D9-11 D9-8	G66-12 G81-52 G66-4 G58(EXIT)	30 X 30 30 X 8 30 X 30 30 X 24	5			20′				1											
27-4	D9-11 D9-8	G66-12 G81-52 G66-4 G58(EXIT)															1					
27-5	W4-1R	W59(Rt)	48 X 48	7			18′				1											
27-6	W4-1R	W59(Rt)															1					
27-7		R86-3	36 X 66	7										1								TYPE J
		R86-3	36 X 66	7																		
27-8		G49 G27-2(80)	30 X 15 36 X 36	6									1 1									SEE NOTE 4 SEE NOTE 4
27-9		G49 G27-2(80)																1 1				
SHEET TOTAL											6	3	5	2	0	0	5	6	0	0	0	———

SIGN QUANTITIES

SQ-11

STATE OF CALIFORNIA - DEPARTMENT OF TRANSPORTATION
Caltrans
TRAFFIC

FUNCTIONAL SUPERVISOR: JOSEPH W. HORTON
CALCULATED-DESIGNED BY: JACK KEMMERLY
CHECKED BY: AC MURPHY
REVISED BY / DATE REVISED

LAST REVISION 3-8-10
DATE PLOTTED => 03-FEB-2011
TIME PLOTTED => 13:18

Dist	COUNTY	ROUTE	POST MILES TOTAL PROJECT	SHEET No.	TOTAL SHEETS
03	Yol,Sac	80	R10.9/R11.7, M0.0/M10.4	556	1012

REGISTERED CIVIL ENGINEER 6-14-10 DATE

9-7-10
PLANS APPROVAL DATE

REGISTERED PROFESSIONAL ENGINEER A.C. Murphy No. 47645 Exp. 12-31-11 CIVIL STATE OF CALIFORNIA

THE STATE OF CALIFORNIA OR ITS OFFICERS OR AGENTS SHALL NOT BE RESPONSIBLE FOR THE ACCURACY OR COMPLETENESS OF ELECTRONIC COPIES OF THIS PLAN SHEET.

ROADSIDE SIGN QUANTITIES (CONTINUED)

SIGN NUMBER (Sht-No.)	SIGN CODE FEDERAL	SIGN CODE CALIFORNIA	PANEL SIZE (INCHES)	"C" DIM IN FEET	POST SIZE AND LENGTH 4" X 4"	4" X 6"	6" X 6"	6" X 8"	TYPE L Lt	TYPE L Rt	ROADSIDE SIGN ONE POST (EACH)	ROADSIDE SIGN TWO POST (EACH)	INSTALL SIGN (SSBM) (EACH)	ROADSIDE SIGN (BARRIER MOUNTED) (EACH)	INSTALL SIGN PANEL (MAHM) (EACH)	INSTALL ROADSIDE SIGN (LWBP) (EACH)	REMOVE ROADSIDE SIGN (EACH)	REMOVE ROADSIDE SIGN (SSBM) (EACH)	RELOCATE ROADSIDE SIGN (EACH)	RELOCATE ROADSIDE SIGN (BARRIER MOUNTED) (EACH)	RESET ROADSIDE SIGN (EACH)	REMARKS
28-1		R93-2	36 X 84	7										1								TYPE I
		R93-2	36 X 84	7																		
29-1		S32 S32A S32-1																			1	
29-2		R86-3	36 X 66	7										1								TYPE E
29-3		S32 S32A S32-1																			1	
29-4		R86-3	36 X 66	7										1								TYPE E
29-5		G86-13 D9-11	216 X 78 30 X 30	6					22′	20′						1						
29-6		G86-13 D9-11															1					
30-1		R93-2	36 X 84	7										1								TYPE D
30-2		R93-2	36 X 84	7										1								TYPE D
30-3	R4-3	R56															1					
30-4	R4-3	R56	48 X 60	7			18′				1											
31-1		G50 G27-2(80)	30 X 15 36 X 36	6									1 1									SEE NOTE 4
31-2		G50 G27-2(80)																1 1				
31-3	W4-1R	W59(Rt)															1					
31-4	W4-1R	W59(Rt)	48 X 48	7			18′				1											
31-5		G84-2	54 X 48	7			16′				1											"EXIT 91"
31-6		G84															1					
31-7		R89(2)	36 X 9										1									SEE NOTE 5
32-1		R86-3	36 X 66	7										1								TYPE J
		R86-3	36 X 66	7																		
32-2	W4-1R	W59(Rt)	48 X 48	7			18′				1											
32-3	W4-1R	W59(Rt)															1					
32-4	W4-1R	W59(Rt)															1					
SHEET TOTAL											4	0	3	6	0	1	6	2	0	0	2	———

SIGN QUANTITIES

SQ-12

REVISED BY | DATE REVISED
JACK KEMMERLY | AC MURPHY
CALCULATED-DESIGNED BY | CHECKED BY
FUNCTIONAL SUPERVISOR
JOSEPH W. HORTON
STATE OF CALIFORNIA - DEPARTMENT OF TRANSPORTATION
Caltrans
TRAFFIC

LAST REVISION 3-8-10
DATE PLOTTED => 03-FEB-2011
TIME PLOTTED => 13:18

Dist	COUNTY	ROUTE	POST MILES TOTAL PROJECT	SHEET No.	TOTAL SHEETS
03	Yol,Sac	80	R10.9/R11.7, M0.0/M10.4	557	1012

REGISTERED CIVIL ENGINEER — DATE 6-14-10

9-7-10
PLANS APPROVAL DATE

REGISTERED PROFESSIONAL ENGINEER — A.C. Murphy — No. 47645 — Exp. 12-31-11 — CIVIL — STATE OF CALIFORNIA

THE STATE OF CALIFORNIA OR ITS OFFICERS OR AGENTS SHALL NOT BE RESPONSIBLE FOR THE ACCURACY OR COMPLETENESS OF ELECTRONIC COPIES OF THIS PLAN SHEET.

ROADSIDE SIGN QUANTITIES (CONTINUED)

SIGN NUMBER (Sht-No.)	SIGN CODE FEDERAL	SIGN CODE CALIFORNIA	PANEL SIZE (INCHES)	"C" DIM IN FEET	POST SIZE AND LENGTH 4" X 4"	4" X 6"	6" X 6"	6" X 8"	TYPE L Lt	TYPE L Rt	ROADSIDE SIGN ONE POST (EACH)	ROADSIDE SIGN TWO POST (EACH)	INSTALL SIGN (SSBM) (EACH)	ROADSIDE SIGN (BARRIER MOUNTED) (EACH)	INSTALL SIGN PANEL (MAHM) (EACH)	INSTALL ROADSIDE SIGN (LWBP) (EACH)	REMOVE ROADSIDE SIGN (EACH)	REMOVE ROADSIDE SIGN (SSBM) (EACH)	RELOCATE ROADSIDE SIGN (EACH)	RELOCATE ROADSIDE SIGN (BARRIER MOUNTED) (EACH)	RESET ROADSIDE SIGN (EACH)	REMARKS
32-5	W4-1R	W59(Rt)	48 X 48	7			18′				1											
32-6		R89(2)	36 X 9										1									SEE NOTE 5
33-1		G84-2	54 X 48	7			16′				1											"EXIT 91"
33-2		G84															1					
33-3		R93-2	36 X 84	7										1								TYPE I
		R93-2	36 X 84	7																		
33-4	W4-1R	W59(Rt)	48 X 48	7			18′				1											
33-5	W4-1R	W59(Rt)															1					
33-6		G49 G27-2(80)																1 1				
33-7		G49 G27-2(80)	30 X 15 36 X 36	6									1 1									SEE NOTE 4
35-1		G86-13 D9-11	216 X 78 30 X 30	6					24′	20′						1						
35-2		G86-13 D9-11															1					
35-3		SR50-2 R93A	36 X 78 36 X 15	6										1								TYPE K
		SR50-2 R93A	36 X 78 36 X 15	6																		
35-4		G50 G27-2(80)																1 1				
35-5		G50 G27-2(80)	30 X 15 36 X 36	6									1 1									SEE NOTE 4
36-1		G84															1					
36-2		G84-2	54 X 48	7			16′				1											"EXIT 92"
36-3		R86-3	36 X 66	7										1								TYPE J
		R86-3	36 X 66	7																		
37-1		S32 S32A	54 X 42 15 X 18	7.5′			18′				1											
37-2		S32 S32-1															1					
37-3		R93-2	36 X 84	7										1								TYPE I
		R93-2	36 X 84	7																		
SHEET TOTAL											5	0	5	4	0	1	5	4	0	0	0	———

SIGN QUANTITIES

SQ-13

STATE OF CALIFORNIA - DEPARTMENT OF TRANSPORTATION
Caltrans
TRAFFIC

FUNCTIONAL SUPERVISOR: JOSEPH W. HORTON
CALCULATED-DESIGNED BY: JACK KEMMERLY
CHECKED BY: AC MURPHY
REVISED BY
DATE REVISED

LAST REVISION 3-8-10
DATE PLOTTED => 03-FEB-2011
TIME PLOTTED => 13:18

Dist	COUNTY	ROUTE	POST MILES TOTAL PROJECT	SHEET No.	TOTAL SHEETS
03	Yol,Sac	80	R10.9/R11.7, M0.0/M10.4	558	1012

REGISTERED CIVIL ENGINEER — DATE 6-14-10

9-7-10
PLANS APPROVAL DATE

REGISTERED PROFESSIONAL ENGINEER A.C. Murphy No. 47645 Exp. 12-31-11 CIVIL STATE OF CALIFORNIA

THE STATE OF CALIFORNIA OR ITS OFFICERS OR AGENTS SHALL NOT BE RESPONSIBLE FOR THE ACCURACY OR COMPLETENESS OF ELECTRONIC COPIES OF THIS PLAN SHEET.

ROADSIDE SIGN QUANTITIES (CONTINUED)

SIGN NUMBER (Sht-No.)	SIGN CODE FEDERAL	SIGN CODE CALIFORNIA	PANEL SIZE (INCHES)	"C" DIM IN FEET	POST SIZE AND LENGTH 4" X 4"	4" X 6"	6" X 6"	6" X 8"	TYPE L L+	TYPE L R+	ROADSIDE SIGN ONE POST (EACH)	ROADSIDE SIGN TWO POST (EACH)	INSTALL SIGN (SSBM) (EACH)	ROADSIDE SIGN (BARRIER MOUNTED) (EACH)	INSTALL SIGN PANEL (MAHM) (EACH)	INSTALL ROADSIDE SIGN (LWBP) (EACH)	REMOVE ROADSIDE SIGN (EACH)	REMOVE ROADSIDE SIGN (SSBM) (EACH)	RELOCATE ROADSIDE SIGN (EACH)	RELOCATE ROADSIDE SIGN (BARRIER MOUNTED) (EACH)	RESET ROADSIDE SIGN (EACH)	REMARKS
37-4		G84-2	54 X 48	7			16′				1											"EXIT 92"
37-5		G84															1					
38-1		G84-2	54 X 48	7			16′				1											"EXIT 93"
38-2		G84															1					
38-3		R82-1 R82B															1					
38-4		R86-3	36 X 66	7			18′				1											
39-1	R9-3a R5-10c	R96 R43	24 X 24 24 X 12	5	12′						1											
39-2	R3-2	R17	24 X 24	7	14′						1											
39-3		R91-1(L+,2)																			1	
39-4		R86-3	36 X 66	7										1								TYPE E
39-5	R3-1	R16	24 X 24	7	14′						1											
39-6		R16B															1					
39-7	R3-2	R17	24 X 24	7	14′						1											
39-8	R9-3a R5-10c	R96 R43	24 X 24 24 X 12	5	12′						1											
39-9	R3-1	R16	24 X 24	7	14′						1											
40-1		R93-2	36 X 84	7										1								TYPE D
40-2		R88																			1	
40-3		SR50-2 R93A															1					
40-4	W4-1R	W59(R+)	48 X 48	7			18′				1											
40-5	W4-1R	W59(R+)															1					
41-1		R84-1															1					
42-1		R86-3	36 X 66	7										1								TYPE E
43-1		RSP-3	36 X 84	7										1								TYPE D
43-2		SR50-2 R93A	36 X 78 36 X 15	6										1								TYPE F
SHEET TOTAL											10	0	0	5	0	0	7	0	0	0	2	————

SIGN QUANTITIES

SQ-14

STATE OF CALIFORNIA - DEPARTMENT OF TRANSPORTATION
Caltrans
TRAFFIC

FUNCTIONAL SUPERVISOR: JOSEPH W. HORTON
CALCULATED-DESIGNED BY: JACK KEMMERLY
CHECKED BY: AC MURPHY
REVISED BY / DATE REVISED

LAST REVISION 3-29-10
DATE PLOTTED => 03-FEB-2011
TIME PLOTTED => 13:18

Dist	COUNTY	ROUTE	POST MILES TOTAL PROJECT	SHEET No.	TOTAL SHEETS
03	Yol,Sac	80	R10.9/R11.7, M0.0/M10.4	559	1012

REGISTERED CIVIL ENGINEER 6-14-10 DATE

9-7-10
PLANS APPROVAL DATE

REGISTERED PROFESSIONAL ENGINEER A.C. Murphy No. 47645 Exp. 12-31-11 CIVIL STATE OF CALIFORNIA

THE STATE OF CALIFORNIA OR ITS OFFICERS OR AGENTS SHALL NOT BE RESPONSIBLE FOR THE ACCURACY OR COMPLETENESS OF ELECTRONIC COPIES OF THIS PLAN SHEET.

ROADSIDE SIGN QUANTITIES (CONTINUED)

SIGN NUMBER (Sht-No.)	SIGN CODE FEDERAL	SIGN CODE CALIFORNIA	PANEL SIZE (INCHES)	"C" DIM IN FEET	POST SIZE AND LENGTH 4" X 4"	4" X 6"	6" X 6"	6" X 8"	TYPE L L+	TYPE L R+	ROADSIDE SIGN ONE POST (EACH)	ROADSIDE SIGN TWO POST (EACH)	INSTALL SIGN (SSBM) (EACH)	ROADSIDE SIGN (BARRIER MOUNTED) (EACH)	INSTALL SIGN PANEL (MAHM) (EACH)	INSTALL ROADSIDE SIGN (LWBP) (EACH)	REMOVE ROADSIDE SIGN (EACH)	REMOVE ROADSIDE SIGN (SSBM) (EACH)	RELOCATE ROADSIDE SIGN (EACH)	RELOCATE ROADSIDE SIGN (BARRIER MOUNTED) (EACH)	RESET ROADSIDE SIGN (EACH)	REMARKS
44-1	R3-2	R17	24 X 24	7									1									SEE NOTE 4
44-2	R3-2	R17	24 X 24	7									1									SEE NOTE 4
44-3	R3-1	R16	24 X 24	7	14′						1											
45-1		R16B															1					
45-2	R3-1	R16	24 X 24	7	14′						1											
46-1	R3-18	R34-2	36 X 36												1							SEE NOTE 7
46-2		G77															1					
46-3		R16B															1					
46-4	R3-1	R16	24 X 24	7	14′						1											
46-5	R9-3a R5-10c	R96 R43	24 X 24 24 X 12	5	12′						1											
47-1	R3-18	R34-2	36 X 36												1							SEE NOTE 7
47-2	R3-1	R16	24 X 24	7	14′						1											
47-3		R16B															1					
SD1-1		R16B															1					
SD1-2	R3-1	R16	24 X 24	7	14′						1											
SD1-3	R3-18	R34-2	36 X 36												1							SEE NOTE 7
SD1-4		G78															1					
SD1-5		G78															1					
SD1-6		G77															1					
SD1-7		G50 G27-2(80) G36 G49 G27-2(80) G43															1					
SD1-8		G92 G27-2(80) G50 G43															1					
SD1-9		G78															1					
SHEET TOTAL											6	0	2	0	3	0	11	0	0	0	0	———

SIGN QUANTITIES

SQ-15

STATE OF CALIFORNIA - DEPARTMENT OF TRANSPORTATION
Caltrans TRAFFIC

FUNCTIONAL SUPERVISOR: JOSEPH W. HORTON
CALCULATED-DESIGNED BY: JACK KEMMERLY
CHECKED BY: AC MURPHY
REVISED BY
DATE REVISED

LAST REVISION 3-8-10
DATE PLOTTED => 03-FEB-2011
TIME PLOTTED => 13:18

Dist	COUNTY	ROUTE	POST MILES TOTAL PROJECT	SHEET No.	TOTAL SHEETS
03	Yol,Sac	80	R10.9/R11.7, M0.0/M10.4	560	1012

REGISTERED CIVIL ENGINEER 6-14-10 DATE

9-7-10
PLANS APPROVAL DATE

REGISTERED PROFESSIONAL ENGINEER A.C. Murphy No. 47645 Exp. 12-31-11 CIVIL STATE OF CALIFORNIA

THE STATE OF CALIFORNIA OR ITS OFFICERS OR AGENTS SHALL NOT BE RESPONSIBLE FOR THE ACCURACY OR COMPLETENESS OF ELECTRONIC COPIES OF THIS PLAN SHEET.

ROADSIDE SIGN QUANTITIES (CONTINUED)

SIGN NUMBER (Sht-No.)	SIGN CODE FEDERAL	SIGN CODE CALIFORNIA	PANEL SIZE (INCHES)	"C" DIM IN FEET	POST SIZE AND LENGTH 4" X 4"	4" X 6"	6" X 6"	6" X 8"	TYPE L L†	TYPE L R†	ROADSIDE SIGN ONE POST (EACH)	ROADSIDE SIGN TWO POST (EACH)	INSTALL SIGN (SSBM) (EACH)	ROADSIDE SIGN (BARRIER MOUNTED) (EACH)	INSTALL SIGN PANEL (MAHM) (EACH)	INSTALL ROADSIDE SIGN (LWBP) (EACH)	REMOVE ROADSIDE SIGN (EACH)	REMOVE ROADSIDE SIGN (SSBM) (EACH)	RELOCATE ROADSIDE SIGN (EACH)	RELOCATE ROADSIDE SIGN (BARRIER MOUNTED) (EACH)	RESET ROADSIDE SIGN (EACH)	REMARKS
SD1-10		G92 G27-2(80) G50 G43	48 X 30 24 X 24 26 X 12 21 X 15	2		14′					1											
SD1-11	R3-18	R34-2	36 X 36												1							SEE NOTE 7
SD1-12	R3-1	R16	24 X 24	7	14′						1											
SD1-13		R16B															1					
SD1-14		G92 G27-2(80) G50 G44	48 X 30 24 X 24 26 X 12 21 X 15	2		14′					1											
SD1-15		G77															1					
SD1-16		G92 G27-2(80) G50 G43	48 X 30 24 X 24 26 X 12 21 X 15	2		14′					1											
SD1-17		G92 G27-2(80) G50 G44	48 X 30 24 X 24 26 X 12 21 X 15	2		14′					1											
SD1-18		G92 G27-2(80) G50 G44															1					
SD1-19	R5-10a	R44	30 X 36	5		14′					1											
SD1-20	R5-10a	R44															1					
SD2-1		G78															1					
SD2-2	R3-1	R16	24 X 24	7	14′						1											
SD2-3		G92															1					
SD2-4		G92 G27-2(80) G49 G43	48 X 30 24 X 24 26 X 12 21 X 15	2		14′					1											
SD2-5		G50 G27-2(80) G36 G49 G27-2(80) G44															1					
SHEET TOTAL											8	0	0	0	1	0	7	0	0	0	0	

SIGN QUANTITIES

SQ-16

STATE OF CALIFORNIA - DEPARTMENT OF TRANSPORTATION
Caltrans
TRAFFIC

FUNCTIONAL SUPERVISOR: JOSEPH W. HORTON
CALCULATED-DESIGNED BY: JACK KEMMERLY
CHECKED BY: AC MURPHY
REVISED BY
DATE REVISED

LAST REVISION 3-8-10
DATE PLOTTED => 03-FEB-2011
TIME PLOTTED => 13:18

Dist	COUNTY	ROUTE	POST MILES TOTAL PROJECT	SHEET No.	TOTAL SHEETS
03	Yol,Sac	80	R10.9/R11.7, M0.0/M10.4	561	1012

REGISTERED CIVIL ENGINEER 6-14-10 DATE

9-7-10
PLANS APPROVAL DATE

REGISTERED PROFESSIONAL ENGINEER A.C. Murphy No. 47645 Exp. 12-31-11 CIVIL STATE OF CALIFORNIA

THE STATE OF CALIFORNIA OR ITS OFFICERS OR AGENTS SHALL NOT BE RESPONSIBLE FOR THE ACCURACY OR COMPLETENESS OF ELECTRONIC COPIES OF THIS PLAN SHEET.

ROADSIDE SIGN QUANTITIES (CONTINUED)

SIGN NUMBER (Sht-No.)	SIGN CODE FEDERAL	SIGN CODE CALIFORNIA	PANEL SIZE (INCHES)	"C" DIM IN FEET	POST SIZE AND LENGTH 4" X 4"	4" X 6"	6" X 6"	6" X 8"	TYPE L L+	TYPE L R+	ROADSIDE SIGN ONE POST (EACH)	ROADSIDE SIGN TWO POST (EACH)	INSTALL SIGN (SSBM) (EACH)	ROADSIDE SIGN (BARRIER MOUNTED) (EACH)	INSTALL SIGN PANEL (MAHM) (EACH)	INSTALL ROADSIDE SIGN (LWBP) (EACH)	REMOVE ROADSIDE SIGN (EACH)	REMOVE ROADSIDE SIGN (SSBM) (EACH)	RELOCATE ROADSIDE SIGN (EACH)	RELOCATE ROADSIDE SIGN (BARRIER MOUNTED) (EACH)	RESET ROADSIDE SIGN (EACH)	REMARKS
SD2-6		G92 G27-2(80) G49 G43	48 X 30 24 X 24 26 X 12 21 X 15	2		14′					1											
SD2-7		G77 G92															1					
SD2-8	R3-2	R17	24 X 24	7	14′						1											
SD2-9		G50 G27-2(80) G44															1					
SD2-10		G92 G27-2(80) G50 G44	48 X 30 24 X 24 26 X 12 21 X 15	2		14′					1											
SD2-11	R5-10a	R44	30 X 36	5		14′					1											
SD2-12		G92 G27-2(80) G50															1					
SD2-13	R5-10a	R44															1					
SD2-14		G92 G27-2(80) G50 G43	48 X 30 24 X 24 26 X 12 21 X 15	2		14′					1											
SD2-15		G78 G92															1					
SD2-16	R3-1	R16	24 X 24	7	14′						1											
SD2-17		G49 G27-2(80) G44															1					
SD2-18	R5-10a	R44															1					
SD2-19	R3-2	R17	24 X 24	7	14′						1											
SD2-20		G92															1					
SD2-21		G92 G27-2(80) G50 G43	48 X 30 24 X 24 26 X 12 21 X 15	2		14′					1											
SD2-22		G77															1					
SD2-23	R5-10a	R44	30 X 36	5		14′					1											
SD2-24		G92 G27-2(80) G50															1					
SHEET TOTAL											9	0	0	0	0	0	10	0	0	0	0	———

SIGN QUANTITIES

SQ-17

STATE OF CALIFORNIA - DEPARTMENT OF TRANSPORTATION
TRAFFIC
Caltrans
FUNCTIONAL SUPERVISOR: JOSEPH W. HORTON
CALCULATED-DESIGNED BY: JACK KEMMERLY
CHECKED BY: AC MURPHY
REVISED BY
DATE REVISED

LAST REVISION 3-8-10
DATE PLOTTED => 03-FEB-2011
TIME PLOTTED => 13:19

Dist	COUNTY	ROUTE	POST MILES TOTAL PROJECT	SHEET No.	TOTAL SHEETS
03	Yol,Sac	80	R10.9/R11.7, MO.0/M10.4	562	1012

REGISTERED CIVIL ENGINEER 7-29-10 DATE

9-7-10
PLANS APPROVAL DATE

REGISTERED PROFESSIONAL ENGINEER A.C. Murphy No. 47645 Exp. 12-31-11 CIVIL STATE OF CALIFORNIA

THE STATE OF CALIFORNIA OR ITS OFFICERS OR AGENTS SHALL NOT BE RESPONSIBLE FOR THE ACCURACY OR COMPLETENESS OF ELECTRONIC COPIES OF THIS PLAN SHEET.

ROADSIDE SIGN QUANTITIES (CONTINUED)

SIGN NUMBER (Sht-No.)	SIGN CODE FEDERAL	SIGN CODE CALIFORNIA	PANEL SIZE (INCHES)	"C" DIM IN FEET	POST SIZE AND LENGTH 4" X 4"	4" X 6"	6" X 6"	6" X 8"	TYPE L Lt	TYPE L Rt	ROADSIDE SIGN ONE POST (EACH)	ROADSIDE SIGN TWO POST (EACH)	INSTALL SIGN (SSBM) (EACH)	ROADSIDE SIGN (BARRIER MOUNTED) (EACH)	INSTALL SIGN PANEL (MAHM) (EACH)	INSTALL ROADSIDE SIGN (LWBP) (EACH)	REMOVE ROADSIDE SIGN (EACH)	REMOVE ROADSIDE SIGN (SSBM) (EACH)	RELOCATE ROADSIDE SIGN (EACH)	RELOCATE ROADSIDE SIGN (BARRIER MOUNTED) (EACH)	RESET ROADSIDE SIGN (EACH)	REMARKS
SD2-25		G92 G27-2(80) G50 G44	48 X 30 24 X 24 26 X 12 21 X 15	2		14′					1											
SD3-1		G78															1					
SD3-2		R17B															1					
SD3-3	R3-2	R17	24 X 24	7	14′						1											
SD3-4		R16B															1					
SD3-5	R3-1	R16	24 X 24	7	14′						1											
SD3-6		R17B															1					
SD3-7	R3-2	R17	24 X 24	7	14′						1											
SD3-8		CITY SIGN																	1			BUS STOP SIGN
SD3-9		R91-1(Lt,2)	48 X 66	6			18′				1											
SHEET TOTAL											5	0	0	0	0	0	4	0	1	0	0	———
SHEET TOTAL FROM SQ-5											3	3	0	4	0	0	8	0	0	0	1	———
SHEET TOTAL FROM SQ-6											7	1	8	4	0	0	5	4	0	1	0	———
SHEET TOTAL FROM SQ-7											7	3	2	4	0	0	8	2	0	0	0	———
SHEET TOTAL FROM SQ-8											6	4	3	2	0	0	11	2	0	0	0	———
SHEET TOTAL FROM SQ-9											1	5	4	4	0	0	9	4	0	0	0	———
SHEET TOTAL FROM SQ-10											6	2	4	2	0	0	11	1	0	0	0	———
SHEET TOTAL FROM SQ-11											6	3	5	2	0	0	5	6	0	0	0	———
SHEET TOTAL FROM SQ-12											4	0	3	6	0	1	6	2	0	0	2	———
SHEET TOTAL FROM SQ-13											5	0	5	4	0	1	5	4	0	0	0	———
SHEET TOTAL FROM SQ-14											10	0	0	5	0	0	7	0	0	0	2	———
SHEET TOTAL FROM SQ-15											6	0	2	0	3	0	11	0	0	0	0	———
SHEET TOTAL FROM SQ-16											8	0	0	0	1	0	7	0	0	0	0	———
SHEET TOTAL FROM SQ-17											9	0	0	0	0	0	10	0	0	0	0	———
SHEET TOTAL FROM SCQ-2											0	0	0	0	0	0	2	0	2	0	3	———
TOTAL											83	21	36	37	4	2	109	25	3	1	8	———

SIGN QUANTITIES

SQ-18

REVISED BY | DATE REVISED
JACK KEMMERLY | AC MURPHY
CALCULATED-DESIGNED BY | CHECKED BY
FUNCTIONAL SUPERVISOR
JOSEPH W. HORTON
STATE OF CALIFORNIA - DEPARTMENT OF TRANSPORTATION
Caltrans
TRAFFIC

LAST REVISION 7-29-10 | DATE PLOTTED => 03-FEB-2011 | TIME PLOTTED => 13:19

Dist	COUNTY	ROUTE	POST MILES TOTAL PROJECT	SHEET No.	TOTAL SHEETS
03	Yol,Sac	80	R10.9/R11.7, M0.0/M10.4	563	1012

REGISTERED CIVIL ENGINEER — DATE 6-14-10

9-7-10
PLANS APPROVAL DATE

REGISTERED PROFESSIONAL ENGINEER A.C. Murphy No. 47645 Exp. 12-31-11 CIVIL STATE OF CALIFORNIA

THE STATE OF CALIFORNIA OR ITS OFFICERS OR AGENTS SHALL NOT BE RESPONSIBLE FOR THE ACCURACY OR COMPLETENESS OF ELECTRONIC COPIES OF THIS PLAN SHEET.

ROADSIDE SIGN PANEL QUANTITIES (CONTRACTOR-FURNISHED)

SIGN CODE	SIGN MESSAGE/DESCRIPTION	SIGN SIZE L X D (INCHES)	SIGN AREA (SQFT)	NUMBER OF SIGNS	BACKGROUND SHEETING COLOR	BACKGROUND RETROREFLECTIVE ASTM TYPE	LEGEND SHEETING COLOR	LEGEND RETROREFLECTIVE ASTM TYPE	PROTECTIVE OVERLAY PREMIUM	FURNISH SINGLE SHEET ALUMINUM SIGN UNFRAMED 0.063" (SQFT)	UNFRAMED 0.080" (SQFT)	FRAMED 0.063" (SQFT)	FRAMED 0.080" (SQFT)	FURNISH LAMINATED PANEL SIGN (1"-TYPE B) (SQFT)	FURNISH LAMINATED PANEL SIGN (2.5"-TYPE B) (SQFT)	COMMENTS
W8-5	SLIPPERY WHEN WET SYMBOL	48 x 48	16.00	2	YELLOW	III	BLACK		X		32.00					SEE PD-4
W4-2R	LANE REDUCTION SYMBOL	48 x 48	16.00	2	YELLOW	III	BLACK		X		32.00					SEE PD-5 AND PD-12
W9-1R	RIGHT LANE ENDS	48 x 48	16.00	2	YELLOW	III	BLACK		X		32.00					SEE PD-5 AND PD-12
W4-1R	MERGE FROM RIGHT SYMBOL	48 x 48	16.00	19	YELLOW	III	BLACK		X		304.00					PD-6,-7,-12,-16,-21,-27,-31, -32,-33,-40
SPEC	TRAILERS - CAMPERS GUSTY WIND AREA NEXT 9 MILES	150 x 54	56.25	1	YELLOW	III	BLACK		X					56.25		SEE PD-10
W8-4	SOFT SHOULDER	48 x 48	16.00	1	YELLOW	III	BLACK		X		16.00					SEE PD-10
W4-7L	THROUGH TRAFFIC MERGE LEFT	60 x 60	25.00	5	YELLOW	III	BLACK		X				125.00			SEE PD-14,-18,-19,-23,-24
W73(R†)<CA>	RT LANE EXITS AHEAD	60 x 60	25.00	1	YELLOW	III	BLACK		X				25.00			SEE PD-15
R2-1(65)<CA>	SPEED LIMIT 65	48 x 60	20.00	1	WHITE	III	BLACK		X		20.00					SEE PD-23
R3-2	NO LEFT TURN SYMBOL	24 x 24	4.00	8	WHITE	IX	BLACK / RED	IX	X	32.00						SEE PD-39,PD-44,SD-2,SD-3
R3-1	NO RIGHT TURN SYMBOL	24 x 24	4.00	12	WHITE	IX	BLACK / RED	IX	X	48.00						SEE PD-16,-39,-44,-45,-46,-47 SEE SD-1,SD-2,SD-3
R4-3	SLOWER TRAFFIC KEEP RIGHT	48 x 60	20.00	2	WHITE	III	BLACK		X		40.00					SEE PD-16 AND PD-30
R18A(R†)<CA>	RIGHT LANE MUST EXIT	66 x 48	22.00	4	WHITE	III	BLACK		X			88.00				SEE PD-17,-20,-22,-25
R48-2<CA>	SPEED ENFORCED BY AIRCRAFT	48 x 60	20.00	1	WHITE	III	BLACK		X	20.00						SEE PD-15
R82-1<CA>	CARPOOL LANE AHEAD ½ MILE	36 x 66	16.50	1	WHITE / BLACK	III	BLACK / WHITE	III	X	16.50						SEE PD-3
SR50-2<CA>	CARPOOL VIOLATION $ MINIMUM FINE	36 x 78	19.50	8	WHITE	III	BLACK		X	156.00						SEE PD-4,-11,-23,-35,-43
R82B<CA>	SPECIFIC HOURS PLAQUE	36 x 24	6.00	1	WHITE	III	BLACK		X	6.00						SEE PD-3
R93-2<CA>	CARPOOL IS 3 OR MORE PERSONS PER VEHICLE	36 x 84	21.00	22	WHITE	III	BLACK / WHITE	III	X	462.00						SEE PD-4,-5,-8,-12,-15,-18,-20 -25,-28,-30,-33,-37,-40
R93A<CA>	VEHICLES WITH DMV CLEAN AIR DECAL OK	36 x 15	3.75	8	WHITE	III	BLACK		X	30.00						SEE PD-4,-11,-23,-35, -43
R86-3<CA>	LEFT LANE CARPOOLS ONLY 7 AM TO 10 AM 3PM TO 7PM	36 x 66	16.50	23	WHITE / BLACK	III	BLACK / WHITE	III	X	379.50						SEE PD-5,-7,-11,-14,-17,-20, -24,-27,-29,-32,-36,-38, -39,-42
R89(2)<CA>	2 CARS PER GREEN	36 x 9	2.25	9	WHITE	III	BLACK		X	20.25						SEE PD-6,-7,-21,-25,-31,-32
R48-1<CA>	RADAR ENFORCED	36 x 18	4.50	1	WHITE	III	BLACK		X	4.50						SEE PD-23
R6-3<CA>	TRUCKS 3 AXLES OR MORE 55 MPH MAXIMUM	48 x 60	20.00	1	WHITE	III	BLACK		X		20.00					SEE PD-24
R6-3A<CA>	TRUCKS 3 AXLES OR MORE RIGHT 2 LANES ONLY	54 x 66	24.75	1	WHITE	III	BLACK		X		24.75					SEE PD-25
RSP-3	END ALL CARPOOL LANE ACCESS	36 x 84	21.00	1	WHITE / BLACK	III	BLACK / WHITE	III	X	21.00						SEE PD-43
SHEET TOTAL										1,195.75	520.75	88.00	150.00	56.25	0.00	————

NOTES:

1. CALIFORNIA SIGN CODES ARE DESIGNATED BY <CA>. OTHERWISE, FEDERAL SIGN CODES ARE SHOWN.
2. DETAILED SIGN PANEL FABRICATION DRAWINGS SHOWING EXACT PANEL LAYOUTS WILL BE FURNISHED TO THE CONTRACTOR.

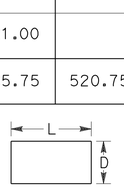

L = LENGTH OF SIGN
D = DEPTH OF SIGN

SIGN PANEL QUANTITIES

CONTRACTOR FURNISHED SIGNS

SQ-19

STATE OF CALIFORNIA - DEPARTMENT OF TRANSPORTATION
Caltrans
TRAFFIC

FUNCTIONAL SUPERVISOR: JOSEPH W. HORTON
CALCULATED-DESIGNED BY: JACK KEMMERLY
CHECKED BY: AC MURPHY
REVISED BY / DATE REVISED

LAST REVISION 6-3-10
DATE PLOTTED => 03-FEB-2011
TIME PLOTTED => 13:19

Dist	COUNTY	ROUTE	POST MILES TOTAL PROJECT	SHEET No.	TOTAL SHEETS
03	Yol,Sac	80	R10.9/R11.7, M0.0/M10.4	564	1012

REGISTERED CIVIL ENGINEER 6-14-10 DATE

9-7-10
PLANS APPROVAL DATE

REGISTERED PROFESSIONAL ENGINEER A.C. Murphy No. 47645 Exp. 12-31-11 CIVIL STATE OF CALIFORNIA

THE STATE OF CALIFORNIA OR ITS OFFICERS OR AGENTS SHALL NOT BE RESPONSIBLE FOR THE ACCURACY OR COMPLETENESS OF ELECTRONIC COPIES OF THIS PLAN SHEET.

ROADSIDE SIGN PANEL QUANTITIES (CONTRACTOR-FURNISHED), CONTINUED

SIGN CODE	SIGN MESSAGE/DESCRIPTION	SIGN SIZE L X D (INCHES)	SIGN AREA (SQFT)	NUMBER OF SIGNS	BACKGROUND SHEETING COLOR	BACKGROUND RETROREFLECTIVE ASTM TYPE	LEGEND SHEETING COLOR	LEGEND RETROREFLECTIVE ASTM TYPE	PROTECTIVE OVERLAY PREMIUM	FURNISH SINGLE SHEET ALUMINUM SIGN UNFRAMED 0.063" SQFT	UNFRAMED 0.080" SQFT	FRAMED 0.063" SQFT	FRAMED 0.080" SQFT	FURNISH LAMINATED PANEL SIGN (1"-TYPE B) SQFT	FURNISH LAMINATED PANEL SIGN (2.5"-TYPE B) SQFT	COMMENTS
R5-10C	PEDESTRIANS PROHIBITED	24 x 12	2.00	3	WHITE	III	BLACK		X	6.00						SEE PD-39 AND PD-46
R5-10a	PEDESTRIANS BICYCLES MOTOR DRIVEN CYCLES PROHIBITED	30 x 36	7.50	3	WHITE	III	BLACK		X	22.50						SEE SD-1 AND SD-2
R3-18	COMBINATION LT TURN AND U TURN PROHIBITION SYMBOL	36 x 36	9.00	4	WHITE	III	BLACK RED	 III	X	36.00						SEE PD-46, PD-47 AND SD-1
R9-3a	NO PEDESTRIAN CROSSING SYMBOL	24 x 24	4.00	3	WHITE	III	BLACK RED	 III	X	12.00						SEE PD-39 AND PD-46
G9-5<CA>	Sacramento CITY LIMIT POP 418,711 ELEV 25	90 x 42	26.25	1	GREEN	IV	WHITE	IX	X				26.25			SEE PD-4
G86<CA>	CHP ACADEMY EXIT 83	96 x 60	40.00	1	GREEN	IV	WHITE	IX	X				40.00			SEE PD-4
G86<CA>	ACCESS LIMITED	96 x 24	16.00	1	GREEN	IV	WHITE	IX	X				16.00			SEE PD-4
G86<CA>	University of Phoenix EXIT 85	108 x 60	45.00	1	GREEN	IV	WHITE	IX	X				45.00			SEE PD-5
SG42<CA>	EXIT 85	78 x 96	52.00	2	BLUE	III	WHITE	III	X			104.00				SEE PD-5 AND PD-9
D9-11	DIESEL FUEL SYMBOL	30 x 30	6.25	6	BLUE	III	WHITE	III	X	37.50						SEE PD-5,-9,-14,-27,-29,-35
D9-8	FOOD SYMBOL	30 x 30	6.25	4	BLUE	III	WHITE	III	X	25.00						SEE PD-5,-9,-25,-27
D9-9	LODGING SYMBOL	30 x 30	6.25	3	BLUE	III	WHITE	III	X	18.75						SEE PD-5,-9,-25
G66-55<CA>	STAA TRUCK SERVICE SYMBOL	30 x 30	6.25	2	BLUE	III	WHITE	III	X	12.50						SEE PD-5 AND PD-9
G27-2<CA>	INTERSTATE ROUTE MARKER (80)	36 x 36	9.00	12	RED BLUE	III	WHITE	III	X	108.00						PD-6,-8,-11,-15,-17,-20 PD-22,-25,-27,-31,-33,-35
G50<CA>	WEST	30 x 15	3.13	7	BLUE	III	WHITE	III	X	21.88						PD-6,-11,-15,-20,-25,-31,-35
G84-2<CA>	EXIT 85 WITH ARROW	54 x 48	18.00	2	GREEN	III	WHITE	III	X		36.00					SEE PD-6 AND PD-8
G49<CA>	EAST	30 x 15	3.13	5	BLUE	III	WHITE	III	X	15.63						SEE PD-8,-17,-22,-27,-33
G86<CA>	Sac Intl Airport EXIT 86	114 x 78	61.75	2	GREEN	IV	WHITE	IX	X				123.50			SEE PD-9 AND PD-14
G84-2<CA>	EXIT 86 WITH ARROW	54 x 48	18.00	1	GREEN	III	WHITE	III	X		18.00					SEE PD-11
G86<CA>	Arco Arena EXIT 88	144 x 54	54.00	2	GREEN	IV	WHITE	IX	X					108.00		SEE PD-14 AND PD-19
G84-2<CA>	EXIT 88 WITH ARROW	54 x 48	18.00	2	GREEN	III	WHITE	III	X		36.00					SEE PD-15 AND PD-17
G84-2<CA>	EXIT 89 WITH ARROW	54 x 48	18.00	2	GREEN	III	WHITE	III	X		36.00					SEE PD-20 AND PD-22
SG42<CA>	EXIT 89	114 x 60	47.50	1	BLUE	III	WHITE	III	X				47.50			SEE PD-25
SHEET TOTAL										315.76	126.00	104.00	298.25	108.00	0.00	————

SIGN PANEL QUANTITIES

CONTRACTOR FURNISHED SIGNS

SQ-20

STATE OF CALIFORNIA - DEPARTMENT OF TRANSPORTATION
Caltrans® TRAFFIC

FUNCTIONAL SUPERVISOR: JOSEPH W. HORTON
CALCULATED-DESIGNED BY: AC MURPHY
CHECKED BY: JACK KEMMERLY
REVISED BY / DATE REVISED

LAST REVISION 6-3-10
DATE PLOTTED => 03-FEB-2011
TIME PLOTTED => 13:19

Dist	COUNTY	ROUTE	POST MILES TOTAL PROJECT	SHEET No.	TOTAL SHEETS
03	Yol,Sac	80	R10.9/R11.7, M0.0/M10.4	565	1012

REGISTERED CIVIL ENGINEER — DATE 7-29-10

9-7-10
PLANS APPROVAL DATE

REGISTERED PROFESSIONAL ENGINEER A.C. Murphy No. 47645 Exp. 12-31-11 CIVIL STATE OF CALIFORNIA

THE STATE OF CALIFORNIA OR ITS OFFICERS OR AGENTS SHALL NOT BE RESPONSIBLE FOR THE ACCURACY OR COMPLETENESS OF ELECTRONIC COPIES OF THIS PLAN SHEET.

ROADSIDE SIGN PANEL QUANTITIES (CONTRACTOR-FURNISHED), CONTINUED

SIGN CODE	SIGN MESSAGE/DESCRIPTION	SIGN SIZE L X D (INCHES)	SIGN AREA (SQFT)	NUMBER OF SIGNS	BACKGROUND SHEETING COLOR	BACKGROUND RETROREFLECTIVE ASTM TYPE	LEGEND SHEETING COLOR	LEGEND RETROREFLECTIVE ASTM TYPE	PROTECTIVE OVERLAY PREMIUM	FURNISH SINGLE SHEET ALUMINUM SIGN UNFRAMED 0.063" SQFT	UNFRAMED 0.080" SQFT	FRAMED 0.063" SQFT	FRAMED 0.080" SQFT	FURNISH LAMINATED PANEL SIGN (1"-TYPE B) SQFT	FURNISH LAMINATED PANEL SIGN (2.5"-TYPE B) SQFT	COMMENTS
R91-1(Lt,2)<CA>	LEFT CARPOOLS 2 OR MORE ONLY WHEN METERED	48 x 66	22.00	1	BLACK WHITE	 III	WHITE BLACK	III 			22.00					SEE SD-3
R84-1<CA>	END CARPOOL LANE	48 X 72	24.00	1	BLACK WHITE	 III	WHITE BLACK	III 			24.00					SEE PD-6
G66-11<CA>	METHANOL FUEL SYMBOL	30 x 30	6.25	1	BLUE	III	WHITE	III		6.25						SEE PD-25
G84-2<CA>	EXIT 90 WITH ARROW	54 x 48	18.00	2	GREEN	III	WHITE	III	X		36.00					SEE PD-25 AND PD-27
G81-52<CA>	LP GAS	30 x 8	1.67	1	BLUE	III	WHITE	III	X	1.67						SEE PD-27
G58<CA>	NEXT EXIT	30 x 24	5.00	1	BLUE	III	WHITE	III	X	5.00						SEE PD-27
G86-13<CA>	Rio Linda Del Paso Heights EXIT 91	216 x 78	117.00	2	GREEN	IV	WHITE	IX	X						234.00	SEE PD-29 AND PD-35
G84-2<CA>	EXIT 91 WITH ARROW	54 x 48	18.00	2	GREEN	III	WHITE	III	X		36.00					SEE PD-31 AND PD-33
G84-2<CA>	EXIT 92 WITH ARROW	54 x 48	18.00	2	GREEN	III	WHITE	III	X		36.00					SEE PD-36 AND PD-37
S32<CA>	ADOPT-A-HIGHWAY	54 x 42	15.75	1	PANTONE 327C WHITE	III	WHITE BLACK	III	X		15.75					SEE PD-37
S32A<CA>	ADOPT-A-HIGHWAY SYMBOL	15 x 18	1.88	1	PANTONE 327C PANTONE 165C	III	WHITE	III	X	1.88						SEE PD-37
G84-2<CA>	EXIT 93 WITH ARROW	54 x 48	18.00	1	GREEN	III	WHITE	III	X		18.00					SEE PD-38
G92<CA>	FREEWAY ENTRANCE	48 x 30	10.00	10	GREEN	III	WHITE	III	X		100.00					SEE SD-1 AND SD-2
G27-2(80)<CA>	INTERSTATE ROUTE MARKER (80)	24 x 24	4.00	10	RED BLUE	III	WHITE	III	X	40.00						SEE SD-1 AND SD-2
G50<CA>	WEST	26 x 12	2.17	8	BLUE	III	WHITE	III	X	17.36						SEE SD-1 AND SD-2
G49<CA>	EAST	26 x 12	2.17	2	BLUE	III	WHITE	III	X	4.34						SEE SD-2
G43<CA>	ARROW SYMBOL (DOWN AND RIGHT)	21 x 15	2.19	6	BLUE	III	WHITE	III	X	13.13						SEE SD-1 AND SD-2
G44<CA>	ARROW SYMBOL (DOWN AND LEFT)	21 x 15	2.19	4	BLUE	III	WHITE	III		8.75						SEE SD-1 AND SD-2
	SHEET TOTAL									98.38	287.75	0.00	0.00	0.00	234.00	_____
	SHEET TOTAL FROM SQ-19									1,195.75	520.75	88.00	150.00	56.25	0.00	_____
	SHEET TOTAL FROM SQ-20									315.76	126.00	104.00	298.25	108.00	0.00	_____
	TOTAL									1,609.89	934.50	192.00	448.25	164.25	234.00	_____

SIGN PANEL QUANTITIES

CONTRACTOR FURNISHED SIGNS

SQ-21

REVISED BY | DATE REVISED
JACK KEMMERLY | AC MURPHY
CALCULATED-DESIGNED BY | CHECKED BY
FUNCTIONAL SUPERVISOR: JOSEPH W. HORTON
STATE OF CALIFORNIA - DEPARTMENT OF TRANSPORTATION
Caltrans
TRAFFIC

LAST REVISION 7-29-10 | DATE PLOTTED => 03-FEB-2011 | TIME PLOTTED => 13:19

Dist	COUNTY	ROUTE	POST MILES TOTAL PROJECT	SHEET No.	TOTAL SHEETS
03	Yol,Sac	80	R10.9/R11.7, M0.0/M10.4	566	1012

REGISTERED CIVIL ENGINEER 6-14-10 DATE

9-7-10
PLANS APPROVAL DATE

REGISTERED PROFESSIONAL ENGINEER A.C. Murphy No. 47645 Exp. 12-31-11 CIVIL STATE OF CALIFORNIA

THE STATE OF CALIFORNIA OR ITS OFFICERS OR AGENTS SHALL NOT BE RESPONSIBLE FOR THE ACCURACY OR COMPLETENESS OF ELECTRONIC COPIES OF THIS PLAN SHEET.

OVERHEAD SIGN PANEL QUANTITIES (CONTRACTOR-FURNISHED)

SIGN CODE	OVERHEAD SIGN NUMBER (No.)	SIGN SIZE L X D (INCHES)	SIGN AREA (SQFT)	NUMBER OF SIGNS	BACKGROUND SHEETING COLOR	BACKGROUND RETROREFLECTIVE ASTM TYPE	LEGEND SHEETING COLOR	LEGEND RETROREFLECTIVE ASTM TYPE	PROTECTIVE OVERLAY PREMIUM	FURNISH LAMINATED PANEL SIGN (1"-TYPE A) SQFT	FURNISH FORMED PANEL SIGN (OVERHEAD) SQFT	REMARKS
G85<CA>	BS-40	240 x 70	116.67	1	GREEN	III	WHITE	IX	X		116.67	SEE PD-1
G23<CA>	BS-41	240 x 110	183.33	1	GREEN	III	WHITE	IX	X		183.33	SEE PD-2
G85<CA>	BS-42	240 x 110	183.33	1	GREEN	III	WHITE	IX	X		183.33	SEE PD-2
G83-5<CA>	AS-245	240 x 90	150.00	1	GREEN	III	WHITE	IX	X		150.00	SEE PD-3
G23<CA>	AS-246	240 x 90	150.00	1	GREEN	III	WHITE	IX	X		150.00	SEE PD-3
G85<CA>	AS-247	288 x 70	140.00	1	GREEN	III	WHITE	IX	X		140.00	SEE PD-6
G83-1<CA>	AS-248	276 x 100	191.67	1	GREEN	III	WHITE	IX	X	191.67		SEE PD-7
G83-5<CA>	AS-249	204 x 90	127.50	1	GREEN	III	WHITE	IX	X	127.50		SEE PD-7
G85<CA>	AS-250	240 x 100	166.67	1	GREEN	III	WHITE	IX	X	166.67		SEE PD-8
G24<CA>	AS-632	180 x 110	137.50	1	GREEN	III	WHITE	IX	X	137.50		SEE PD-9
G83<CA>	AS-632	276 x 110	210.83	1	GREEN	III	WHITE	IX	X	210.83		SEE PD-9
G23<CA>	AS-251	252 x 120	210.00	1	GREEN	III	WHITE	IX	X	210.00		SEE PD-9
G23<CA>	AS-252	252 x 120	210.00	1	GREEN	III	WHITE	IX	X	210.00		SEE PD-9
G24<CA>	AS-253	516 x 120	430.00	1	GREEN	III	WHITE	IX	X	430.00		SEE PD-10
G85<CA>	AS-253	276 x 120	230.00	1	GREEN	III	WHITE	IX	X	230.00		SEE PD-10
G83<CA>	AS-633	216 x 100	150.00	1	GREEN	III	WHITE	IX	X	150.00		SEE PD-11
G24<CA>	AS-115	144 x 110	110.00	1	GREEN	III	WHITE	IX	X		110.00	SEE PD-11
G24<CA>	AS-115	192 x 110	146.67	1	GREEN	III	WHITE	IX	X		146.67	SEE PD-11
G83-5<CA>	AS-136	192 x 90	120.00	1	GREEN	III	WHITE	IX	X	120.00		SEE PD-12
G83-5<CA>	AS-137	216 x 90	135.00	1	GREEN	III	WHITE	IX	X	135.00		SEE PD-12
G24<CA>	AS-401	516 x 120	430.00	1	GREEN	III	WHITE	IX	X	430.00		SEE PD-13
G85<CA>	AS-401	264 x 120	220.00	1	GREEN	III	WHITE	IX	X	220.00		SEE PD-13
G85<CA>	AS-401	192 X 120	160.00	1	GREEN	III	WHITE	IX	X	160.00		SEE PD-13
G23<CA>	AS-401	252 x 120	210.00	1	GREEN	III	WHITE	IX	X	210.00		SEE PD-13
G83<CA>	AS-402	300 x 70	145.83	1	GREEN	III	WHITE	IX	X	145.83		SEE PD-14
G85<CA>	AS-411	288 x 70	140.00	1	GREEN	III	WHITE	IX	X	140.00		SEE PD-15
G24<CA>	AS-415	288 x 120	240.00	1	GREEN	III	WHITE	IX	X	240.00		SEE PD-15
G83<CA>	AS-415	240 x 120	200.00	1	GREEN	III	WHITE	IX	X	200.00		SEE PD-15
G83<CA>	AS-415	192 x 120	160.00	1	GREEN	III	WHITE	IX	X	160.00		SEE PD-15
G83-5<CA>	AS-605	228 x 90	142.50	1	GREEN	III	WHITE	IX	X	142.50		SEE PD-16
G83<CA>	AS-606	276 x 100	191.67	1	GREEN	III	WHITE	IX	X	191.67		SEE PD-16
G85<CA>	AS-413	288 x 70	140.00	1	GREEN	III	WHITE	IX	X	140.00		SEE PD-17
G83<CA>	AS-417	300 x 70	145.83	1	GREEN	III	WHITE	IX	X	145.83		SEE PD-17
G83<CA>	AS-414	300 x 70	145.83	1	GREEN	III	WHITE	IX	X	145.83		SEE PD-20
G85<CA>	AS-143	264 x 70	128.33	1	GREEN	III	WHITE	IX	X		128.33	SEE PD-20
SHEET TOTAL										4,990.83	1,308.33	————

NOTES:

1. CALIFORNIA SIGN CODES ARE DESIGNATED BY <CA>. OTHERWISE, FEDERAL SIGN CODES ARE SHOWN.
2. DETAILED SIGN PANEL FABRICATION DRAWINGS SHOWING EXACT PANEL LAYOUTS WILL BE FURNISHED TO THE CONTRACTOR.
3. FOR "SIGN MESSAGE/DESCRIPTION" INFORMATION FOR THE OVERHEAD PANELS, SEE SIGN PLANS.

L = LENGTH OF SIGN
D = DEPTH OF SIGN

SIGN PANEL QUANTITIES

CONTRACTOR FURNISHED SIGNS

SQ-22

STATE OF CALIFORNIA - DEPARTMENT OF TRANSPORTATION
Caltrans
TRAFFIC

FUNCTIONAL SUPERVISOR: JOSEPH W. HORTON
CALCULATED-DESIGNED BY: JACK KEMMERLY
CHECKED BY: AC MURPHY
REVISED BY / DATE REVISED

LAST REVISION 3-8-10
DATE PLOTTED => 03-FEB-2011
TIME PLOTTED => 13:19

Dist	COUNTY	ROUTE	POST MILES TOTAL PROJECT	SHEET No.	TOTAL SHEETS
03	Yol,Sac	80	R10.9/R11.7, M0.0/M10.4	567	1012

REGISTERED CIVIL ENGINEER 6-14-10 DATE

9-7-10
PLANS APPROVAL DATE

REGISTERED PROFESSIONAL ENGINEER A.C. Murphy No. 47645 Exp. 12-31-11 CIVIL STATE OF CALIFORNIA

THE STATE OF CALIFORNIA OR ITS OFFICERS OR AGENTS SHALL NOT BE RESPONSIBLE FOR THE ACCURACY OR COMPLETENESS OF ELECTRONIC COPIES OF THIS PLAN SHEET.

OVERHEAD SIGN PANEL QUANTITIES (CONTRACTOR-FURNISHED), CONTINUED

SIGN CODE	OVERHEAD SIGN NUMBER (No.)	SIGN SIZE L X D (INCHES)	SIGN AREA (SQFT)	NUMBER OF SIGNS	BACKGROUND SHEETING COLOR	BACKGROUND RETROREFLECTIVE ASTM TYPE	LEGEND SHEETING COLOR	LEGEND RETROREFLECTIVE ASTM TYPE	PROTECTIVE OVERLAY PREMIUM	FURNISH LAMINATED PANEL SIGN (1"-TYPE A) SQFT	FURNISH FORMED PANEL SIGN (OVERHEAD) SQFT	REMARKS
G83-5<CA>	AS-144	192 x 90	120.00	1	GREEN	III	WHITE	IX	X	120.00		SEE PD-21
G78<CA>	AS-630	120 x 70	58.33	1	GREEN	III	WHITE	IX	X	58.33		SEE PD-21
G83-5<CA>	AS-145	192 x 90	120.00	1	GREEN	III	WHITE	IX	X	120.00		SEE PD-21
G78<CA>	AS-631	168 x 70	81.67	1	GREEN	III	WHITE	IX	X	81.67		SEE PD-21
G23<CA>	AS-644	252 x 100	175.00	1	GREEN	III	WHITE	IX	X	175.00		SEE PD-22
G85<CA>	AS-146	264 x 70	128.33	1	GREEN	III	WHITE	IX	X		128.33	SEE PD-22
G83<CA>	AS-628	192 x 100	133.33	1	GREEN	III	WHITE	IX	X	133.33		SEE PD-23
G23<CA>	AS-629	252 x 100	175.00	1	GREEN	III	WHITE	IX	X	175.00		SEE PD-23
G83<CA>	AS-645	228 x 100	158.33	1	GREEN	III	WHITE	IX	X	158.33		SEE PD-24
G85<CA>	AS-149	240 x 70	116.67	1	GREEN	III	WHITE	IX	X		116.67	SEE PD-25
G20-5<CA>	AS-642	144 x 80	80.00	1	GREEN	III	WHITE	IX	X	80.00		SEE PD-26
G78<CA>	AS-642	120 x 80	66.67	1	GREEN	III	WHITE	IX	X	66.67		SEE PD-26
G78<CA>	AS-639	144 x 70	70.00	1	GREEN	III	WHITE	IX	X	70.00		SEE PD-26
G83-5<CA>	AS-150	240 x 100	166.67	1	GREEN	III	WHITE	IX	X	166.67		SEE PD-26
G78<CA>	AS-637	120 x 70	58.33	1	GREEN	III	WHITE	IX	X	58.33		SEE PD-26
G20-5<CA>	AS-627	120 x 80	66.67	1	GREEN	III	WHITE	IX	X	66.67		SEE PD-26
G78<CA>	AS-627	144 x 80	80.00	1	GREEN	III	WHITE	IX	X	80.00		SEE PD-26
G83-5<CA>	AS-151	228 x 90	142.50	1	GREEN	III	WHITE	IX	X	142.50		SEE PD-26
G85<CA>	AS-152	240 x 70	116.67	1	GREEN	III	WHITE	IX	X		116.67	SEE PD-27
G23<CA>	AS-626	240 x 90	150.00	1	GREEN	III	WHITE	IX	X	150.00		SEE PD-29, FEBT
G23<CA>	AS-626	240 x 90	150.00	1	GREEN	III	WHITE	IX	X	150.00		SEE PD-29, FWBT
G85<CA>	AS-155	312 x 70	151.67	1	GREEN	III	WHITE	IX	X		151.67	SEE PD-31
G78<CA>	AS-641	144 x 70	70.00	1	GREEN	III	WHITE	IX	X	70.00		SEE PD-32
G78<CA>	AS-641	120 x 70	58.33	1	GREEN	III	WHITE	IX	X	58.33		SEE PD-32
G78<CA>	AS-636	168 x 70	81.67	1	GREEN	III	WHITE	IX	X	81.67		SEE PD-32
G83-5<CA>	AS-156	168 x 90	105.00	1	GREEN	III	WHITE	IX	X	105.00		SEE PD-32
G83-5<CA>	AS-157	192 x 90	120.00	1	GREEN	III	WHITE	IX	X	120.00		SEE PD-32
G78<CA>	AS-634	120 x 70	58.33	1	GREEN	III	WHITE	IX	X	58.33		SEE PD-32
G78<CA>	AS-625	120 x 70	58.33	1	GREEN	III	WHITE	IX	X	58.33		SEE PD-32
G78<CA>	AS-625	168 x 70	81.67	1	GREEN	III	WHITE	IX	X	81.67		SEE PD-32
G85<CA>	AS-158	312 x 70	151.67	1	GREEN	III	WHITE	IX	X		151.67	SEE PD-33
G23<CA>	AS-159	216 x 90	135.00	1	GREEN	III	WHITE	IX	X	135.00		SEE PD-34
G23<CA>	AS-160	240 x 90	150.00	1	GREEN	III	WHITE	IX	X	150.00		SEE PD-34
G85<CA>	AS-161	216 x 70	105.00	1	GREEN	III	WHITE	IX	X		105.00	SEE PD-35
G83<CA>	AS-212	264 x 100	183.33	1	GREEN	III	WHITE	IX	X		183.33	SEE PD-36
SHEET TOTAL										2,970.83	953.34	————

SIGN PANEL QUANTITIES

CONTRACTOR FURNISHED SIGNS

SQ-23

STATE OF CALIFORNIA - DEPARTMENT OF TRANSPORTATION
Caltrans
TRAFFIC

FUNCTIONAL SUPERVISOR: JOSEPH W. HORTON
CALCULATED-DESIGNED BY: JACK KEMMERLY
CHECKED BY: AC MURPHY
REVISED BY
DATE REVISED

LAST REVISION 6-3-10
DATE PLOTTED => 03-FEB-2011
TIME PLOTTED => 13:19

Dist	COUNTY	ROUTE	POST MILES TOTAL PROJECT	SHEET No.	TOTAL SHEETS
03	Yol,Sac	80	R10.9/R11.7, M0.0/M10.4	568	1012

REGISTERED CIVIL ENGINEER 6-14-10 DATE

9-7-10
PLANS APPROVAL DATE

REGISTERED PROFESSIONAL ENGINEER A.C. Murphy No. 47645 Exp. 12-31-11 CIVIL STATE OF CALIFORNIA

THE STATE OF CALIFORNIA OR ITS OFFICERS OR AGENTS SHALL NOT BE RESPONSIBLE FOR THE ACCURACY OR COMPLETENESS OF ELECTRONIC COPIES OF THIS PLAN SHEET.

OVERHEAD SIGN PANEL QUANTITIES (CONTRACTOR-FURNISHED), CONTINUED

SIGN CODE	OVERHEAD SIGN NUMBER (No.)	SIGN SIZE L X D (INCHES)	SIGN AREA (SQFT)	NUMBER OF SIGNS	BACKGROUND SHEETING COLOR	BACKGROUND RETROREFLECTIVE ASTM TYPE	LEGEND SHEETING COLOR	LEGEND RETROREFLECTIVE ASTM TYPE	PROTECTIVE OVERLAY PREMIUM	FURNISH LAMINATED PANEL SIGN (1"-TYPE A) SQFT	FURNISH FORMED PANEL SIGN (OVERHEAD) SQFT	REMARKS
G83<CA>	AS-213	240 x 70	116.67	1	GREEN	III	WHITE	IX	X	116.67		SEE PD-36
G83<CA>	AS-607	144 x 90	90.00	1	GREEN	III	WHITE	IX	X	90.00		SEE PD-36
G23<CA>	AS-623	216 x 100	150.00	1	GREEN	III	WHITE	IX	X	150.00		SEE PD-37
G85<CA>	AS-214	216 x 70	105.00	1	GREEN	III	WHITE	IX	X		105.00	SEE PD-37
G85<CA>	AS-220	228 x 70	110.83	1	GREEN	III	WHITE	IX	X	110.83		SEE PD-38
G23<CA>	AS-610	240 x 100	166.67	1	GREEN	III	WHITE	IX	X	166.67		SEE PD-38
G83-5<CA>	AS-215 (LEFT)	192 x 90	120.00	1	GREEN	III	WHITE	IX	X	120.00		SEE PD-39
G83-5<CA>	AS-215 (RIGHT)	156 x 90	97.50	1	GREEN	III	WHITE	IX	X	97.50		SEE PD-39
G83-5<CA>	AS-216	168 x 90	105.00	1	GREEN	III	WHITE	IX	X	105.00		SEE PD-39
G23<CA>	AS-624	216 x 100	150.00	1	GREEN	III	WHITE	IX	X	150.00		SEE PD-40
G83<CA>	AS-553	240 x 100	166.67	1	GREEN	III	WHITE	IX	X	166.67		SEE PD-40
R87-1<CA>	AS-608	192 x 100	133.33	1	BLACK WHITE	 III	WHITE BLACK	III 	X	133.33		SEE PD-43
G78<CA>	AS-643	144 x 70	70.00	1	GREEN	III	WHITE	IX	X	70.00		SEE PD-46
G78<CA>	AS-643	120 x 70	58.33	1	GREEN	III	WHITE	IX	X	58.33		SEE PD-46
SHEET TOTAL										1,535.00	105.00	_____
SHEET TOTAL FROM SQ-22										4,990.83	1,308.33	_____
SHEET TOTAL FROM SQ-23										2,970.83	953.34	_____
TOTAL										9,496.66	2,366.67	_____

SIGN PANEL QUANTITIES

CONTRACTOR FURNISHED SIGNS

SQ-24

REVISED BY | DATE REVISED

JACK KEMMERLY | AC MURPHY

CALCULATED-DESIGNED BY | CHECKED BY

FUNCTIONAL SUPERVISOR: JOSEPH W. HORTON

STATE OF CALIFORNIA - DEPARTMENT OF TRANSPORTATION

Caltrans

TRAFFIC

LAST REVISION 3-10-10 | DATE PLOTTED => 03-FEB-2011 | TIME PLOTTED => 13:19

Dist	COUNTY	ROUTE	POST MILES TOTAL PROJECT	SHEET No.	TOTAL SHEETS
03	Yol,Sac	80	R10.9/R11.7, M0.0/M10.4	569	1012

REGISTERED CIVIL ENGINEER 6-15-10 DATE

9-7-10
PLANS APPROVAL DATE

REGISTERED PROFESSIONAL ENGINEER A. Y. FONG No. 64343 Exp 6-30-11 CIVIL STATE OF CALIFORNIA

THE STATE OF CALIFORNIA OR ITS OFFICERS OR AGENTS SHALL NOT BE RESPONSIBLE FOR THE ACCURACY OR COMPLETENESS OF SCANNED COPIES OF THIS PLAN SHEET.

ROADWAY AND EARTHWORK QUANTITIES

PHASE	STAGE	LOCATION	STATION LIMITS	DIRECTION	JPCP	JPCP (RSC)	HMA (TYPE A)	CLASS 2 AGGREGATE BASE	REMOVE CONCRETE PAVEMENT AND BASE	EMBANKMENT (N)	ROADWAY EXCAVATION
					CY	CY	TON	CY	CY	CY	CY
1	1	MEDIAN	"A1" 239+50.0 TO "A1" 482+00.0	EASTBOUND	26,639.6		13,396.4				
		MEDIAN	"A1" 239+50.0 TO "A1" 482+00.0	WESTBOUND	26,536.7		13,344.6				
			"A1" 239+50.0 TO "A1" 482+00.0	EB/WB						10,095.0	25,862.0
	PHASE 1 STAGE 1 TOTAL				53,176.3	0.0	26,741.0	0.0	0.0	10,095.0	25,862.0
	1E	-	REGIONAL TRANSIT Temp ACCES Rd	-			232.0				115.0
	PHASE 1 STAGE 1E TOTAL						232.0				115.0
	2	MEDIAN	"A1" 550+00.0 TO "A1" 567+80.2	EASTBOUND	1,780.0		895.1				
		MEDIAN	"A1" 570+58.0 TO "A1" 654+50.0	EASTBOUND	8,384.6		4,216.4				
		MEDIAN	"A1" 550+00.0 TO "A1" 567+80.0	WESTBOUND	1,778.8		894.5				
		MEDIAN	"A1" 570+58.0 TO "A1" 654+50.0	WESTBOUND	8,399.3		4,223.8				
			"A1" 550+00.0 TO "A1" 654+50.0	EB/WB						2,431.0	14,691.0
	PHASE 1 STAGE 2 TOTAL				20,342.7	0.0	10,229.8	0.0	0.0	2,431.0	14,691.0
	3	WIDENING	"A2" 705+00.0 TO "A2" 738+36.6	EASTBOUND			5,294.3	3,684.8			
		RAMP	"S2" 711+50.0 TO "S2" 713+00.0	EASTBOUND			176.7	114.2			
		RAMP	"S2" 711+50.0 TO "S2" 713+86.0	EASTBOUND					157.3		
		RAMP	"S3" 720+50.0 TO "S3" 725+51.5	EASTBOUND			726.5	469.5			
			"A2" 704+97.0 TO "A2" 738+36.0	EASTBOUND						2,704.0	14,626.0
	PHASE 1 STAGE 3 TOTAL				0.0	0.0	6,197.5	4,268.5	157.3	2,704.0	14,626.0
	4	MEDIAN	"A1" 654+50.0 TO "A1" 677+26.0	EASTBOUND	2,279.7		1,146.4				
		MEDIAN	"A1" 679+32.0 TO "A2" 687+50.0	EASTBOUND	814.0		409.3				
		MEDIAN	"A1" 654+50.0 TO "A1" 677+26.0	WESTBOUND	2,264.9		1,139.0				
		MEDIAN	"A1" 679+32.0 TO "A3" 687+50.0	WESTBOUND	861.3		433.1				
		WIDENING	"A2" 702+09.5 TO "A2" 712+00.0	EASTBOUND			948.7	660.3			
		WIDENING	"A3" 703+41.0 TO "A3" 713+12.5	WESTBOUND			1,114.1	553.9			
			"A1" 654+50.0 TO "A3" 713+12.0	EB/WB						1,103.0	7,291.0
	PHASE 1 STAGE 4 TOTAL				6,219.9	0.0	5,190.6	1,214.2	0.0	1,103.0	7,291.0
	5	MEDIAN	"A1" 482+00.0 TO "A1" 494+90.0	EASTBOUND	1,289.6		648.5				
		MEDIAN	"A1" 503+31.0 TO "A1" 550+00.0	EASTBOUND	4,666.2		2,346.5				
		MEDIAN	"A1" 482+00.0 TO "A1" 494+90.0	WESTBOUND	1,289.7		648.6				
		MEDIAN	"A1" 503+31.0 TO "A1" 550+00.0	WESTBOUND	4,671.5		2,349.2				
			"A1" 482+00.0 TO "A1" 550+00.0	EB/WB						1,836.0	7,366.0
	PHASE 1 STAGE 5 TOTAL				11,917.0	0.0	5,992.8	0.0	0.0	1,836.0	7,366.0
2	1	#1 LANE	"A1" 479+00.0 TO "A1" 494+89.8	EASTBOUND	812.6		497.4		1,059.9		
		#1 LANE	"A1" 503+31.8 TO "A1" 547+85.0	EASTBOUND	2,276.1		1,393.4		2,968.8		
		#2 LANE	"A1" 239+22.5 TO "A1" 251+00.0	EASTBOUND		601.8	368.4		785.0		
		#2 LANE	"A1" 251+00.0 TO "A1" 275+80.0	EASTBOUND	1,267.6		776.0		1,653.3		
		#2 LANE	"A1" 275+80.0 TO "A1" 280+00.0	EASTBOUND		214.7	131.4		280.0		
		#2 LANE	"A1" 280+00.0 TO "A1" 291+00.0	EASTBOUND	562.2		344.2		733.3		
		#2 LANE	"A1" 291+00.0 TO "A1" 309+95.0	EASTBOUND		968.6	592.9		1,263.3		
		#2 LANE	"A1" 309+95.0 TO "A1" 329+56.0	EASTBOUND	1,002.3		613.6		1,307.3		
		#2 LANE	"A1" 329+56.0 TO "A1" 334+86.0	EASTBOUND		270.9	165.8		353.3		
		#2 LANE	"A1" 334+86.0 TO "A1" 359+50.0	EASTBOUND	1,259.4		771.0		1,642.7		
		#2 LANE	"A1" 359+50.0 TO "A1" 381+00.0	EASTBOUND		1,098.9	672.7		1,433.3		
PHASE 2 STAGE 1 SUBTOTAL (Q-1)					7,180.2	3,154.9	6,326.8		13,480.2		
TOTAL Q-1					98,836.1	3,154.9	60,910.5	5,482.7	13,637.5	18,169.0	69,951.0

(N) NOT A SEPARATE PAY ITEM, FOR INFORMATION ONLY.

SUMMARY OF QUANTITIES

Q-1

STATE OF CALIFORNIA - DEPARTMENT OF TRANSPORTATION
Caltrans®
NORTH REGION
OFFICE OF DESIGN SOUTH
DESIGN BRANCH S7

FUNCTIONAL SUPERVISOR: CYRUS HUI
CALCULATED-DESIGNED BY: A. RANDHAWA
CHECKED BY: A. FONG
REVISED BY
DATE REVISED

LAST REVISION 00-00-00
DATE PLOTTED => 03-FEB-2011
TIME PLOTTED => 13:19

Dist	COUNTY	ROUTE	POST MILES TOTAL PROJECT	SHEET No.	TOTAL SHEETS
03	Yol,Sac	80	R10.9/R11.7, M0.0/M10.4	570	1012

REGISTERED CIVIL ENGINEER 6-15-10 DATE

9-7-10
PLANS APPROVAL DATE

REGISTERED PROFESSIONAL ENGINEER A. Y. FONG No. 64343 Exp 6-30-11 CIVIL STATE OF CALIFORNIA

THE STATE OF CALIFORNIA OR ITS OFFICERS OR AGENTS SHALL NOT BE RESPONSIBLE FOR THE ACCURACY OR COMPLETENESS OF SCANNED COPIES OF THIS PLAN SHEET.

ROADWAY AND EARTHWORK QUANTITIES (CONTINUED)

PHASE	STAGE	LOCATION	STATION LIMITS	DIRECTION	JPCP	JPCP (RSC)	HMA (TYPE A)	CLASS 2 AGGREGATE BASE	REMOVE CONCRETE PAVEMENT AND BASE	EMBANKMENT (N)	ROADWAY EXCAVATION
					CY	CY	TON	CY	CY	CY	CY
2	1	#2 LANE	"A1" 381+00.0 TO "A1" 384+50.0	EASTBOUND		178.9	109.5		233.3		
		#2 LANE	"A1" 384+50.0 TO "A1" 400+15.0	EASTBOUND		799.9	489.7		1,043.3		
		#2 LANE	"A1" 400+15.0 TO "A1" 411+20.0	EASTBOUND	564.8		345.8		736.7		
		#2 LANE	"A1" 411+20.0 TO "A1" 437+52.0	EASTBOUND		1,345.2	823.6		1,754.7		
		#2 LANE	"A1" 437+52.0 TO "A1" 473+35.0	EASTBOUND	1,831.3		1,121.1		2,388.7		
		#2 LANE	"A1" 473+35.0 TO "A1" 489+00.0	EASTBOUND	799.9		489.7		1,043.3		
		#2 LANE	"A1" 489+00.0 TO "A1" 494+89.8	EASTBOUND	301.5		184.5		393.2		
		#2 LANE	"A1" 503+31.8 TO "A1" 547+85.0	EASTBOUND	2,276.1		1,393.4		2,968.8		
		#2 LANE	"A1" 547+85.0 TO "A1" 567+73.1	EASTBOUND	1,016.1		622.1		1,325.4		
		#2 LANE	"A1" 570+48.7 TO "A1" 677+26.4	EASTBOUND	5,457.5		3,341.1		7,118.5		
		#2 LANE	"A1" 679+32.1 TO "A1" 688+54.5	EASTBOUND		471.4	288.6		614.9		
		#3 LANE	"A1" 239+22.5 TO "A1" 251+00.0	EASTBOUND		702.1	429.8		785.0		
		#3 LANE	"A1" 251+00.0 TO "A1" 275+80.0	EASTBOUND	1,478.8		905.3		1,653.3		
		#3 LANE	"A1" 275+80.0 TO "A1" 280+00.0	EASTBOUND		250.4	153.3		280.0		
		#3 LANE	"A1" 280+00.0 TO "A1" 291+00.0	EASTBOUND	655.9		401.6		733.3		
		#3 LANE	"A1" 291+00.0 TO "A1" 309+95.0	EASTBOUND		968.6	592.9		1,263.3		
		#3 LANE	"A1" 309+95.0 TO "A1" 329+56.0	EASTBOUND	1,002.3		613.6		1,307.3		
		#3 LANE	"A1" 329+56.0 TO "A1" 334+86.0	EASTBOUND		270.9	165.8		353.3		
		#3 LANE	"A1" 334+86.0 TO "A1" 359+50.0	EASTBOUND	1,469.3		899.5		1,642.7		
		#3 LANE	"A1" 359+50.0 TO "A1" 381+00.0	EASTBOUND		1,282.0	784.9		1,433.3		
		#3,4 LANE	"A1" 381+00.0 TO "A1" 384+50.0	EASTBOUND	55.9	387.6	271.5		539.6		
		#3,4 LANE	"A1" 384+50.0 TO "A1" 400+00.0	EASTBOUND		1,716.5	1,061.0		2,066.7		
		#3 LANE	"A1" 400+00.0 TO "A1" 411+20.0	EASTBOUND	667.9		403.4		746.7		
		#3 LANE	"A1" 411+20.0 TO "A1" 437+52.0	EASTBOUND		1,345.2	823.6		1,754.7		
		#3 LANE	"A1" 437+52.0 TO "A1" 473+35.0	EASTBOUND	1,831.3		1,121.1		2,388.7		
		#3 LANE	"A1" 473+35.0 TO "A1" 489+00.0	EASTBOUND	933.2		571.3		1,043.3		
		#3 LANE	"A1" 489+00.0 TO "A1" 494+89.8	EASTBOUND	351.7		215.3		393.2		
		#3 LANE	"A1" 503+31.8 TO "A1" 547+85.0	EASTBOUND	2,655.4		1,625.6		2,968.8		
		#3 LANE	"A1" 547+85.0 TO "A1" 567+73.1	EASTBOUND	1,185.5		725.8		1,325.4		
		#3 LANE	"A1" 570+48.7 TO "A1" 677+26.4	EASTBOUND	6,367.1		3,897.9		7,118.5		
		#3 LANE	"A1" 679+32.1 TO "A1" 688+54.5	EASTBOUND		550.0	336.7		614.9		
		AUX LANE	"A1" 296+55.0 TO "A1" 333+22.5	EASTBOUND	2,186.9		1,338.8				
		Shld	"A1" 239+22.5 TO "A1" 276+16.5	EASTBOUND			1,645.7	818.2			
		Shld	"A1" 296+62.0 TO "A1" 308+79.6	EASTBOUND			1,247.5	620.2			
		Shld	"A1" 308+79.6 TO "A1" 332+22.5	EASTBOUND			1,092.0	542.9			
		Shld	"A1" 337+22.5 TO "A1" 359+50.0	EASTBOUND			995.7	495.0			
		Shld	"A1" 381+00.0 TO "A1" 393+30.0	EASTBOUND			549.8	273.3			
		Shld	"A1" 402+17.0 TO "A1" 409+42.0	EASTBOUND			324.1	161.1			
		Shld	"A1" 473+35.0 TO "A1" 479+45.0	EASTBOUND			272.7	135.6			
		Shld	"A1" 515+50.0 TO "A1" 528+12.0	EASTBOUND			564.1	280.4			
		Shld	"A1" 534+05.0 TO "A1" 542+40.0	EASTBOUND			373.2	185.6			
		RAMP	"A1" 296+62.0 TO "A1" 308+79.6	EASTBOUND			1,247.5	620.2			
			"A1" 239+22.5 TO "A1" 542+40.0	EASTBOUND						3,642.0	9,057.0
PHASE 2 STAGE 1 SUBTOTAL (Q-2)					33,088.4	10,268.7	34,860.1	4,132.5	50,032.8	3,642.0	9,057.0
PHASE 2 STAGE 1 TOTAL					40,268.6	13,423.6	41,186.9	4,132.5	63,513.0	3,642.0	9,057.0
TOTAL Q-2					33,088.4	10,268.7	34,860.1	4,132.5	50,032.8	3,642.0	9,057.0

(N) NOT A SEPARATE PAY ITEM, FOR INFORMATION ONLY.

SUMMARY OF QUANTITIES

Q-2

STATE OF CALIFORNIA - DEPARTMENT OF TRANSPORTATION
Caltrans®
NORTH REGION
OFFICE OF DESIGN SOUTH
DESIGN BRANCH S7

FUNCTIONAL SUPERVISOR: CYRUS HUI
CALCULATED-DESIGNED BY: A. RANDHAWA
CHECKED BY: A. FONG
REVISED BY
DATE REVISED

LAST REVISION 00-00-00 | DATE PLOTTED => 03-FEB-2011 | TIME PLOTTED => 13:20

Dist	COUNTY	ROUTE	POST MILES TOTAL PROJECT	SHEET No.	TOTAL SHEETS
03	Yol, Sac	80	R10.9/R11.7, M0.0/M10.4	571	1012

REGISTERED CIVIL ENGINEER 6-15-10 DATE

9-7-10
PLANS APPROVAL DATE

REGISTERED PROFESSIONAL ENGINEER A. Y. FONG No. 64343 Exp 6-30-11 CIVIL STATE OF CALIFORNIA

THE STATE OF CALIFORNIA OR ITS OFFICERS OR AGENTS SHALL NOT BE RESPONSIBLE FOR THE ACCURACY OR COMPLETENESS OF SCANNED COPIES OF THIS PLAN SHEET.

ROADWAY AND EARTHWORK QUANTITIES (CONTINUED)

PHASE	STAGE	LOCATION	STATION LIMITS	DIRECTION	JPCP	JPCP (RSC)	HMA (TYPE A)	CLASS 2 AGGREGATE BASE	REMOVE CONCRETE PAVEMENT AND BASE	EMBANKMENT (N)	ROADWAY EXCAVATION
					CY	CY	TON	CY	CY	CY	CY
		#1 LANE	"A1" 483+12.0 TO "A1" 494+89.8	WESTBOUND	602.0		368.5		785.2		
		#1 LANE	"A1" 503+31.8 TO "A1" 550+12.0	WESTBOUND	2,392.1		1,464.4		3,120.1		
		#2 LANE	"A1" 239+22.5 TO "A1" 251+00.0	WESTBOUND		601.8	368.4		785.0		
		#2 LANE	"A1" 251+00.0 TO "A1" 271+40.0	WESTBOUND	1,042.7		638.3		1,360.0		
		#2 LANE	"A1" 271+40.0 TO "A1" 291+00.0	WESTBOUND		1,001.8	613.3		1,306.7		
		#2 LANE	"A1" 291+00.0 TO "A1" 303+25.0	WESTBOUND	626.1		383.3		816.7		
		#2 LANE	"A1" 303+25.0 TO "A1" 308+00.0	WESTBOUND		242.8	148.6		316.7		
		#2 LANE	"A1" 308+00.0 TO "A1" 334+00.0	WESTBOUND	1,328.9		813.5		1,733.3		
		#2 LANE	"A1" 334+00.0 TO "A1" 337+90.0	WESTBOUND		199.3	122.0		260.0		
		#2 LANE	"A1" 337+90.0 TO "A1" 356+50.0	WESTBOUND		950.7	582.0		1,240.0		
		#2 LANE	"A1" 356+50.0 TO "A1" 371+40.0	WESTBOUND	761.6		466.2		993.3		
		#2 LANE	"A1" 371+40.0 TO "A1" 374+50.0	WESTBOUND	158.4		97.0		206.7		
		#2 LANE	"A1" 374+50.0 TO "A1" 378+00.0	WESTBOUND		178.9	109.5		233.3		
		#2 LANE	"A1" 378+00.0 TO "A1" 381+50.0	WESTBOUND		178.9	109.5		233.3		
		#2 LANE	"A1" 381+50.0 TO "A1" 388+50.0	WESTBOUND	357.8		219.0		466.7		
		#2 LANE	"A1" 388+50.0 TO "A1" 398+50.0	WESTBOUND		511.1	312.9		666.7		
		#2 LANE	"A1" 398+50.0 TO "A1" 403+25.0	WESTBOUND	242.8		148.6		316.7		
		#2 LANE	"A1" 403+25.0 TO "A1" 413+00.0	WESTBOUND		498.3	305.1		650.0		
		#2 LANE	"A1" 413+00.0 TO "A1" 414+95.0	WESTBOUND	99.7		61.0		130.0		
		#2 LANE	"A1" 414+95.0 TO "A1" 425+30.0	WESTBOUND	529.0		323.9		690.0		
		#2 LANE	"A1" 425+30.0 TO "A1" 427+00.0	WESTBOUND	86.9		53.2		113.3		
3	1	#2 LANE	"A1" 427+00.0 TO "A1" 432+00.0	WESTBOUND		255.6	156.5		333.3		
		#2 LANE	"A1" 432+00.0 TO "A1" 475+75.0	WESTBOUND	2,236.1		1,368.9		2,916.7		
		#2 LANE	"A1" 475+75.0 TO "A1" 481+67.0	WESTBOUND	302.6		185.2		394.7		
		#2 LANE	"A1" 481+67.0 TO "A1" 494+89.8	WESTBOUND	676.1		413.9		881.9		
		#2 LANE	"A1" 503+31.8 TO "A1" 550+12.0	WESTBOUND	2,392.1		1,464.4		3,120.1		
		#2 LANE	"A1" 550+12.0 TO "A1" 567+85.7	WESTBOUND	906.6		555.0		1,182.5		
		#2 LANE	"A1" 570+67.3 TO "A1" 677+26.4	WESTBOUND	5,448.0		3,335.2		7,106.1		
		#2 LANE	"A1" 679+32.1 TO "A1" 689+39.8	WESTBOUND		515.0	315.3		671.8		
		#3 LANE	"A1" 239+22.5 TO "A1" 251+00.0	WESTBOUND		702.1	429.8		785.0		
		#3 LANE	"A1" 251+00.0 TO "A1" 271+40.0	WESTBOUND	1,216.4		744.7		1,360.0		
		#3 LANE	"A1" 271+40.0 TO "A1" 291+00.0	WESTBOUND		1,168.7	715.5		1,306.7		
		#3 LANE	"A1" 291+00.0 TO "A1" 303+25.0	WESTBOUND	730.5		447.2		816.7		
		#3 LANE	"A1" 303+25.0 TO "A1" 308+00.0	WESTBOUND		242.8	148.6		316.7		
		#3 LANE	"A1" 308+00.0 TO "A1" 334+00.0	WESTBOUND	1,328.9		813.5		1,733.3		
		#3 LANE	"A1" 334+00.0 TO "A1" 337+90.0	WESTBOUND		199.3	122.0		260.0		
		#3 LANE	"A1" 337+90.0 TO "A1" 356+50.0	WESTBOUND		1,109.1	679.0		1,240.0		
		#3 LANE	"A1" 356+50.0 TO "A1" 371+40.0	WESTBOUND	888.5		543.9		993.3		
		#3 LANE	"A1" 371+40.0 TO "A1" 374+50.0	WESTBOUND	158.4		97.0		206.7		
		#3 LANE	"A1" 374+50.0 TO "A1" 378+00.0	WESTBOUND	6.4	178.9	113.4		241.7		
		#3,4 LANE	"A1" 378+00.0 TO "A1" 381+50.0	WESTBOUND		387.6	237.3		466.7		
		#3,4 LANE	"A1" 381+50.0 TO "A1" 388+50.0	WESTBOUND	775.2		474.6		933.3		
PHASE 3 STAGE 1 SUBTOTAL (Q-3)					25,293.8	9,122.7	21,069.1	0.0	43,690.9	0.0	0.0
TOTAL Q-3					25,293.8	9,122.7	21,069.1	0.0	43,690.9	0.0	0.0

(N) NOT A SEPARATE PAY ITEM, FOR INFORMATION ONLY.

SUMMARY OF QUANTITIES

Q-3

STATE OF CALIFORNIA - DEPARTMENT OF TRANSPORTATION
Caltrans
NORTH REGION
OFFICE OF DESIGN SOUTH
DESIGN BRANCH S7

FUNCTIONAL SUPERVISOR: CYRUS HUI
CALCULATED-DESIGNED BY: A. RANDHAWA
CHECKED BY: A. FONG
REVISED BY
DATE REVISED

LAST REVISION 00-00-00
DATE PLOTTED => 03-FEB-2011
TIME PLOTTED => 13:20

Dist	COUNTY	ROUTE	POST MILES TOTAL PROJECT	SHEET No.	TOTAL SHEETS
03	Yol, Sac	80	R10.9/R11.7, M0.0/M10.4	572	1012

REGISTERED CIVIL ENGINEER 6-15-10 DATE

9-7-10
PLANS APPROVAL DATE

REGISTERED PROFESSIONAL ENGINEER A. Y. FONG No. 64343 Exp 6-30-11 CIVIL STATE OF CALIFORNIA

THE STATE OF CALIFORNIA OR ITS OFFICERS OR AGENTS SHALL NOT BE RESPONSIBLE FOR THE ACCURACY OR COMPLETENESS OF SCANNED COPIES OF THIS PLAN SHEET.

ROADWAY AND EARTHWORK QUANTITIES (CONTINUED)

PHASE	STAGE	LOCATION	STATION LIMITS	DIRECTION	JPCP	JPCP (RSC)	HMA (TYPE A)	CLASS 2 AGGREGATE BASE	REMOVE CONCRETE PAVEMENT AND BASE	EMBANKMENT (N)	ROADWAY EXCAVATION
					CY	CY	TON	CY	CY	CY	CY
3	1	#3 LANE	"A1" 388+50.0 TO "A1" 398+50.0	WESTBOUND		1,107.4	678.0		1,333.3		
		#3 LANE	"A1" 398+50.0 TO "A1" 403+25.0	WESTBOUND	242.8		148.6		316.7		
		#3 LANE	"A1" 403+25.0 TO "A1" 413+00.0	WESTBOUND		498.3	305.1		650.0		
		#3 LANE	"A1" 413+00.0 TO "A1" 414+95.0	WESTBOUND	99.7		61.0		130.0		
		#3 LANE	"A1" 414+95.0 TO "A1" 425+30.0	WESTBOUND	617.2		377.8		690.0		
		#3 LANE	"A1" 425+30.0 TO "A1" 427+00.0	WESTBOUND	86.9		53.2		113.3		
		#3 LANE	"A1" 427+00.0 TO "A1" 432+00.0	WESTBOUND		255.6	156.5		333.3		
		#3 LANE	"A1" 432+00.0 TO "A1" 475+75.0	WESTBOUND	2,220.8		1,359.6		2,896.7		
		#3 LANE	"A1" 475+75.0 TO "A1" 481+67.0	WESTBOUND	370.9		227.1		414.7		
		#3 LANE	"A1" 481+67.0 TO "A1" 494+89.8	WESTBOUND	788.8		482.9		881.9		
		#3 LANE	"A1" 503+31.8 TO "A1" 550+12.0	WESTBOUND	2,790.8		1,708.5		3,120.1		
		#3 LANE	"A1" 550+12.0 TO "A1" 567+85.7	WESTBOUND	1,057.7		647.5		1,182.5		
		#3 LANE	"A1" 570+67.3 TO "A1" 677+26.4	WESTBOUND	6,356.0		3,891.1		7,106.1		
		#3 LANE	"A1" 679+32.1 TO "A1" 689+39.8	WESTBOUND		600.9	367.9		671.8		
		AUX LANE	"A1" 304+25.0 TO "A1" 337+90.0	WESTBOUND	2,006.5		1,228.4				
		Shld	"A1" 239+22.5 TO "A1" 271+25.5	WESTBOUND			1,426.3	709.1			
		Shld	"A1" 304+25.0 TO "A1" 337+90.0	WESTBOUND			1,504.2	747.8			
		Shld	"A1" 359+00.0 TO "A1" 371+40.0	WESTBOUND			554.3	275.6			
		Shld	"A1" 414+95.0 TO "A1" 425+30.0	WESTBOUND			462.6	230.0			
		Shld	"A1" 486+47.0 TO "A1" 492+93.0	WESTBOUND			288.8	143.6			
		Shld	"A1" 515+50.0 TO "A1" 522+84.0	WESTBOUND			328.1	163.1			
		Shld	"A1" 536+32.0 TO "A1" 542+40.0	WESTBOUND			271.8	135.1			
			"A1" 239+22.5 TO "A1" 542+40.0	WESTBOUND						3,642.0	9,057.0
PHASE 3 STAGE 1 SUBTOTAL (Q-4)					16,638.1	2,462.2	16,529.3	2,404.3	19,840.4	3,642.0	9,057.0
PHASE 3 STAGE 1 TOTAL					41,931.9	11,584.9	37,598.4	2,404.3	63,531.3	3,642.0	9,057.0
SUBTOTAL SHEET Q-1					98,836.1	3,154.9	60,910.5	5,482.7	13,637.5	18,169.0	69,951.0
SUBTOTAL SHEET Q-2					33,088.4	10,268.7	34,860.1	4,132.5	50,032.8	3,642.0	9,057.0
SUBTOTAL SHEET Q-3					25,293.8	9,122.7	21,069.1	0.0	43,690.9	0.0	0.0
TOTAL					173,856.4	25,008.5	133,369.0	12,019.5	127,201.6	25,453.0	88,065.0

(N) NOT A SEPARATE PAY ITEM, FOR INFORMATION ONLY.

HOT MIX ASPHALT (HMA) SUMMARY

DESCRIPTION	TON
HMA DIKE (FROM Q-8)	348.8
OVERSIDE DRAIN (FROM Q-8)	10.0
HMA (TYPE A) (FROM Q-4)	133,369.0
TOTAL	133,727.8

REVISED BY | DATE REVISED
A. RANDHAWA | A. FONG
CALCULATED-DESIGNED BY | CHECKED BY
FUNCTIONAL SUPERVISOR
CYRUS HUI

STATE OF CALIFORNIA - DEPARTMENT OF TRANSPORTATION
Caltrans
NORTH REGION
OFFICE OF DESIGN SOUTH
DESIGN BRANCH S7

SUMMARY OF QUANTITIES

Q-4

LAST REVISION 00-00-00 | DATE PLOTTED => 03-FEB-2011 | TIME PLOTTED => 13:20

Dist	COUNTY	ROUTE	POST MILES TOTAL PROJECT	SHEET No.	TOTAL SHEETS
03	Yol,Sac	80	R10.9/R11.7, M0.0/M10.4	573	1012

REGISTERED CIVIL ENGINEER 6-15-10 DATE

9-7-10
PLANS APPROVAL DATE

REGISTERED PROFESSIONAL ENGINEER A. Y. FONG No. 64343 Exp 6-30-11 CIVIL STATE OF CALIFORNIA

THE STATE OF CALIFORNIA OR ITS OFFICERS OR AGENTS SHALL NOT BE RESPONSIBLE FOR THE ACCURACY OR COMPLETENESS OF SCANNED COPIES OF THIS PLAN SHEET.

RUBBERIZED HMA (OPEN GRADED)

STATION LIMITS	RUBBERIZED HMA (OPEN GRADED)
	TON
"A1" 479+45.0 TO "A1" 494+89.8 R†	854
"A1" 483+12.0 TO "A1" 494+89.8 L†	606
"A1" 503+31.8 TO "A1" 547+85.0 R†	2,179
"A1" 503+31.8 TO "A1" 550+12.0 L†	2,355
"A2" 702+09.5 TO "A2" 738+41.2	1,041
"A3" 703+40.0 TO "A3" 713+12.0	203
TOTAL	7,238

COLD PLANE ASPHALT CONCRETE PAVEMENT

STATION LIMITS	COLD PLANE ASPHALT CONCRETE PAVEMENT	
	0.1′ Max	0.25′ Max
	SQYD	SQYD
"A2" 703+86.0 TO "A2" 728+41.2	15,519	
"A3" 707+82.0 TO "A3" 728+87.5	12,565	
"B2" 298+00.0 TO "B2" 298+50.0		130
"S3" 720+25.0 TO "S3" 720+50.0		142
SUBTOTAL	28,084	272
TOTAL	28,356	

HMA TEXTURED PAVING

LOCATION	HMA TEXTURED PAVING
	SQYD
WEST EL CAMINO Ave EB ON RAMP	74
TOTAL	74

REPLACE CONCRETE PAVEMENT (RAPID STRENGTH CONCRETE)

STATION LIMITS	LOCATION	CY
"A1" 239+22.5 TO "A1" 483+12.0	L†	7,600
"A1" 550+12.0 TO "A2" 689+40.0	L†	
"A1" 239+27.5 TO "A1" 479+00.0	R†	
"A1" 547+85.0 TO "A3" 688+54.5	R†	
TOTAL		7,600

METAL BEAM GUARD RAILING (WOOD POST) & VEGETATION CONTROL

STATION & LOCATION	(N) FLARE TYPE	METAL BEAM GUARD RAILING (WOOD POST)	TERMINAL ANCHOR ASSEMBLY (TYPE SFT)	(N) BURIED POST ANCHOR	ALTERNATIVE FLARED TERMINAL SYSTEM	ALTERNATIVE IN LINE TERMINAL SYSTEM	TRANSITION RAILING (TYPE WB)	TRANSITION RAILING (TYPE DTB)	VEGETATION CONTROL (MIINOR CONCRETE)
	TYPE	LF	EA	EA	EA	EA	EA	EA	SQYD
"A1" 239+22.5 L† TO "A1" 250+47.5 L†	12B	1,125.0				1		1	488.0
"A1" 239+22.5 R† TO "A1" 249+85.0 R†	12DD	1,062.5	1						441.9
"A1" 304+38.5 L† TO "A1" 304+76.0 L†	16A	37.5	1			1			35.7
"A1" 308+41.5 R† TO "A1" 308+79.0 R†	16A	37.5	1			1			35.7
"A1" 335+88.5 L† TO "A1" 336+26.0 L†	16B	37.5	1			1			35.7
"A1" 333+08.5 R† TO "A1" 333+46.0 R†	16A	37.5	1			1			35.7
"A1" 375+34.0 L† TO "A1" 375+71.5 L†	16A	37.5	1			1			35.7
"A1" 392+87.5 L† TO "A1" 393+25.0 L†	16B	37.5	1		1				48.8
"A1" 395+19.0 R† TO "A1" 395+56.5 R†	16B	37.5	1		1				48.8
"A1" 429+38.5 L† TO "A1" 429+76.0 L†	16B	37.5	1		1				48.8
"A1" 486+81.3 L† TO "A1" 494+99.8 L†	12DD	948.0	1				1		394.2
"A1" 488+34.9 R† TO "A1" 494+99.8 R†	12B	668.0			1		1		311.0
"A1" 503+21.8 L† TO "A1" 516+50.5 L†	12B	1,328.7			1		1		585.8
"A1" 503+21.8 R† TO "A1" 517+00.0 R†	12DD	1,378.2	1				1		573.1
"A1" 521+88.0 L† TO "A1" 522+25.5 L†	12A	37.5	1			1			35.7
"A1" 556+55.0 L† TO "A1" 567+97.2 L†	12DD	1,142.2	1				1		475.0
"A1" 556+97.0 R† TO "A1" 567+83.0 R†	12A	1,086.0				1	1		471.8
"A1" 570+58.5 L† TO "A1" 580+85.2 L†	12B	1,026.7			1		1		460.2
"A1" 570+37.6 R† TO "A1" 580+55.0 R†	12DD	1,017.4	1				1		423.1
"A1" 674+38.2 L† TO "A1" 677+36.40 L†	12DD	298.2	1				1		124.0
"A1" 674+01.5 R† TO "A1" 677+36.8 R†	12B	334.9			1		1		172.5
"A1" 679+22.1 L† TO "A3" 683+44.7 L†	12A	423.6				1	1		208.9
"A1" 679+22.1 R† TO "A2" 683+70.8 R†	12DD	449.7	1				1		186.6
"W1" 19+81.0 L† TO "W1" 21+65.0 L†	16B	150.0	1		1				95.6
"A3" 698+50.0 R† TO "A3" 700+74.0 L†	16B	178.0	1		1				107.2
"S3" 720+98.0 R† TO "S3" 722+00.0 R†	12A	225.0					1		128.8
"A2" 718+22.3 R† TO "A2" 718+47.0 R†	16C	37.5		1	1		1		0
"A2" 733+71.5 R† TO "A2" 734+09.0 R†	16B	37.5	1		1				48.8
TOTAL		13,254.6	19	1	11	9	14	1	6,057.1

(N) NOT A SEPARATE PAY ITEM, FOR INFORMATION ONLY.

GRIND AND GROOVE EXISTING CONCRETE PAVEMENT

STATION LIMITS	LOCATION	GRIND EXISTING CONCRETE PAVEMENT	GROOVE EXISTING CONCRETE PAVEMENT
		SQYD	SQYD
"A1" 239+22.5 TO "A1" 479+00.0	R†	31,970	31,970
"A1" 547+85.0 TO "A1" 567+73.1	R†	2,651	2,651
"A1" 570+78.7 TO "A1" 677+26.4	R†	14,197	14,197
"A1" 679+32.1 TO "A2" 688+54.5	R†	1,230	1,230
"A1" 239+22.5 TO "A1" 483+12.0	L†	32,519	32,519
"A1" 550+12.0 TO "A1" 567+85.7	L†	2,365	2,365
"A1" 570+67.3 TO "A1" 677+26.4	L†	14,212	14,212
"A1" 679+32.1 TO "A3" 688+54.5	L†	1,344	1,344
TOTAL		100,488	100,488

PAINT PAVEMENT MARKING

LOCATION	SQFT
REGIONAL TRANSIT PARKING LOT	733
TOTAL	733

SEE PAVEMEMT DELINEATION QUANTITIES FOR TOTAL

SUMMARY OF QUANTITIES

Q-5

REVISED BY	A. RANDHAWA
DATE REVISED	
CALCULATED-DESIGNED BY	A. FONG
CHECKED BY	
FUNCTIONAL SUPERVISOR	CYRUS HUI

STATE OF CALIFORNIA - DEPARTMENT OF TRANSPORTATION
Caltrans
NORTH REGION
OFFICE OF DESIGN SOUTH
DESIGN BRANCH S7

LAST REVISION 00-00-00 | DATE PLOTTED => 03-FEB-2011 | TIME PLOTTED => 13:20

Dist	COUNTY	ROUTE	POST MILES TOTAL PROJECT	SHEET No.	TOTAL SHEETS
03	Yol, Sac	80	R10.9/R11.7, M0.0/M10.4	574	1012

REGISTERED CIVIL ENGINEER 6-15-10 DATE

9-7-10
PLANS APPROVAL DATE

REGISTERED PROFESSIONAL ENGINEER A. Y. FONG No. 64343 Exp 6-30-11 CIVIL STATE OF CALIFORNIA

THE STATE OF CALIFORNIA OR ITS OFFICERS OR AGENTS SHALL NOT BE RESPONSIBLE FOR THE ACCURACY OR COMPLETENESS OF SCANNED COPIES OF THIS PLAN SHEET.

CONCRETE BARRIER

STATION LIMITS	LOCATION	TYPE 60	TYPE 60C	TYPE 60E	TYPE 60E Mod	TYPE 60G
		LF	LF	LF	LF	LF
"A1" 243+27.0 TO "A1" 244+40.0	MEDIAN	113.0				
"A1" 244+40.0 TO "A1" 245+40.0	MEDIAN			100.0		
"A1" 245+40.0 TO "A1" 275+50.0	MEDIAN	3,010.0				
"A1" 275+50.0 TO "A1" 278+00.0	MEDIAN		250.0			
"A1" 278+00.0 TO "A1" 290+88.0	MEDIAN	1,288.0				
"A1" 290+88.0 TO "A1" 292+22.0	MEDIAN				134.0	
"A1" 292+22.0 TO "A1" 297+00.0	MEDIAN	478.0				
"A1" 297+00.0 TO "A1" 299+50.0	MEDIAN		250.0			
"A1" 299+50.0 TO "A1" 308+17.0	MEDIAN	867.0				
"A1" 308+17.0 TO "A1" 309+43.0	MEDIAN			126.0		
"A1" 309+43.0 TO "A1" 318+87.0	MEDIAN	944.0				
"A1" 318+87.0 TO "A1" 320+13.0	MEDIAN			126.0		
"A1" 320+13.0 TO "A1" 330+87.0	MEDIAN	1,074.0				
"A1" 330+87.0 TO "A1" 332+13.0	MEDIAN			126.0		
"A1" 332+13.0 TO "A1" 332+77.0	MEDIAN		64.0			
"A1" 332+77.0 TO "A1" 334+03.0	MEDIAN			126.0		
"A1" 334+03.0 TO "A1" 349+29.0	MEDIAN	1,526.0				
"A1" 349+29.0 TO "A1" 350+20.0	MEDIAN				91.0	
"A1" 350+20.0 TO "A1" 353+22.0	MEDIAN	302.0				
"A1" 353+22.0 TO "A1" 356+33.0	MEDIAN				311.0	
"A1" 356+33.0 TO "A1" 368+50.0	MEDIAN	1,217.0				
"A1" 368+50.0 TO "A1" 370+50.0	MEDIAN		200.0			
"A1" 370+50.0 TO "A1" 372+04.0	MEDIAN				154.0	
"A1" 372+04.0 TO "A1" 374+77.0	MEDIAN	273.0				
"A1" 374+77.0 TO "A1" 376+03.0	MEDIAN			126.0		
"A1" 376+03.0 TO "A1" 392+41.0	MEDIAN	1,638.0				
"A1" 392+41.0 TO "A1" 393+59.0	MEDIAN			118.0		
"A1" 393+59.0 TO "A1" 411+11.0	MEDIAN	1,752.0				
"A1" 411+11.0 TO "A1" 413+21.0	MEDIAN				210.0	
"A1" 413+21.0 TO "A1" 434+00.0	MEDIAN	2,079.0				
"A1" 434+00.0 TO "A1" 454+60.0	MEDIAN		2,060.0			
"A1" 454+60.0 TO "A1" 455+13.0	MEDIAN			53.0		
"A1" 455+13.0 TO "A1" 460+00.0	MEDIAN		487.0			
"A1" 460+00.0 TO "A1" 481+94.0	MEDIAN	2,194.0				
"A1" 481+94.0 TO "A1" 483+70.0	MEDIAN				176.0	
"A1" 483+70.0 TO "A1" 495+19.8	MEDIAN	1,149.8				
"A1" 503+01.8 TO "A1" 542+05.0	MEDIAN					3,903.2
"A1" 542+05.0 TO "A1" 543+53.0	MEDIAN				148.0	
SHEET Q-6 SUBTOTAL		19,904.8	3,311.0	901.0	1224.0	3,903.2

SUMMARY OF QUANTITIES

Q-6

STATE OF CALIFORNIA - DEPARTMENT OF TRANSPORTATION
Caltrans
NORTH REGION
OFFICE OF DESIGN SOUTH
DESIGN BRANCH S7

FUNCTIONAL SUPERVISOR: CYRUS HUI
CALCULATED-DESIGNED BY: A. RANDHAWA
CHECKED BY: A. FONG
REVISED BY
DATE REVISED

LAST REVISION 00-00-00
DATE PLOTTED => 03-FEB-2011
TIME PLOTTED => 13:20

Dist	COUNTY	ROUTE	POST MILES TOTAL PROJECT	SHEET No.	TOTAL SHEETS
03	Yol, Sac	80	R10.9/R11.7, M0.0/M10.4	575	1012

REGISTERED CIVIL ENGINEER 6-15-10 DATE

9-7-10
PLANS APPROVAL DATE

REGISTERED PROFESSIONAL ENGINEER A. Y. FONG No. 64343 Exp 6-30-11 CIVIL STATE OF CALIFORNIA

THE STATE OF CALIFORNIA OR ITS OFFICERS OR AGENTS SHALL NOT BE RESPONSIBLE FOR THE ACCURACY OR COMPLETENESS OF SCANNED COPIES OF THIS PLAN SHEET.

CONCRETE BARRIER (CONTINUED)

STATION LIMITS	LOCATION	TYPE 60	TYPE 60C	TYPE 60E	TYPE 60E Mod	TYPE 60G
		LF	LF	LF	LF	LF
"A1" 543+53.0 TO "A1" 568+10.2	MEDIAN	2,457.2				
"A1" 570+27.7 TO "A1" 571+00.0	MEDIAN		72.3			
"A1" 571+00.0 TO "A1" 583+43.0	MEDIAN	1,243.0				
"A1" 583+43.0 TO "A1" 584+57.0	MEDIAN			114.0		
"A1" 584+57.0 TO "A1" 595+56.0	MEDIAN	1,099.0		1,099.0		
"A1" 595+56.0 TO "A1" 596+92.0	MEDIAN				136.0	
"A1" 596+92.0 TO "A1" 622+20.0	MEDIAN	2,528.0				
"A1" 622+20.0 TO "A1" 623+71.0	MEDIAN				151.0	
"A1" 623+71.0 TO "A1" 638+50.0	MEDIAN	1,479.0				
"A1" 638+50.0 TO "A1" 640+50.0	MEDIAN		200.0			
"A1" 640+50.0 TO "A1" 644+36.0	MEDIAN	386.0				
"A1" 644+36.0 TO "A1" 646+61.0	MEDIAN				225.0	
"A1" 646+61.0 TO "A1" 652+40.0	MEDIAN	579.0				
"A1" 652+40.0 TO "A1" 654+14.0	MEDIAN				174.0	
"A1" 654+14.0 TO "A1" 676+00.0	MEDIAN	2,186.0				
"A1" 676+00.0 TO "A1" 677+00.0	MEDIAN		100.0			
"A1" 677+00.0 TO "A1" 677+56.4	MEDIAN	56.4				
"A1" 679+02.1 TO "A1" 689+24.3	MEDIAN/L†	1022.2				
"A2" 701+95.2 TO "A2" 712+01.0	L†	1,021.5				
"A2" 704+79.5 TO "A2" 712+00.0	R†	705.0				
"A2" 712+00.0 TO "A2" 713+00.0	R†		100.0			
"A2" 718+47.0 TO "A2" 720+36.4	R†					
"A2" 720+36.4 TO "S3" 725+37.3	R†	500.9				
"S3" 720+00.0 TO "A3" 725+37.3	R†	537.3				
"A3" 703+10.0 TO "A3" 713+12.0	R†	1002.0				
	SUBTOTAL	16,802.5	472.3	1,213.0	686.0	0.0
	SHEET Q-6 SUBTOTAL	19,904.8	3,311.0	901.0	1,224.0	3,903.2
	TOTAL	36,707.3	3,783.3	2,114.0	1,910.0	3,903.2

MINOR CONCRETE (MINOR STRUCTURE)

LOCATION	MINOR CONCRETE (MINOR STRUCTURE)
	CY
SACRAMENTO RIVER BOH	1.6
NATOMAS EAST CANNAL BOH	3.2
RIO LINDA Blvd UC	3.2
WINTERS St UC	2.8
FROM DRAINAGE PLANS	379.8
TOTAL	390.6

6" PLASTIC PIPE

LOCATION	PLASTIC PIPE
	LF
"A2" 720+36.0 R†	8
TOTAL	8

CHAIN LINK FENCE (TYPE CL-6)

STATION LIMITS	LOCATION	LENGTH
	L†/R†	LF
"A1" 502+36.7 TO "A1" 502+45.0	L†/R†	148
"A1" 568+50.6 TO "A1" 568+57.7	L†/R†	149
"A2" 689+76.0 TO "A3" 690+52.0	L†/R†	124
	SUBTOTAL	421
	FROM SOUNDWALL QUANTITIES	15
	TOTAL	436

REMOVE CONCRETE

LOCATION	REMOVE CONCRETE
	CY
SACRAMENTO RIVER BOH	0.8
NATOMAS EAST CANNAL BOH	1.6
RIO LINDA Blvd UC	1.6
WINTERS St UC	1.6
LONGVIEW Dr OFF RAMP	6.0
TOTAL	11.6

REMOVE CONCRETE CURB

LOCATION	REMOVE CONCRETE CURB
	LF
FROM SOUNDWALL PLAN	850
"A3" 701+43.3 TO "A3" 702+12.5	64
TOTAL	914

REMOVE FENCE

STATION LIMITS	LOCATION	LENGTH
	L†/R†	LF
"A1" 495+24.2 TO "A1" 495+25.7	L†/R†	43
"A1" 502+36.7 TO "A1" 502+45.0	L†/R†	148
"A1" 568+50.6 TO "A1" 568+57.7	L†/R†	149
"A1" 570+23.7 TO "A1" 570+31.7	L†/R†	45
"A1" 677+57.5 TO "A1" 677+57.5	L†/R†	44
"A1" 679+01.0 TO "A1" 679+01.0	L†/R†	44
"A2" 689+76.0 TO "A3" 690+52.0	L†/R†	124
	SUBTOTAL	597
	FROM SOUNDWALL QUANTITIES	13,023
	TOTAL	13,620

TEMPORARY FENCE (TYPE ESA)

STATION LIMITS	LOCATION	LENGTH
		LF
"A1" 329+48.0 TO "A1" 331+38.0	R†	198.00
"A1" 330+78.0 TO "A1" 332+53.0	L†	182.00
"A1" 415+20.0 TO "A1" 415+70.0	L†	157.00
"A1" 482+49.0 TO "A1" 487+18.5	R†	1,599.00
"A1" 495+60.0 TO "A1" 496+18.3	L†	149.00
"A1" 495+59.4 TO "A1" 496+18.3	R†	323.00
"A1" 496+78.34	R†	317.00
"A1" 496+78.34 TO "A1" 499+32.0	L†	1,110.00
	TOTAL	4,035.00

SUMMARY OF QUANTITIES

Q-7

REVISED BY | DATE REVISED
A. RANDHAWA | A. FONG
CALCULATED-DESIGNED BY | CHECKED BY
FUNCTIONAL SUPERVISOR: CYRUS HUI

STATE OF CALIFORNIA - DEPARTMENT OF TRANSPORTATION
Caltrans
NORTH REGION
OFFICE OF DESIGN SOUTH
DESIGN BRANCH S7

LAST REVISION 00-00-00 | DATE PLOTTED => 03-FEB-2011 | TIME PLOTTED => 13:20

Dist	COUNTY	ROUTE	POST MILES TOTAL PROJECT	SHEET No.	TOTAL SHEETS
03	Yol,Sac	80	R10.9/R11.7, M0.0/M10.4	576	1012

REGISTERED CIVIL ENGINEER 6-15-10 DATE

9-7-10
PLANS APPROVAL DATE

REGISTERED PROFESSIONAL ENGINEER A. Y. FONG No. 64343 Exp 6-30-11 CIVIL STATE OF CALIFORNIA

THE STATE OF CALIFORNIA OR ITS OFFICERS OR AGENTS SHALL NOT BE RESPONSIBLE FOR THE ACCURACY OR COMPLETENESS OF SCANNED COPIES OF THIS PLAN SHEET.

TACK COAT

LOCATION	STATION LIMITS	DIRECTION	TACK COAT
			TON
Shld	"A1" 239+22.5 TO "A1" 542+40.0	WB/EB	9.9
#1 LANE	"A1" 483+12.0 TO "A1" 550+12.0	WB	1.6
#1 LANE	"A1" 479+00.0 TO "A1" 547+85.0	EB	13.7
#2 LANE	"A1" 239+22.5 TO "A3" 689+39.8	WB	12.1
#2 LANE	"A1" 239+22.5 TO "A2" 688+54.5	EB	12.1
#3 LANE	"A1" 239+22.5 TO "A3" 689+39.8	WB	14.2
#3 LANE	"A1" 239+22.5 TO "A2" 688+54.5	EB	14.2
AUXI	"A1" 304+25.0 TO "A1" 337+90.0	WB	1.1
AUXI	"A1" 296+55.0 TO "A1" 333+22.5	EB	1.2
MEDIAN	"A1" 239+22.5 TO "A3" 689+69.8	WB	28.6
MEDIAN	"A1" 239+22.5 TO "A2" 689+24.3	EB	28.7
OVERLAYS	"A1" 239+22.5 TO "A2" 738+41.2	WB/EB	39.2
"A2" WIDENING	"A2" 702+10.0 TO "A2" 738+41.2	EB	6.5
"A2" WIDENING	"A3" 703+40.0 TO "A3" 728+87.5	WB	0.9
		TOTAL	172.0

PLACE HMA DIKE

STATION LIMITS	TYPE A	TYPE C	TYPE E	TYPE F	HMA
	LF	LF	LF	LF	TON
"A1" 239+22.5 TO "A1" 250+47.2 L+				1,124.7	14.9
"A1" 239+22.5 TO "A1" 249+85.0 R+				1,062.5	14.1
"A1" 249+85.0 TO "A1" 254+00.0 R+			415.0		10.9
"A1" 250+47.5 TO "A1" 251+22.5 L+		75.0			0.6
"A1" 251+22.5 TO "A1" 254+00.0 L+			277.5		7.3
"A1" 298+49.3 TO "A1" 303+24.7 R+			475.4		12.4
"A1" 304+25.0 TO "A1" 304+88.5 L+				63.5	0.8
"A1" 304+88.5 TO "A1" 305+63.5 L+		75.0			0.6
"A1" 305+37.7 TO "A1" 307+66.5 R+			228.8		6.0
"A1" 305+63.5 TO "A1" 310+00.0 L+			436.5		11.4
"A1" 307+66.5 TO "A1" 308+41.5 R+				50.0	0.6
"A1" 308+41.5 TO "A1" 308+91.5 R+		75.0			0.7
"A1" 308+91.5 TO "A1" 310+00.0 R+			108.5		2.8
"A1" 310+13.0 TO "A1" 315+00.0 L+			487.0		12.7
"A1" 310+13.0 TO "A1" 315+00.0 R+			487.0		12.7
"A1" 315+13.0 TO "A1" 320+00.0 L+			487.0		12.7
"A1" 315+13.0 TO "A1" 320+24.7 R+			511.7		13.4
"A1" 320+13.0 TO "A1" 330+00.0 L+			987.0		25.8
"A1" 320+37.1 TO "A1" 328+90.0 R+			852.9		22.3
"A1" 329+03.0 TO "A1" 332+33.5 R+			330.5		8.6
"A1" 330+13.0 TO "A1" 335+88.5 L+			575.5		15.0
"A1" 332+33.5 TO "A1" 333+08.5 R+		75.0			0.6
"A1" 333+08.5 TO "A1" 333+22.5 R+				14.0	0.2
"A1" 335+88.5 TO "A1" 336+38.5 L+				50.0	0.7
"A1" 336+38.5 TO "A1" 337+13.5 L+		75.0			0.6
"A1" 337+13.5 TO "A1" 337+90.0 L+			76.5		2.0
"A1" 515+50.0 TO "A1" 516+50.5 L+				100.5	1.3
"A1" 515+50.0 TO "A1" 517+00.0 R+				150.0	2.0
"A1" 516+50.5 TO "A1" 517+13.0 L+		62.5			0.5
"A1" 517+13.0 TO "A1" 521+88.0 L+			475.0		12.4
"A1" 517+00.0 TO "A1" 528+12.0 R+			1,112.0		29.1
"A1" 521+88.0 TO "A1" 522+84.0 L+		96.0			0.7
"A1" 534+05.0 TO "A1" 542+30.0 R+			825.0		21.6
"A1" 536+32.0 TO "A1" 542+20.0 L+			588.0		15.4
"S2" 709+50.0 TO "S2" 712+00.0 R+			250.0		6.5
"S3" 720+50.0 TO "A2" 738+41.2 R+			1,791.2		46.8
REGIONAL TRANSIT	80.0				2.0
TOTAL	80.0	533.5	11,778.0	2,615.2	348.8*

* SEE Q-4 FOR TOTAL

MINOR CONCRETE (MISCELLANEOUS CONSTRUCTION)

STATION LIMITS	CURB TYPE A1-6	CURB TYPE A3-6	GUTTER	SLOPE
	CY	CY	CY	CY
"A2" 688+43.4 TO "A2" 688+56.8	0.4			
"A2" 720+36.4 TO "A2" 725+00.0			15	
"A3" 701+43.3 TO "A3" 702+12.5		0.7		
"S3" 722+00.0 TO "S3" 725+46.7				91.3
TOTAL	107.4			

RELOCATE GATE

STATION LIMITS	RELOCATE GATE
	EA
"A3" 695+50.0	1
TOTAL	1

LIQUID ASPHALT (PRIME COAT)

STATION LIMITS	DIRECTION	LIQUID ASPHALT (PRIME COAT)
		TON
"A1" 239+22.5 TO "A1" 240+22.5	WB	0.1
"A1" 240+22.5 TO "A1" 271+25.5	WB	2.8
"A1" 304+25.0 TO "A1" 337+90.0	WB	3.1
"A1" 359+00.0 TO "A1" 371+40.0	WB	1.1
"A1" 414+95.0 TO "A1" 425+30.0	WB	0.9
"A1" 486+47.0 TO "A1" 492+93.0	WB	0.6
"A1" 515+50.0 TO "A1" 522+84.0	WB	0.7
"A1" 536+32.0 TO "A1" 542+40.0	WB	0.6
"A1" 239+22.5 TO "A1" 240+22.5	EB	0.1
"A1" 240+22.5 TO "A1" 276+16.5	EB	3.3
"A1" 296+55.0 TO "A1" 303+76.2	EB	0.6
"A1" 298+49.3 TO "A1" 303+76.2	EB	1.2
"A1" 303+76.2 TO "A1" 308+80.0	EB	0.8
"A1" 308+79.6 TO "A1" 332+22.5	EB	2.2
"A1" 337+22.5 TO "A1" 359+50.0	EB	2.0
"A1" 381+00.0 TO "A1" 393+30.0	EB	1.1
"A1" 402+17.0 TO "A1" 409+42.0	EB	0.7
"A1" 473+35.0 TO "A1" 479+45.0	EB	0.6
"A1" 515+50.0 TO "A1" 528+12.0	EB	1.2
"A1" 534+05.0 TO "A1" 542+40.0	EB	0.8
"A2" 702+09.5 TO "A2" 712+00.0	EB	1.9
"A2" 704+00.0 TO "A2" 738+36.6	EB	11.1
"S2" 711+50.0 TO "S2" 713+00.0	EB	0.5
"S2" 711+50.0 TO "S2" 713+00.0	EB	0.3
"S2" 711+50.0 TO "S2" 713+86.0	EB	0.3
"S3" 720+50.0 TO "S3" 725+50.0	EB	2.2
"S3" 703+41.0 TO "S3" 713+12.5	EB	2.3
TOTAL		43.1

PLACE HMA (Misc AREA)

DESCRIPTION	SQYD	TON
HMA OVERSIDE DRAINS	59.3	10.0**

** SEE Q-4 FOR TOTAL

EROSION CONTROL (HYDROSEED)

LOCATION	AREA
	ACRE
AREA 1	0.03
AREA 2	0.08
AREA 3	2.30
AREA 4	2.12
AREA 5	0.13
AREA 6	0.01
AREA 7	0.16
AREA 8	0.40
AREA 9	0.05
AREA 10	0.12
AREA 11	0.36
TOTAL	5.76

TEMPORARY WATER POLLUTION CONTROL

ITEM DESCRIPTION	QTY	UNIT
TEMPORARY FIBER ROLL	24,834	LF
TEMPORARY SILT FENCE	43,314	LF
TEMPORARY GRAVEL BAG BERM	3,065	LF
TEMPORARY CONSTRUCTION ENTRANCE	56	EA
TEMPORARY COVER	24,200	SQYD
TEMPORARY CHECK DAM	277	LF
TEMPORARY DRAINAGE INLET PROTECTION	178	EA
TEMPORARY EROSION CONTROL BLANKET	161,100	SQYD
TEMPORARY SOIL BINDER	20,600	SQYD

SUMMARY OF QUANTITIES

Q-8

STATE OF CALIFORNIA - DEPARTMENT OF TRANSPORTATION
Caltrans®
NORTH REGION
OFFICE OF DESIGN SOUTH
DESIGN BRANCH S7

FUNCTIONAL SUPERVISOR: CYRUS HUI
CALCULATED-DESIGNED BY: A. RANDHAWA
CHECKED BY: A. FONG
REVISED BY
DATE REVISED

LAST REVISION 00-00-00 DATE PLOTTED => 03-FEB-2011 TIME PLOTTED => 13:21

Dist	COUNTY	ROUTE	POST MILES TOTAL PROJECT	SHEET No.	TOTAL SHEETS
03	Yol,Sac	80	R10.9/R11.7, M0.0/M10.4	577	1012

REGISTERED CIVIL ENGINEER 6-15-10 DATE

9-7-10
PLANS APPROVAL DATE

REGISTERED PROFESSIONAL ENGINEER A. Y. FONG No. 64343 Exp 6-30-11 CIVIL STATE OF CALIFORNIA

THE STATE OF CALIFORNIA OR ITS OFFICERS OR AGENTS SHALL NOT BE RESPONSIBLE FOR THE ACCURACY OR COMPLETENESS OF SCANNED COPIES OF THIS PLAN SHEET.

DOUBLE THRIE BEAM BARRIER (WOOD POST)

STATION & LOCATION	LF
"A1" 239+22.5 TO "A1" 243+28.0 MEDIAN	405.5

REMOVE CONCRETE BARRIER

STATION LIMITS	LOCATION	LF
"A2" 701+79.5 TO "A2" 712+01.0	L+	1,021.5
"A3" 703+10.0 TO "A3" 713+12.0	R+	1002.0
TOTAL		2023.5

REMOVE METAL BEAM GUARD RAILING

STATION	LOCATION	LF
"A1" 239+22.5 TO "A1" 249+95.0	L+	1,072.5
"A1" 239+22.5 TO "A1" 249+85.0	R+	1,062.5
"A1" 307+98.0 TO "A1" 308+66.0	R+	68.0
"A1" 332+60.0 TO "A1" 333+38.0	R+	78.0
"A1" 375+12.8 TO "A1" 376+02.6	L+	89.8
"A1" 393+36.9 TO "A1" 394+13.7	L+	76.8
"A1" 395+15.3 TO "A1" 395+91.5	R+	76.2
"A1" 429+28.8 TO "A1" 430+05.6	L+	76.8
"A1" 486+81.2 TO "A1" 494+99.8	L+	818.6
"A1" 487+99.1 TO "A1" 494+99.8	R+	700.7
"A1" 503+21.8 TO "A1" 516+90.0	L+	1,368.2
"A1" 503+21.8 TO "A1" 517+00.0	R+	1,378.2
"A1" 556+92.5 TO "A1" 567+97.2	L+	1,104.7
"A1" 556+47.0 TO "A1" 567+83.0	R+	1,136.0
"A1" 570+58.5 TO "A1" 581+22.4	L+	1,063.9
"A1" 570+37.6 TO "A1" 580+55.0	R+	1,017.4
"A1" 674+38.2 TO "A1" 677+36.4	L+	298.2
"A1" 673+62.0 TO "A1" 677+36.4	R+	374.4
"A1" 679+22.1 TO "A3" 683+82.2	L+	460.1
"A1" 679+22.1 TO "A2" 683+70.8	R+	448.7
"W1" 20+21.0 TO "W1" 21+65.0	L+	144.0
"A3" 698+72.0 TO "A3" 700+06.0	L+	134.0
"A2" 704+92.0 TO "A2" 712+76.0	R+	784.0
TOTAL		13,831.7

REMOVE TREE

LOCATION	LS	DESCRIPTION
VARIOUS	1	REMOVE VARIOUS TREES
TOTAL	1	

REMOVE DOUBLE THRIE BEAM BARRIER

STATION LIMITS	LOCATION	LF
"A1" 239+96.0 TO "A1" 290+00.0	L+	5,004
"A1" 293+00.0 TO "A1" 318+66.0	L+	2,566
"A1" 321+29.0 TO "A1" 331+95.0	L+	1,066
"A1" 334+58.0 TO "A1" 349+22.0	L+	1,464
"A1" 357+00.0 TO "A1" 369+90.0	L+	1,290
"A1" 376+20.0 TO "A1" 392+27.0	R+	1,607
"A1" 394+59.0 TO "A1" 411+11.0	L+	1,652
"A1" 413+21.0 TO "A1" 453+56.0	L+	4,035
"A1" 456+19.0 TO "A1" 481+48.0	L+	2,529
"A1" 484+48.4 TO "A1" 494+29.0	L+	980.6
"A1" 503+14.0 TO "A1" 541+84.0	L+	3,870
"A1" 543+74.0 TO "A1" 567+93.0	L+	2,419
"A1" 570+51.4 TO "A1" 595+29.0	R+	2,477.6
"A1" 597+26.0 TO "A1" 621+97.0	L+	2,471
"A1" 624+10.0 TO "A1" 644+40.0	L+	2,030
"A1" 647+03.0 TO "A1" 652+00.0	R+	497
"A1" 654+18.0 TO "A1" 677+36.4	L+	2,318.4
"A1" 679+22.1 TO "A1" 688+92.7	R+	970.6
	TOTAL	39,247.2

REMOVE SINGLE THRIE BEAM BARRIER

STATION LIMITS	LOCATION	LF
"A1" 239+22.5 TO "A1" 239+96.0	L+	73.5
"A1" 290+00.0 TO "A1" 293+00.0	L+	300
"A1" 318+66.0 TO "A1" 321+29.0	L+	263
"A1" 331+95.0 TO "A1" 334+58.0	L+	263
"A1" 349+22.0 TO "A1" 357+00.0	L+	778
"A1" 369+90.0 TO "A1" 376+20.0	L+	630
"A1" 392+27.0 TO "A1" 394+59.0	R+	232
"A1" 411+11.0 TO "A1" 413+21.0	L+	210
"A1" 453+56.0 TO "A1" 456+19.0	L+	263
"A1" 481+48.0 TO "A1" 484+48.4	L+	300.4
"A1" 494+29.0 TO "A1" 494+98.8	R+	70.8
"A1" 541+84.0 TO "A1" 543+74.0	L+	190
"A1" 595+29.0 TO "A1" 597+26.0	L+	197
"A1" 621+97.0 TO "A1" 624+10.0	L+	213
"A1" 644+40.0 TO "A1" 647+03.0	L+	263
"A1" 652+00.0 TO "A1" 654+18.0	L+	218
	TOTAL	4,464.7

CRASH CUSHION

STATION	LOCATION	REMOVE CRASH CUSHION	CRASH CUSHION MODULE, SAND FILLED	ARRAY
		EA	EA	(N)
"A2" 704+51.0	R+	1		
"A2" 705+17.0	R+		21	U21
TOTAL		1	21	

(N) - NOT A SEPARATE PAY ITEM, FOR INFORMATION ONLY

IMPORTED MATERIAL (SHOULDER BACKING)

STATION LIMITS	LOCATION	TON
"A1" 240+22.5 TO 276+16.5	R+	588.7
"A1" 337+22.5 TO 359+50	R+	364.9
"A1" 281+00 TO 393+30	R+	201.5
"A1" 402+17 TO 409+42	R+	118.8
"A1" 473+35 TO 479+45	R+	99.9
"A1" 515+50 TO 528+12	R+	206.7
"A1" 534+05 TO 542+40	R+	136.8
"A1" 240+22.5 TO 271+25.5	L+	508.3
"A1" 359+00 TO 371+40	L+	203.1
"A1" 414+95 TO 425+30	L+	169.5
"A1" 486+47 TO 492+93	L+	105.8
"A1" 515+50 TO 522+84	L+	120.2
"A1" 536+32 TO 542+40	L+	99.6
	TOTAL	2,923.8

CONTOUR GRADING

LOCATION	SQYD
DEL PASO PARK OVERHEAD	359.1

JOINTS SUMMARY

LOCATION	LENGTH
	LF
SEAL PAVEMENT JOINT	87,330
SEAL LONGITUDINAL ISOLATION JOINT	150,077

SUMMARY OF QUANTITIES

Q-9

STATE OF CALIFORNIA - DEPARTMENT OF TRANSPORTATION
Caltrans
NORTH REGION
OFFICE OF DESIGN SOUTH
DESIGN BRANCH S7

FUNCTIONAL SUPERVISOR: CYRUS HUI
CALCULATED-DESIGNED BY: A. RANDHAWA
CHECKED BY: A. FONG
REVISED BY
DATE REVISED

LAST REVISION 00-00-00
DATE PLOTTED => 03-FEB-2011
TIME PLOTTED => 13:21

Dist	COUNTY	ROUTE	POST MILES TOTAL PROJECT	SHEET No.	TOTAL SHEETS
03	Yol, Sac	80	R10.9/R11.7, M0.0/M10.4	578	1012

REGISTERED CIVIL ENGINEER 6-15-10 DATE

9-7-10
PLANS APPROVAL DATE

REGISTERED PROFESSIONAL ENGINEER A. Y. FONG No. 64343 Exp 6-30-11 CIVIL STATE OF CALIFORNIA

THE STATE OF CALIFORNIA OR ITS OFFICERS OR AGENTS SHALL NOT BE RESPONSIBLE FOR THE ACCURACY OR COMPLETENESS OF SCANNED COPIES OF THIS PLAN SHEET.

EXTEND IRRIGATION CROSSOVERS

LOCATION		SIDE	EXTEND CONDUIT SIZE 6"	(N) CB	(N) OL	(N) SPRINKLER CONTROL CROSSOVER
LINE	STATION		LENGTH (LF)			SIZE (INCH)
"A1"	360+00	MEDIAN	52	X	X	
"A1"	491+00	MEDIAN	46	X	X	
"A1"	511+00	MEDIAN	46	X	X	2
"A1"	534+00	MEDIAN	46	X	X	
"A1"	540+00	MEDIAN	46	X	X	
"A1"	546+00	MEDIAN	46	X	X	
		TOTAL	282			

(N) - NOT A SEPARATE PAY ITEM, FOR INFORMATION ONLY
X - DENOTES REQUIREMENT
CB - COUPLING BAND
OL - OVERLAP

4" CONDUIT

LOCATION	LF
REGIONAL TRANSIT GATE FOUNDATION TO CONTROLLER CABINET	40
TOTAL	40

REMOVE PAVEMENT

LOCATION	CY
REGIONAL TRANSIT TEMPORARY ACCESS ROAD	114
TOTAL	114

SUMMARY OF QUANTITIES

Q-10

REVISED BY | DATE REVISED
A. RANDHAWA | A. FONG
CALCULATED-DESIGNED BY | CHECKED BY
FUNCTIONAL SUPERVISOR
CYRUS HUI

STATE OF CALIFORNIA - DEPARTMENT OF TRANSPORTATION
Caltrans®
NORTH REGION
OFFICE OF DESIGN SOUTH
DESIGN BRANCH S7

LAST REVISION 00-00-00 | DATE PLOTTED => 03-FEB-2011 TIME PLOTTED => 13:21

Dist	COUNTY	ROUTE	POST MILES TOTAL PROJECT	SHEET No.	TOTAL SHEETS
03	Yol,Sac	80	R10.9/R11.7, M0.0/M10.4	579	1012

REGISTERED CIVIL ENGINEER — DATE 6-15-10

9-7-10
PLANS APPROVAL DATE

REGISTERED PROFESSIONAL ENGINEER — A. Y. FONG — No. 64343 — Exp 6-30-11 — CIVIL — STATE OF CALIFORNIA

THE STATE OF CALIFORNIA OR ITS OFFICERS OR AGENTS SHALL NOT BE RESPONSIBLE FOR THE ACCURACY OR COMPLETENESS OF SCANNED COPIES OF THIS PLAN SHEET.

LEGEND

PG&E	PACIFIC GAS AND ELECTRIC
SMUD	SACRAMENTO MUNICIPAL UTILITY DISTRICT
TCE	TEMPORARY CONSTRUCTION EASEMENT
LOL	LAYOUT LINE
SW	SOUND WALL
H	DESIGN HEIGHT

NOTES:

1. FOR MASONRY BLOCK PATTERNS, SEE SOUND WALL AESTHETICS SHEETS.
2. FOR FENCE CONNECTION, SEE SOUND WALL DETAIL SHEETS.
3. FOR CORE HOLE DETAILS, SEE STANDARD PLAN H4.
4. SOUND WALL HEIGHT (H) BASED ON NOMINAL BLOCK DIMENSIONS.
5. FOR MASONRY BLOCK SOUND WALL TYPICAL SECTION, SEE MASONRY BLOCK ON PILE CAP DETAIL SHEETS.
6. FOR MASONRY BLOCK SOUND WALL SCUPPER OPENING AND CULVERT OPENING DETAILS, SEE SOUND WALL DETAIL SHEET.
7. FOR AESTHETIC DETAILS, SEE SOUND WALL DETAIL SHEETS.
8. FOR ANGLE POINT DETAIL, SEE SOUND WALL DETAIL SHEETS.
9. UTILITIES SHOWN ARE ASSUMED ELEVATION AND LOCATION. TO BE VERIFIED BY CONTRACTOR.
10. RECONSTRUCT PROPERTY SIDE FENCE AFTER CONSTRUCTION OF SOUND WALL, SEE SOUND WALL DETAIL SHEETS.

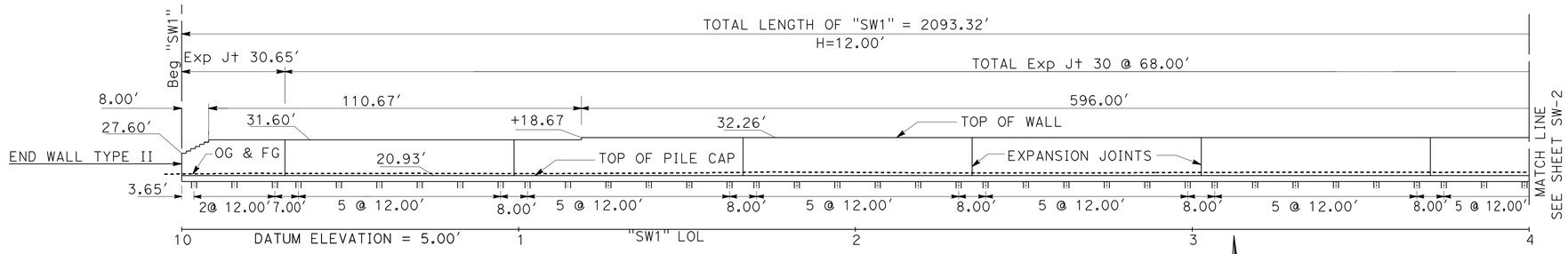

ELEVATION

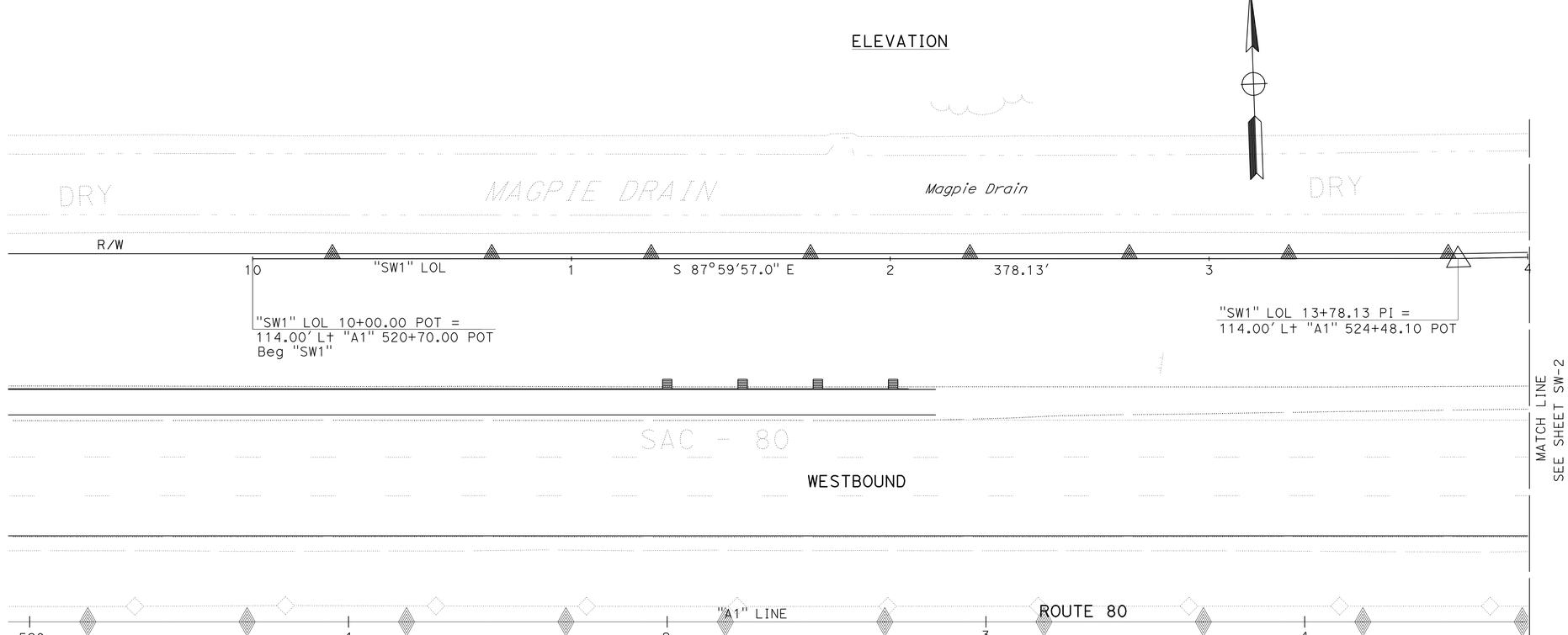

PLAN

SOUND WALL PLAN

SOUND WALL No. 1

SCALE: 1" = 20'

SW-1

THIS PLAN ACCURATE FOR SOUND WALL WORK ONLY.

STATE OF CALIFORNIA - DEPARTMENT OF TRANSPORTATION
NORTH REGION
OFFICE OF DESIGN SOUTH
DESIGN BRANCH S7

FUNCTIONAL SUPERVISOR: CYRUS HUI
CALCULATED-DESIGNED BY: A.S.RANDHAWA
CHECKED BY: AMY FONG
REVISED BY
DATE REVISED

LAST REVISION 00-00-00
DATE PLOTTED => 04-FEB-2011
TIME PLOTTED => 08:21

Dist	COUNTY	ROUTE	POST MILES TOTAL PROJECT	SHEET No.	TOTAL SHEETS
03	Yol,Sac	80	R10.9/R11.7, M0.0/M10.4	580	1012

REGISTERED CIVIL ENGINEER 6-15-10 DATE

9-7-10
PLANS APPROVAL DATE

REGISTERED PROFESSIONAL ENGINEER
A. Y. FONG
No. 64343
Exp 6-30-11
CIVIL
STATE OF CALIFORNIA

THE STATE OF CALIFORNIA OR ITS OFFICERS OR AGENTS SHALL NOT BE RESPONSIBLE FOR THE ACCURACY OR COMPLETENESS OF SCANNED COPIES OF THIS PLAN SHEET.

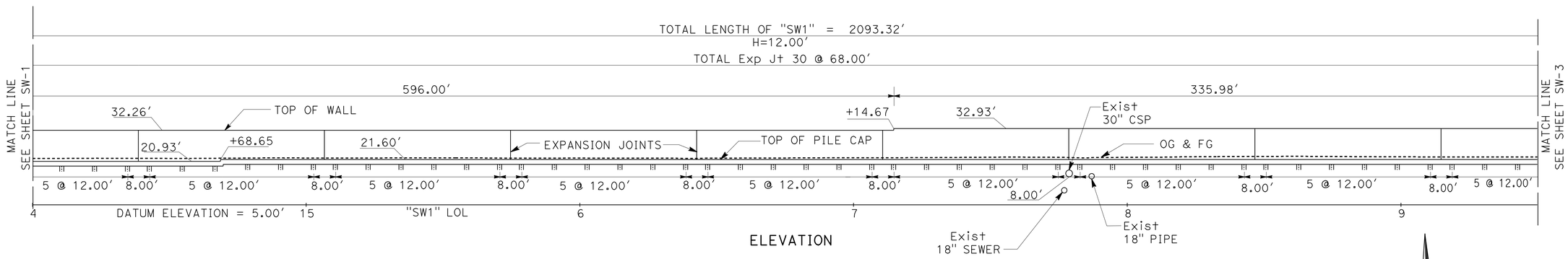

ELEVATION

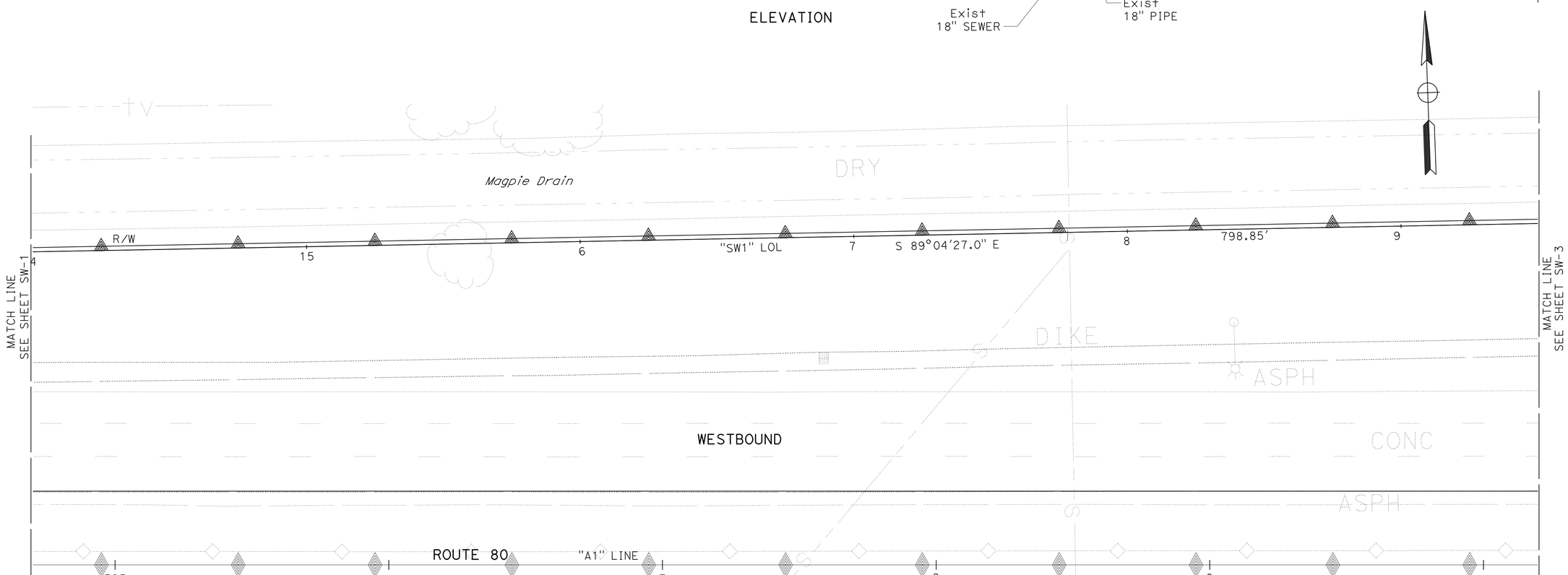

PLAN

SOUND WALL PLAN

SOUND WALL No. 1

SCALE: 1" = 20'

SW-2

THIS PLAN ACCURATE FOR SOUND WALL WORK ONLY.

REVISED BY	DATE REVISED

A.S.RANDHAWA — AMY FONG — CALCULATED-DESIGNED BY — CHECKED BY

FUNCTIONAL SUPERVISOR: CYRUS HUI

STATE OF CALIFORNIA - DEPARTMENT OF TRANSPORTATION
Caltrans
NORTH REGION
OFFICE OF DESIGN SOUTH
DESIGN BRANCH S7

LAST REVISION 00-00-00 | DATE PLOTTED => 04-FEB-2011 | TIME PLOTTED => 08:18

Dist	COUNTY	ROUTE	POST MILES TOTAL PROJECT	SHEET No.	TOTAL SHEETS
03	Yol,Sac	80	R10.9/R11.7, M0.0/M10.4	581	1012

REGISTERED CIVIL ENGINEER 6-15-10 DATE

9-7-10
PLANS APPROVAL DATE

REGISTERED PROFESSIONAL ENGINEER
A. Y. FONG
No. 64343
Exp 6-30-11
CIVIL
STATE OF CALIFORNIA

THE STATE OF CALIFORNIA OR ITS OFFICERS OR AGENTS SHALL NOT BE RESPONSIBLE FOR THE ACCURACY OR COMPLETENESS OF SCANNED COPIES OF THIS PLAN SHEET.

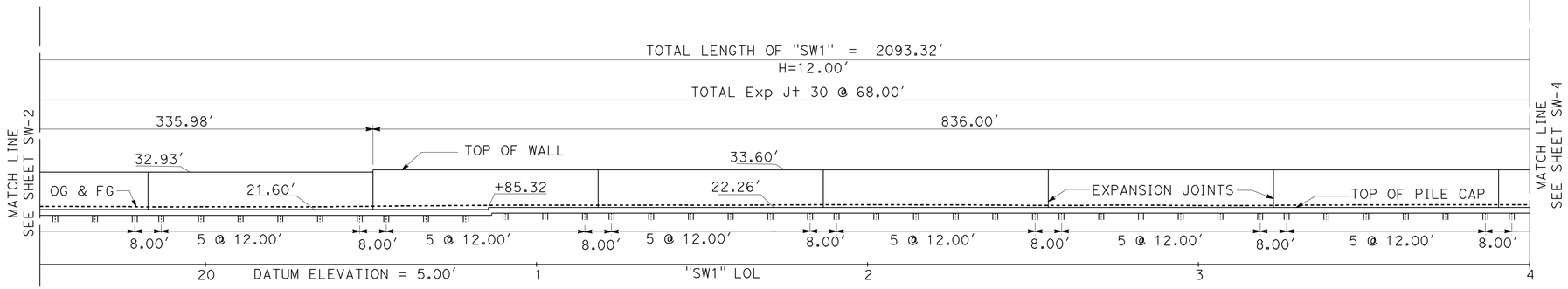

ELEVATION

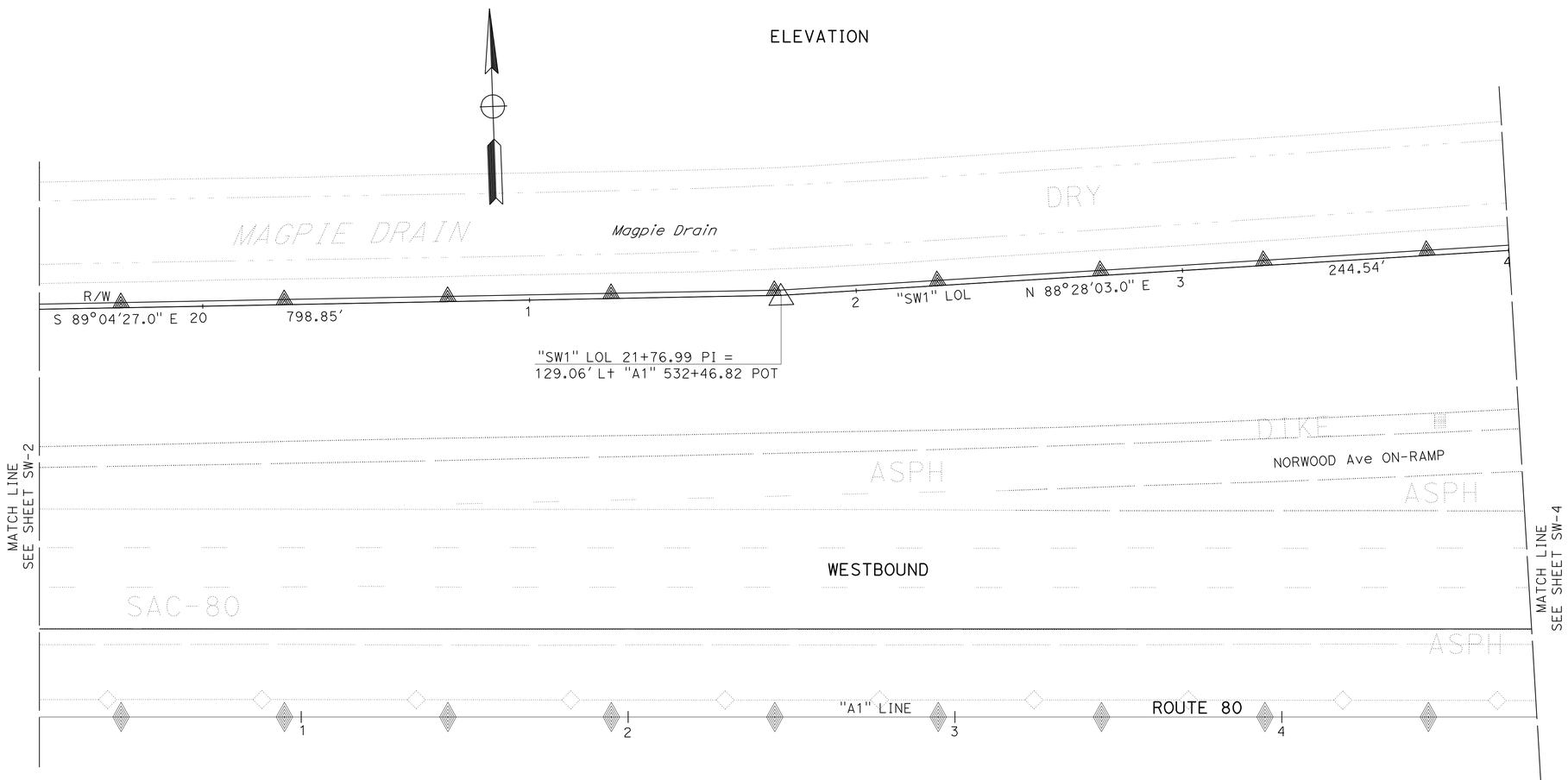

PLAN

THIS PLAN ACCURATE FOR SOUND WALL WORK ONLY.

SOUND WALL PLAN

SOUND WALL No. 1

SCALE: 1" = 20'

SW-3

REVISED BY	DATE REVISED
A.S.RANDHAWA	AMY FONG

CALCULATED-DESIGNED BY
CHECKED BY

FUNCTIONAL SUPERVISOR: CYRUS HUI

STATE OF CALIFORNIA - DEPARTMENT OF TRANSPORTATION
Caltrans
NORTH REGION
OFFICE OF DESIGN SOUTH
DESIGN BRANCH S7

LAST REVISION 00-00-00 | DATE PLOTTED => 04-FEB-2011 | TIME PLOTTED => 08:18

Dist	COUNTY	ROUTE	POST MILES TOTAL PROJECT	SHEET No.	TOTAL SHEETS
03	Yol,Sac	80	R10.9/R11.7, M0.0/M10.4	582	1012

REGISTERED CIVIL ENGINEER 6-15-10 DATE

9-7-10
PLANS APPROVAL DATE

REGISTERED PROFESSIONAL ENGINEER
A. Y. FONG
No. 64343
Exp 6-30-11
CIVIL
STATE OF CALIFORNIA

THE STATE OF CALIFORNIA OR ITS OFFICERS OR AGENTS SHALL NOT BE RESPONSIBLE FOR THE ACCURACY OR COMPLETENESS OF SCANNED COPIES OF THIS PLAN SHEET.

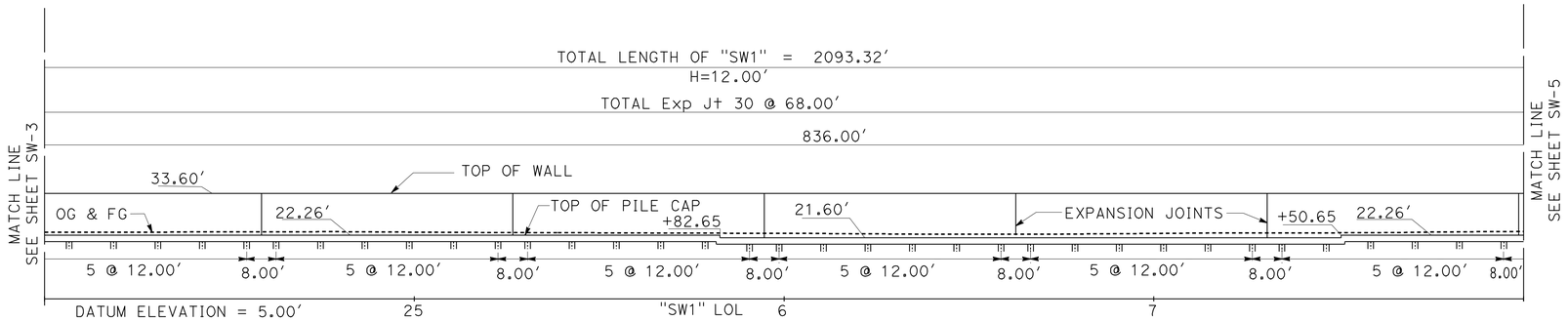

ELEVATION

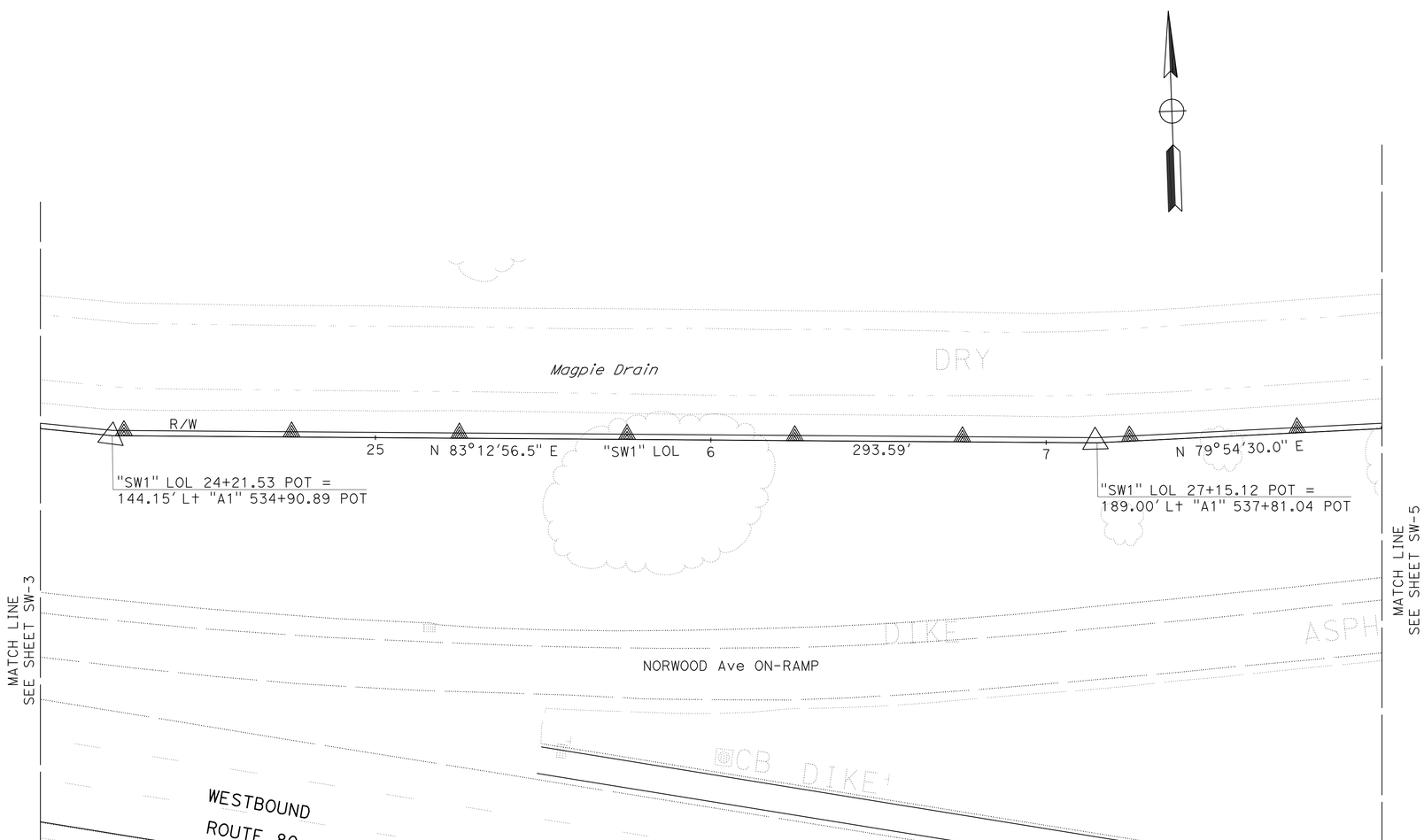

PLAN

THIS PLAN ACCURATE FOR SOUND WALL WORK ONLY.

SOUND WALL PLAN

SOUND WALL No. 1

SCALE: 1" = 20'

SW-4

STATE OF CALIFORNIA - DEPARTMENT OF TRANSPORTATION
Caltrans
NORTH REGION
OFFICE OF DESIGN SOUTH
DESIGN BRANCH S7

FUNCTIONAL SUPERVISOR: CYRUS HUI
CALCULATED-DESIGNED BY: A.S.RANDHAWA
CHECKED BY: AMY FONG
REVISED BY
DATE REVISED

LAST REVISION 00-00-00
DATE PLOTTED => 04-FEB-2011
TIME PLOTTED => 08:18

Dist	COUNTY	ROUTE	POST MILES TOTAL PROJECT	SHEET No.	TOTAL SHEETS
03	Yol,Sac	80	R10.9/R11.7, M0.0/M10.4	583	1012

REGISTERED CIVIL ENGINEER 6-15-10 DATE

9-7-10
PLANS APPROVAL DATE

REGISTERED PROFESSIONAL ENGINEER A. Y. FONG No. 64343 Exp 6-30-11 CIVIL STATE OF CALIFORNIA

THE STATE OF CALIFORNIA OR ITS OFFICERS OR AGENTS SHALL NOT BE RESPONSIBLE FOR THE ACCURACY OR COMPLETENESS OF SCANNED COPIES OF THIS PLAN SHEET.

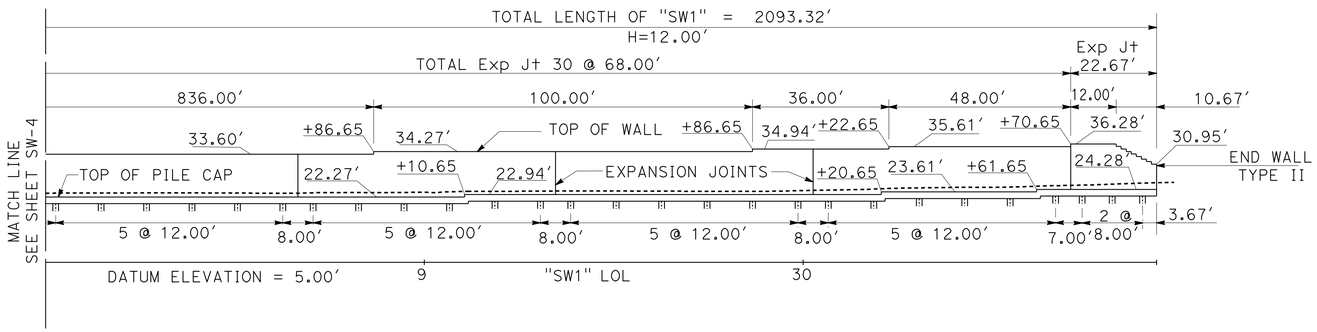

ELEVATION

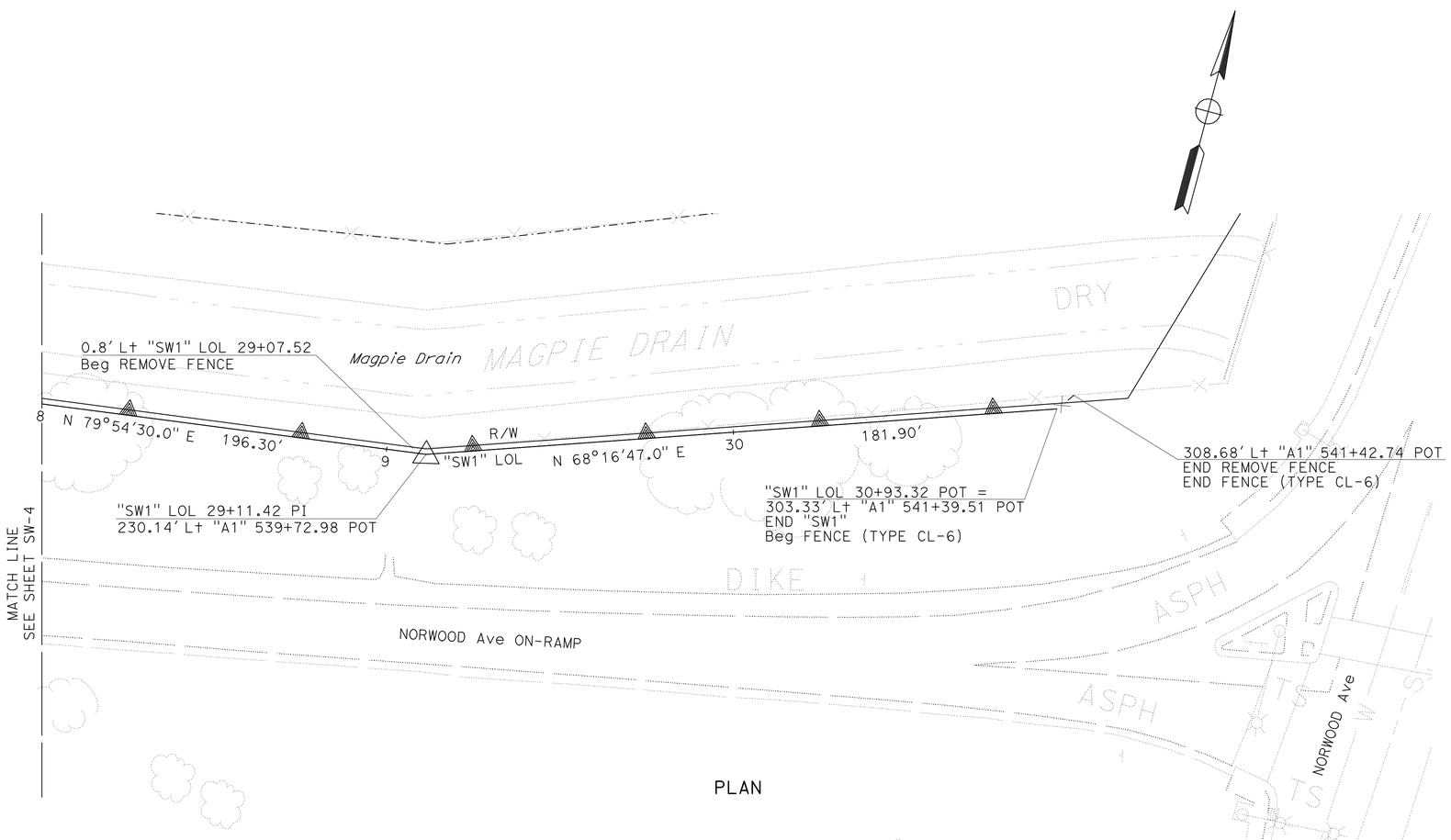

PLAN

THIS PLAN ACCURATE FOR SOUND WALL WORK ONLY.

SOUND WALL PLAN

SOUND WALL No. 1

SCALE: 1" = 20'

SW-5

STATE OF CALIFORNIA - DEPARTMENT OF TRANSPORTATION
Caltrans
NORTH REGION
OFFICE OF DESIGN SOUTH
DESIGN BRANCH S7

FUNCTIONAL SUPERVISOR: CYRUS HUI
CALCULATED-DESIGNED BY: A.S.RANDHAWA
CHECKED BY: AMY FONG
REVISED BY
DATE REVISED

LAST REVISION 00-00-00
DATE PLOTTED => 04-FEB-2011
TIME PLOTTED => 08:19

DIST	COUNTY	ROUTE	POST MILES TOTAL PROJECT	SHEET No	TOTAL SHEETS
03	Yol,Sac	80	R10.9/R11.7, M0.0/M10.4	584	1012

Reid Buell 10-30-08
CERTIFIED ENGINEERING GEOLOGIST

9-7-10
PLANS APPROVAL DATE

The State of California or its officers or agents shall not be responsible for the accuracy or completeness of electronic copies of this plan sheet.

PROFESSIONAL GEOLOGIST Reid Buell No. 1481 Exp. 4-30-09 CERTIFIED ENGINEERING GEOLOGIST STATE OF CALIFORNIA

This LOTB sheet was generally prepared in accordance with the Caltrans Soil & Rock Logging, Classification, and Presentation Manual (June 2007).

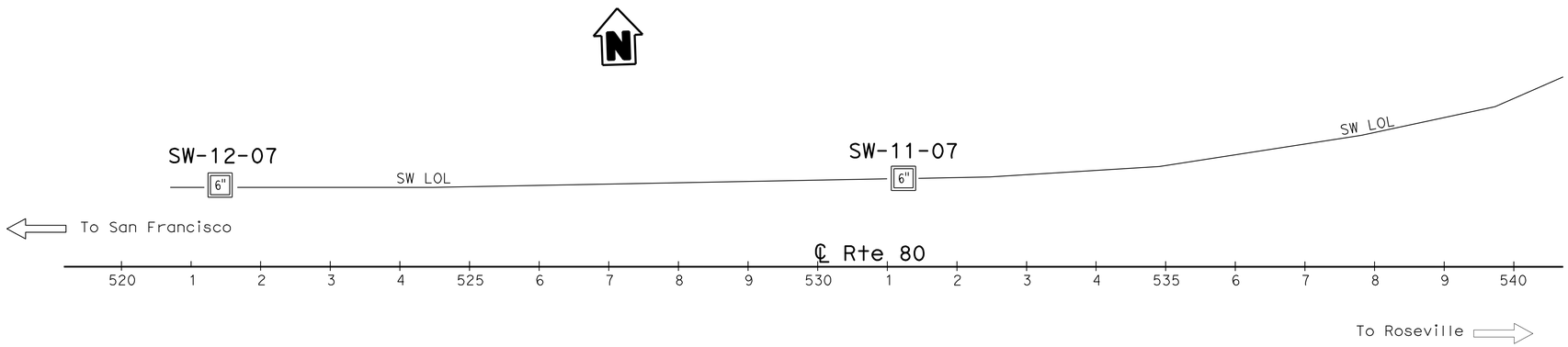

BENCH MARK

Approximate boring elevations were derived from District Survey maps.

PLAN

1" = 100'

NOTES:

1. All test borings were advanced using a hollow stem auger.
2. No ground water encountered during field investigation.
3. The descriptions and classifications of soil, including consistency and relative density descriptors, used by the field personnel for the exploration boreholes shown on these sheets are generally based on the "Soil and Rock Logging, Classification, and Presentation Manual," Division of Engineering Services, Geotechnical Services, (June 2007).
4. Soil colors were determined using Munsell Soil Color Charts (1994, Revised Edition).
5. All Test borings utilized a Safety Hammer to advance the sampler using a 140 lb hammer with a 30 inch drop. The SPT N-values shown on the Log of Test Boring (LOTB) sheets were actual values recorded in the field. The relative/apparent density descriptors shown on the LOTB sheets are based on the actual SPT N-values recorded in the field. Consistency descriptors shown on the LOTB sheets are based on the actual SPT N-values or the pocket penetrometer readings.
6. E = Blow count for 1.0 foot penetration extrapolated from blow count for less than 1.0 foot (due to change in material or hard driving).

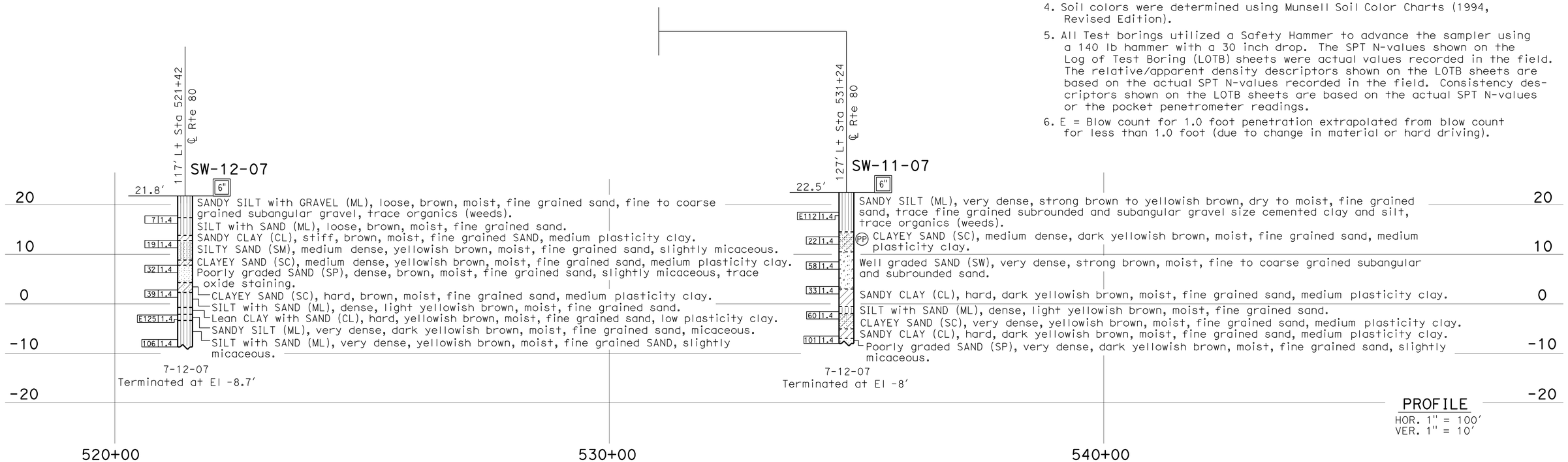

PROFILE

HOR. 1" = 100'
VER. 1" = 10'

ENGINEERING SERVICES	GEOTECHNICAL SERVICES	STATE OF CALIFORNIA DEPARTMENT OF TRANSPORTATION	DIVISION OF ENGINEERING SERVICES STRUCTURE DESIGN DESIGN BRANCH	BRIDGE NO. / POST MILES	SOUND WALL NO. 1 LOG OF TEST BORINGS 1 OF 4
FUNCTIONAL SUPERVISOR NAME: Roy Bibbens	DRAWN BY: I. G-Remmen, 8/08 CHECKED BY: J. Martin	FIELD INVESTIGATION BY: J. Martin	CU 03 EA 379701		

OGS CIVIL LOG OF TEST BORINGS SHEET

ORIGINAL SCALE IN INCHES FOR REDUCED PLANS 0 1 2 3

DISREGARD PRINTS BEARING EARLIER REVISION DATES → 10-30-08

REVISION DATES | SHEET | OF

FILE => 337970rasw1-1of4.dgn

USERNAME => trlenard DATE PLOTTED => 04-FEB-2011 TIME PLOTTED => 08:19

DIST	COUNTY	ROUTE	POST MILES TOTAL PROJECT	SHEET No	TOTAL SHEETS
03	Yol,Sac	80	R10.9/R11.7, M0.0/M10.4	585	1012

10-30-08
CERTIFIED ENGINEERING GEOLOGIST

9-7-10
PLANS APPROVAL DATE

PROFESSIONAL GEOLOGIST Reid Buell No. 1481 Exp. 4-30-09 CERTIFIED ENGINEERING GEOLOGIST STATE OF CALIFORNIA

The State of California or its officers or agents shall not be responsible for the accuracy or completeness of electronic copies of this plan sheet.

REFERENCE: CALTRANS SOIL & ROCK LOGGING, CLASSIFICATION, AND PRESENTATION MANUAL (JUNE 2007)

CEMENTATION

Description	Criteria
Weak	Crumbles or breaks with handling or little finger pressure.
Moderate	Crumbles or breaks with considerable finger pressure.
Strong	Will not crumble or break with finger pressure.

CONSISTENCY OF COHESIVE SOILS

Description	Unconfined Compressive Strength (tsf)	Pocket Penetrometer Measurement (tsf)	Torvane Measurement (tsf)	Field Approximation
Very Soft	< 0.25	< 0.25	< 0.12	Easily penetrated several inches by fist
Soft	0.25 to 0.50	0.25 to 0.50	0.12 to 0.25	Easily penetrated several inches by thumb
Medium Stiff	0.50 to 1.0	0.50 to 1.0	0.25 to 0.50	Penetrated several inches by thumb with moderate effort
Stiff	1 to 2	1 to 2	0.50 to 1.0	Readily indented by thumb but penetrated only with great effort
Very Stiff	2 to 4	2 to 4	1.0 to 2.0	Readily indented by thumbnail
Hard	> 4.0	> 4.0	> 2.0	Indented by thumbnail with difficulty

BOREHOLE IDENTIFICATION

Symbol	Hole Type	Description
Size	A	Auger Boring
Size	R P	Rotary drilled boring Rotary percussion boring (air)
Size	R	Rotary drilled diamond core
Size	HD HA	Hand driven (1-inch soil tube) Hand Auger
●	D	Dynamic Cone Penetration Boring
▲	CPT	Cone Penetration Test (ASTM D 5778-95)
⬚	O	Other

Note: Size in inches.

PLASTICITY OF FINE-GRAINED SOILS

Description	Criteria
Nonplastic	A 1/8-inch thread cannot be rolled at any water content.
Low	The thread can barely be rolled and the lump cannot be formed when drier than the plastic limit.
Medium	The thread is easy to roll and not much time is required to reach the plastic limit. The thread cannot be rerolled after reaching the plastic limit. The lump crumbles when drier than the plastic limit.
High	It takes considerable time rolling and kneading to reach the plastic limit. The thread can be rerolled several times after reaching the plastic limit. The lump can be formed without crumbling when drier than the plastic limit.

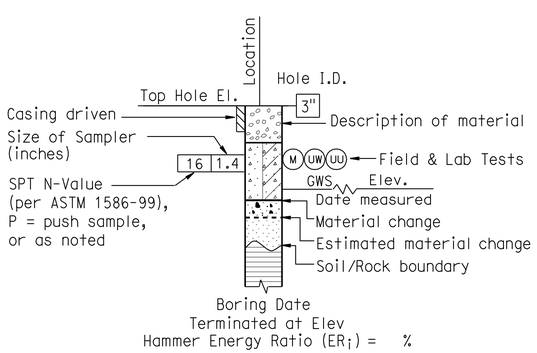

ROTARY BORING

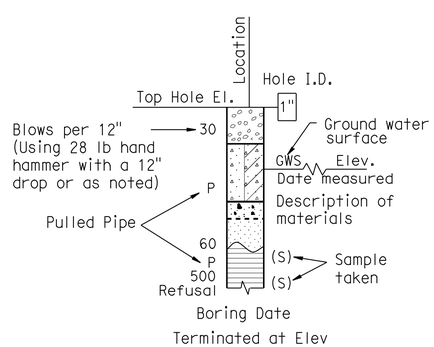

HAND BORING

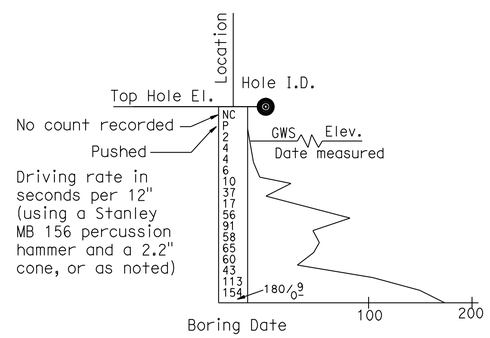

DYNAMIC CONE PENETRATION BORING

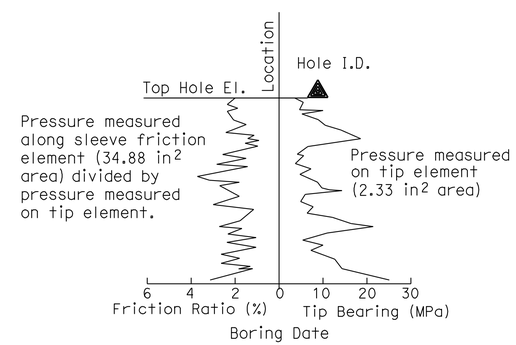

CONE PENETRATION TEST (CPT) SOUNDING

ENGINEERING SERVICES	GEOTECHNICAL SERVICES	STATE OF CALIFORNIA DEPARTMENT OF TRANSPORTATION	DIVISION OF ENGINEERING SERVICES STRUCTURE DESIGN DESIGN BRANCH	BRIDGE NO. / POST MILES	SOUND WALL NO. 1 LOG OF TEST BORINGS 2 OF 4
	PREPARED BY: I. G-Remmen, 8/08				

OGS CIVIL LOG OF TEST BORINGS SHEET

ORIGINAL SCALE IN INCHES FOR REDUCED PLANS 0 1 2 3

CU 03
EA 379701

DISREGARD PRINTS BEARING EARLIER REVISION DATES 10-30-08

REVISION DATES | SHEET | OF

FILE => 337970rasw1-2of4.dgn

USERNAME => trlenard DATE PLOTTED => 04-FEB-2011 TIME PLOTTED => 08:19

REFERENCE: CALTRANS SOIL & ROCK LOGGING, CLASSIFICATION, AND PRESENTATION MANUAL (JUNE 2007)

DIST	COUNTY	ROUTE	POST MILES TOTAL PROJECT	SHEET No	TOTAL SHEETS
03	Yol,Sac	80	R10.9/R11.7, M0.0/M10.4	586	1012

CERTIFIED ENGINEERING GEOLOGIST 10-30-08

9-7-10
PLANS APPROVAL DATE

PROFESSIONAL GEOLOGIST Reid Buell No. 1481 Exp. 4-30-09 CERTIFIED ENGINEERING GEOLOGIST STATE OF CALIFORNIA

The State of California or its officers or agents shall not be responsible for the accuracy or completeness of electronic copies of this plan sheet.

GROUP SYMBOLS AND NAMES

Graphic/Symbol	Group Names
GW	Well-graded GRAVEL Well-graded GRAVEL with SAND
GP	Poorly graded GRAVEL Poorly graded GRAVEL with SAND
GW-GM	Well-graded GRAVEL with SILT Well-graded GRAVEL with SILT and SAND
GW-GC	Well-graded GRAVEL with CLAY (or SILTY CLAY) Well-graded GRAVEL with CLAY and SAND (or SILTY CLAY and SAND)
GP-GM	Poorly graded GRAVEL with SILT Poorly graded GRAVEL with SILT and SAND
GP-GC	Poorly graded GRAVEL with CLAY (or SILTY CLAY) Poorly graded GRAVEL with CLAY and SAND (or SILTY CLAY and SAND)
GM	SILTY GRAVEL SILTY GRAVEL with SAND
GC	CLAYEY GRAVEL CLAYEY GRAVEL with SAND
GC-GM	SILTY, CLAYEY GRAVEL SILTY, CLAYEY GRAVEL with SAND
SW	Well-graded SAND Well-graded SAND with GRAVEL
SP	Poorly graded SAND Poorly graded SAND with GRAVEL
SW-SM	Well-graded SAND with SILT Well-graded SAND with SILT and GRAVEL
SW-SC	Well-graded SAND with CLAY (or SILTY CLAY) Well-graded SAND with CLAY and GRAVEL (or SILTY CLAY and GRAVEL)
SP-SM	Poorly graded SAND with SILT Poorly graded SAND with SILT and GRAVEL
SP-SC	Poorly graded SAND with CLAY (or SILTY CLAY) Poorly graded SAND with CLAY and GRAVEL (or SILTY CLAY and GRAVEL)
SM	SILTY SAND SILTY SAND with GRAVEL
SC	CLAYEY SAND CLAYEY SAND with GRAVEL
SC-SM	SILTY, CLAYEY SAND SILTY, CLAYEY SAND with GRAVEL
PT	PEAT
	COBBLES COBBLES and BOULDERS BOULDERS

Graphic/Symbol	Group Names
CL	Lean CLAY Lean CLAY with SAND Lean CLAY with GRAVEL SANDY lean CLAY SANDY lean CLAY with GRAVEL GRAVELLY lean CLAY GRAVELLY lean CLAY with SAND
CL-ML	SILTY CLAY SILTY CLAY with SAND SILTY CLAY with GRAVEL SANDY SILTY CLAY SANDY SILTY CLAY with GRAVEL GRAVELLY SILTY CLAY GRAVELLY SILTY CLAY with SAND
ML	SILT SILT with SAND SILT with GRAVEL SANDY SILT SANDY SILT with GRAVEL GRAVELLY SILT GRAVELLY SILT with SAND
OL	ORGANIC lean CLAY ORGANIC lean CLAY with SAND ORGANIC lean CLAY with GRAVEL SANDY ORGANIC lean CLAY SANDY ORGANIC lean CLAY with GRAVEL GRAVELLY ORGANIC lean CLAY GRAVELLY ORGANIC lean CLAY with SAND
OL	ORGANIC SILT ORGANIC SILT with SAND ORGANIC SILT with GRAVEL SANDY ORGANIC SILT SANDY ORGANIC SILT with GRAVEL GRAVELLY ORGANIC SILT GRAVELLY ORGANIC SILT with SAND
CH	Fat CLAY Fat CLAY with SAND Fat CLAY with GRAVEL SANDY fat CLAY SANDY fat CLAY with GRAVEL GRAVELLY fat CLAY GRAVELLY fat CLAY with SAND
MH	Elastic SILT Elastic SILT with SAND Elastic SILT with GRAVEL SANDY elastic SILT SANDY elastic SILT with GRAVEL GRAVELLY elastic SILT GRAVELLY elastic SILT with SAND
OH	ORGANIC fat CLAY ORGANIC fat CLAY with SAND ORGANIC fat CLAY with GRAVEL SANDY ORGANIC fat CLAY SANDY ORGANIC fat CLAY with GRAVEL GRAVELLY ORGANIC fat CLAY GRAVELLY ORGANIC fat CLAY with SAND
OH	ORGANIC elastic SILT ORGANIC elastic SILT with SAND ORGANIC elastic SILT with GRAVEL SANDY ORGANIC elastic SILT SANDY ORGANIC elastic SILT with GRAVEL GRAVELLY ORGANIC elastic SILT GRAVELLY ORGANIC elastic SILT with SAND
OL/OH	ORGANIC SOIL ORGANIC SOIL with SAND ORGANIC SOIL with GRAVEL SANDY ORGANIC SOIL SANDY ORGANIC SOIL with GRAVEL GRAVELLY ORGANIC SOIL GRAVELLY ORGANIC SOIL with SAND

FIELD AND LABORATORY TESTING

- (C) Consolidation (ASTM D 2435)
- (CL) Collapse Potential (ASTM D 5333)
- (CP) Compaction Curve (CTM 216)
- (CR) Corrosivity Testing (CTM 643, CTM 422, CTM 417)
- (CU) Consolidated Undrained Triaxial (ASTM D 4767)
- (DS) Direct Shear (ASTM D 3080)
- (EI) Expansion Index (ASTM D 4829)
- (M) Moisture Content (ASTM D 2216)
- (OC) Organic Content-% (ASTM D 2974)
- (P) Permeability (CTM 220)
- (PA) Particle Size Analysis (ASTM D 422)
- (PI) Plasticity Index (AASHTO T 90) Liquid Limit (AASHTO T 89)
- (PL) Point Load Index (ASTM D 5731)
- (PM) Pressure Meter
- (PP) Pocket Penetrometer
- (R) R-Value (CTM 301)
- (SE) Sand Equivalent (CTM 217)
- (SG) Specific Gravity (AASHTO T 100)
- (SL) Shrinkage Limit (ASTM D 427)
- (SW) Swell Potential (ASTM D 4546)
- (TV) Pocket Torvane
- (UC) Unconfined Compression-Soil (ASTM D 2166) Unconfined Compression-Rock (ASTM D 2938)
- (UU) Unconsolidated Undrained Triaxial (ASTM D 2850)
- (UW) Unit Weight (ASTM D 4767)
- (VS) Vane Shear (AASHTO T 223)

APPARENT DENSITY OF COHESIONLESS SOILS

Description	SPT N_{60} (Blows / 12 inches)
Very loose	0 - 4
Loose	5 - 10
Medium Dense	11 - 30
Dense	31 - 50
Very Dense	> 50

MOISTURE

Description	Criteria
Dry	Absence of moisture, dusty, dry to the touch
Moist	Damp but no visible water
Wet	Visible free water, usually soil is below water table

PERCENT OR PROPORTION OF SOILS

Description	Criteria
Trace	Particles are present but estimated to be less than 5%
Few	5 to 10%
Little	15 to 25%
Some	30 to 45%
Mostly	50 to 100%

PARTICLE SIZE

Description		Size
Boulder		> 12"
Cobble		3" to 12"
Gravel	Coarse	3/4" to 3"
	Fine	No. 4 to 3/4"
Sand	Coarse	No. 10 to No. 4
	Medium	No. 40 to No. 10
	Fine	No. 200 to No. 40

ENGINEERING SERVICES

GEOTECHNICAL SERVICES
PREPARED BY: I. G-Remmen, 8/08

STATE OF CALIFORNIA DEPARTMENT OF TRANSPORTATION

DIVISION OF ENGINEERING SERVICES STRUCTURE DESIGN
DESIGN BRANCH

BRIDGE NO.
POST MILES

SOUND WALL NO. 1
LOG OF TEST BORINGS 3 OF 4

OGS CIVIL LOG OF TEST BORINGS SHEET

ORIGINAL SCALE IN INCHES FOR REDUCED PLANS 0 1 2 3

CU 03
EA 379701

DISREGARD PRINTS BEARING EARLIER REVISION DATES 10-30-08

REVISION DATES | SHEET | OF

FILE => 337970rasw1-3of4.dgn

USERNAME => trienard DATE PLOTTED => 04-FEB-2011 TIME PLOTTED => 08:19

FED. ROAD DIV. No.	STATE	F. A. PROJECT No.	SHEET No.	TOTAL SHEETS
7	CALIF.			

Dist.	County	Route	Section	Sheet No.	Total Sheets
3	Sac	880	2.2/4.7	283	393

Bridge Engineer — Civil Engineers' License 13565

Date Approved August 21, 1962

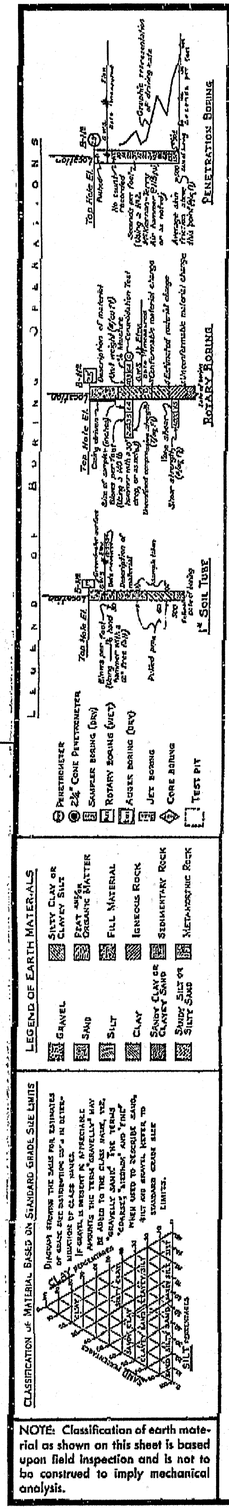

DRAWN by K. Bridges 5-15-63
CHECKED by D. Bruder 5-31-63
Approval Recommended by [signature] Engineer-Geologist

BRIDGE DEPARTMENT
ENGINEERING GEOLOGY SECTION

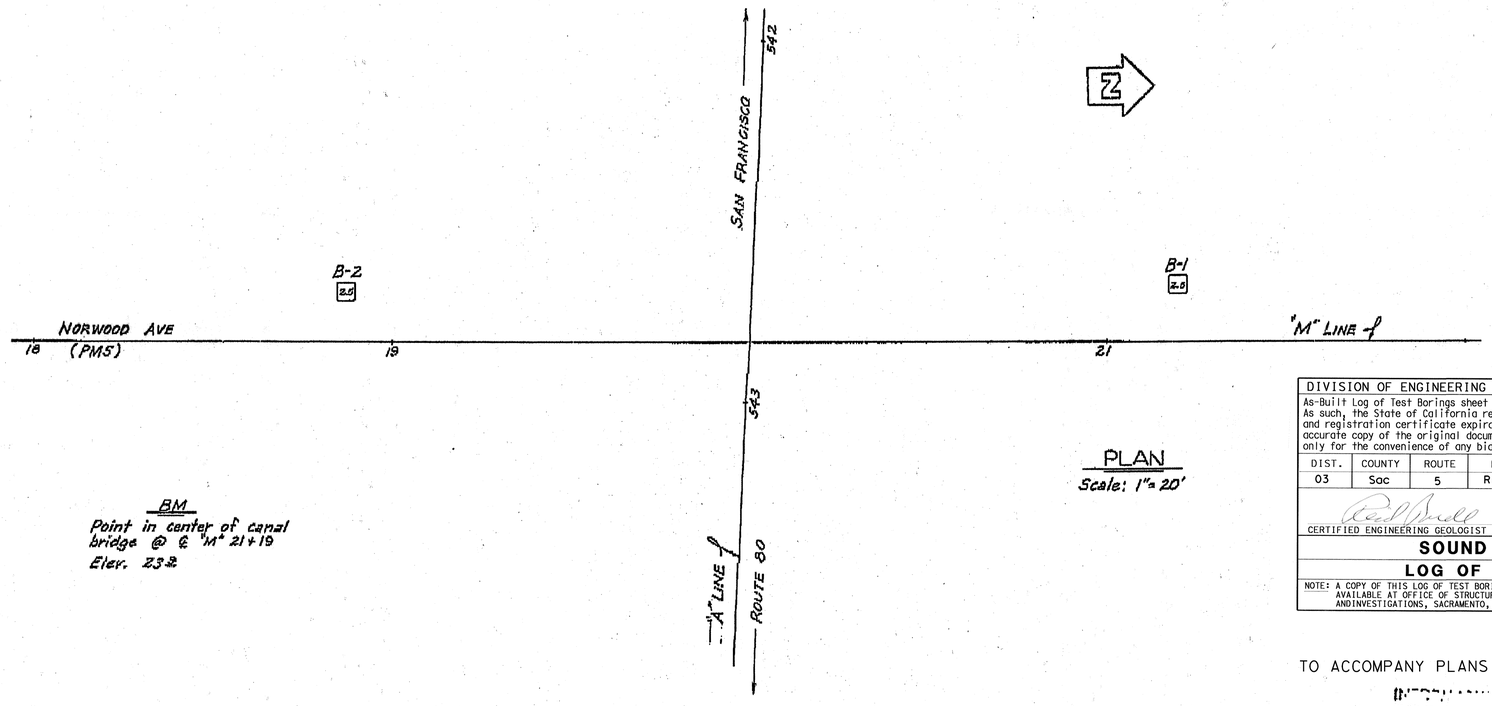

BM
Point in center of canal bridge @ ℄ "M" 21+19
Elev. 23.2

PLAN
Scale: 1" = 20'

DIVISION OF ENGINEERING SERVICES - GEOTECHNICAL SERVICES					
As-Built Log of Test Borings sheet is considered an informational document only. As such, the State of California registration seal with signature, license number and registration certificate expiration date confirm that this is a true and accurate copy of the original document. this drawing is available and presented only for the convenience of any bidder, contractor or other interested party.					
DIST.	COUNTY	ROUTE	POST MILE-TOTAL PROJECT	Sheet No.	Total Sheets
03	Sac	5	R10.9/R11.7, M0.0/M10.4	587	1012
CERTIFIED ENGINEERING GEOLOGIST			10/30/08 DATE		
SOUND WALL NO. 1					
LOG OF TEST BORINGS 4 OF 4					
NOTE: A COPY OF THIS LOG OF TEST BORINGS IS AVAILABLE AT OFFICE OF STRUCTURE MAINTENANCE AND INVESTIGATIONS, SACRAMENTO, CALIFORNIA	CU: 03 EA: 379701		BRIDGE No.		
			Sheet	of	

PROFESSIONAL GEOLOGIST
Reid Buell
No. 1481
Exp. 4-30-09
CERTIFIED ENGINEERING GEOLOGIST
STATE OF CALIFORNIA

TO ACCOMPANY PLANS DATED 9-7-10

INFORMATION ON ACTUAL FOUNDATION CONDITIONS ENCOUNTERED IS ON FILE IN BRIDGE GEOLOGY SECTION

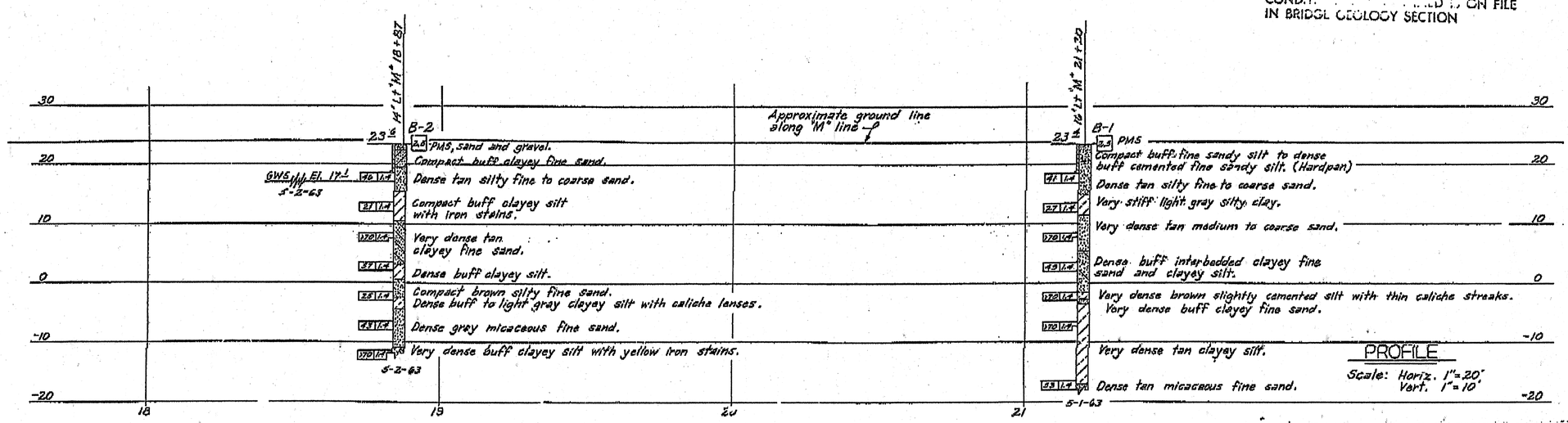

PROFILE
Scale: Horiz. 1" = 20'
Vert. 1" = 10'

SHEET	OF
15	15

AS BUILT PLANS
Contract No. 03-072-644
Date Completed 8-70
Document No. 30000961

STATE OF CALIFORNIA
DEPARTMENT OF PUBLIC WORKS
DIVISION OF HIGHWAYS

NORWOOD AVENUE OVERCROSSING

LOG OF TEST BORINGS

SCALE As Noted	BRIDGE 24-108	Post MILE 6.1	DRAWING 24108-10

Disregard prior bearing earlier numbers → PREL. DRAWING NO. PR- 8/63 8/64

983

337970rasw1-4of4.tif

Dist	COUNTY	ROUTE	POST MILES TOTAL PROJECT	SHEET No.	TOTAL SHEETS
03	Yol,Sac	80	R10.9/R11.7, M0.0/M10.4	588	1012

REGISTERED CIVIL ENGINEER 6-15-10 DATE

9-7-10
PLANS APPROVAL DATE

REGISTERED PROFESSIONAL ENGINEER A. Y. FONG No. 64343 Exp 6-30-11 CIVIL STATE OF CALIFORNIA

THE STATE OF CALIFORNIA OR ITS OFFICERS OR AGENTS SHALL NOT BE RESPONSIBLE FOR THE ACCURACY OR COMPLETENESS OF SCANNED COPIES OF THIS PLAN SHEET.

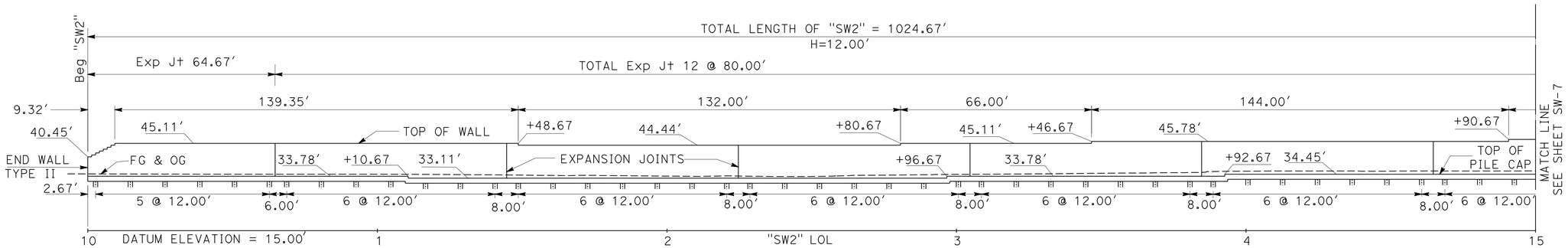

ELEVATION

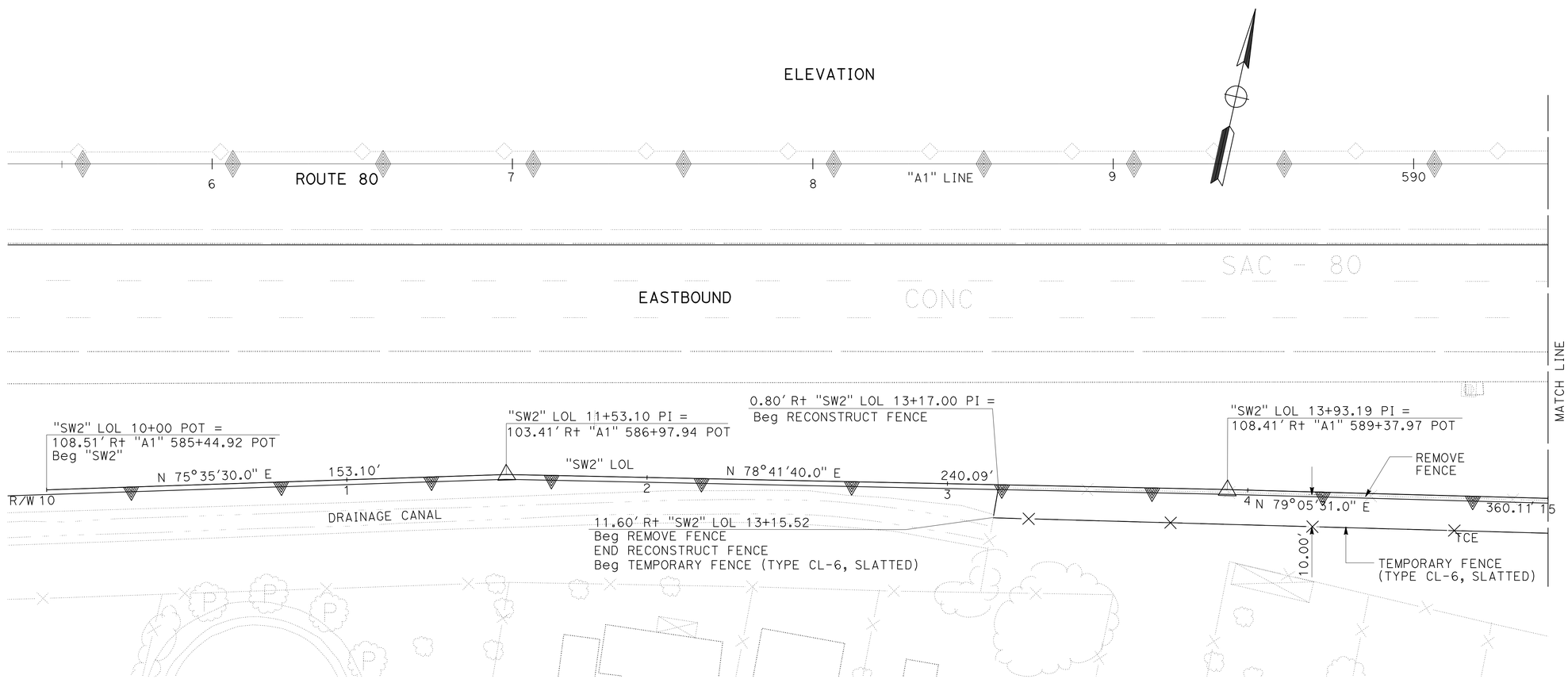

PLAN

SOUND WALL PLAN

SOUND WALL No. 2

SCALE: 1" = 20'

SW-6

THIS PLAN ACCURATE FOR SOUND WALL WORK ONLY.

REVISED BY | DATE REVISED
A.S.RANDHAWA | AMY FONG
CALCULATED-DESIGNED BY | CHECKED BY
FUNCTIONAL SUPERVISOR
CYRUS HUI

STATE OF CALIFORNIA - DEPARTMENT OF TRANSPORTATION
Caltrans
NORTH REGION
OFFICE OF DESIGN SOUTH
DESIGN BRANCH S7

LAST REVISION 00-00-00 | DATE PLOTTED => 04-FEB-2011 | TIME PLOTTED => 11:22

Dist	COUNTY	ROUTE	POST MILES TOTAL PROJECT	SHEET No.	TOTAL SHEETS
03	Yol,Sac	80	R10.9/R11.7, M0.0/M10.4	589	1012

REGISTERED CIVIL ENGINEER 6-15-10 DATE

9-7-10
PLANS APPROVAL DATE

REGISTERED PROFESSIONAL ENGINEER A. Y. FONG No. 64343 Exp 6-30-11 CIVIL STATE OF CALIFORNIA

THE STATE OF CALIFORNIA OR ITS OFFICERS OR AGENTS SHALL NOT BE RESPONSIBLE FOR THE ACCURACY OR COMPLETENESS OF SCANNED COPIES OF THIS PLAN SHEET.

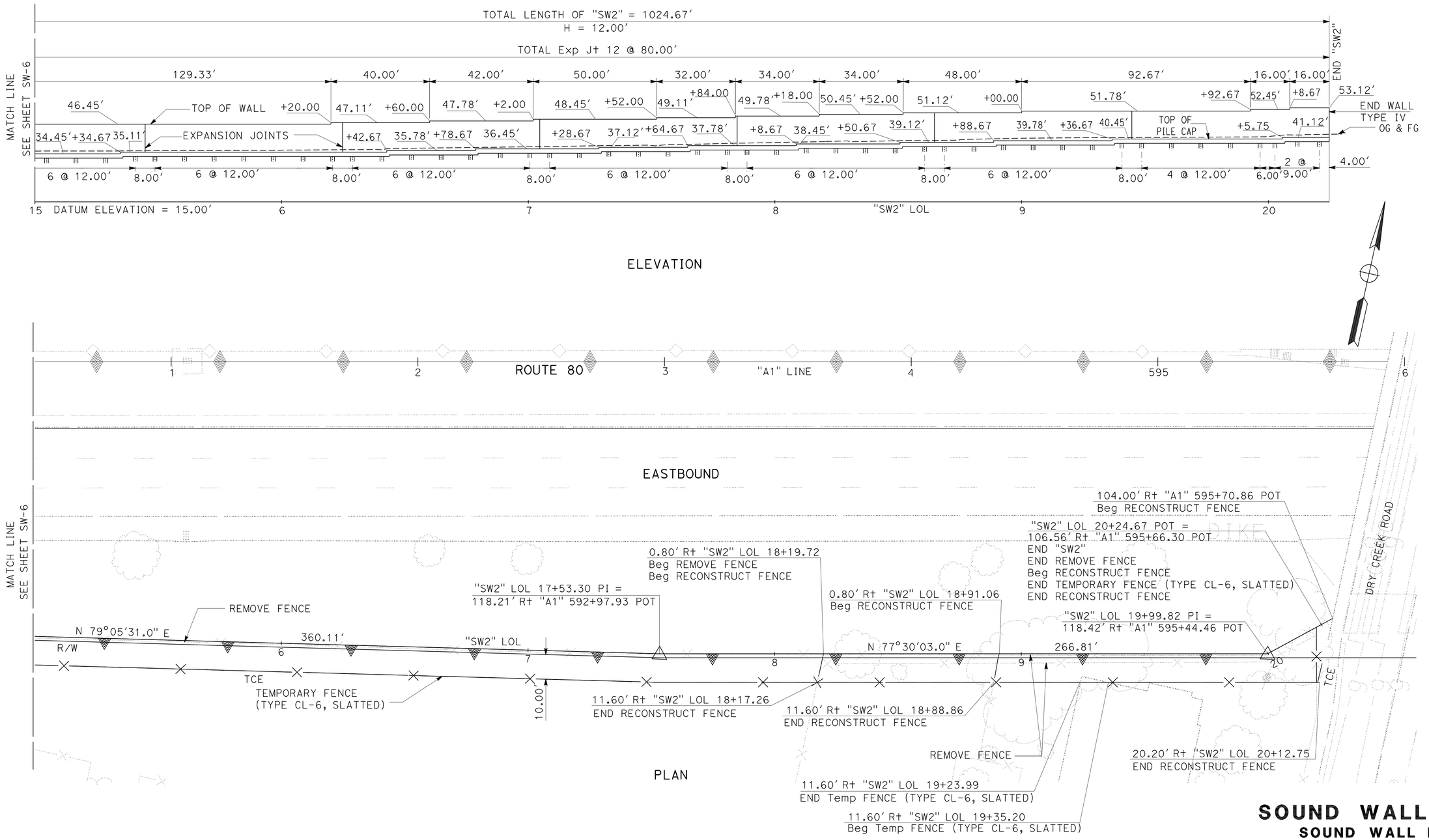

THIS PLAN ACCURATE FOR SOUND WALL WORK ONLY.

SOUND WALL PLAN
SOUND WALL No. 2
SCALE: 1" = 20'

SW-7

STATE OF CALIFORNIA - DEPARTMENT OF TRANSPORTATION
Caltrans®
NORTH REGION
OFFICE OF DESIGN SOUTH
DESIGN BRANCH S7

FUNCTIONAL SUPERVISOR: CYRUS HUI
CALCULATED-DESIGNED BY: A.S.RANDHAWA
CHECKED BY: AMY FONG
REVISED BY
DATE REVISED

LAST REVISION 00-00-00
DATE PLOTTED => 04-FEB-2011
TIME PLOTTED => 11:22

DIST	COUNTY	ROUTE	POST MILES TOTAL PROJECT	SHEET No	TOTAL SHEETS
03	Yol,Sac	80	R10.9/R11.7, M0.0/M10.4	590	1012

CERTIFIED ENGINEERING GEOLOGIST 10-30-08

9-7-10
PLANS APPROVAL DATE

PROFESSIONAL GEOLOGIST Reid Buell No. 1481 Exp. 4-30-09 CERTIFIED ENGINEERING GEOLOGIST STATE OF CALIFORNIA

The State of California or its officers or agents shall not be responsible for the accuracy or completeness of electronic copies of this plan sheet.

This LOTB sheet was generally prepared in accordance with the Caltrans Soil & Rock Logging, Classification, and Presentation Manual (June 2007).

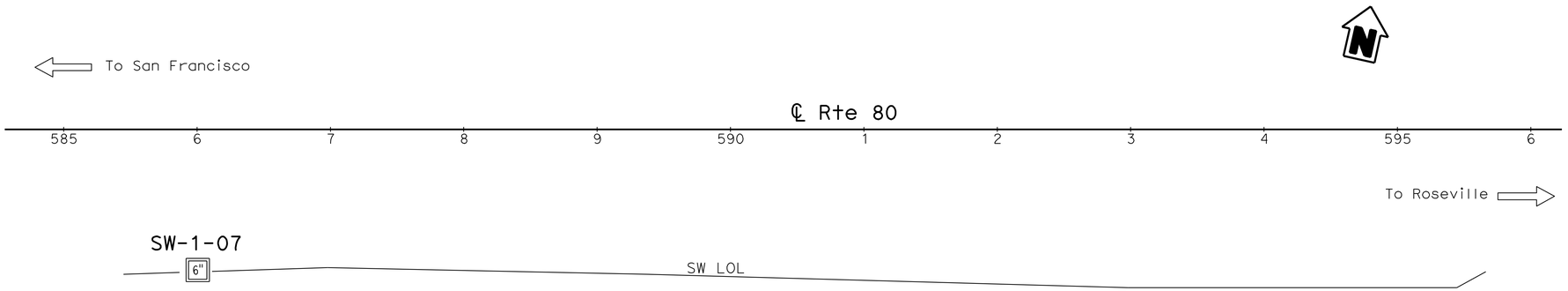

BENCH MARK

Approximate boring elevation was derived from District Survey maps.

PLAN

1" = 50′

NOTES:

1. Test boring was advanced using a hollow stem auger.
2. No ground water encountered during field investigation.
3. The descriptions and classifications of soil, including consistency and relative density descriptors, used by the field personnel for the exploration boreholes shown on these sheets are generally based on the "Soil and Rock Logging, Classification, and Presentation Manual," Division of Engineering Services, Geotechnical Services, (June 2007).
4. Soil colors were determined using Munsell Soil Color Charts (1994, Revised Edition).
5. Test boring utilized a Safety Hammer to advance the sampler using a 140 lb hammer with a 30 inch drop. The SPT N-values shown on the Log of Test Boring (LOTB) sheets were actual values recorded in the field. The relative/apparent density descriptors shown on the LOTB sheets are based on the actual SPT N-values recorded in the field. Consistency descriptors shown on the LOTB sheets are based on the actual SPT N-values or the pocket penetrometer readings.
6. E = Blow count for 1.0 foot penetration extrapolated from blow count for less than 1.0 foot (due to change in material or hard driving).

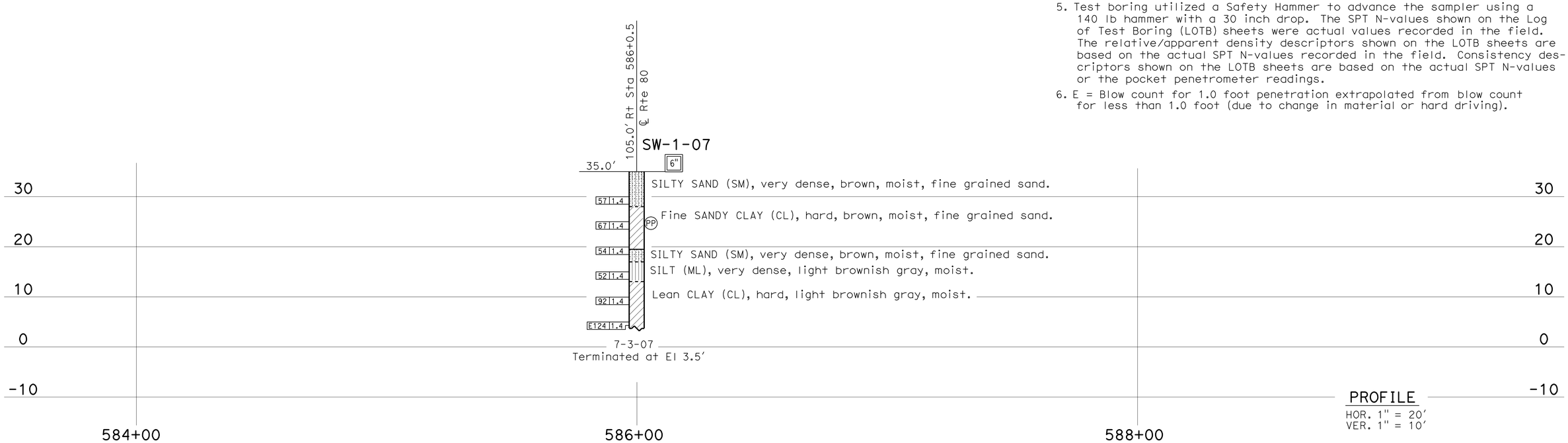

PROFILE

HOR. 1" = 20′
VER. 1" = 10′

ENGINEERING SERVICES	GEOTECHNICAL SERVICES	STATE OF CALIFORNIA DEPARTMENT OF TRANSPORTATION	DIVISION OF ENGINEERING SERVICES STRUCTURE DESIGN DESIGN BRANCH	BRIDGE NO. / POST MILES	SOUND WALL NO. 2 LOG OF TEST BORINGS 1 OF 4
FUNCTIONAL SUPERVISOR NAME: Roy Bibbens	DRAWN BY: I. G-Remmen, 8/08 CHECKED BY: J. Martin	FIELD INVESTIGATION BY: J. Martin	CU 03 EA 379701		

OGS CIVIL LOG OF TEST BORINGS SHEET

ORIGINAL SCALE IN INCHES FOR REDUCED PLANS 0 1 2 3

DISREGARD PRINTS BEARING EARLIER REVISION DATES → 10-30-08

REVISION DATES | SHEET | OF

FILE => 337970rbsw2-1of4.dgn

USERNAME => trpierce DATE PLOTTED => 04-FEB-2011 TIME PLOTTED => 11:22

DIST	COUNTY	ROUTE	POST MILES TOTAL PROJECT	SHEET No	TOTAL SHEETS
03	Yol,Sac	80	R10.9/R11.7, M0.0/M10.4	591	1012

10-30-08
CERTIFIED ENGINEERING GEOLOGIST

9-7-10
PLANS APPROVAL DATE

PROFESSIONAL GEOLOGIST Reid Buell No. 1481 Exp. 4-30-09 CERTIFIED ENGINEERING GEOLOGIST STATE OF CALIFORNIA

The State of California or its officers or agents shall not be responsible for the accuracy or completeness of electronic copies of this plan sheet.

REFERENCE: CALTRANS SOIL & ROCK LOGGING, CLASSIFICATION, AND PRESENTATION MANUAL (JUNE 2007)

CEMENTATION

Description	Criteria
Weak	Crumbles or breaks with handling or little finger pressure.
Moderate	Crumbles or breaks with considerable finger pressure.
Strong	Will not crumble or break with finger pressure.

CONSISTENCY OF COHESIVE SOILS

Description	Unconfined Compressive Strength (tsf)	Pocket Penetrometer Measurement (tsf)	Torvane Measurement (tsf)	Field Approximation
Very Soft	< 0.25	< 0.25	< 0.12	Easily penetrated several inches by fist
Soft	0.25 to 0.50	0.25 to 0.50	0.12 to 0.25	Easily penetrated several inches by thumb
Medium Stiff	0.50 to 1.0	0.50 to 1.0	0.25 to 0.50	Penetrated several inches by thumb with moderate effort
Stiff	1 to 2	1 to 2	0.50 to 1.0	Readily indented by thumb but penetrated only with great effort
Very Stiff	2 to 4	2 to 4	1.0 to 2.0	Readily indented by thumbnail
Hard	> 4.0	> 4.0	> 2.0	Indented by thumbnail with difficulty

BOREHOLE IDENTIFICATION

Symbol	Hole Type	Description
Size	A	Auger Boring
Size	R P	Rotary drilled boring Rotary percussion boring (air)
Size	R	Rotary drilled diamond core
Size	HD HA	Hand driven (1-inch soil tube) Hand Auger
●	D	Dynamic Cone Penetration Boring
▲	CPT	Cone Penetration Test (ASTM D 5778-95)
⬚	O	Other

Note: Size in inches.

PLASTICITY OF FINE-GRAINED SOILS

Description	Criteria
Nonplastic	A 1/8-inch thread cannot be rolled at any water content.
Low	The thread can barely be rolled and the lump cannot be formed when drier than the plastic limit.
Medium	The thread is easy to roll and not much time is required to reach the plastic limit. The thread cannot be rerolled after reaching the plastic limit. The lump crumbles when drier than the plastic limit.
High	It takes considerable time rolling and kneading to reach the plastic limit. The thread can be rerolled several times after reaching the plastic limit. The lump can be formed without crumbling when drier than the plastic limit.

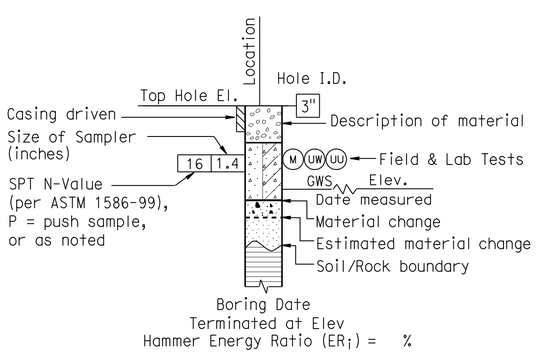

ROTARY BORING

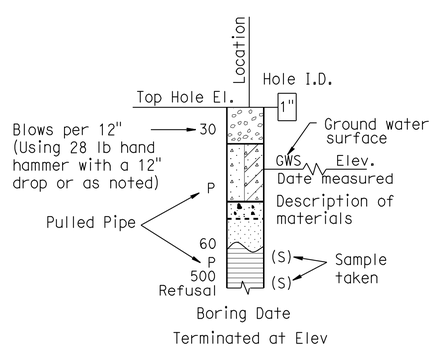

HAND BORING

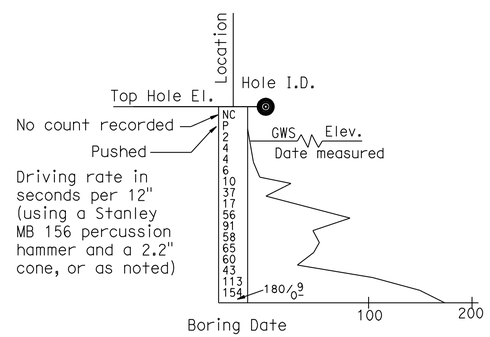

DYNAMIC CONE PENETRATION BORING

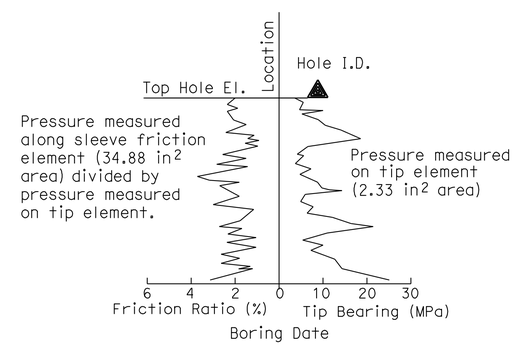

CONE PENETRATION TEST (CPT) SOUNDING

ENGINEERING SERVICES	GEOTECHNICAL SERVICES	STATE OF CALIFORNIA DEPARTMENT OF TRANSPORTATION	DIVISION OF ENGINEERING SERVICES STRUCTURE DESIGN DESIGN BRANCH	BRIDGE NO. / POST MILES	SOUND WALL NO. 2 LOG OF TEST BORINGS 2 OF 4
	PREPARED BY: I. G-Remmen, 8/08				

OGS CIVIL LOG OF TEST BORINGS SHEET

ORIGINAL SCALE IN INCHES FOR REDUCED PLANS 0 1 2 3

CU 03
EA 379701

DISREGARD PRINTS BEARING EARLIER REVISION DATES 10-30-08

REVISION DATES | SHEET | OF

FILE => 337970rbsw2-2of4.dgn

USERNAME => tripierce DATE PLOTTED => 04-FEB-2011 TIME PLOTTED => 11:22

REFERENCE: CALTRANS SOIL & ROCK LOGGING, CLASSIFICATION, AND PRESENTATION MANUAL (JUNE 2007)

DIST	COUNTY	ROUTE	POST MILES TOTAL PROJECT	SHEET No	TOTAL SHEETS
03	Yol,Sac	80	R10.9/R11.7, M0.0/M10.4	592	1012

CERTIFIED ENGINEERING GEOLOGIST 10-30-08

9-7-10
PLANS APPROVAL DATE

PROFESSIONAL GEOLOGIST Reid Buell No. 1481 Exp. 4-30-09 CERTIFIED ENGINEERING GEOLOGIST STATE OF CALIFORNIA

The State of California or its officers or agents shall not be responsible for the accuracy or completeness of electronic copies of this plan sheet.

GROUP SYMBOLS AND NAMES

Graphic/Symbol	Group Names	Graphic/Symbol	Group Names
GW	Well-graded GRAVEL Well-graded GRAVEL with SAND	CL	Lean CLAY Lean CLAY with SAND Lean CLAY with GRAVEL SANDY lean CLAY SANDY lean CLAY with GRAVEL GRAVELLY lean CLAY GRAVELLY lean CLAY with SAND
GP	Poorly graded GRAVEL Poorly graded GRAVEL with SAND		
GW-GM	Well-graded GRAVEL with SILT Well-graded GRAVEL with SILT and SAND	CL-ML	SILTY CLAY SILTY CLAY with SAND SILTY CLAY with GRAVEL SANDY SILTY CLAY SANDY SILTY CLAY with GRAVEL GRAVELLY SILTY CLAY GRAVELLY SILTY CLAY with SAND
GW-GC	Well-graded GRAVEL with CLAY (or SILTY CLAY) Well-graded GRAVEL with CLAY and SAND (or SILTY CLAY and SAND)		
GP-GM	Poorly graded GRAVEL with SILT Poorly graded GRAVEL with SILT and SAND	ML	SILT SILT with SAND SILT with GRAVEL SANDY SILT SANDY SILT with GRAVEL GRAVELLY SILT GRAVELLY SILT with SAND
GP-GC	Poorly graded GRAVEL with CLAY (or SILTY CLAY) Poorly graded GRAVEL with CLAY and SAND (or SILTY CLAY and SAND)		
GM	SILTY GRAVEL SILTY GRAVEL with SAND	OL	ORGANIC lean CLAY ORGANIC lean CLAY with SAND ORGANIC lean CLAY with GRAVEL SANDY ORGANIC lean CLAY SANDY ORGANIC lean CLAY with GRAVEL GRAVELLY ORGANIC lean CLAY GRAVELLY ORGANIC lean CLAY with SAND
GC	CLAYEY GRAVEL CLAYEY GRAVEL with SAND		
GC-GM	SILTY, CLAYEY GRAVEL SILTY, CLAYEY GRAVEL with SAND	OL	ORGANIC SILT ORGANIC SILT with SAND ORGANIC SILT with GRAVEL SANDY ORGANIC SILT SANDY ORGANIC SILT with GRAVEL GRAVELLY ORGANIC SILT GRAVELLY ORGANIC SILT with SAND
SW	Well-graded SAND Well-graded SAND with GRAVEL		
SP	Poorly graded SAND Poorly graded SAND with GRAVEL	CH	Fat CLAY Fat CLAY with SAND Fat CLAY with GRAVEL SANDY fat CLAY SANDY fat CLAY with GRAVEL GRAVELLY fat CLAY GRAVELLY fat CLAY with SAND
SW-SM	Well-graded SAND with SILT Well-graded SAND with SILT and GRAVEL		
SW-SC	Well-graded SAND with CLAY (or SILTY CLAY) Well-graded SAND with CLAY and GRAVEL (or SILTY CLAY and GRAVEL)	MH	Elastic SILT Elastic SILT with SAND Elastic SILT with GRAVEL SANDY elastic SILT SANDY elastic SILT with GRAVEL GRAVELLY elastic SILT GRAVELLY elastic SILT with SAND
SP-SM	Poorly graded SAND with SILT Poorly graded SAND with SILT and GRAVEL		
SP-SC	Poorly graded SAND with CLAY (or SILTY CLAY) Poorly graded SAND with CLAY and GRAVEL (or SILTY CLAY and GRAVEL)	OH	ORGANIC fat CLAY ORGANIC fat CLAY with SAND ORGANIC fat CLAY with GRAVEL SANDY ORGANIC fat CLAY SANDY ORGANIC fat CLAY with GRAVEL GRAVELLY ORGANIC fat CLAY GRAVELLY ORGANIC fat CLAY with SAND
SM	SILTY SAND SILTY SAND with GRAVEL		
SC	CLAYEY SAND CLAYEY SAND with GRAVEL	OH	ORGANIC elastic SILT ORGANIC elastic SILT with SAND ORGANIC elastic SILT with GRAVEL SANDY ORGANIC elastic SILT SANDY ORGANIC elastic SILT with GRAVEL GRAVELLY ORGANIC elastic SILT GRAVELLY ORGANIC elastic SILT with SAND
SC-SM	SILTY, CLAYEY SAND SILTY, CLAYEY SAND with GRAVEL		
PT	PEAT	OL/OH	ORGANIC SOIL ORGANIC SOIL with SAND ORGANIC SOIL with GRAVEL SANDY ORGANIC SOIL SANDY ORGANIC SOIL with GRAVEL GRAVELLY ORGANIC SOIL GRAVELLY ORGANIC SOIL with SAND
	COBBLES COBBLES and BOULDERS BOULDERS		

FIELD AND LABORATORY TESTING

- (C) Consolidation (ASTM D 2435)
- (CL) Collapse Potential (ASTM D 5333)
- (CP) Compaction Curve (CTM 216)
- (CR) Corrosivity Testing (CTM 643, CTM 422, CTM 417)
- (CU) Consolidated Undrained Triaxial (ASTM D 4767)
- (DS) Direct Shear (ASTM D 3080)
- (EI) Expansion Index (ASTM D 4829)
- (M) Moisture Content (ASTM D 2216)
- (OC) Organic Content-% (ASTM D 2974)
- (P) Permeability (CTM 220)
- (PA) Particle Size Analysis (ASTM D 422)
- (PI) Plasticity Index (AASHTO T 90) Liquid Limit (AASHTO T 89)
- (PL) Point Load Index (ASTM D 5731)
- (PM) Pressure Meter
- (PP) Pocket Penetrometer
- (R) R-Value (CTM 301)
- (SE) Sand Equivalent (CTM 217)
- (SG) Specific Gravity (AASHTO T 100)
- (SL) Shrinkage Limit (ASTM D 427)
- (SW) Swell Potential (ASTM D 4546)
- (TV) Pocket Torvane
- (UC) Unconfined Compression-Soil (ASTM D 2166) Unconfined Compression-Rock (ASTM D 2938)
- (UU) Unconsolidated Undrained Triaxial (ASTM D 2850)
- (UW) Unit Weight (ASTM D 4767)
- (VS) Vane Shear (AASHTO T 223)

APPARENT DENSITY OF COHESIONLESS SOILS

Description	SPT N_{60} (Blows / 12 inches)
Very loose	0 - 4
Loose	5 - 10
Medium Dense	11 - 30
Dense	31 - 50
Very Dense	> 50

MOISTURE

Description	Criteria
Dry	Absence of moisture, dusty, dry to the touch
Moist	Damp but no visible water
Wet	Visible free water, usually soil is below water table

PERCENT OR PROPORTION OF SOILS

Description	Criteria
Trace	Particles are present but estimated to be less than 5%
Few	5 to 10%
Little	15 to 25%
Some	30 to 45%
Mostly	50 to 100%

PARTICLE SIZE

Description		Size
Boulder		> 12"
Cobble		3" to 12"
Gravel	Coarse	3/4" to 3"
	Fine	No. 4 to 3/4"
Sand	Coarse	No. 10 to No. 4
	Medium	No. 40 to No. 10
	Fine	No. 200 to No. 40

ENGINEERING SERVICES

GEOTECHNICAL SERVICES
PREPARED BY: I. G-Remmen, 8/08

STATE OF CALIFORNIA DEPARTMENT OF TRANSPORTATION

DIVISION OF ENGINEERING SERVICES STRUCTURE DESIGN
DESIGN BRANCH

BRIDGE NO.
POST MILES

SOUND WALL NO. 2
LOG OF TEST BORINGS 3 OF 4

OGS CIVIL LOG OF TEST BORINGS SHEET

ORIGINAL SCALE IN INCHES FOR REDUCED PLANS 0 1 2 3

CU 03
EA 379701

DISREGARD PRINTS BEARING EARLIER REVISION DATES 10-30-08

REVISION DATES | SHEET | OF

FILE => 337970rbsw2-3of4.dgn

USERNAME => trpierce DATE PLOTTED => 04-FEB-2011 TIME PLOTTED => 11:23

FED. ROAD DIV. No.	STATE	F. A. PROJECT No.	SHEET No.	TOTAL SHEETS
7	CALIF.			

DIST.	COUNTY	ROUTE	SECTION	SHEET No.	TOTAL SHEETS
03	Sac	880	2-Mar 71	312	375

DISTRICT ENGINEER—CIVIL DESIGN

DATE APPROVED August 24, 1967

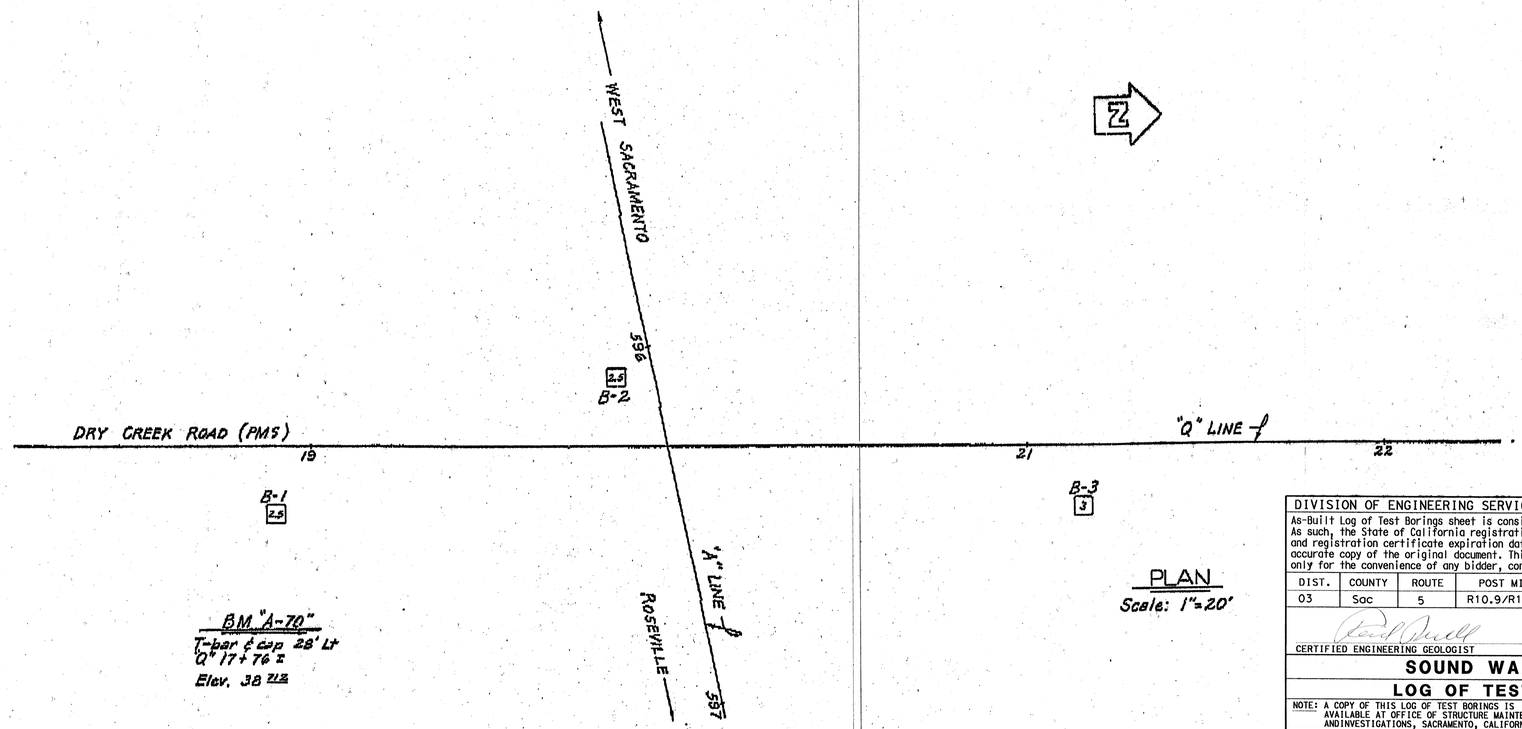

PLAN
Scale: 1"=20'

DIVISION OF ENGINEERING SERVICES - GEOTECHNICAL SERVICES					
As-Built Log of Test Borings sheet is considered an informational document only. As such, the State of California registration seal with signature, license number and registration certificate expiration date confirm that this is a true and accurate copy of the original document. This drawing is available and presented only for the convenience of any bidder, contractor or other interested party.					
DIST.	COUNTY	ROUTE	POST MILE-TOTAL PROJECT	Sheet No.	Total Sheets
03	Sac	5	R10.9/R11.7, M0.0/M10.4	593	1012
CERTIFIED ENGINEERING GEOLOGIST				DATE 10/30/09	

PROFESSIONAL GEOLOGIST
Reid Buell
No. 1481
Exp. 4-30-09
CERTIFIED ENGINEERING GEOLOGIST
STATE OF CALIFORNIA

SOUND WALL NO. 2

LOG OF TEST BORINGS 4 OF 4

NOTE: A COPY OF THIS LOG OF TEST BORINGS IS AVAILABLE AT OFFICE OF STRUCTURE MAINTENANCE AND INVESTIGATIONS, SACRAMENTO, CALIFORNIA

CU: 03
EA: 379701

BRIDGE No.

Sheet of

TO ACCOMPANY PLANS DATED 9-7-10

INFORMATION ON ACTUAL FOUNDATION CONDITIONS ENCOUNTERED IS ON FILE IN BRIDGE GEOLOGY SECTION

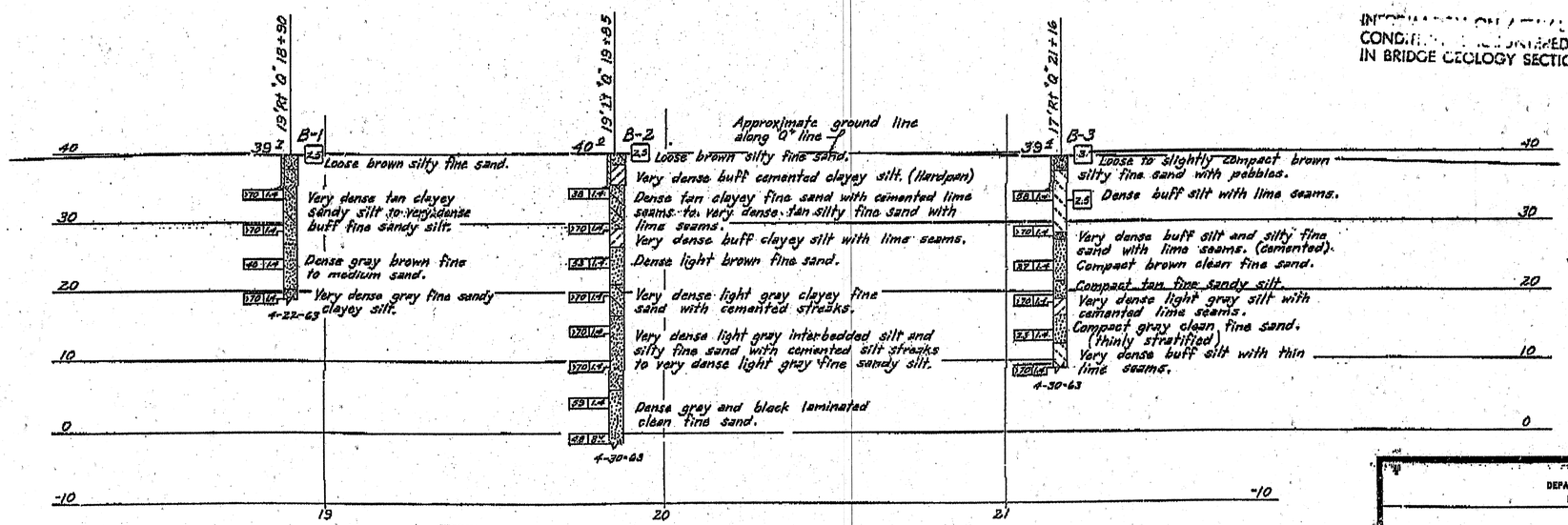

PROFILE
Scale: Horiz. 1"=20'
Vert. 1"=10'

NO GROUND WATER ENCOUNTERED DURING THIS INVESTIGATION BY BRIDGE DEPT. GEOLOGY SECTION
DATE April, 1963

SHEET	OF
15	15

STATE OF CALIFORNIA
DEPARTMENT OF PUBLIC WORKS
DIVISION OF HIGHWAYS

DRY CREEK ROAD OVERCROSSING

LOG OF TEST BORINGS

SCALE As Noted	BRIDGE 24-104	POST MILE 7.1	DRAWING 24104-21

Disregard prints bearing earlier numbers → PREL. DRAWING No. PR-24104-7 3/63 7/71 7/67

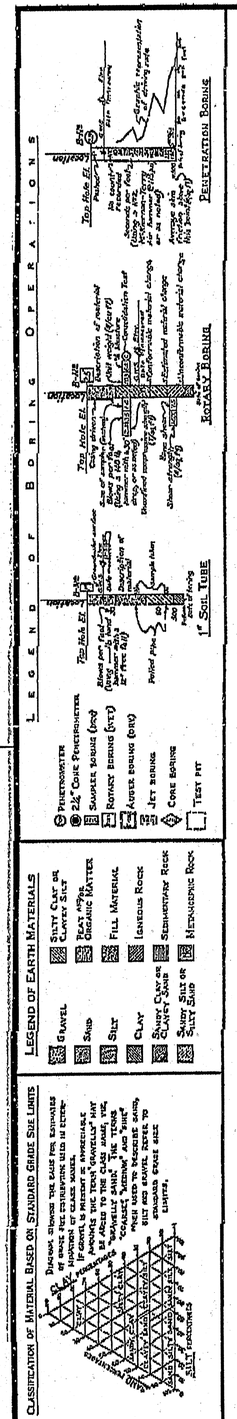

FIELD STUDY	By: S. Allison	4-63
DRAWN	By: K. Endow	5-14-63
CHECKED	By: D. Reynolds	5-28-63

Approved & recommended by: [signature] ENGINEER-GEOLOGIST

BRIDGE DEPARTMENT
ENGINEERING GEOLOGY SECTION

312

AS BUILT PLANS
Contract No. 03-072-644
Date Completed 8-70
Document No. 30000961

337970rbsw2-4of4.tif

Dist	COUNTY	ROUTE	POST MILES TOTAL PROJECT	SHEET No.	TOTAL SHEETS
03	Yol,Sac	80	R10.9/R11.7, M0.0/M10.4	594	1012

REGISTERED CIVIL ENGINEER 6-15-10 DATE

9-7-10
PLANS APPROVAL DATE

REGISTERED PROFESSIONAL ENGINEER A. Y. FONG No. 64343 Exp 6-30-11 CIVIL STATE OF CALIFORNIA

THE STATE OF CALIFORNIA OR ITS OFFICERS OR AGENTS SHALL NOT BE RESPONSIBLE FOR THE ACCURACY OR COMPLETENESS OF SCANNED COPIES OF THIS PLAN SHEET.

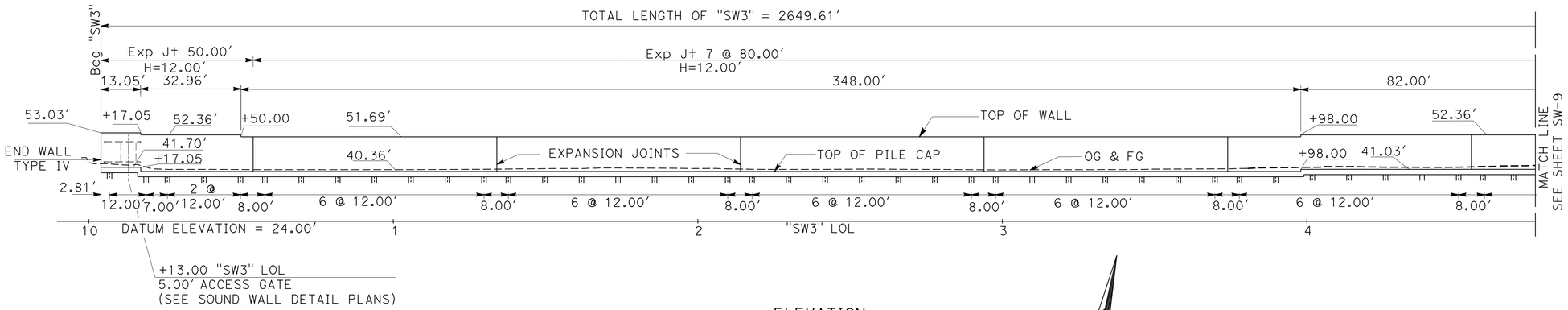

ELEVATION

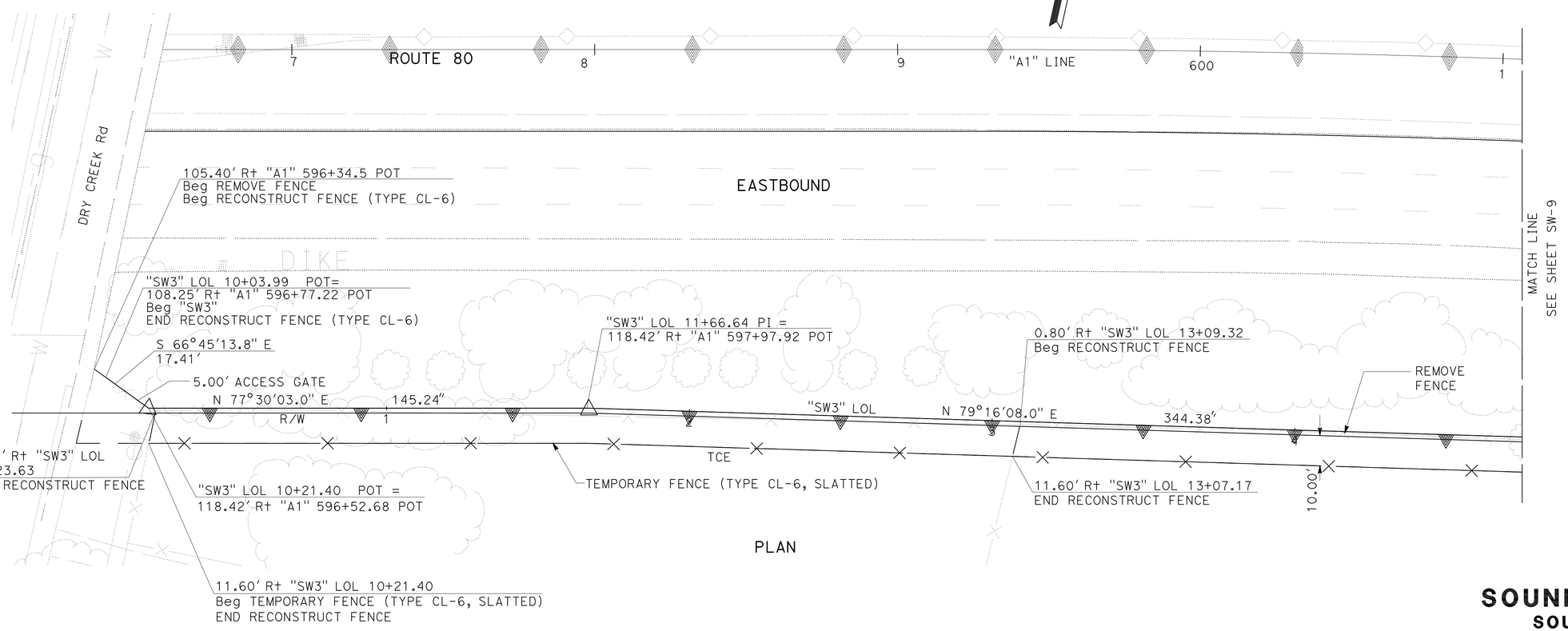

PLAN

SOUND WALL PLAN

SOUND WALL No. 3

SCALE: 1" = 20'

SW-8

THIS PLAN ACCURATE FOR SOUND WALL WORK ONLY.

REVISED BY | DATE REVISED

A.S.RANDHAWA | AMY FONG

CALCULATED-DESIGNED BY | CHECKED BY

FUNCTIONAL SUPERVISOR: CYRUS HUI

STATE OF CALIFORNIA - DEPARTMENT OF TRANSPORTATION
Caltrans
NORTH REGION
OFFICE OF DESIGN SOUTH
DESIGN BRANCH S7

LAST REVISION 00-00-00 | DATE PLOTTED => 04-FEB-2011 | TIME PLOTTED => 11:23

Dist	COUNTY	ROUTE	POST MILES TOTAL PROJECT	SHEET No.	TOTAL SHEETS
03	Yol,Sac	80	R10.9/R11.7, M0.0/M10.4	595	1012

REGISTERED CIVIL ENGINEER 6-15-10 DATE

9-7-10
PLANS APPROVAL DATE

REGISTERED PROFESSIONAL ENGINEER A. Y. FONG No. 64343 Exp 6-30-11 CIVIL STATE OF CALIFORNIA

THE STATE OF CALIFORNIA OR ITS OFFICERS OR AGENTS SHALL NOT BE RESPONSIBLE FOR THE ACCURACY OR COMPLETENESS OF SCANNED COPIES OF THIS PLAN SHEET.

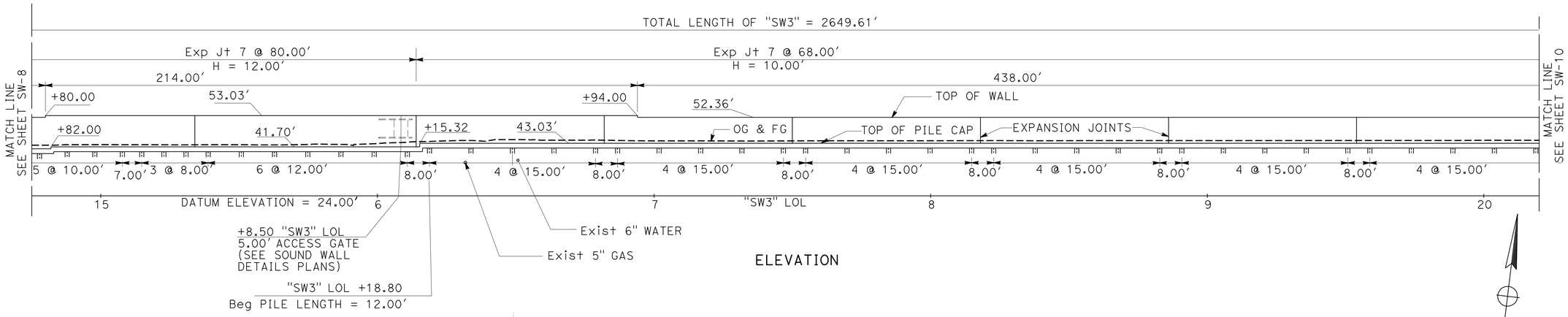

ELEVATION

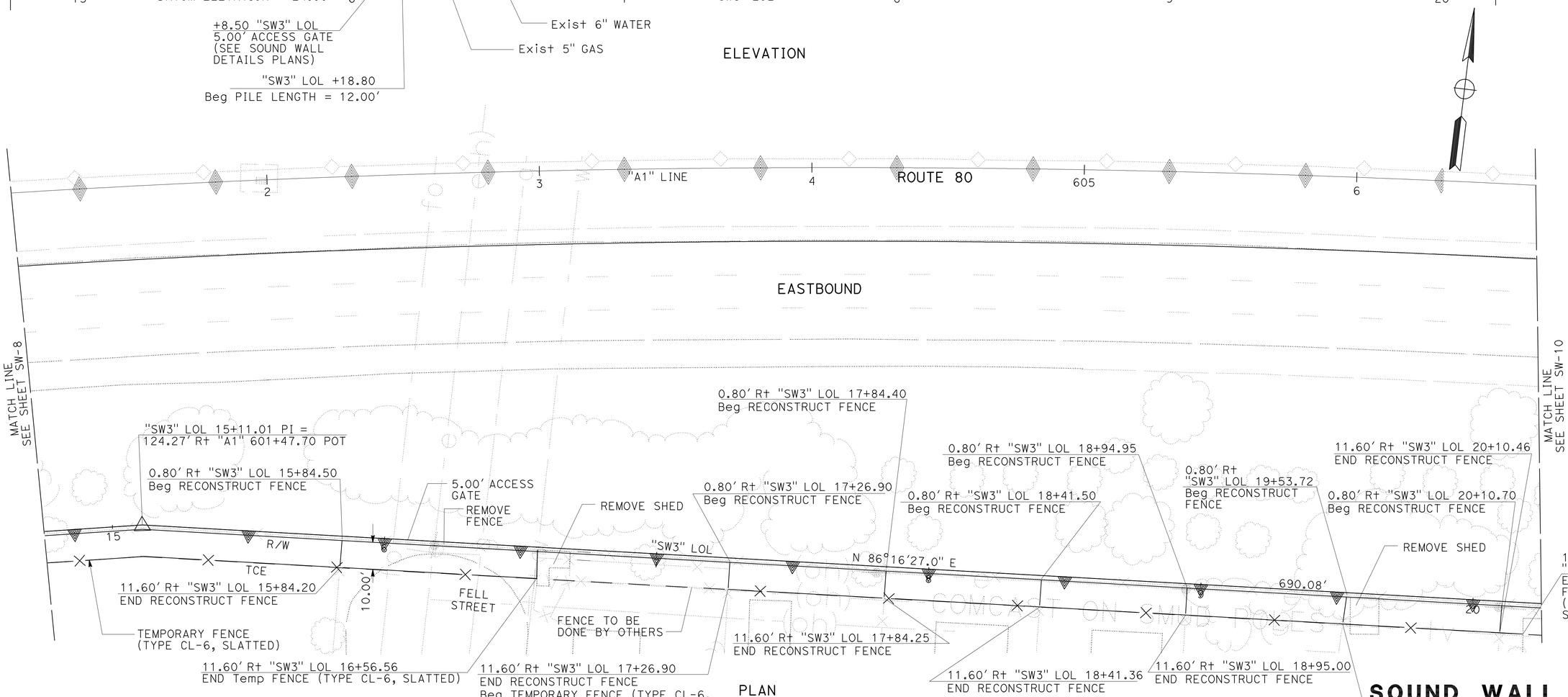

PLAN

THIS PLAN ACCURATE FOR SOUND WALL WORK ONLY.

SOUND WALL PLAN
SOUND WALL No. 3
SCALE: 1" = 20'

SW-9

STATE OF CALIFORNIA - DEPARTMENT OF TRANSPORTATION
Caltrans
NORTH REGION
OFFICE OF DESIGN SOUTH
DESIGN BRANCH S7

FUNCTIONAL SUPERVISOR: CYRUS HUI
CALCULATED-DESIGNED BY: A.S.RANDHAWA
CHECKED BY: AMY FONG
REVISED BY / DATE REVISED

LAST REVISION 00-00-00 | DATE PLOTTED => 04-FEB-2011 | TIME PLOTTED => 11:30

BORDER LAST REVISED 4/11/2008 | RELATIVE BORDER SCALE IS IN INCHES 0 1 2 3 | USERNAME => trpierce | DGN FILE => 33797urc009.dgn | CU 03255 | EA 3797U1

Dist	COUNTY	ROUTE	POST MILES TOTAL PROJECT	SHEET No.	TOTAL SHEETS
03	Yol,Sac	80	R10.9/R11.7, M0.0/M10.4	596	1012

REGISTERED CIVIL ENGINEER 6-15-10 DATE

9-7-10
PLANS APPROVAL DATE

REGISTERED PROFESSIONAL ENGINEER A. Y. FONG No. 64343 Exp 6-30-11 CIVIL STATE OF CALIFORNIA

THE STATE OF CALIFORNIA OR ITS OFFICERS OR AGENTS SHALL NOT BE RESPONSIBLE FOR THE ACCURACY OR COMPLETENESS OF SCANNED COPIES OF THIS PLAN SHEET.

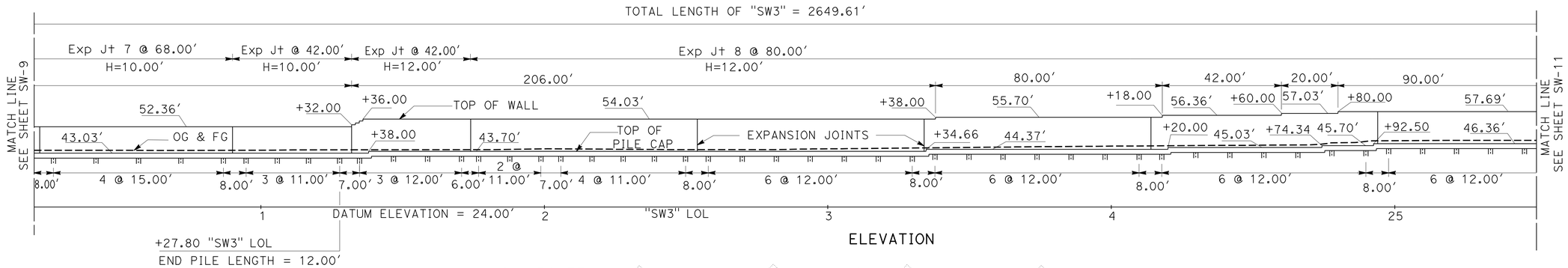

ELEVATION

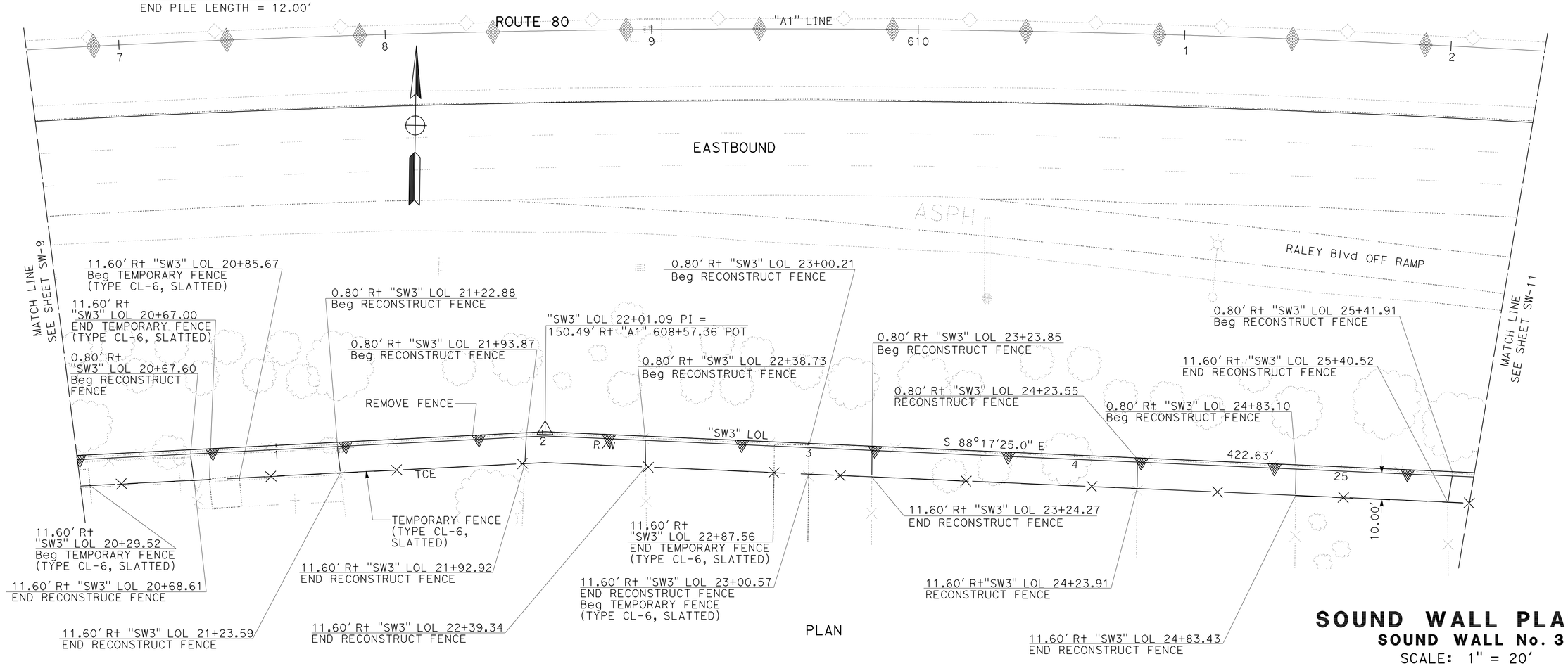

PLAN

THIS PLAN ACCURATE FOR SOUND WALL WORK ONLY.

SOUND WALL PLAN

SOUND WALL No. 3

SCALE: 1" = 20'

SW-10

REVISED BY | DATE REVISED
A.S.RANDHAWA | AMY FONG
CALCULATED-DESIGNED BY | CHECKED BY
FUNCTIONAL SUPERVISOR
CYRUS HUI

STATE OF CALIFORNIA - DEPARTMENT OF TRANSPORTATION
Caltrans®
NORTH REGION
OFFICE OF DESIGN SOUTH
DESIGN BRANCH S7

LAST REVISION 00-00-00 | DATE PLOTTED => 04-FEB-2011 | TIME PLOTTED => 11:23

Dist	COUNTY	ROUTE	POST MILES TOTAL PROJECT	SHEET No.	TOTAL SHEETS
03	Yol,Sac	80	R10.9/R11.7, M0.0/M10.4	597	1012

REGISTERED CIVIL ENGINEER 6-15-10 DATE

9-7-10
PLANS APPROVAL DATE

REGISTERED PROFESSIONAL ENGINEER A. Y. FONG No. 64343 Exp 6-30-11 CIVIL STATE OF CALIFORNIA

THE STATE OF CALIFORNIA OR ITS OFFICERS OR AGENTS SHALL NOT BE RESPONSIBLE FOR THE ACCURACY OR COMPLETENESS OF SCANNED COPIES OF THIS PLAN SHEET.

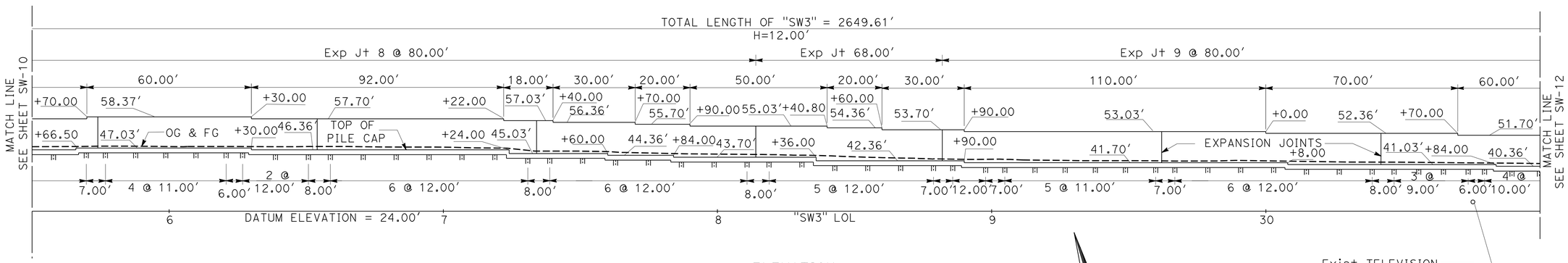

ELEVATION

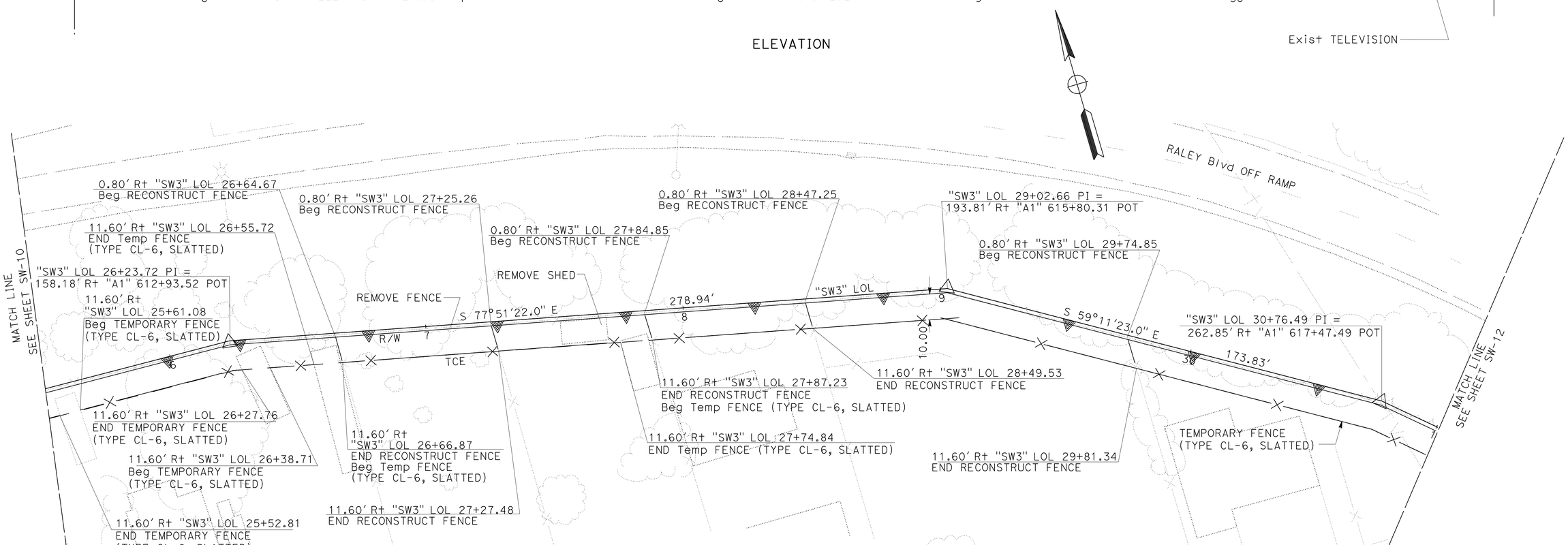

PLAN

SOUND WALL PLAN

SOUND WALL No. 3

SCALE: 1" = 20'

SW-11

THIS PLAN ACCURATE FOR SOUND WALL WORK ONLY.

STATE OF CALIFORNIA - DEPARTMENT OF TRANSPORTATION
Caltrans
NORTH REGION
OFFICE OF DESIGN SOUTH
DESIGN BRANCH S7

FUNCTIONAL SUPERVISOR: CYRUS HUI

CALCULATED-DESIGNED BY: A.S.RANDHAWA
CHECKED BY: AMY FONG

REVISED BY
DATE REVISED

LAST REVISION 00-00-00
DATE PLOTTED => 04-FEB-2011
TIME PLOTTED => 11:23

Dist	COUNTY	ROUTE	POST MILES TOTAL PROJECT	SHEET No.	TOTAL SHEETS
03	Yol,Sac	80	R10.9/R11.7, M0.0/M10.4	598	1012

REGISTERED CIVIL ENGINEER 6-15-10 DATE

9-7-10
PLANS APPROVAL DATE

REGISTERED PROFESSIONAL ENGINEER A. Y. FONG No. 64343 Exp 6-30-11 CIVIL STATE OF CALIFORNIA

THE STATE OF CALIFORNIA OR ITS OFFICERS OR AGENTS SHALL NOT BE RESPONSIBLE FOR THE ACCURACY OR COMPLETENESS OF SCANNED COPIES OF THIS PLAN SHEET.

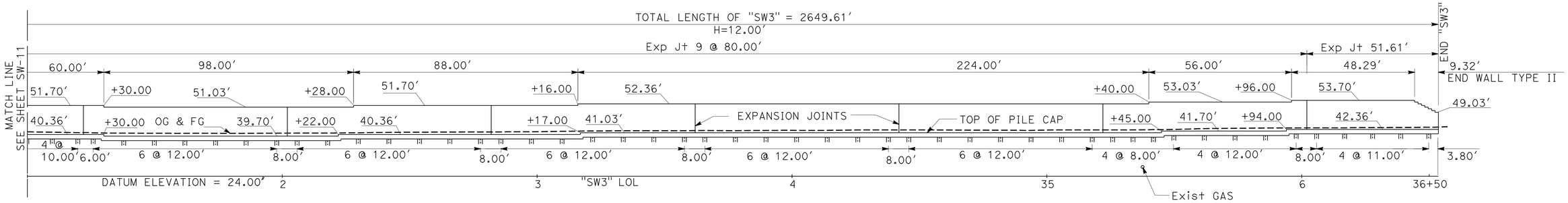

ELEVATION

CURVE DATA

No.	R	Δ	T	L
1	178.41'	33°42'22"	54.04'	104.95'

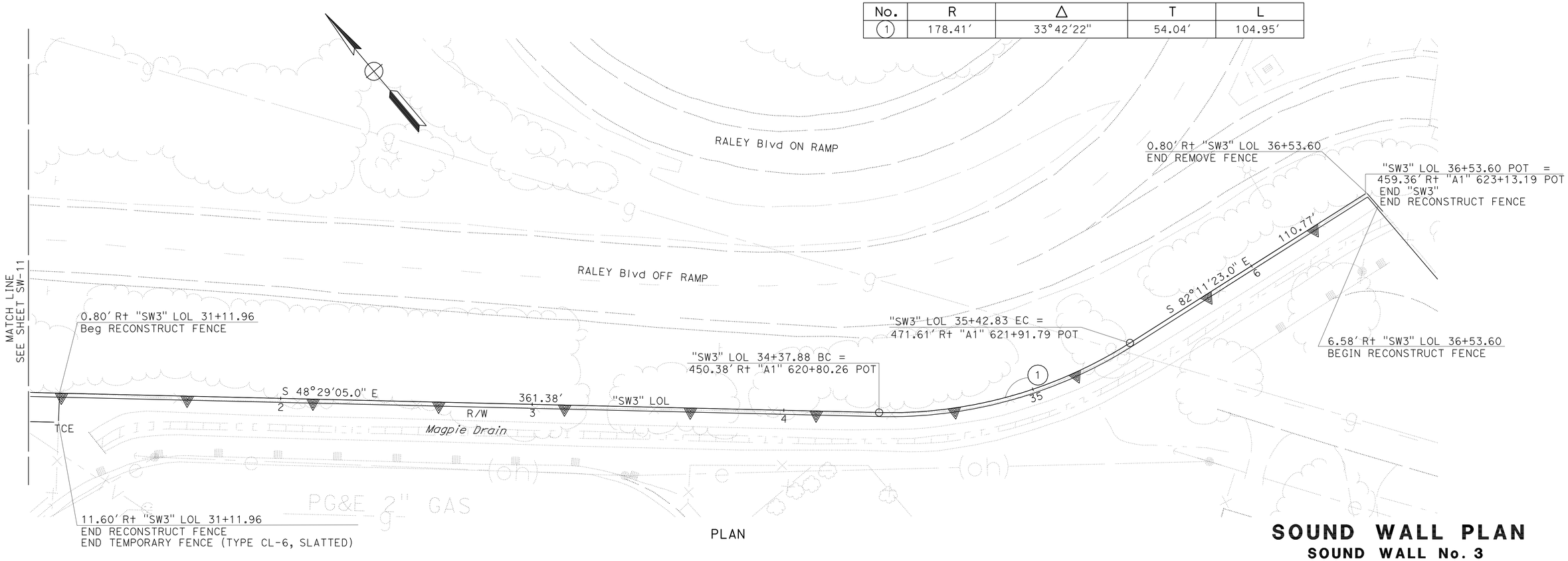

PLAN

THIS PLAN ACCURATE FOR SOUND WALL WORK ONLY.

SOUND WALL PLAN

SOUND WALL No. 3

SCALE: 1" = 20'

SW-12

STATE OF CALIFORNIA - DEPARTMENT OF TRANSPORTATION
Caltrans
NORTH REGION
OFFICE OF DESIGN SOUTH
DESIGN BRANCH S7

FUNCTIONAL SUPERVISOR: CYRUS HUI
CALCULATED-DESIGNED BY: A.S.RANDHAWA
CHECKED BY: AMY FONG
REVISED BY
DATE REVISED

LAST REVISION DATE PLOTTED => 04-FEB-2011
00-00-00 TIME PLOTTED => 11:23

DIST	COUNTY	ROUTE	POST MILES TOTAL PROJECT	SHEET No	TOTAL SHEETS
03	Yol,Sac	80	R10.9/R11.7, M0.0/M10.4	599	1012

Reid Buell 10-30-08
CERTIFIED ENGINEERING GEOLOGIST

9-7-10
PLANS APPROVAL DATE

The State of California or its officers or agents shall not be responsible for the accuracy or completeness of electronic copies of this plan sheet.

PROFESSIONAL GEOLOGIST
Reid Buell
No. 1481
Exp. 4-30-09
CERTIFIED ENGINEERING GEOLOGIST
STATE OF CALIFORNIA

This LOTB sheet was generally prepared in accordance with the Caltrans Soil & Rock Logging, Classification, and Presentation Manual (June 2007).

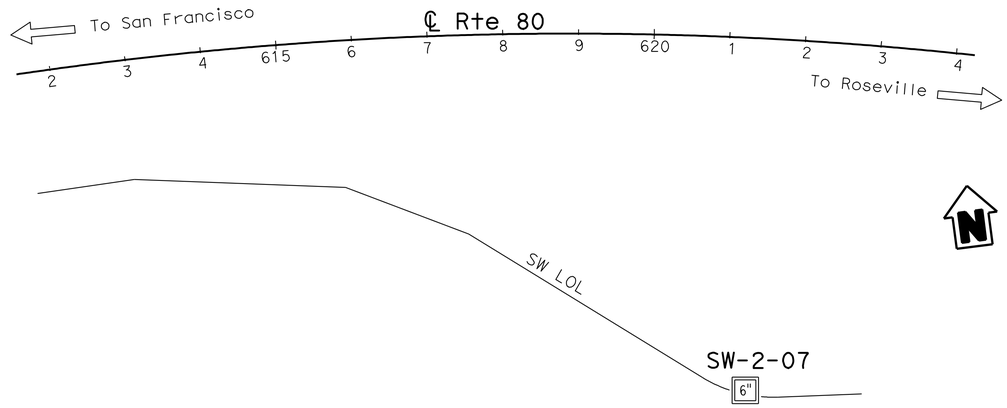

PLAN
1" = 100'

BENCH MARK

Approximate boring elevation was derived from District Survey maps.

NOTES:

1. Test boring was advanced using a hollow stem auger.
2. No ground water encountered during field investigation.
3. The descriptions and classifications of soil, including consistency and relative density descriptors, used by the field personnel for the exploration boreholes shown on these sheets are generally based on the "Soil and Rock Logging, Classification, and Presentation Manual," Division of Engineering Services, Geotechnical Services, (June 2007).
4. Soil colors were determined using Munsell Soil Color Charts (1994, Revised Edition).
5. Test boring utilized a Safety Hammer to advance the sampler using a 140 lb hammer with a 30 inch drop. The SPT N-values shown on the Log of Test Boring (LOTB) sheets were actual values recorded in the field. The relative/apparent density descriptors shown on the LOTB sheets are based on the actual SPT N-values recorded in the field. Consistency descriptors shown on the LOTB sheets are based on the actual SPT N-values or the pocket penetrometer readings.
6. E = Blow count for 1.0 foot penetration extrapolated from blow count for less than 1.0 foot (due to change in material or hard driving).

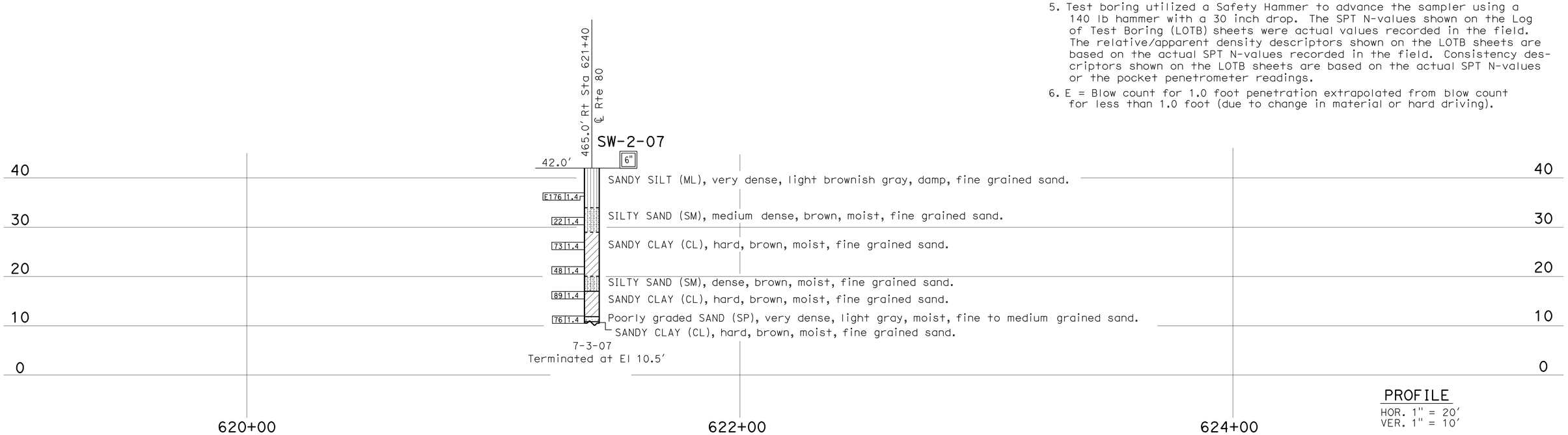

PROFILE
HOR. 1" = 20'
VER. 1" = 10'

ENGINEERING SERVICES	GEOTECHNICAL SERVICES	STATE OF CALIFORNIA DEPARTMENT OF TRANSPORTATION	DIVISION OF ENGINEERING SERVICES STRUCTURE DESIGN	BRIDGE NO.	SOUND WALL NO. 3
FUNCTIONAL SUPERVISOR	DRAWN BY: I. G-Remmen, 8/08	FIELD INVESTIGATION BY:	DESIGN BRANCH	POST MILES	LOG OF TEST BORINGS 1 OF 5
NAME: Roy Bibbens	CHECKED BY: J. Martin	J. Martin			

OGS CIVIL LOG OF TEST BORINGS SHEET

ORIGINAL SCALE IN INCHES FOR REDUCED PLANS 0 1 2 3

CU 03
EA 379701

DISREGARD PRINTS BEARING EARLIER REVISION DATES → 10-30-08

REVISION DATES | SHEET | OF

FILE => 337970rcsw3-1of5.dgn

USERNAME => trpierce DATE PLOTTED => 04-FEB-2011 TIME PLOTTED => 11:23

REFERENCE: CALTRANS SOIL & ROCK LOGGING, CLASSIFICATION, AND PRESENTATION MANUAL (JUNE 2007)

DIST	COUNTY	ROUTE	POST MILES TOTAL PROJECT	SHEET No	TOTAL SHEETS
03	Yol,Sac	80	R10.9/R11.7, M0.0/M10.4	600	1012

10-30-08
CERTIFIED ENGINEERING GEOLOGIST

9-7-10
PLANS APPROVAL DATE

PROFESSIONAL GEOLOGIST Reid Buell No. 1481 Exp. 4-30-09 CERTIFIED ENGINEERING GEOLOGIST STATE OF CALIFORNIA

The State of California or its officers or agents shall not be responsible for the accuracy or completeness of electronic copies of this plan sheet.

CEMENTATION

Description	Criteria
Weak	Crumbles or breaks with handling or little finger pressure.
Moderate	Crumbles or breaks with considerable finger pressure.
Strong	Will not crumble or break with finger pressure.

CONSISTENCY OF COHESIVE SOILS

Description	Unconfined Compressive Strength (tsf)	Pocket Penetrometer Measurement (tsf)	Torvane Measurement (tsf)	Field Approximation
Very Soft	< 0.25	< 0.25	< 0.12	Easily penetrated several inches by fist
Soft	0.25 to 0.50	0.25 to 0.50	0.12 to 0.25	Easily penetrated several inches by thumb
Medium Stiff	0.50 to 1.0	0.50 to 1.0	0.25 to 0.50	Penetrated several inches by thumb with moderate effort
Stiff	1 to 2	1 to 2	0.50 to 1.0	Readily indented by thumb but penetrated only with great effort
Very Stiff	2 to 4	2 to 4	1.0 to 2.0	Readily indented by thumbnail
Hard	> 4.0	> 4.0	> 2.0	Indented by thumbnail with difficulty

BOREHOLE IDENTIFICATION

Symbol	Hole Type	Description
Size	A	Auger Boring
Size	R P	Rotary drilled boring Rotary percussion boring (air)
Size	R	Rotary drilled diamond core
Size	HD HA	Hand driven (1-inch soil tube) Hand Auger
●	D	Dynamic Cone Penetration Boring
▲	CPT	Cone Penetration Test (ASTM D 5778-95)
⬚	O	Other

Note: Size in inches.

PLASTICITY OF FINE-GRAINED SOILS

Description	Criteria
Nonplastic	A 1/8-inch thread cannot be rolled at any water content.
Low	The thread can barely be rolled and the lump cannot be formed when drier than the plastic limit.
Medium	The thread is easy to roll and not much time is required to reach the plastic limit. The thread cannot be rerolled after reaching the plastic limit. The lump crumbles when drier than the plastic limit.
High	It takes considerable time rolling and kneading to reach the plastic limit. The thread can be rerolled several times after reaching the plastic limit. The lump can be formed without crumbling when drier than the plastic limit.

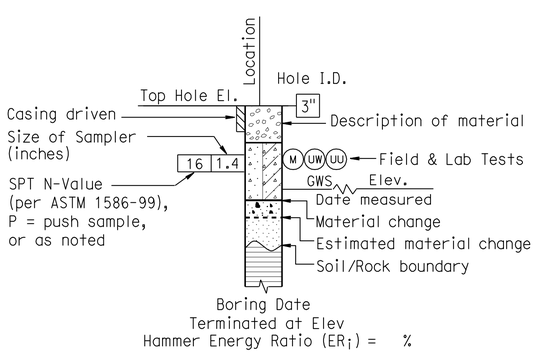

ROTARY BORING

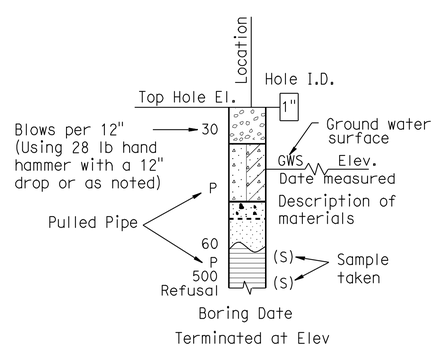

HAND BORING

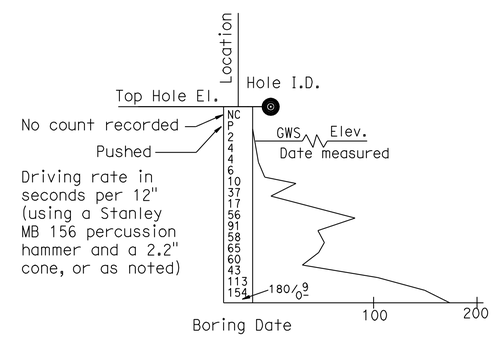

DYNAMIC CONE PENETRATION BORING

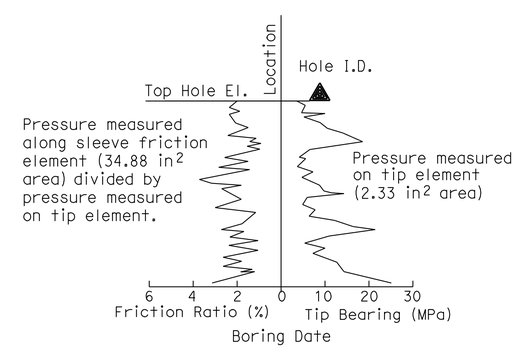

CONE PENETRATION TEST (CPT) SOUNDING

ENGINEERING SERVICES	GEOTECHNICAL SERVICES	STATE OF CALIFORNIA DEPARTMENT OF TRANSPORTATION	DIVISION OF ENGINEERING SERVICES STRUCTURE DESIGN DESIGN BRANCH	BRIDGE NO. / POST MILES	SOUND WALL NO. 3 LOG OF TEST BORINGS 2 OF 5
	PREPARED BY: I. G-Remmen, 8/08				

OGS CIVIL LOG OF TEST BORINGS SHEET

ORIGINAL SCALE IN INCHES FOR REDUCED PLANS 0 1 2 3

CU 03
EA 379701

DISREGARD PRINTS BEARING EARLIER REVISION DATES 10-30-08

REVISION DATES | SHEET | OF

FILE => 337970rcsw3-2of5.dgn

USERNAME => tripierce DATE PLOTTED => 04-FEB-2011 TIME PLOTTED => 11:24