Dist	COUNTY	ROUTE	POST MILES TOTAL PROJECT	SHEET No.	TOTAL SHEETS
02	Tri	299	36.9/53.5	1	165

STATE OF CALIFORNIA

DEPARTMENT OF TRANSPORTATION

ACSTP-P299(189)E

PROJECT PLANS FOR CONSTRUCTION ON

STATE HIGHWAY

IN TRINITY COUNTY AT AND NEAR JUNCTION CITY AND WEAVERVILLE FROM NORTH FORK TRINITY RIVER BRIDGE TO 0.1 MILE EAST OF INDUSTRIAL PARKWAY

TO BE SUPPLEMENTED BY STANDARD PLANS DATED MAY 2010

INDEX OF PLANS

SHEET	DESCRIPTION
1	TITLE SHEET AND LOCATION MAP
2-3	TYPICAL CROSS SECTIONS
4	KEY MAP AND LINE INDEX
5-56	CONSTRUCTION DETAILS
57-74	DRAINAGE PLANS, PROFILES, DETAILS AND QUANTITIES
75-84	UTILITY PLANS, DETAILS AND QUANTITIES
85	CONSTRUCTION AREA SIGNS
86-95	PAVEMENT DELINEATION PLANS, DETAILS AND QUANTITIES
96-105	SIGN PLANS
106-109	SUMMARY OF QUANTITIES
110-111	EROSION CONTROL
112-122	ELECTRICAL PLANS
123-163	REVISED STANDARD PLANS

STRUCTURES

164-165	STRUCTURE PLANS

THE STANDARD PLANS LIST APPLICABLE TO THIS CONTRACT IS INCLUDED IN THE NOTICE TO BIDDERS AND SPECIAL PROVISIONS BOOK.

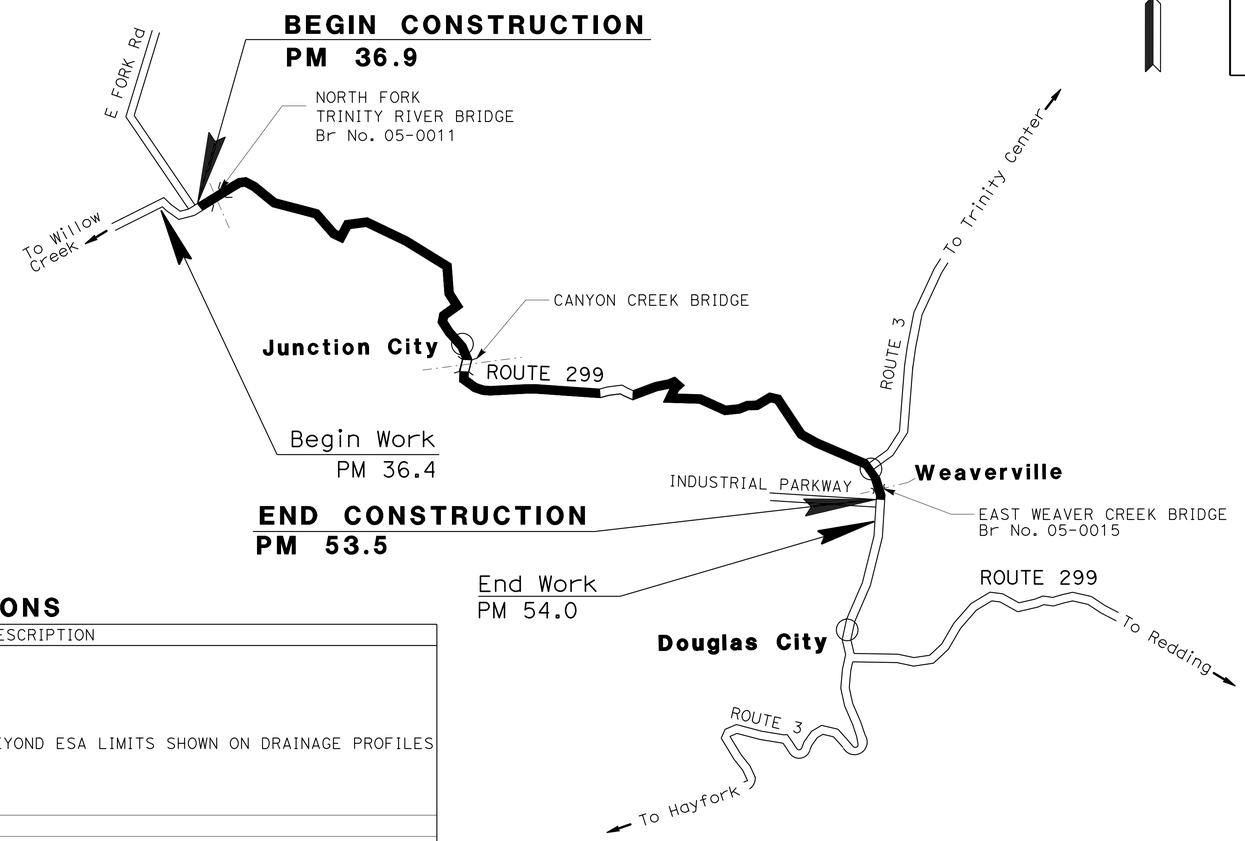

ESA LOCATIONS

DRAINAGE SYSTEM	DESCRIPTION
PM 37.80	NO WORK WILL BE PERFORMED BEYOND ESA LIMITS SHOWN ON DRAINAGE PROFILES
PM 38.64	
PM 39.08	
PM 39.16	
PM 39.32	
PM 43.76	
PM 51.03	
PM 52.14	
HISTORICAL DOWNTOWN	
PM 51.46 COURT St TO PM 51.80 BREMER St	NO WORK WILL BE PERFORMED WITHIN 0.5' OF EXISTING BUILDINGS
CURB RAMP	
PM 52.07: CURB RAMPS 25 & 31	NO WORK WILL BE PERFORMED BEYOND THE LIMITS OF EXISTING SIDEWALKS

THE CONTRACTOR SHALL POSSESS THE CLASS (OR CLASSES) OF LICENSE AS SPECIFIED IN THE "NOTICE TO BIDDERS."

NO SCALE

Heidi Borders 11-25-14
PROJECT ENGINEER DATE
REGISTERED CIVIL ENGINEER

November 26, 2014
PLANS APPROVAL DATE

REGISTERED PROFESSIONAL ENGINEER HEIDI E. BORDERS No. C64194 Exp. 6-30-15 CIVIL STATE OF CALIFORNIA

THE STATE OF CALIFORNIA OR ITS OFFICERS OR AGENTS SHALL NOT BE RESPONSIBLE FOR THE ACCURACY OR COMPLETENESS OF SCANNED COPIES OF THIS PLAN SHEET.

CONTRACT No.	02-3E7714
PROJECT ID	0215000046

PROJECT MANAGER: STEVE ROGERS
DESIGN ENGINEER: JULIE CASEY

P:\proj1\02\3E770_plans\pse\23e770ab001.dgn

LAST REVISION 11-25-14 DATE PLOTTED => 15-JAN-2015 TIME PLOTTED => 16:07

Dist	COUNTY	ROUTE	POST MILES TOTAL PROJECT	SHEET No.	TOTAL SHEETS
02	Tri	299	36.9/53.5	2	165

Heidi Borders 11-25-14
REGISTERED CIVIL ENGINEER DATE

11-26-14
PLANS APPROVAL DATE

REGISTERED PROFESSIONAL ENGINEER HEIDI E. BORDERS No. C64194 Exp. 6-30-15 CIVIL STATE OF CALIFORNIA

THE STATE OF CALIFORNIA OR ITS OFFICERS OR AGENTS SHALL NOT BE RESPONSIBLE FOR THE ACCURACY OR COMPLETENESS OF SCANNED COPIES OF THIS PLAN SHEET.

NOTES:

1. DIMENSIONS OF THE PAVEMENT STRUCTURES (STRUCTURAL SECTIONS) ARE SUBJECT TO TOLERANCES SPECIFIED IN THE STANDARD SPECIFICATIONS.
2. LOCATIONS OF REPLACE ASPHALT CONCRETE SURFACING TO BE DETERMINED IN THE FIELD BY THE ENGINEER.
3. FOR ACCURATE RIGHT OF WAY DATA, CONTACT RIGHT OF WAY ENGINEERING AT THE DISTRICT OFFICE.

DESIGN DESIGNATION:

ADT (2014)	4600	D	56%
ADT (2034)	6800	T	7%
DHV	700	V	55 MPH
ESAL	1933300	TI	9.5

CLIMATE REGION = LOW MOUNTAIN

LEGEND:

COLD PLANE AC PAVEMENT (CPACP)

ABBREVIATIONS:

PET	PAVEMENT EDGE TREATMENT (SAFETY EDGE)
CPACP	COLD PLANE ASPHALT CONCRETE PAVEMENT
(E)	EXISTING
RAC	RUBBERIZED ASPHALT CONCRETE

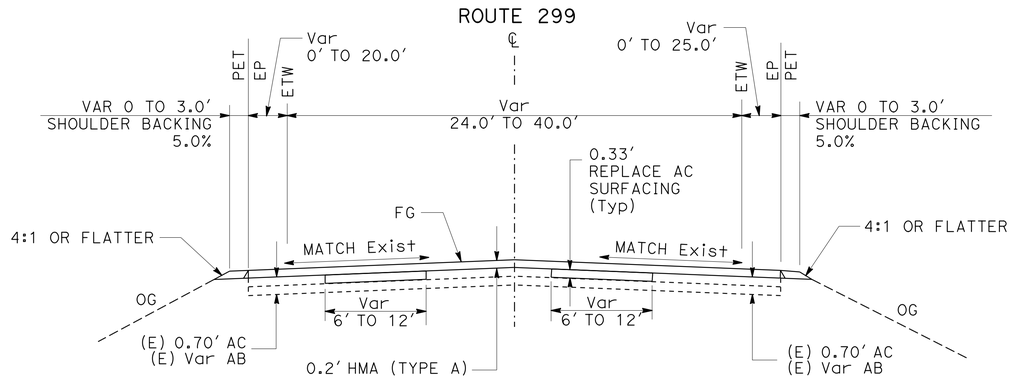

ROUTE 299
PM 43.50 TO PM 45.75
PM 46.00 TO PM 49.70
NOTE: NO WORK FROM PM 45.75 TO PM 46.00

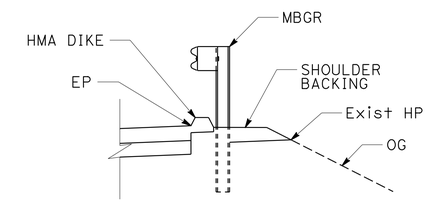

MBGR LOCATIONS
(SEE QUANTITY SHEET FOR PM LIMITS)

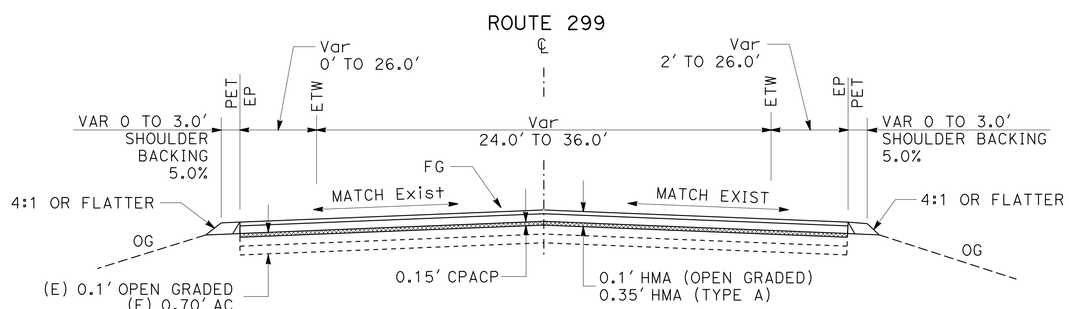

ROUTE 299
PM 38.80 TO PM 39.10

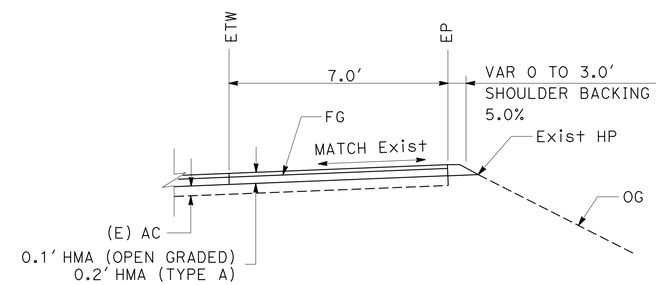

ADDITIONAL SHOULDER WIDTH LOCATIONS
PM 42.60 TO PM 42.68, WB

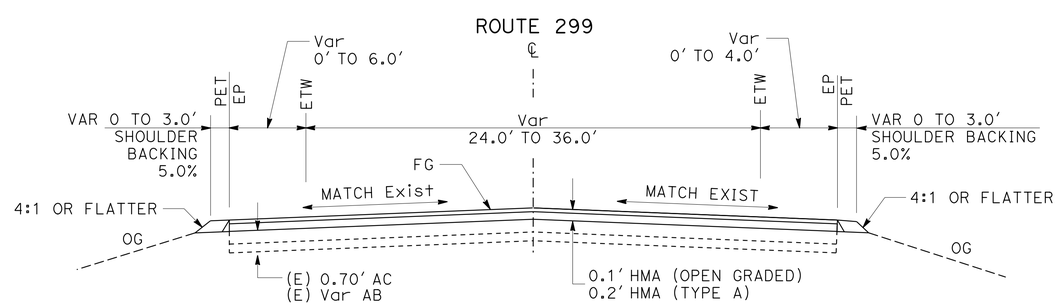

ROUTE 299
PM 36.93 EB TO PM 38.80
PM 39.10 TO PM 43.36 BB

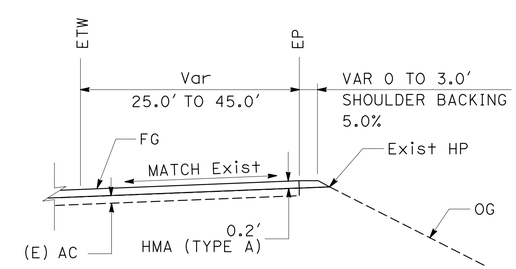

ADDITIONAL SHOULDER WIDTH LOCATIONS
PM 45.58 TO PM 45.75, EB
PM 46.81 TO PM 46.82, WB
PM 47.49 TO PM 47.56, EB

TYPICAL CROSS SECTIONS

NO SCALE

X-1

REVISED BY	DATE REVISED

CALCULATED-DESIGNED BY: JEANNIE STEFFAN
CHECKED BY: HEIDI BORDERS
FUNCTIONAL SUPERVISOR: JULIE CASEY

STATE OF CALIFORNIA - DEPARTMENT OF TRANSPORTATION
Caltrans DESIGN

P:\proj1\02\3E770_plans\pse\23e770ca001.dgn

LAST REVISION 11-25-14 | DATE PLOTTED => 15-JAN-2015 | TIME PLOTTED => 16:07

Dist	COUNTY	ROUTE	POST MILES TOTAL PROJECT	SHEET No.	TOTAL SHEETS
02	Tri	299	36.9/53.5	3	165

Heidi Borders 11-25-14
REGISTERED CIVIL ENGINEER DATE

11-26-14
PLANS APPROVAL DATE

REGISTERED PROFESSIONAL ENGINEER
HEIDI E. BORDERS
No. C64194
Exp. 6-30-15
CIVIL
STATE OF CALIFORNIA

THE STATE OF CALIFORNIA OR ITS OFFICERS OR AGENTS SHALL NOT BE RESPONSIBLE FOR THE ACCURACY OR COMPLETENESS OF SCANNED COPIES OF THIS PLAN SHEET.

NOTES:

1. FOR ACCURATE RIGHT OF WAY DATA, CONTACT RIGHT OF WAY ENGINEERING AT THE DISTRICT OFFICE.

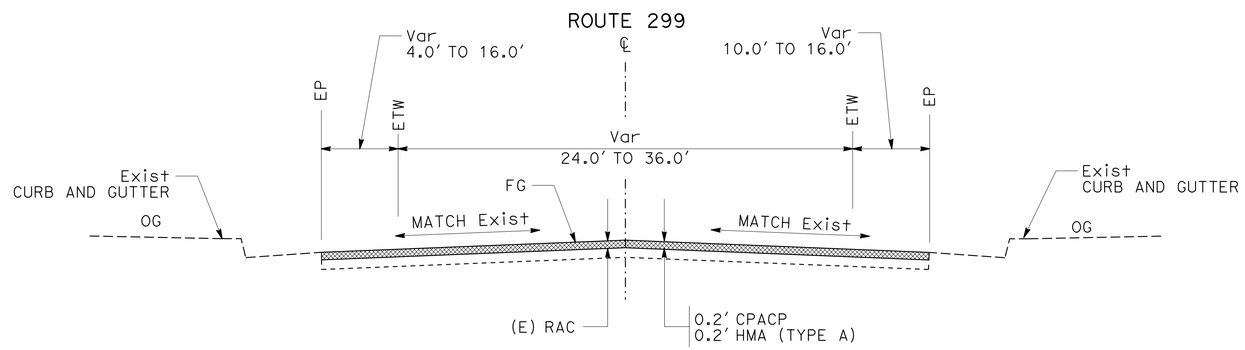

ROUTE 299
PM 51.30 TO PM 52.20

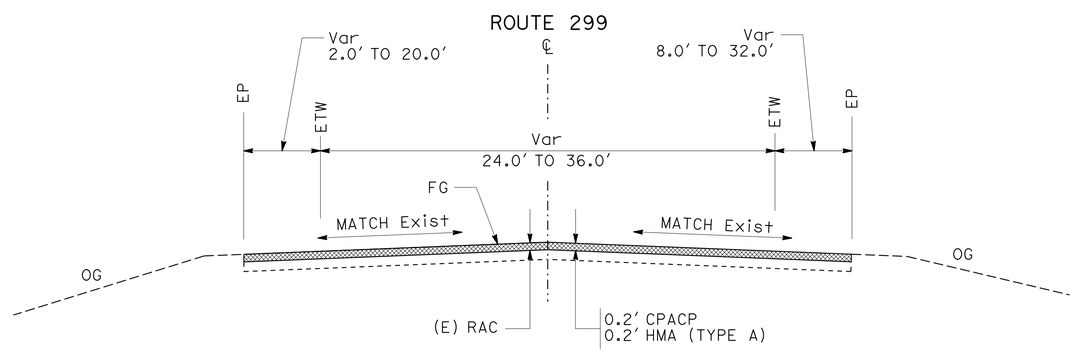

ROUTE 299
PM 43.40 EB TO PM 43.50
PM 49.70 TO PM 51.30
PM 52.20 TO PM 53.50

TYPICAL CROSS SECTIONS

NO SCALE

X-2

REVISED BY	DATE REVISED

CALCULATED-DESIGNED BY	CHECKED BY
JEANNIE STEFFAN	HEIDI BORDERS

FUNCTIONAL SUPERVISOR: JULIE CASEY

STATE OF CALIFORNIA - DEPARTMENT OF TRANSPORTATION
Caltrans® DESIGN

P:\proj1\02\3E770_plans\pse\23e770ca002.dgn

LAST REVISION 11-25-14 | DATE PLOTTED => 15-JAN-2015 | TIME PLOTTED => 16:07

Dist	COUNTY	ROUTE	POST MILES TOTAL PROJECT	SHEET No.	TOTAL SHEETS
02	Tri	299	36.9/53.5	4	165

Heidi Borders 11-25-14
REGISTERED CIVIL ENGINEER DATE

11-26-14
PLANS APPROVAL DATE

REGISTERED PROFESSIONAL ENGINEER
HEIDI E. BORDERS
No. C64194
Exp. 6-30-15
CIVIL
STATE OF CALIFORNIA

THE STATE OF CALIFORNIA OR ITS OFFICERS OR AGENTS SHALL NOT BE RESPONSIBLE FOR THE ACCURACY OR COMPLETENESS OF SCANNED COPIES OF THIS PLAN SHEET.

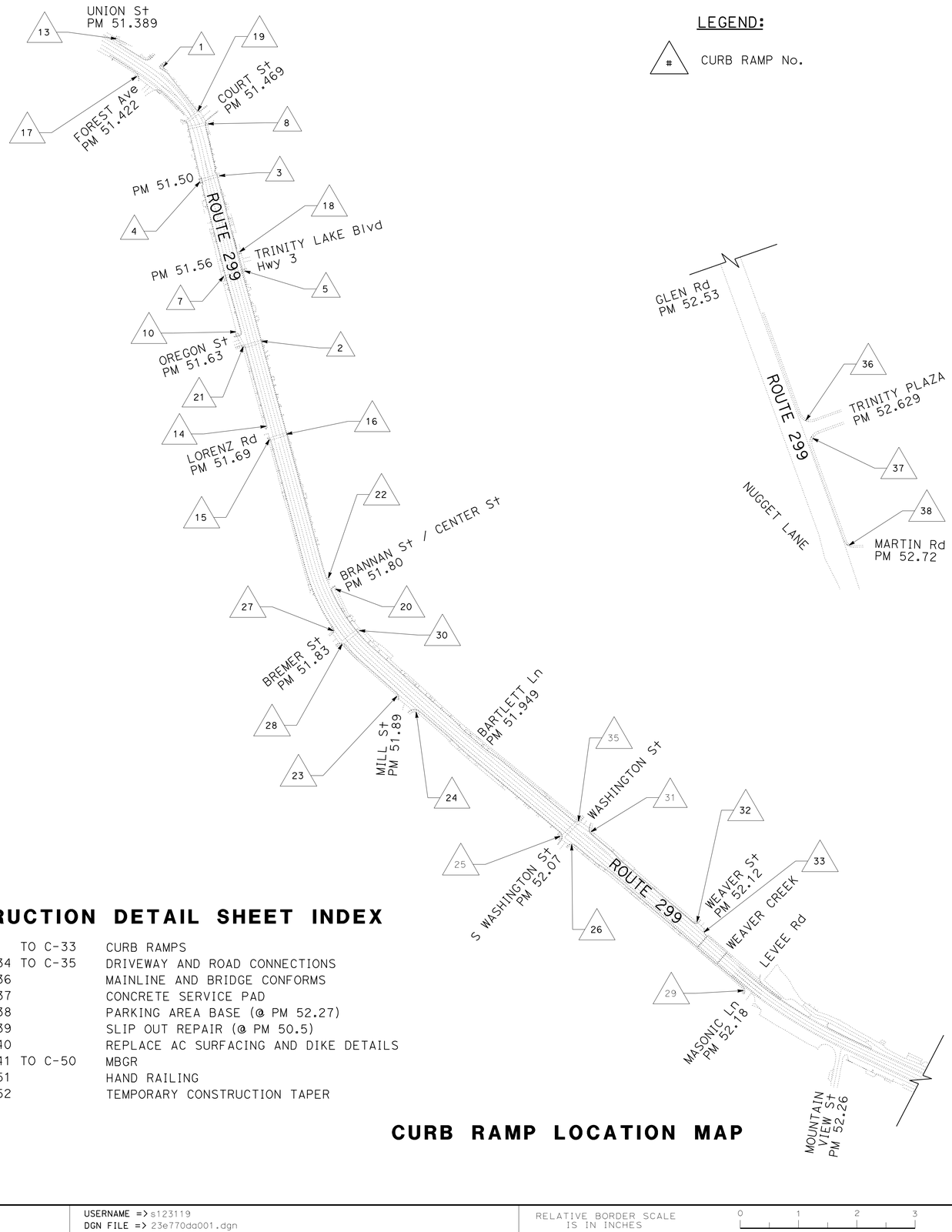

LEGEND:

CURB RAMP No.

CURB RAMP No.	SHEET No.	CURVE RAMP No.	SHEET No.
1	C-1	20	C-16
2	C-2	21	C-17
3	C-3	22	C-18
4	C-4	23	C-19
5	C-5	24	C-20
6	NO WORK	25	C-21
7	C-6	26	C-22
8	C-7	27	C-23
9	NO WORK	28	C-24
10	C-8	29	C-25
11	NO WORK	30	C-26
12	NO WORK	31	C-27
13	C-9	32	C-28
14	C-10	33	C-29
15	C-11	34	NO WORK
16	C-12	35	C-30
17	C-13	36	C-31
18	C-14	37	C-32
19	C-15	38	C-33

CONSTRUCTION DETAIL SHEET INDEX

C-1 TO C-33	CURB RAMPS
C-34 TO C-35	DRIVEWAY AND ROAD CONNECTIONS
C-36	MAINLINE AND BRIDGE CONFORMS
C-37	CONCRETE SERVICE PAD
C-38	PARKING AREA BASE (@ PM 52.27)
C-39	SLIP OUT REPAIR (@ PM 50.5)
C-40	REPLACE AC SURFACING AND DIKE DETAILS
C-41 TO C-50	MBGR
C-51	HAND RAILING
C-52	TEMPORARY CONSTRUCTION TAPER

CURB RAMP LOCATION MAP

KEY MAP
NO SCALE

DA-1

REVISED BY | DATE REVISED
JEANNIE STEFFAN | HEIDI BORDERS
CALCULATED-DESIGNED BY | CHECKED BY
FUNCTIONAL SUPERVISOR: JULIE CASEY

STATE OF CALIFORNIA - DEPARTMENT OF TRANSPORTATION
Caltrans® DESIGN

P:\proj1\02\3E770_plans\pse\23e770da001.dgn

LAST REVISION 11-25-14 | DATE PLOTTED => 15-JAN-2015 | TIME PLOTTED => 16:07

Dist	COUNTY	ROUTE	POST MILES TOTAL PROJECT	SHEET No.	TOTAL SHEETS
02	Tri	299	36.9/53.5	5	165

Heidi Borders 11-25-14
REGISTERED CIVIL ENGINEER DATE

11-26-14
PLANS APPROVAL DATE

REGISTERED PROFESSIONAL ENGINEER HEIDI E. BORDERS No. C64194 Exp. 6-30-15 CIVIL STATE OF CALIFORNIA

THE STATE OF CALIFORNIA OR ITS OFFICERS OR AGENTS SHALL NOT BE RESPONSIBLE FOR THE ACCURACY OR COMPLETENESS OF SCANNED COPIES OF THIS PLAN SHEET.

NOTE:

1. FOR ACCURATE RIGHT OF WAY DATA, CONTACT RIGHT OF WAY ENGINEERING AT THE DISTRICT OFFICE.

LEGEND:

- CURB RAMP GROOVING
- DETECTABLE WARNING SURFACE
- COLD PLANE AC PAVEMENT
- TRIM LINE
- # CURB RAMP NUMBER

ABBREVIATIONS:

TBC	TOP BACK OF CURB
TRC	TOP OF RETAINING CURB
CPACP	COLD PLANE ASPHALT CONCRETE PAVEMENT
(E)	EXISTING

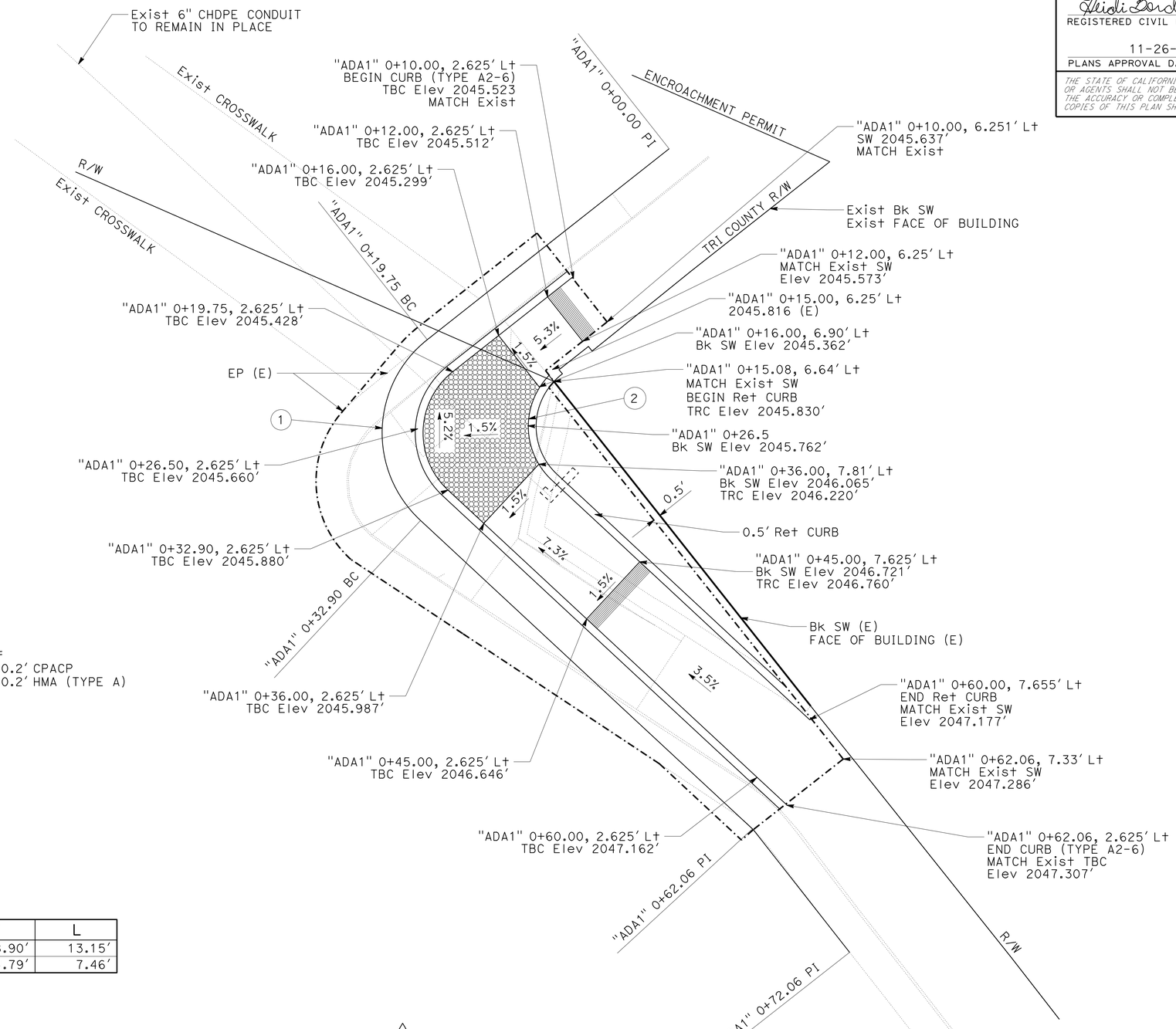

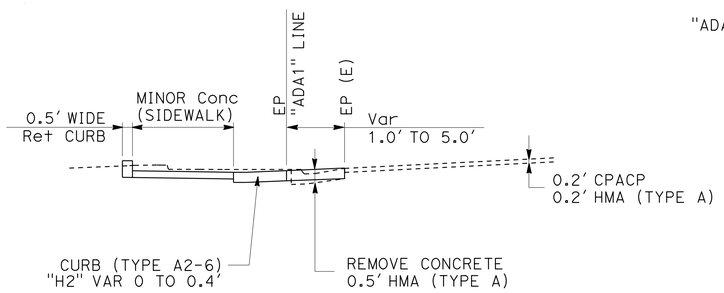

TYPICAL SECTION

FOR DETAILS NOT SHOWN SEE STD PLANS

CURVE DATA

No. ⊕	R	Δ	T	L
1	7.6'	98°48'17"	8.90'	13.15'
2	4.7'	91°16'14"	4.79'	7.46'

CURB RAMP 1

PM 51.422
ROUTE 299 & GARDEN GULCH

NOTE: TRIMLINE SHALL MAINTAIN A MINIMUM DISTANCE OF 6" FROM EXISTING FACE OF BUILDING

CONSTRUCTION DETAILS

NO SCALE

C-1

STATE OF CALIFORNIA - DEPARTMENT OF TRANSPORTATION
Caltrans® DESIGN

FUNCTIONAL SUPERVISOR: JULIE CASEY
CALCULATED-DESIGNED BY: JEANNIE STEFFAN
CHECKED BY: HEIDI BORDERS
REVISED BY / DATE REVISED

P:\proj\02\3E770_plans\pse\23e770ga001.dgn

LAST REVISION 11-25-14 | DATE PLOTTED => 15-JAN-2015 | TIME PLOTTED => 16:07

Dist	COUNTY	ROUTE	POST MILES TOTAL PROJECT	SHEET No.	TOTAL SHEETS
02	Tri	299	36.9/53.5	6	165

Heidi Borders 11-25-14
REGISTERED CIVIL ENGINEER DATE

11-26-14
PLANS APPROVAL DATE

REGISTERED PROFESSIONAL ENGINEER HEIDI E. BORDERS No. C64194 Exp. 6-30-15 CIVIL STATE OF CALIFORNIA

THE STATE OF CALIFORNIA OR ITS OFFICERS OR AGENTS SHALL NOT BE RESPONSIBLE FOR THE ACCURACY OR COMPLETENESS OF SCANNED COPIES OF THIS PLAN SHEET.

NOTE:

1. FOR ACCURATE RIGHT OF WAY DATA, CONTACT RIGHT OF WAY ENGINEERING AT THE DISTRICT OFFICE.

ABBREVIATIONS:

TBC	TOP BACK OF CURB
TRC	TOP OF RETAINING CURB
CPACP	COLD PLANE ASPHALT CONCRETE PAVEMENT
(E)	EXISTING

LEGEND:

- CURB RAMP GROOVING
- DETECTABLE WARNING SURFACE
- COLD PLANE AC PAVEMENT
- TRIM LINE
- # CURB RAMP NUMBER

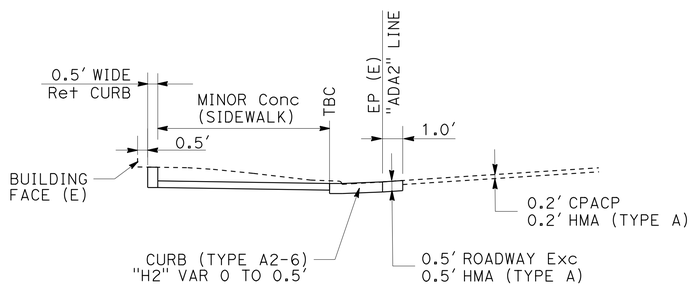

TYPICAL SECTION

NOTE: THERE IS A 5.0' TRANSITION FROM MATCH EXIST CURB TO CURB (TYPE A2-6).

FOR DETAILS NOT SHOWN SEE STD PLANS

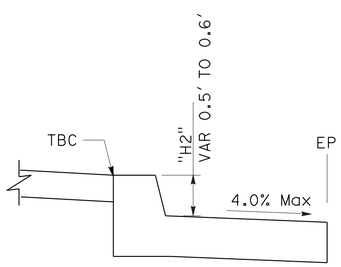

INVERTED
CURB (TYPE A2-6)

"ADA2" 0+00 TO 0+05
"ADA2" 0+27 TO 0+32

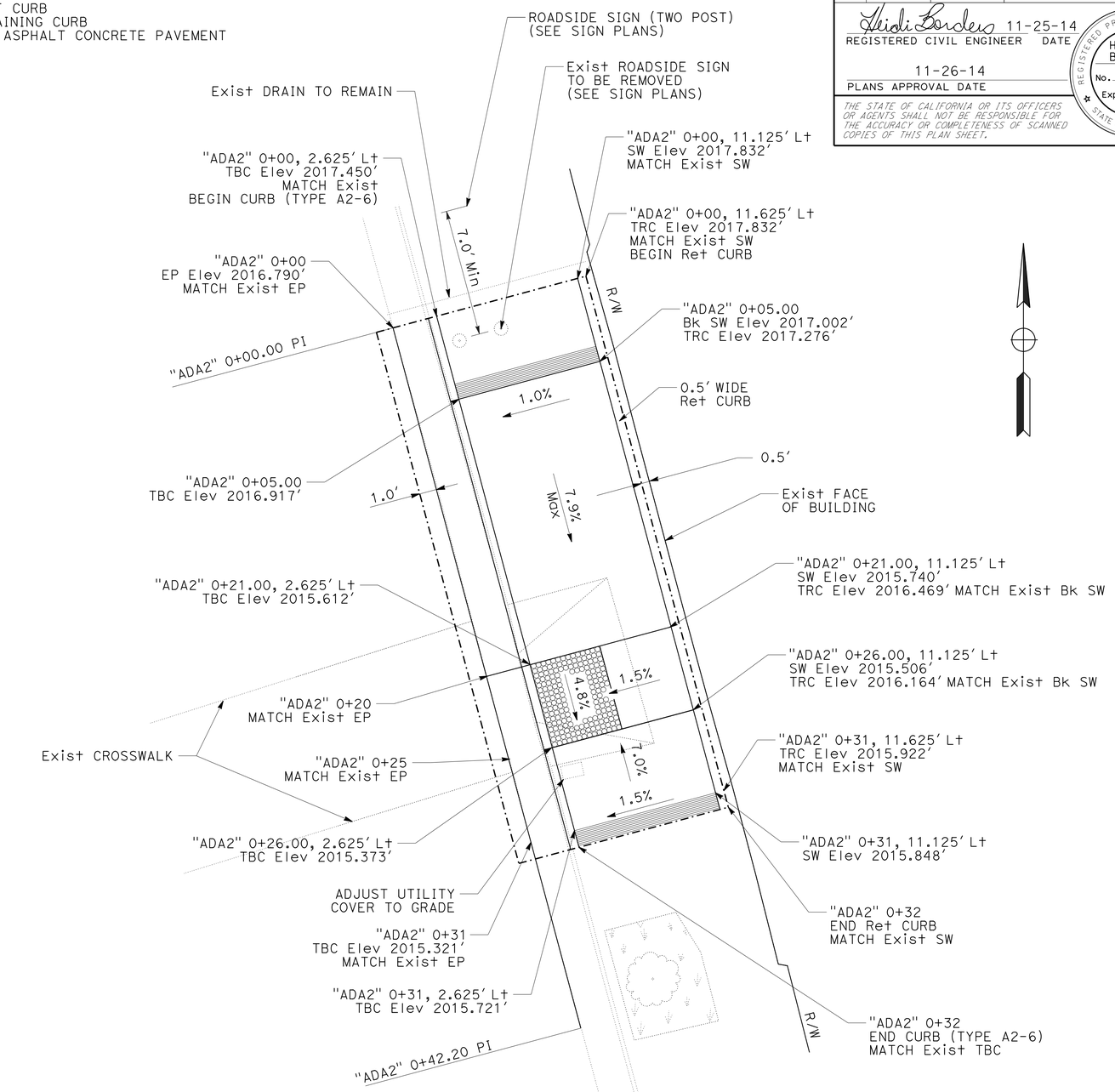

CURB RAMP 2

PM 51.63
ROUTE 299 & OREGON St

NOTE: TRIMLINE SHALL MAINTAIN A MINIMUM DISTANCE OF 6" FROM EXISTING FACE OF BUILDING

CONSTRUCTION DETAILS

NO SCALE

C-2

REVISED BY	DATE REVISED

CALCULATED-DESIGNED BY: JEANNIE STEFFAN
CHECKED BY: HEIDI BORDERS
FUNCTIONAL SUPERVISOR: JULIE CASEY

STATE OF CALIFORNIA - DEPARTMENT OF TRANSPORTATION
Caltrans DESIGN

P:\proj\02\3E770_plans\pse\23e770ga002.dgn

LAST REVISION 11-25-14 | DATE PLOTTED => 15-JAN-2015 | TIME PLOTTED => 16:07

Dist	COUNTY	ROUTE	POST MILES TOTAL PROJECT	SHEET No.	TOTAL SHEETS
02	Tri	299	36.9/53.5	7	165

Heidi Borders 11-25-14
REGISTERED CIVIL ENGINEER DATE

11-26-14
PLANS APPROVAL DATE

REGISTERED PROFESSIONAL ENGINEER HEIDI E. BORDERS No. C64194 Exp. 6-30-15 CIVIL STATE OF CALIFORNIA

THE STATE OF CALIFORNIA OR ITS OFFICERS OR AGENTS SHALL NOT BE RESPONSIBLE FOR THE ACCURACY OR COMPLETENESS OF SCANNED COPIES OF THIS PLAN SHEET.

NOTE:

1. FOR ACCURATE RIGHT OF WAY DATA, CONTACT RIGHT OF WAY ENGINEERING AT THE DISTRICT OFFICE.

LEGEND:

- CURB RAMP GROOVING
- DETECTABLE WARNING SURFACE
- COLD PLANE AC PAVEMENT
- TRIM LINE
- # CURB RAMP NUMBER

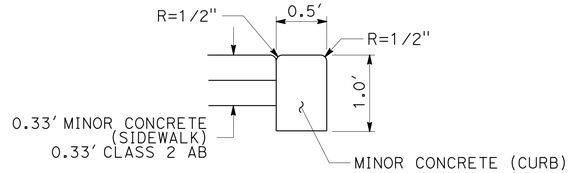

MODIFIED CURB (TYPE A1)
FOR ADDITIONAL DETAILS SEE Std PLANS

ABBREVIATIONS:

TBC	TOP BACK OF CURB
TRC	TOP OF RETAINING CURB
CPACP	COLD PLANE ASPHALT CONCRETE PAVEMENT
(E)	EXISTING

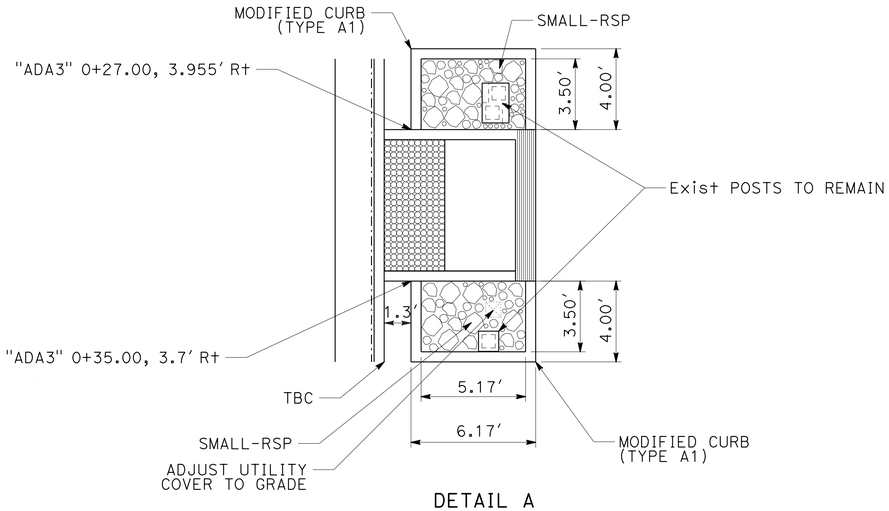

DETAIL A

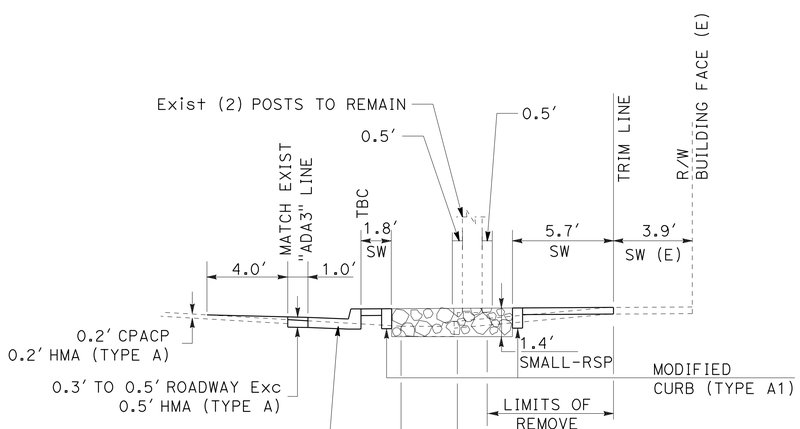

SECTION A-A

NOTE: CONCRETE TO REMAIN IN PLACE WITHIN 6" OF Exist POSTS

FOR DETAILS NOT SHOWN SEE STD PLANS

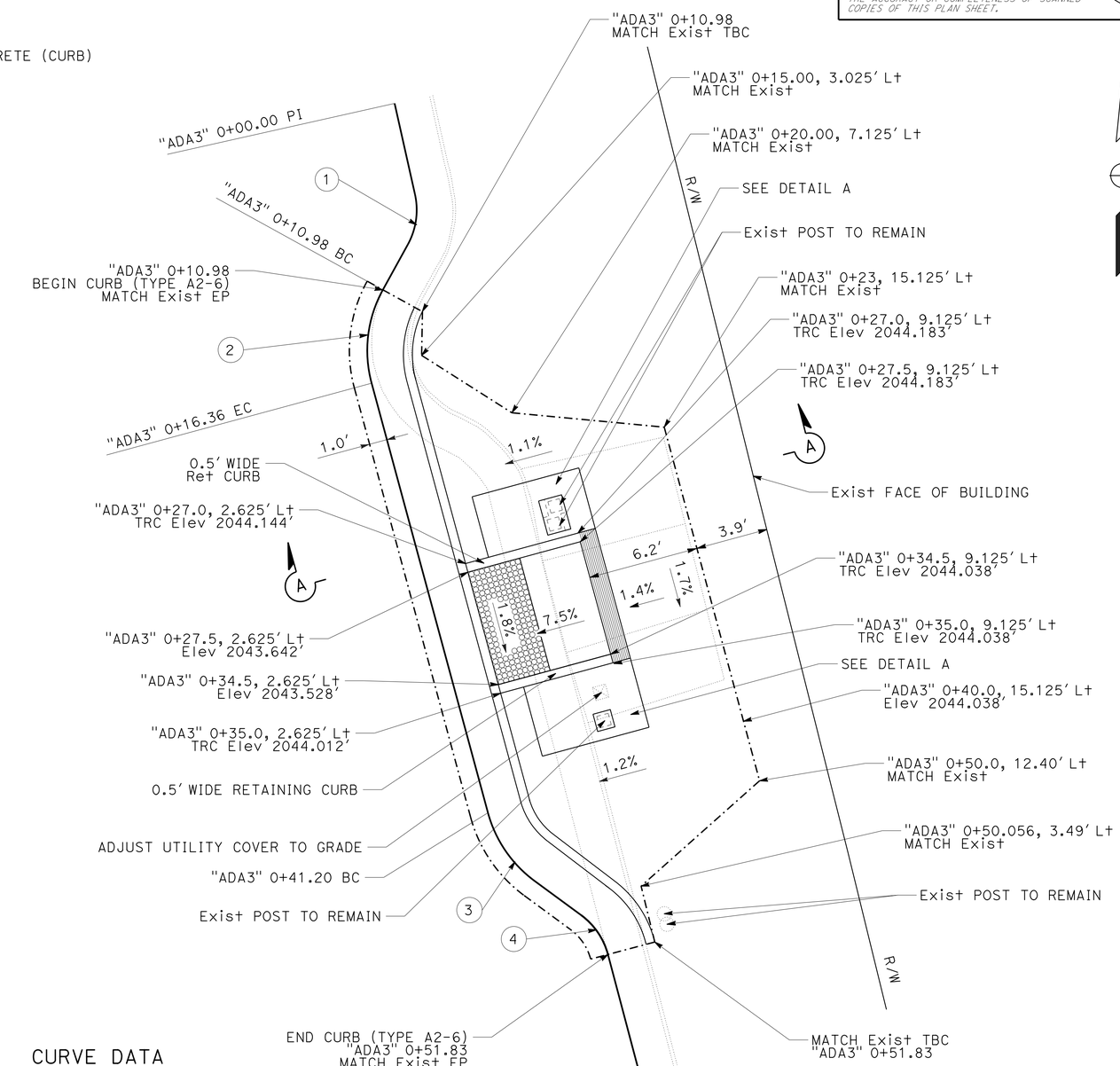

CURVE DATA

No. ⊕	R	Δ	T	L
1	4.0'	41°29'51"	1.52'	2.90'
2	7.0'	44°01'10"	2.83'	5.38'
3	7.0'	38°32'53"	2.45'	4.71'
4	4.0'	38°52'02"	1.41'	2.71'

CURB RAMP 3

MID-BLOCK PM 51.50

CONSTRUCTION DETAILS

NO SCALE

C-3

STATE OF CALIFORNIA - DEPARTMENT OF TRANSPORTATION
Caltrans DESIGN
FUNCTIONAL SUPERVISOR: JULIE CASEY
CALCULATED-DESIGNED BY: JEANNIE STEFFAN
CHECKED BY: HEIDI BORDERS
REVISED BY / DATE REVISED
P:\proj\02\3E770_plans\pse\23e770ga003.dgn

LAST REVISION 11-25-14 | DATE PLOTTED => 15-JAN-2015 | TIME PLOTTED => 16:07

Dist	COUNTY	ROUTE	POST MILES TOTAL PROJECT	SHEET No.	TOTAL SHEETS
02	Tri	299	36.9/53.5	8	165

Heidi Borders 11-25-14
REGISTERED CIVIL ENGINEER DATE

11-26-14
PLANS APPROVAL DATE

REGISTERED PROFESSIONAL ENGINEER HEIDI E. BORDERS No. C64194 Exp. 6-30-15 CIVIL STATE OF CALIFORNIA

THE STATE OF CALIFORNIA OR ITS OFFICERS OR AGENTS SHALL NOT BE RESPONSIBLE FOR THE ACCURACY OR COMPLETENESS OF SCANNED COPIES OF THIS PLAN SHEET.

NOTE:

1. FOR ACCURATE RIGHT OF WAY DATA, CONTACT RIGHT OF WAY ENGINEERING AT THE DISTRICT OFFICE.

LEGEND:

- CURB RAMP GROOVING
- DETECTABLE WARNING SURFACE
- COLD PLANE AC PAVEMENT
- TRIM LINE
- # CURB RAMP NUMBER

ABBREVIATIONS:

TBC	TOP BACK OF CURB
TRC	TOP OF RETAINING CURB
CPACP	COLD PLANE ASPHALT CONCRETE PAVEMENT
(E)	EXISTING

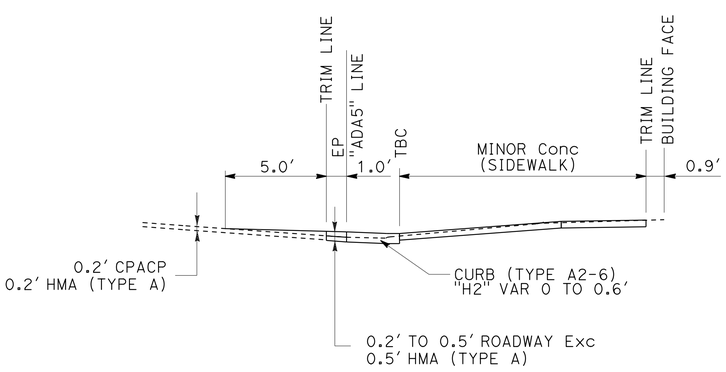

TYPICAL SECTION

FOR DETAILS NOT SHOWN
SEE STD PLANS

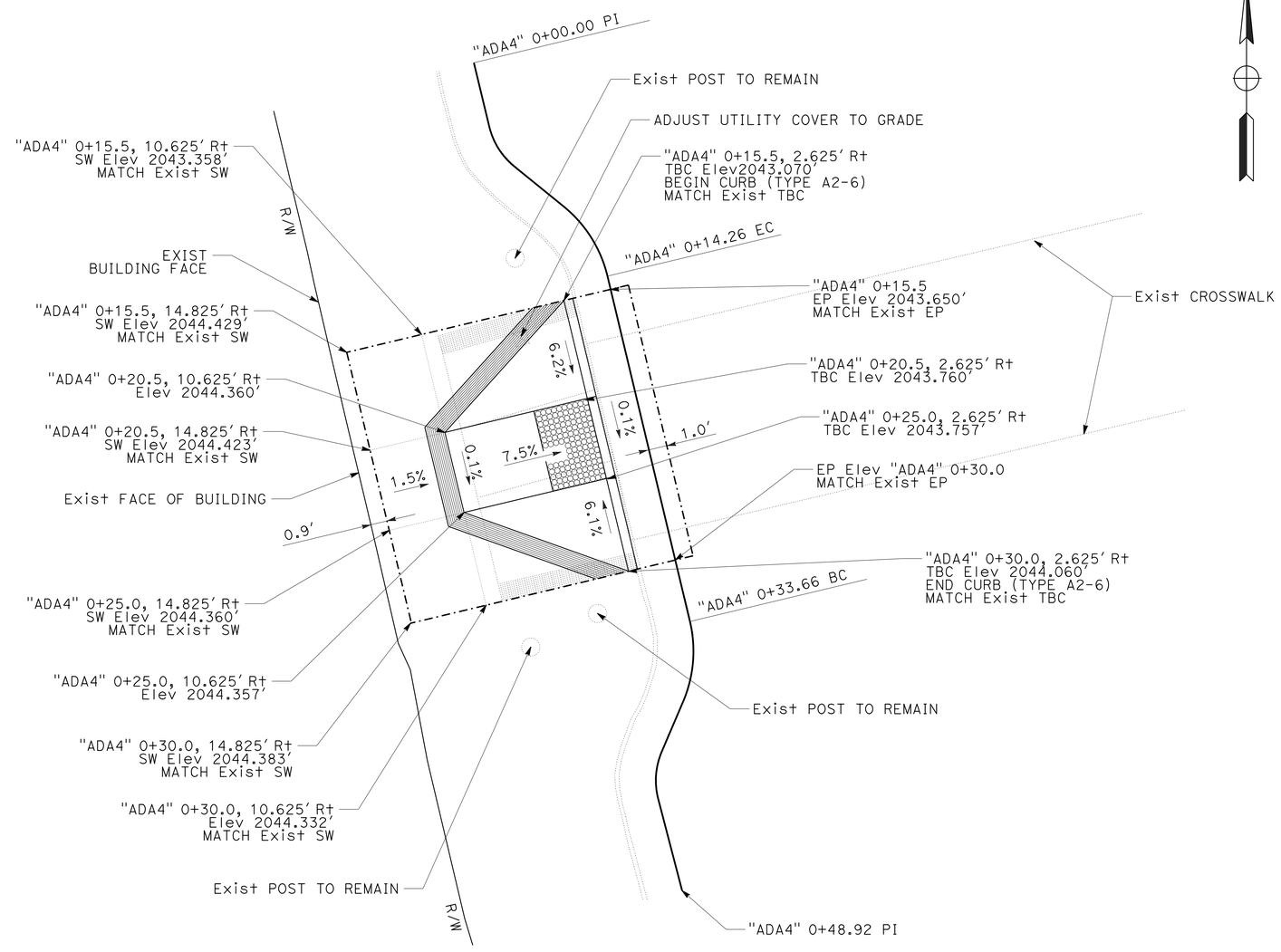

CURB RAMP 4

MID-BLOCK PM 51.50

NOTE: TRIMLINE SHALL MAINTAIN A MINIMUM DISTANCE OF 6" FROM EXIST FACE OF BUILDING

CONSTRUCTION DETAILS

NO SCALE

C-4

STATE OF CALIFORNIA - DEPARTMENT OF TRANSPORTATION
Caltrans® DESIGN

FUNCTIONAL SUPERVISOR: JULIE CASEY
CALCULATED-DESIGNED BY: JEANNIE STEFFAN
CHECKED BY: HEIDI BORDERS
REVISED BY
DATE REVISED

P:\proj1\02\3E770_plans\pse\23e770ga004.dgn

LAST REVISION 11-25-14
DATE PLOTTED => 15-JAN-2015
TIME PLOTTED => 16:07

Dist	COUNTY	ROUTE	POST MILES TOTAL PROJECT	SHEET No.	TOTAL SHEETS
02	Tri	299	36.9/53.5	9	165

Heidi Borders 11-25-14
REGISTERED CIVIL ENGINEER DATE

11-26-14
PLANS APPROVAL DATE

REGISTERED PROFESSIONAL ENGINEER HEIDI E. BORDERS No. C64194 Exp. 6-30-15 CIVIL STATE OF CALIFORNIA

THE STATE OF CALIFORNIA OR ITS OFFICERS OR AGENTS SHALL NOT BE RESPONSIBLE FOR THE ACCURACY OR COMPLETENESS OF SCANNED COPIES OF THIS PLAN SHEET.

NOTE:

1. FOR ACCURATE RIGHT OF WAY DATA, CONTACT RIGHT OF WAY ENGINEERING AT THE DISTRICT OFFICE.

CURVE DATA

No. ⊕	R	Δ	T	L
1	12.0′	89°53′51″	11.98′	18.83′

LEGEND:

- CURB RAMP GROOVING
- DETECTABLE WARNING SURFACE
- COLD PLANE AC PAVEMENT
- TRIM LINE
- # CURB RAMP NUMBER

ABBREVIATIONS:

TBC	TOP BACK OF CURB
TRC	TOP OF RETAINING CURB
CPACP	COLD PLANE ASPHALT CONCRETE PAVEMENT
(E)	EXISTING

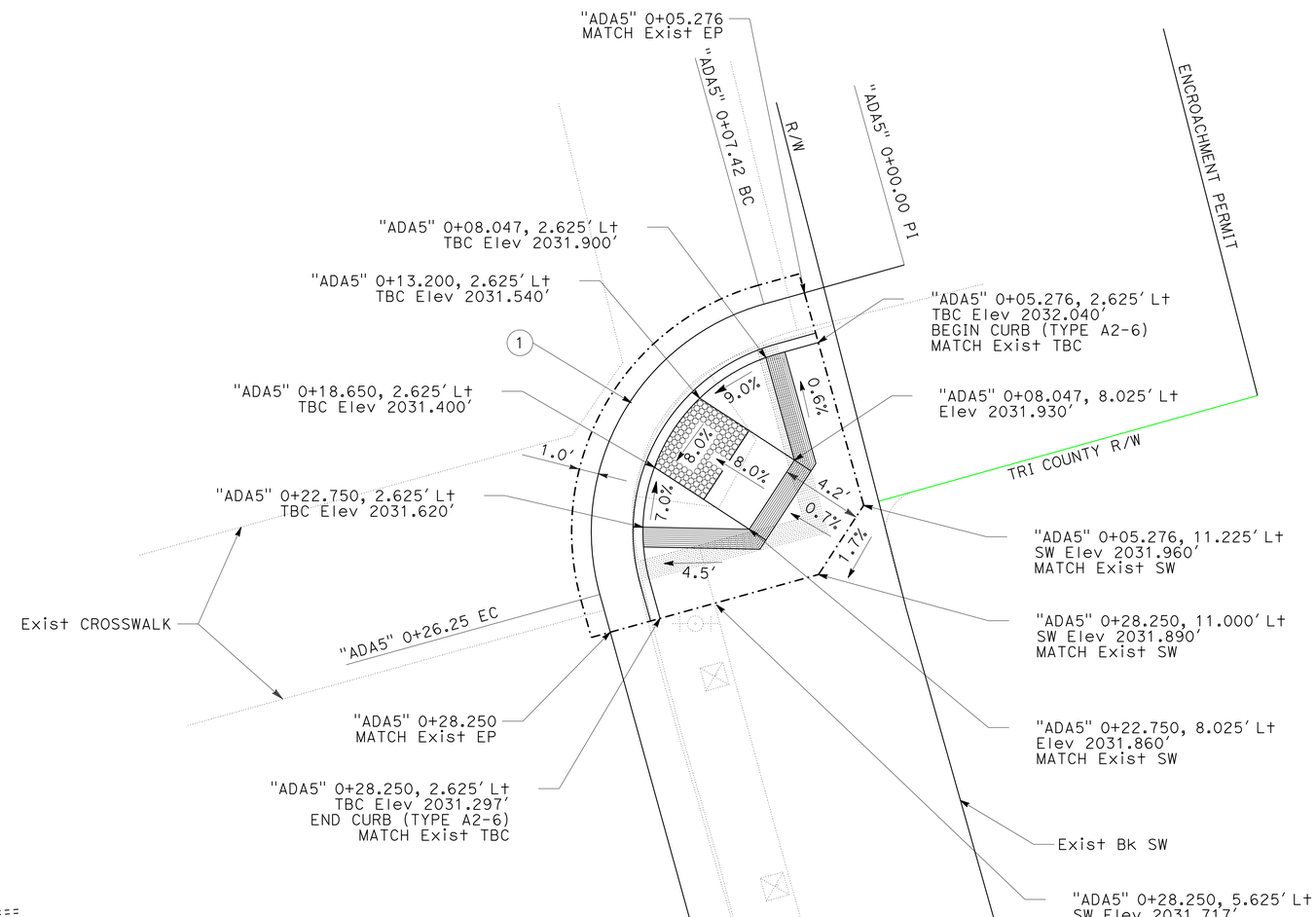

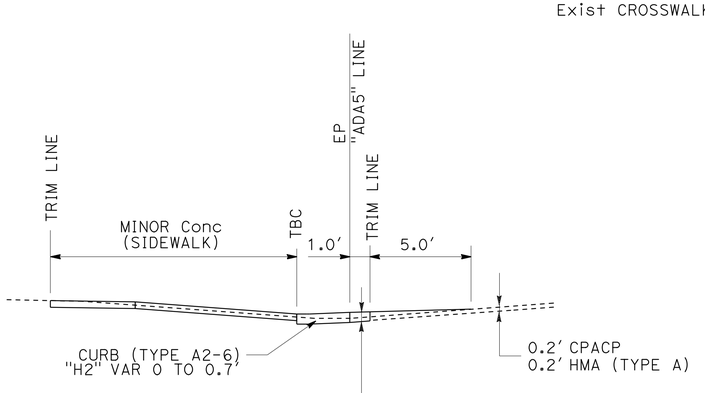

TYPICAL SECTION

FOR DETAILS NOT SHOWN
SEE STD PLANS

CURB RAMP 5

PM 51.56
ROUTE 299 & Hwy 3

NOTE: TRIMLINE SHALL MAINTAIN A MINIMUM DISTANCE OF 6" FROM BUILDING FACE

CONSTRUCTION DETAILS

NO SCALE

C-5

STATE OF CALIFORNIA - DEPARTMENT OF TRANSPORTATION
Caltrans DESIGN

FUNCTIONAL SUPERVISOR: JULIE CASEY
CALCULATED-DESIGNED BY: JEANNIE STEFFAN
CHECKED BY: HEIDI BORDERS
REVISED BY / DATE REVISED

P:\proj1\02\3E770_plans\pse\23e770ga005.dgn

LAST REVISION 11-25-14
DATE PLOTTED => 15-JAN-2015
TIME PLOTTED => 16:07

Dist	COUNTY	ROUTE	POST MILES TOTAL PROJECT	SHEET No.	TOTAL SHEETS
02	Tri	299	36.9/53.5	10	165

Heidi Borders 11-25-14
REGISTERED CIVIL ENGINEER DATE

11-26-14
PLANS APPROVAL DATE

REGISTERED PROFESSIONAL ENGINEER HEIDI E. BORDERS No. C64194 Exp. 6-30-15 CIVIL STATE OF CALIFORNIA

THE STATE OF CALIFORNIA OR ITS OFFICERS OR AGENTS SHALL NOT BE RESPONSIBLE FOR THE ACCURACY OR COMPLETENESS OF SCANNED COPIES OF THIS PLAN SHEET.

NOTE:

1. FOR ACCURATE RIGHT OF WAY DATA, CONTACT RIGHT OF WAY ENGINEERING AT THE DISTRICT OFFICE.

ABBREVIATIONS:

TBC	TOP BACK OF CURB
TRC	TOP OF RETAINING CURB
CPACP	COLD PLANE ASPHALT CONCRETE PAVEMENT
(E)	EXISTING

LEGEND:

- CURB RAMP GROOVING
- DETECTABLE WARNING SURFACE
- COLD PLANE AC PAVEMENT
- TRIM LINE
- # CURB RAMP NUMBER

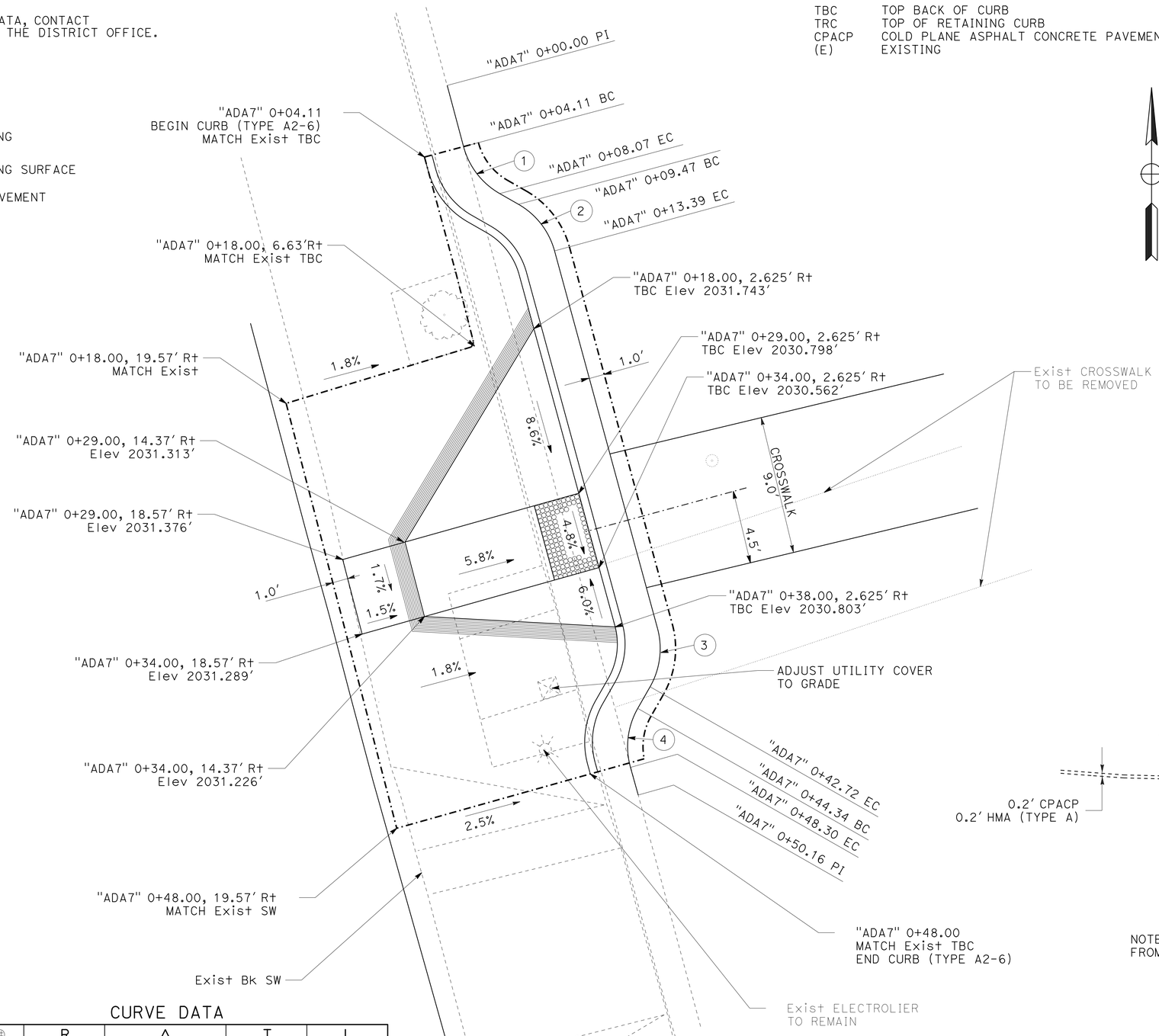

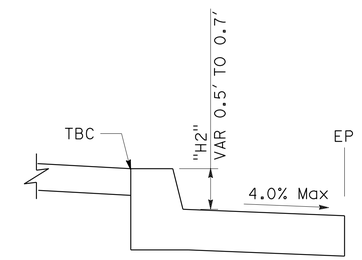

INVERTED
CURB (TYPE A2-6)

"ADA7" 0+04.11 TO 0+09.11
"ADA7" 0+43.00 TO 0+48.00

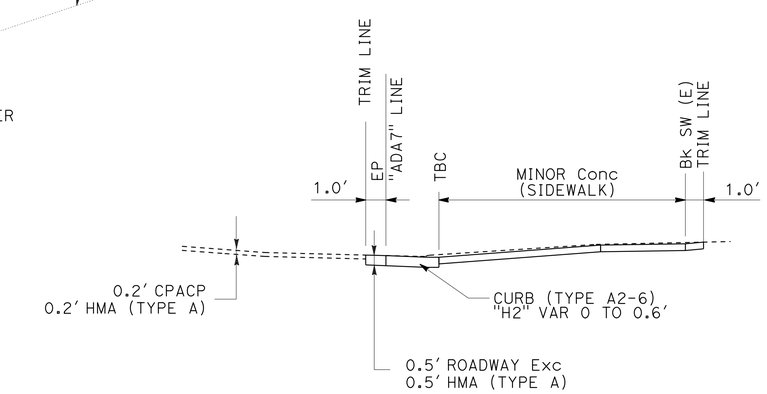

TYPICAL SECTION

NOTE: THERE IS A 5.0' TRANSITION FROM MATCH EXIST CURB TO CURB (TYPE A2-6)

FOR DETAILS NOT SHOWN SEE STD PLANS

CURVE DATA

No. ⊕	R	Δ	T	L
1	5.0'	45°17'26"	2.09'	3.95'
2	5.0'	44°59'40"	2.07'	3.93'
3	5.0'	44°58'06"	2.07'	3.92'
4	5.0'	45°23'50"	2.09'	3.96'

CURB RAMP 7

PM 51.56
ROUTE 299 & Hwy 3

CONSTRUCTION DETAILS

NO SCALE

C-6

REVISED BY	DATE REVISED

JEANNIE STEFFAN — HEIDI BORDERS — CALCULATED-DESIGNED BY — CHECKED BY

FUNCTIONAL SUPERVISOR: JULIE CASEY

STATE OF CALIFORNIA - DEPARTMENT OF TRANSPORTATION — DESIGN

P:\proj\02\3E770_plans\pse\23e770ga006.dgn

LAST REVISION 11-25-14 — DATE PLOTTED => 15-JAN-2015 — TIME PLOTTED => 16:07

Dist	COUNTY	ROUTE	POST MILES TOTAL PROJECT	SHEET No.	TOTAL SHEETS
02	Tri	299	36.9/53.5	11	165

Heidi Borders 11-25-14
REGISTERED CIVIL ENGINEER DATE

11-26-14
PLANS APPROVAL DATE

REGISTERED PROFESSIONAL ENGINEER HEIDI E. BORDERS No. C64194 Exp. 6-30-15 CIVIL STATE OF CALIFORNIA

THE STATE OF CALIFORNIA OR ITS OFFICERS OR AGENTS SHALL NOT BE RESPONSIBLE FOR THE ACCURACY OR COMPLETENESS OF SCANNED COPIES OF THIS PLAN SHEET.

NOTE:

1. FOR ACCURATE RIGHT OF WAY DATA, CONTACT RIGHT OF WAY ENGINEERING AT THE DISTRICT OFFICE.

LEGEND:

- CURB RAMP GROOVING
- DETECTABLE WARNING SURFACE
- COLD PLANE AC PAVEMENT
- TRIM LINE
- # CURB RAMP NUMBER
- AREA TO REMAIN UNPAVED

ABBREVIATIONS:

TBC	TOP BACK OF CURB
TRC	TOP OF RETAINING CURB
CPACP	COLD PLANE ASPHALT CONCRETE PAVEMENT
(E)	EXISTING

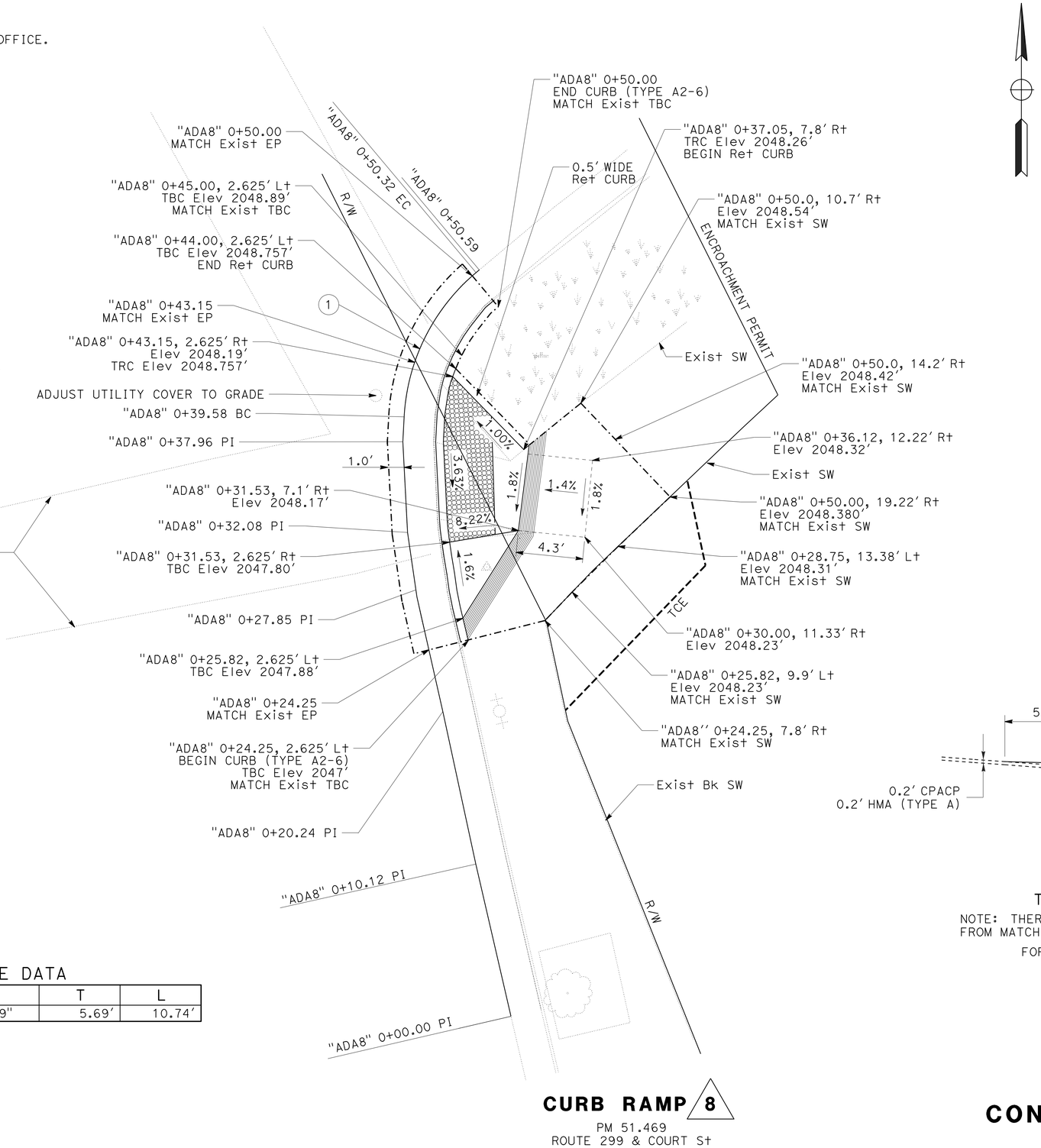

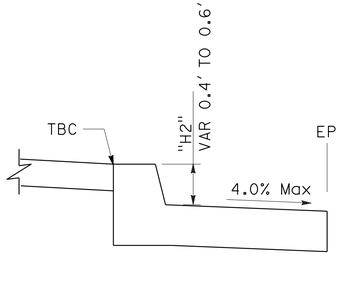

INVERTED
CURB (TYPE A2-6)

"ADA8" 0+19.25 TO 0+24.25
"ADA8" 0+45.32 TO 0+50.32

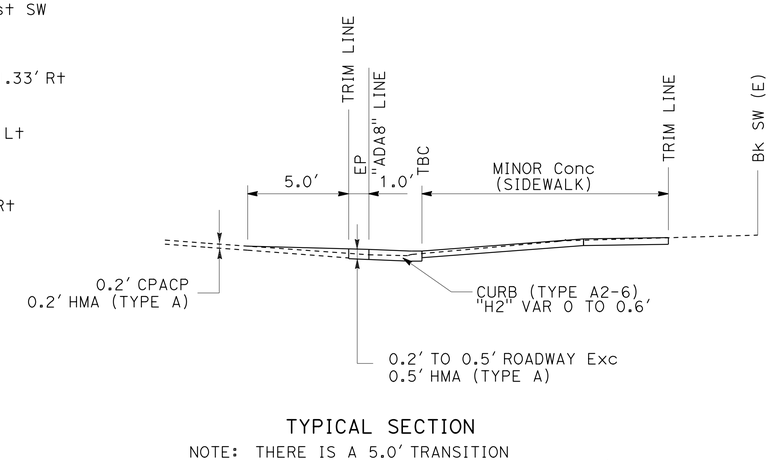

TYPICAL SECTION

NOTE: THERE IS A 5.0' TRANSITION FROM MATCH EXIST CURB TO CURB (TYPE A2-6).

FOR DETAILS NOT SHOWN
SEE STD PLANS

CURVE DATA

No. ⊕	R	Δ	T	L
1	13.1'	46°58'49"	5.69'	10.74'

CURB RAMP 8

PM 51.469
ROUTE 299 & COURT St

CONSTRUCTION DETAILS

NO SCALE

C-7

REVISED BY	DATE REVISED

JEANNIE STEFFAN — HEIDI BORDERS — CALCULATED-DESIGNED BY — CHECKED BY — FUNCTIONAL SUPERVISOR: JULIE CASEY

STATE OF CALIFORNIA - DEPARTMENT OF TRANSPORTATION
Caltrans
DESIGN

P:\proj1\02\3E770_plans\pse\23e770ga007.dgn

LAST REVISION 11-25-14 | DATE PLOTTED => 15-JAN-2015 | TIME PLOTTED => 16:07

Dist	COUNTY	ROUTE	POST MILES TOTAL PROJECT	SHEET No.	TOTAL SHEETS
02	Tri	299	36.9/53.5	12	165

Heidi Borders 11-25-14
REGISTERED CIVIL ENGINEER DATE

11-26-14
PLANS APPROVAL DATE

REGISTERED PROFESSIONAL ENGINEER HEIDI E. BORDERS No. C64194 Exp. 6-30-15 CIVIL STATE OF CALIFORNIA

THE STATE OF CALIFORNIA OR ITS OFFICERS OR AGENTS SHALL NOT BE RESPONSIBLE FOR THE ACCURACY OR COMPLETENESS OF SCANNED COPIES OF THIS PLAN SHEET.

LEGEND:

- CURB RAMP GROOVING
- DETECTABLE WARNING SURFACE
- COLD PLANE AC PAVEMENT
- TRIM LINE
- # CURB RAMP NUMBER

NOTE:

1. FOR ACCURATE RIGHT OF WAY DATA, CONTACT RIGHT OF WAY ENGINEERING AT THE DISTRICT OFFICE.

ABBREVIATIONS:

TBC	TOP BACK OF CURB
TRC	TOP OF RETAINING CURB
CPACP	COLD PLANE ASPHALT CONCRETE PAVEMENT
(E)	EXISTING

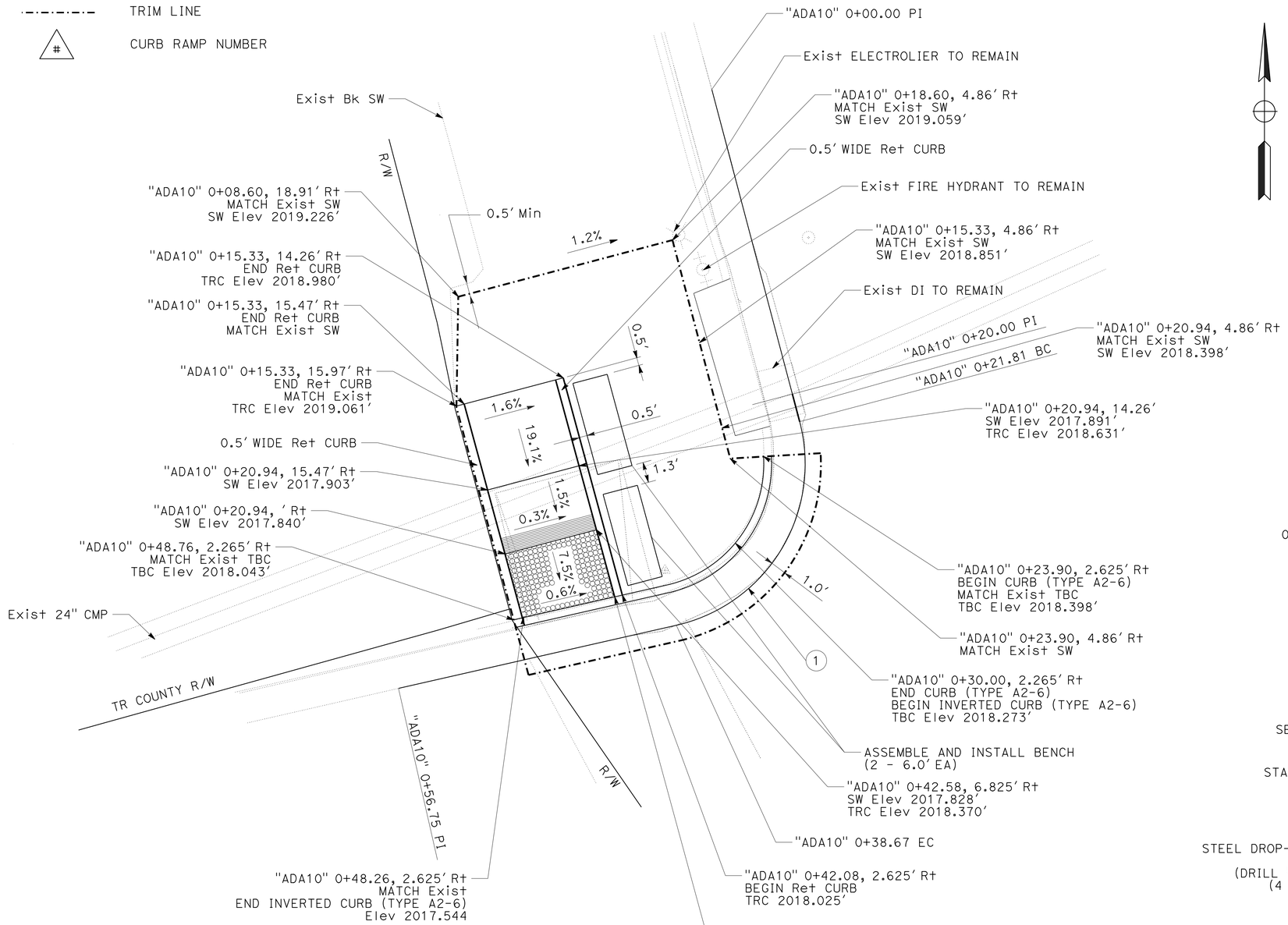

CURB RAMP 10

PM 51.63
ROUTE 299 & OREGON St

CURVE DATA

No. ⊕	R	Δ	T	L
1	10.5'	80°36'24"	8.91'	14.77'

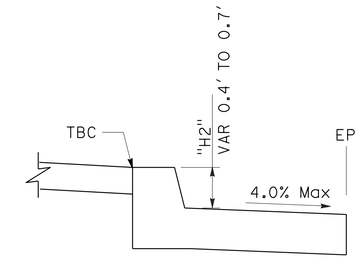

INVERTED CURB (TYPE A2-6)

"ADA8" 0+19.25 TO 0+24.25
"ADA8" 0+45.32 TO 0+50.32

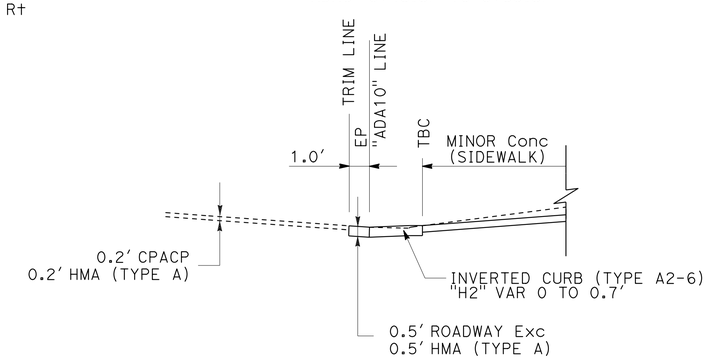

TYPICAL SECTION

FOR DETAILS NOT SHOWN
SEE STD PLANS

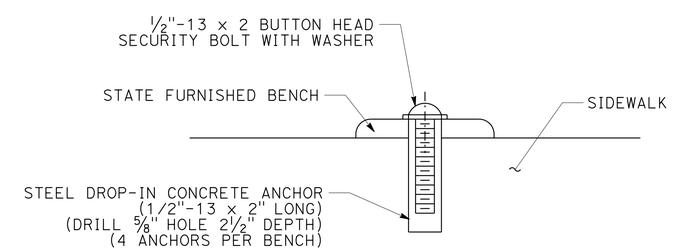

BENCH TO SIDEWALK CONNECTION

CONSTRUCTION DETAILS

NO SCALE

C-8

REVISED BY | DATE REVISED
JEANNIE STEFFAN | HEIDI BORDERS
CALCULATED-DESIGNED BY | CHECKED BY
FUNCTIONAL SUPERVISOR | JULIE CASEY

STATE OF CALIFORNIA - DEPARTMENT OF TRANSPORTATION
Caltrans
DESIGN

P:\proj1\02\3E770_plans\pse\23e770ga008.dgn

LAST REVISION 11-25-14 | DATE PLOTTED => 15-JAN-2015 | TIME PLOTTED => 16:07

Dist	COUNTY	ROUTE	POST MILES TOTAL PROJECT	SHEET No.	TOTAL SHEETS
02	Tri	299	36.9/53.5	13	165

Heidi Borders 11-25-14
REGISTERED CIVIL ENGINEER DATE

11-26-14
PLANS APPROVAL DATE

REGISTERED PROFESSIONAL ENGINEER HEIDI E. BORDERS No. C64194 Exp. 6-30-15 CIVIL STATE OF CALIFORNIA

THE STATE OF CALIFORNIA OR ITS OFFICERS OR AGENTS SHALL NOT BE RESPONSIBLE FOR THE ACCURACY OR COMPLETENESS OF SCANNED COPIES OF THIS PLAN SHEET.

NOTE:

1. FOR ACCURATE RIGHT OF WAY DATA, CONTACT RIGHT OF WAY ENGINEERING AT THE DISTRICT OFFICE.

ABBREVIATIONS:

TBC	TOP BACK OF CURB
TRC	TOP OF RETAINING CURB
CPACP	COLD PLANE ASPHALT CONCRETE PAVEMENT
(E)	EXISTING

LEGEND:

- CURB RAMP GROOVING
- DETECTABLE WARNING SURFACE
- COLD PLANE AC PAVEMENT
- TRIM LINE
- # CURB RAMP NUMBER

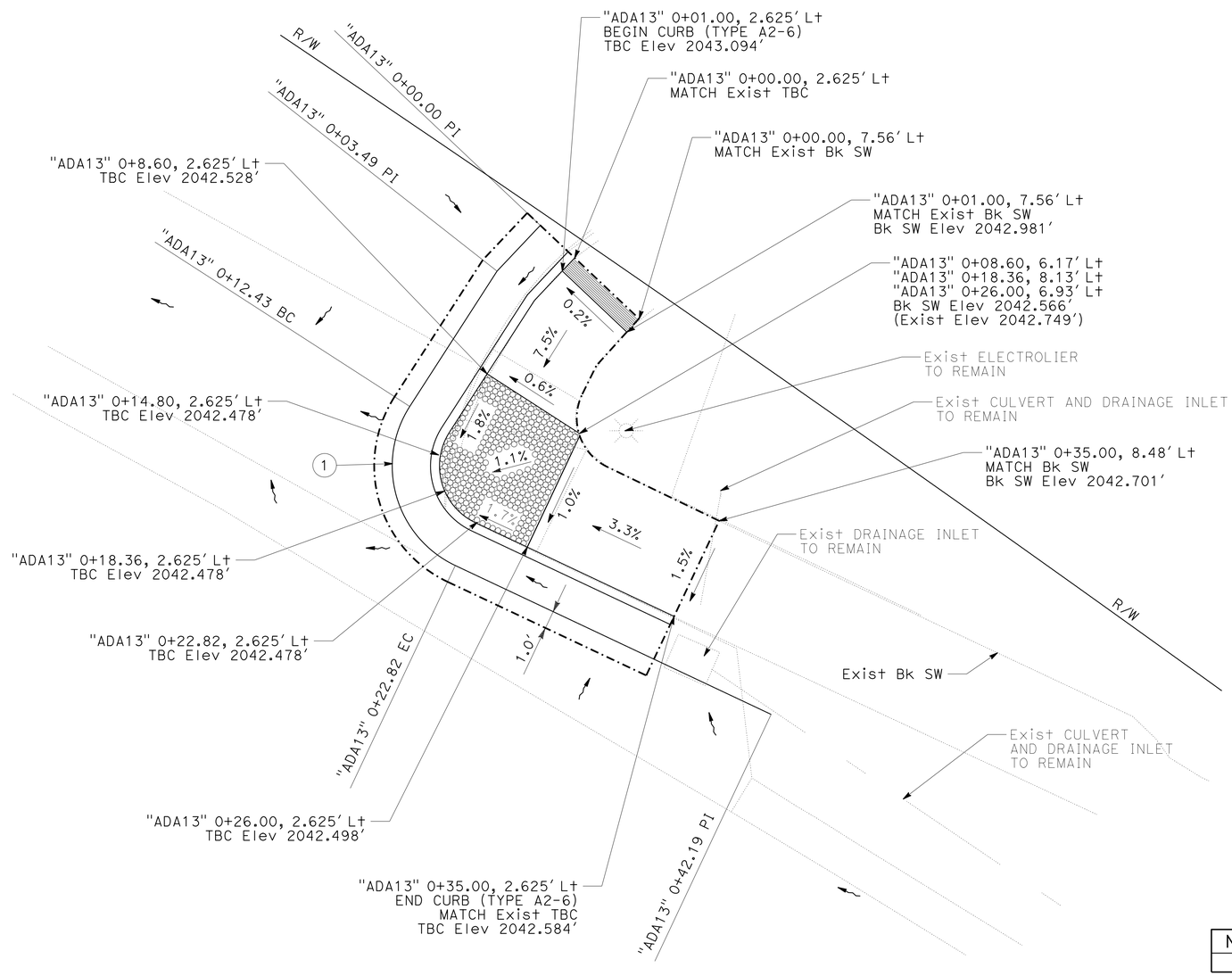

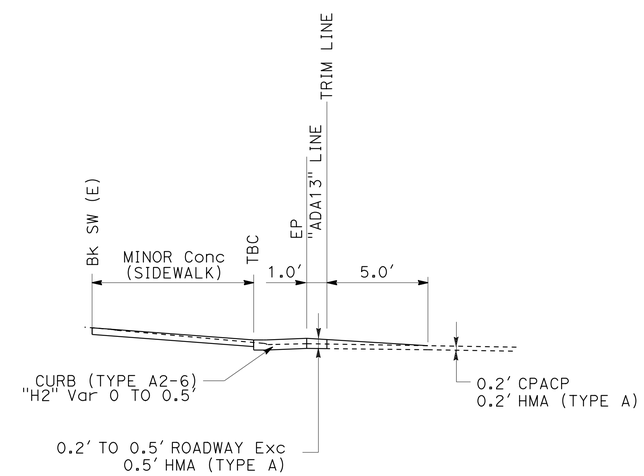

TYPICAL SECTION

FOR DETAILS NOT SHOWN
SEE Std PLANS

CURVE DATA

No. ⊕	R	Δ	T	L
1	6.1'	97°35'15"	6.97'	10.39'

CURB RAMP 13

PM 51.389
ROUTE 299 & UNION St

CONSTRUCTION DETAILS

NO SCALE

C-9

CALCULATED-DESIGNED BY	CHECKED BY	REVISED BY	DATE REVISED
JEANNIE STEFFAN	HEIDI BORDERS		

FUNCTIONAL SUPERVISOR: JULIE CASEY

STATE OF CALIFORNIA - DEPARTMENT OF TRANSPORTATION
Caltrans
DESIGN

P:\proj\02\3E770_plans\pse\23e770ga009.dgn

LAST REVISION 11-25-14 | DATE PLOTTED => 15-JAN-2015 | TIME PLOTTED => 16:07

Dist	COUNTY	ROUTE	POST MILES TOTAL PROJECT	SHEET No.	TOTAL SHEETS
02	Tri	299	36.9/53.5	14	165

Heidi Borders 11-25-14
REGISTERED CIVIL ENGINEER DATE

11-26-14
PLANS APPROVAL DATE

REGISTERED PROFESSIONAL ENGINEER HEIDI E. BORDERS No. C64194 Exp. 6-30-15 CIVIL STATE OF CALIFORNIA

THE STATE OF CALIFORNIA OR ITS OFFICERS OR AGENTS SHALL NOT BE RESPONSIBLE FOR THE ACCURACY OR COMPLETENESS OF SCANNED COPIES OF THIS PLAN SHEET.

NOTE:

1. FOR ACCURATE RIGHT OF WAY DATA, CONTACT RIGHT OF WAY ENGINEERING AT THE DISTRICT OFFICE.

LEGEND:

- CURB RAMP GROOVING
- DETECTABLE WARNING SURFACE
- COLD PLANE AC PAVEMENT
- TRIM LINE
- # CURB RAMP NUMBER

ABBREVIATIONS:

TBC	TOP BACK OF CURB
TRC	TOP OF RETAINING CURB
CPACP	COLD PLANE ASPHALT CONCRETE PAVEMENT
(E)	EXISTING

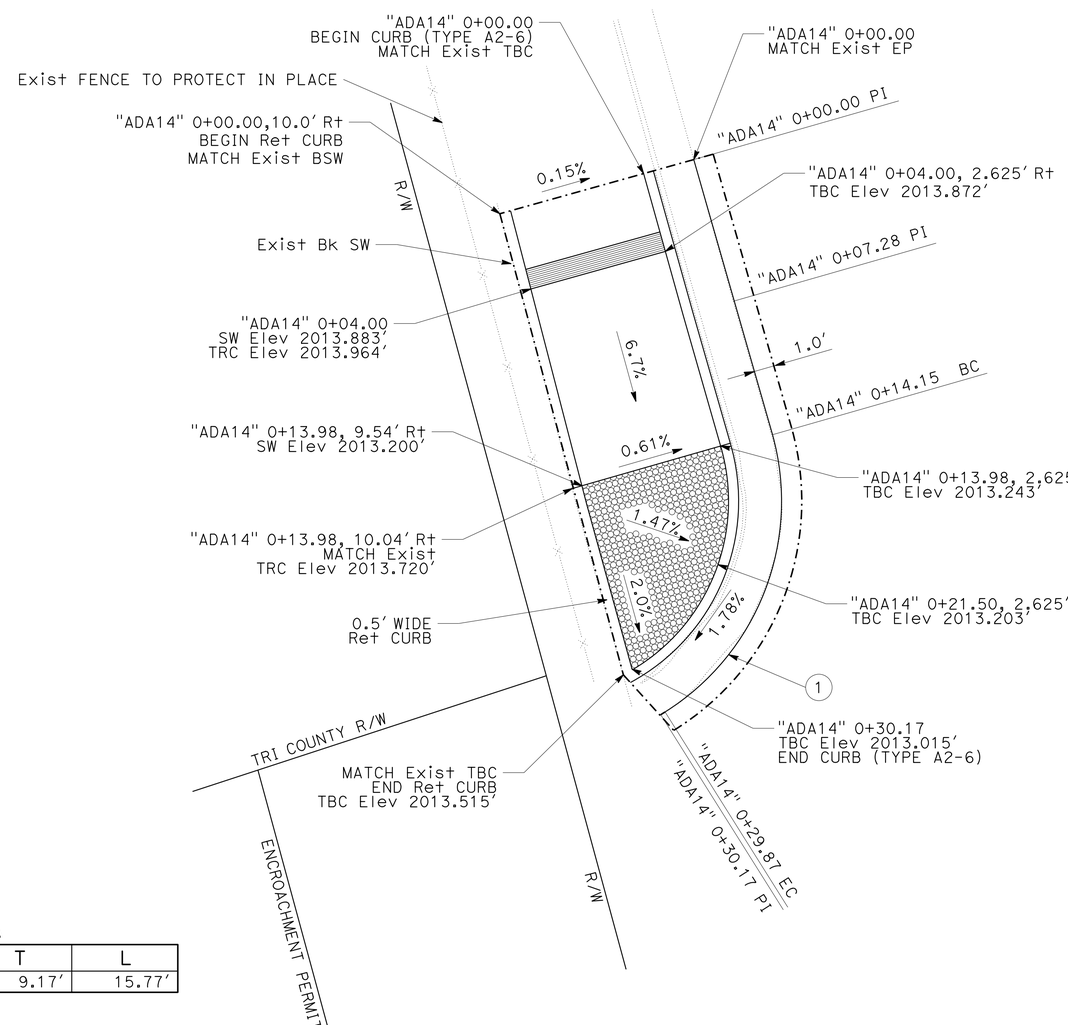

CURVE DATA

No. ⊕	R	Δ	T	L
1	12.3'	73°20'18"	9.17'	15.77'

CURB RAMP 14

PM 51.69
ROUTE 299 & LORENZ Rd

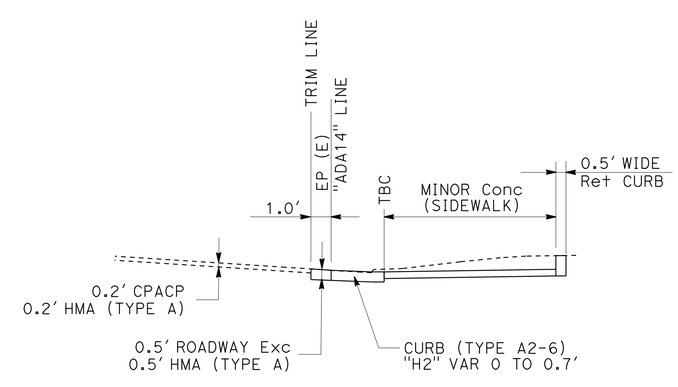

TYPICAL SECTION

NOTE: THERE IS A 5.0' TRANSITION FROM MATCH EXIST CURB TO CURB (TYPE A2-6).

FOR DETAILS NOT SHOWN SEE STD PLANS

CONSTRUCTION DETAILS

NO SCALE

C-10

REVISED BY	DATE REVISED

CALCULATED-DESIGNED BY: JEANNIE STEFFAN
CHECKED BY: HEIDI BORDERS
FUNCTIONAL SUPERVISOR: JULIE CASEY

STATE OF CALIFORNIA - DEPARTMENT OF TRANSPORTATION
Caltrans DESIGN

P:\proj1\02\3E770_plans\pse\23e770ga010.dgn

LAST REVISION 11-25-14 | DATE PLOTTED => 15-JAN-2015 | TIME PLOTTED => 16:07

Dist	COUNTY	ROUTE	POST MILES TOTAL PROJECT	SHEET No.	TOTAL SHEETS
02	Tri	299	36.9/53.5	15	165

Heidi Borders 11-25-14
REGISTERED CIVIL ENGINEER DATE

11-26-14
PLANS APPROVAL DATE

REGISTERED PROFESSIONAL ENGINEER HEIDI E. BORDERS No. C64194 Exp. 6-30-15 CIVIL STATE OF CALIFORNIA

THE STATE OF CALIFORNIA OR ITS OFFICERS OR AGENTS SHALL NOT BE RESPONSIBLE FOR THE ACCURACY OR COMPLETENESS OF SCANNED COPIES OF THIS PLAN SHEET.

NOTE:

1. FOR ACCURATE RIGHT OF WAY DATA, CONTACT RIGHT OF WAY ENGINEERING AT THE DISTRICT OFFICE.

ABBREVIATIONS:

TBC	TOP BACK OF CURB
TRC	TOP OF RETAINING CURB
CPACP	COLD PLANE ASPHALT CONCRETE PAVEMENT
(E)	EXISTING

LEGEND:

- CURB RAMP GROOVING
- DETECTABLE WARNING SURFACE
- COLD PLANE AC PAVEMENT
- TRIM LINE
- # CURB RAMP NUMBER

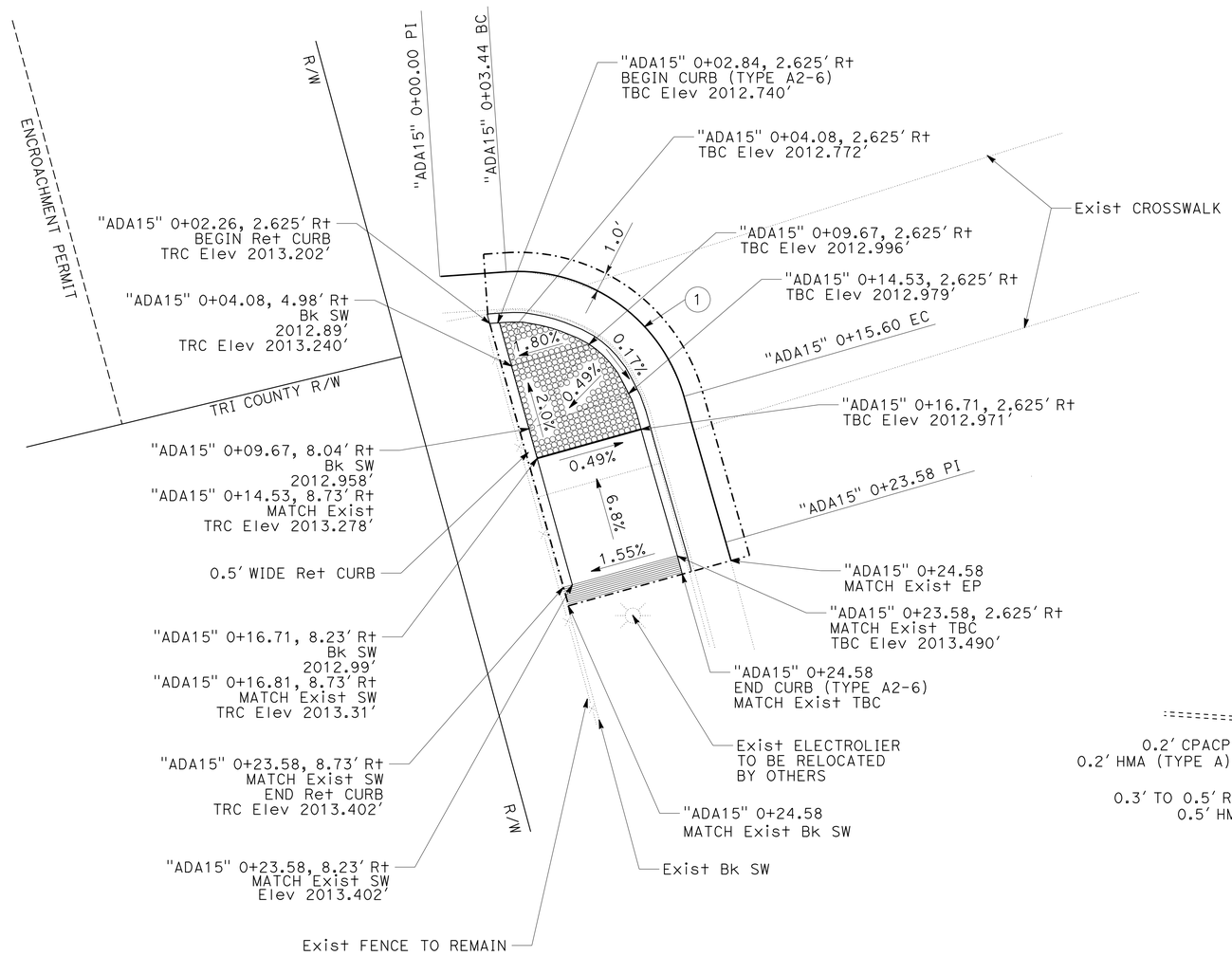

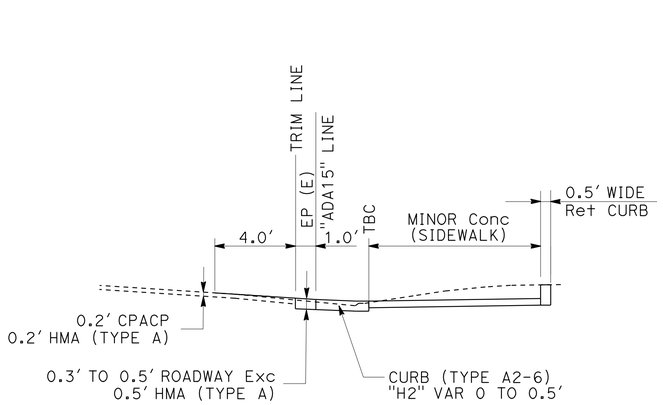

TYPICAL SECTION

FOR DETAILS NOT SHOWN
SEE STD PLANS

CURVE DATA

No. ⊕	R	Δ	T	L
1	9.0'	77°59'00"	7.29'	12.25'

CURB RAMP 15

PM 51.69
ROUTE 299 & LORENZ Rd

CONSTRUCTION DETAILS

NO SCALE

C-11

REVISED BY | DATE REVISED
JEANNIE STEFFAN | HEIDI BORDERS
CALCULATED-DESIGNED BY | CHECKED BY
FUNCTIONAL SUPERVISOR
JULIE CASEY

STATE OF CALIFORNIA - DEPARTMENT OF TRANSPORTATION
Caltrans
DESIGN

P:\proj1\02\3E770_plans\pse\23e770ga011.dgn

LAST REVISION | DATE PLOTTED => 15-JAN-2015
11-25-14 | TIME PLOTTED => 16:07

Dist	COUNTY	ROUTE	POST MILES TOTAL PROJECT	SHEET No.	TOTAL SHEETS
02	Tri	299	36.9/53.5	16	165

Heidi Borders 11-25-14
REGISTERED CIVIL ENGINEER DATE

11-26-14
PLANS APPROVAL DATE

REGISTERED PROFESSIONAL ENGINEER HEIDI E. BORDERS No. C64194 Exp. 6-30-15 CIVIL STATE OF CALIFORNIA

THE STATE OF CALIFORNIA OR ITS OFFICERS OR AGENTS SHALL NOT BE RESPONSIBLE FOR THE ACCURACY OR COMPLETENESS OF SCANNED COPIES OF THIS PLAN SHEET.

NOTE:

1. FOR ACCURATE RIGHT OF WAY DATA, CONTACT RIGHT OF WAY ENGINEERING AT THE DISTRICT OFFICE.

ABBREVIATIONS:

TBC	TOP BACK OF CURB
TRC	TOP OF RETAINING CURB
CPACP	COLD PLANE ASPHALT CONCRETE PAVEMENT
(E)	EXISTING

LEGEND:

- CURB RAMP GROOVING
- DETECTABLE WARNING SURFACE
- COLD PLANE AC PAVEMENT
- TRIM LINE
- # CURB RAMP NUMBER

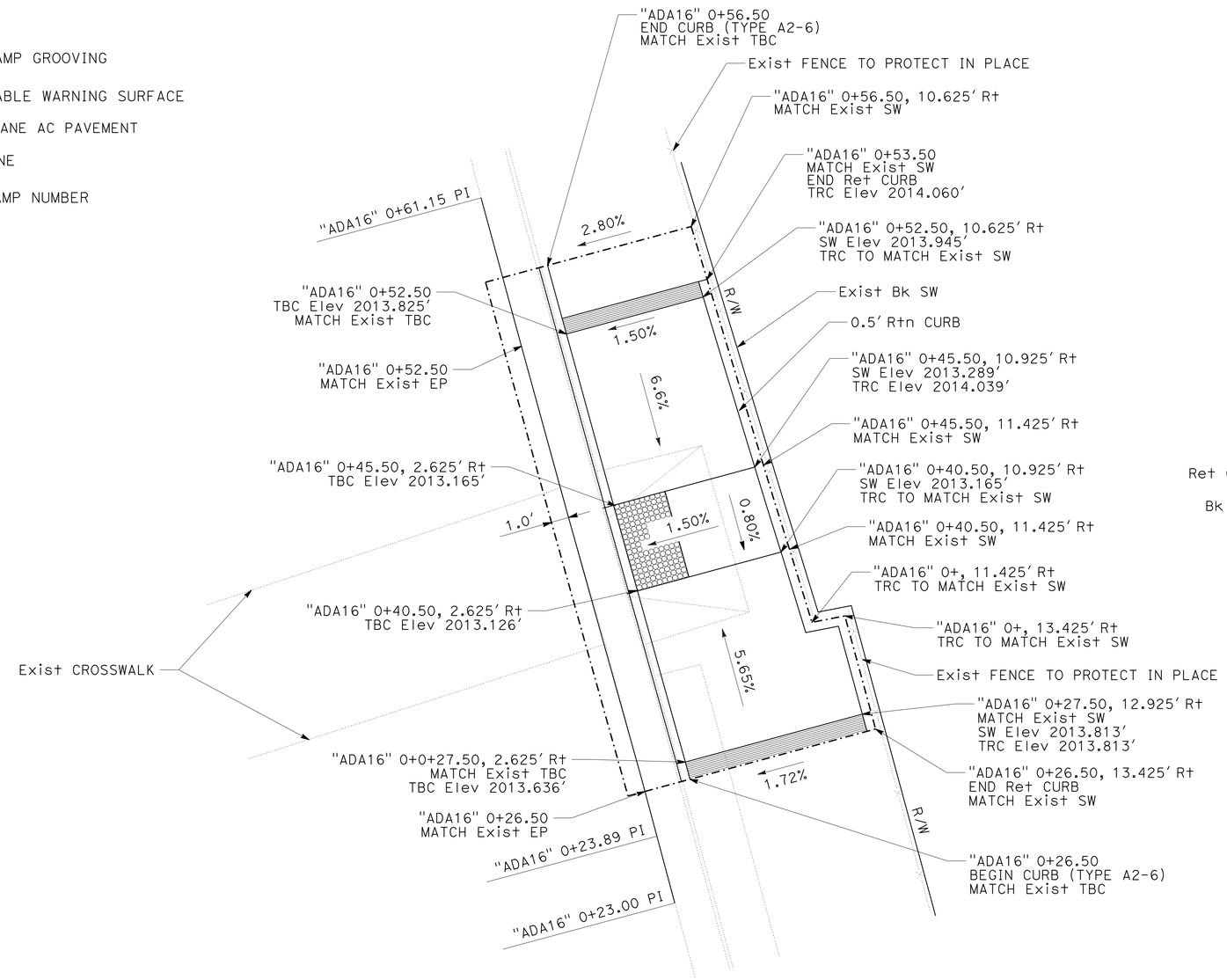

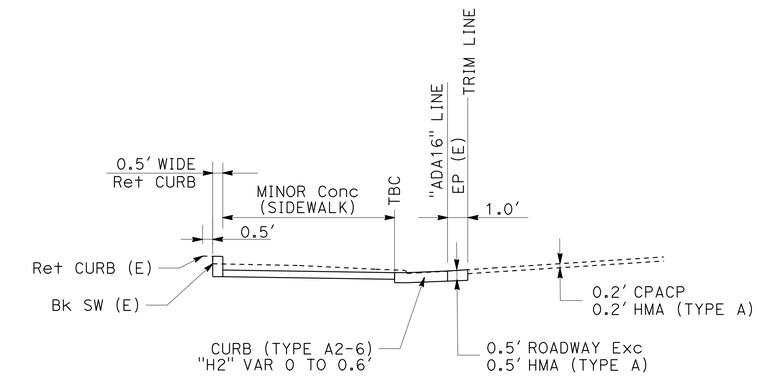

TYPICAL SECTION

NOTE: THERE WILL A 5.0' TRANSITION FROM MATCH EXIST CURB TO CURB (TYPE A2-6).

FOR DETAILS NOT SHOWN SEE STD PLANS

CURB RAMP 16

PM 51.69
ROUTE 299 & LORENZ Rd

NOTE: TRIMLINE SHALL MAINTAIN A MINIMUM DISTANCE OF 6" FROM EXIST BACK OF SIDEWALK

CONSTRUCTION DETAILS

NO SCALE

C-12

REVISED BY | DATE REVISED
JEANNIE STEFFAN | HEIDI BORDERS
CALCULATED-DESIGNED BY | CHECKED BY
FUNCTIONAL SUPERVISOR
JULIE CASEY

STATE OF CALIFORNIA - DEPARTMENT OF TRANSPORTATION
Caltrans
DESIGN

P:\proj1\02\3E770_plans\pse\23e770ga012.dgn

LAST REVISION 11-25-14 | DATE PLOTTED => 15-JAN-2015 | TIME PLOTTED => 16:07

Dist	COUNTY	ROUTE	POST MILES TOTAL PROJECT	SHEET No.	TOTAL SHEETS
02	Tri	299	36.9/53.5	17	165

Heidi Borders 11-25-14
REGISTERED CIVIL ENGINEER DATE

11-26-14
PLANS APPROVAL DATE

HEIDI E. BORDERS No. C64194 Exp. 6-30-15 CIVIL
REGISTERED PROFESSIONAL ENGINEER STATE OF CALIFORNIA

THE STATE OF CALIFORNIA OR ITS OFFICERS OR AGENTS SHALL NOT BE RESPONSIBLE FOR THE ACCURACY OR COMPLETENESS OF SCANNED COPIES OF THIS PLAN SHEET.

NOTE:

1. FOR ACCURATE RIGHT OF WAY DATA, CONTACT RIGHT OF WAY ENGINEERING AT THE DISTRICT OFFICE.

LEGEND:

- CURB RAMP GROOVING
- DETECTABLE WARNING SURFACE
- COLD PLANE AC PAVEMENT
- TRIM LINE
- # CURB RAMP NUMBER

ABBREVIATIONS:

TBC	TOP BACK OF CURB
TRC	TOP OF RETAINING CURB
CPACP	COLD PLANE ASPHALT CONCRETE PAVEMENT
(E)	EXISTING

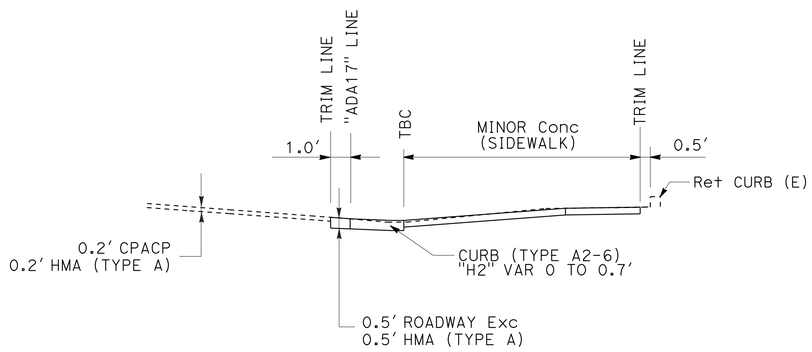

TYPICAL SECTION

FOR DETAILS NOT SHOWN SEE STD PLANS

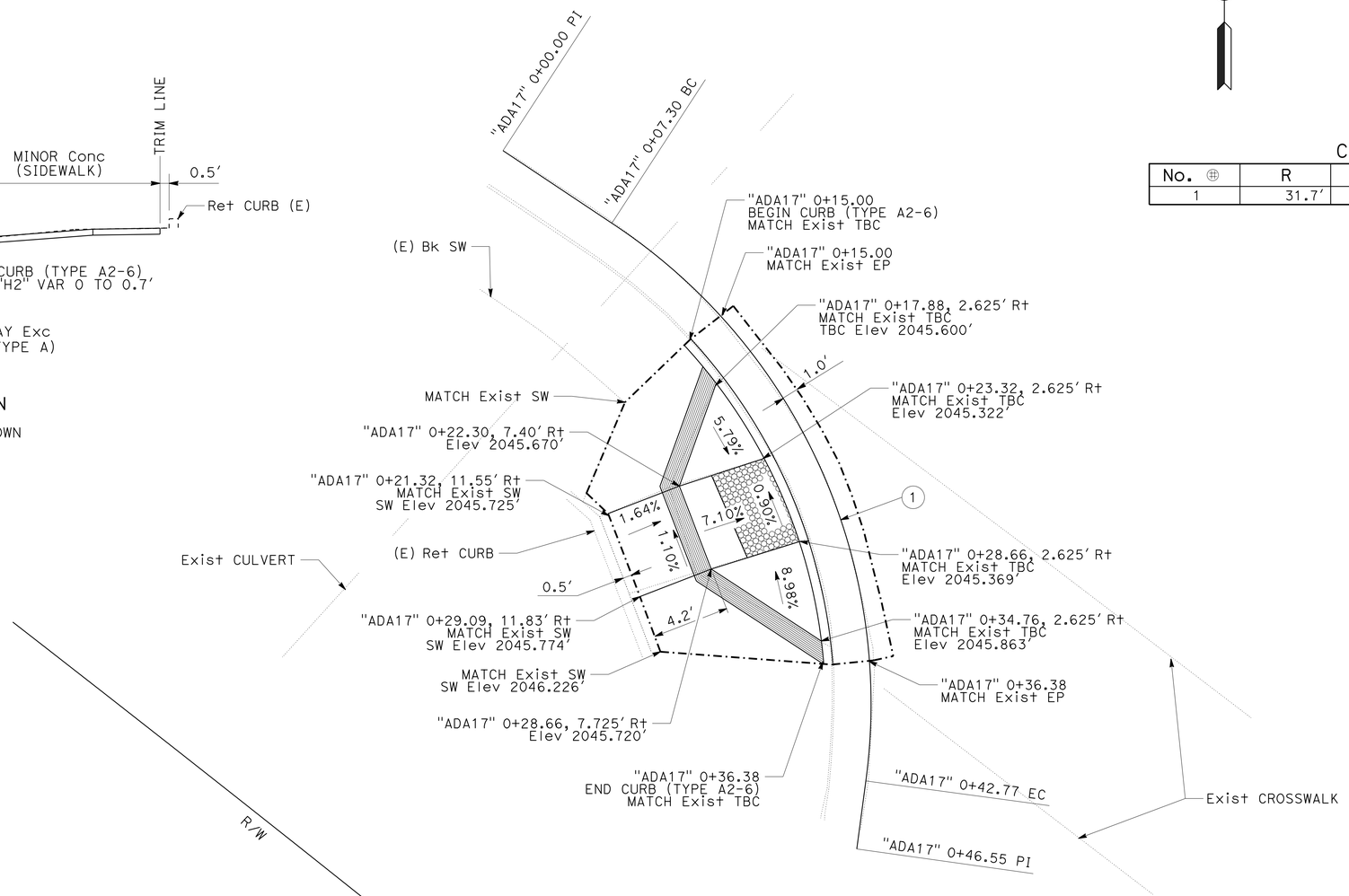

CURVE DATA

No. ⊕	R	Δ	T	L
1	31.7'	64°21'34"	19.96'	35.63'

CURB RAMP 17

PM 51.422
ROUTE 299 & FOREST Ave

NOTE: TRIMLINE SHALL MAINTAIN A MINIMUM DISTANCE OF 6" FROM EXIST RETAINING WALL

CONSTRUCTION DETAILS

NO SCALE

C-13

REVISED BY	DATE REVISED
JEANNIE STEFFAN	HEIDI BORDERS
CALCULATED-DESIGNED BY	CHECKED BY
FUNCTIONAL SUPERVISOR	JULIE CASEY

STATE OF CALIFORNIA - DEPARTMENT OF TRANSPORTATION
Caltrans DESIGN

P:\proj1\02\3E770_plans\pse\23e770ga013.dgn

LAST REVISION 11-25-14 | DATE PLOTTED => 15-JAN-2015 | TIME PLOTTED => 16:07

Dist	COUNTY	ROUTE	POST MILES TOTAL PROJECT	SHEET No.	TOTAL SHEETS
02	Tri	299	36.9/53.5	18	165

Heidi Borders 11-25-14
REGISTERED CIVIL ENGINEER DATE

11-26-14
PLANS APPROVAL DATE

REGISTERED PROFESSIONAL ENGINEER HEIDI E. BORDERS No. C64194 Exp. 6-30-15 CIVIL STATE OF CALIFORNIA

THE STATE OF CALIFORNIA OR ITS OFFICERS OR AGENTS SHALL NOT BE RESPONSIBLE FOR THE ACCURACY OR COMPLETENESS OF SCANNED COPIES OF THIS PLAN SHEET.

NOTE:

1. FOR ACCURATE RIGHT OF WAY DATA, CONTACT RIGHT OF WAY ENGINEERING AT THE DISTRICT OFFICE.

LEGEND:

- CURB RAMP GROOVING
- DETECTABLE WARNING SURFACE
- COLD PLANE AC PAVEMENT
- TRIM LINE
- # CURB RAMP NUMBER

ABBREVIATIONS:

TBC	TOP BACK OF CURB
TRC	TOP OF RETAINING CURB
CPACP	COLD PLANE ASPHALT CONCRETE PAVEMENT
(E)	EXISTING

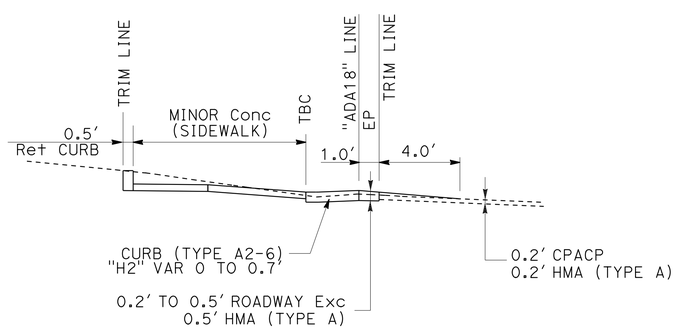

TYPICAL SECTION

FOR DETAILS NOT SHOWN
SEE STD PLANS

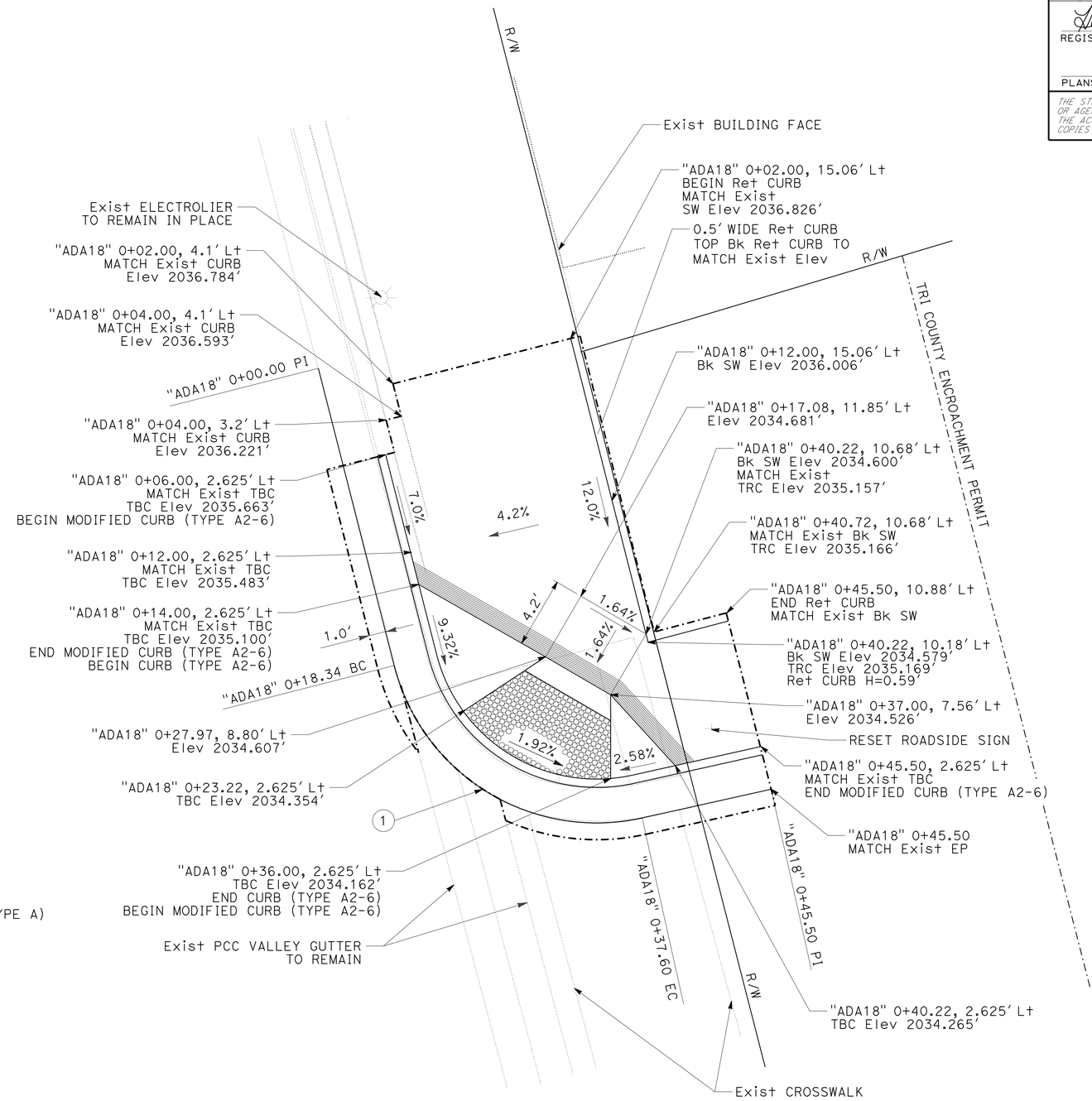

CURVE DATA

No. ⊕	R	Δ	T	L
1	12.5′	88°15′12"	12.12′	19.25′

CURB RAMP 18

PM 51.56
ROUTE 299 & Hwy 3

NOTE: TRIMLINE SHALL MAINTAIN A MINIMUM DISTANCE OF 6" FROM EXIST BUILDING

CONSTRUCTION DETAILS

NO SCALE

C-14

STATE OF CALIFORNIA - DEPARTMENT OF TRANSPORTATION
DESIGN
FUNCTIONAL SUPERVISOR: JULIE CASEY
CALCULATED-DESIGNED BY: JEANNIE STEFFAN
CHECKED BY: HEIDI BORDERS
REVISED BY / DATE REVISED

P:\proj1\02\3E770_plans\pse\23e770ga014.dgn

LAST REVISION 11-25-14 | DATE PLOTTED => 15-JAN-2015 | TIME PLOTTED => 16:08

Dist	COUNTY	ROUTE	POST MILES TOTAL PROJECT	SHEET No.	TOTAL SHEETS
02	Tri	299	36.9/53.5	19	165

Heidi Borders 11-25-14
REGISTERED CIVIL ENGINEER DATE

11-26-14
PLANS APPROVAL DATE

REGISTERED PROFESSIONAL ENGINEER HEIDI E. BORDERS No. C64194 Exp. 6-30-15 CIVIL STATE OF CALIFORNIA

THE STATE OF CALIFORNIA OR ITS OFFICERS OR AGENTS SHALL NOT BE RESPONSIBLE FOR THE ACCURACY OR COMPLETENESS OF SCANNED COPIES OF THIS PLAN SHEET.

NOTE:

1. FOR ACCURATE RIGHT OF WAY DATA, CONTACT RIGHT OF WAY ENGINEERING AT THE DISTRICT OFFICE.

LEGEND:

- CURB RAMP GROOVING
- DETECTABLE WARNING SURFACE
- COLD PLANE AC PAVEMENT
- TRIM LINE
- # CURB RAMP NUMBER
- AREA TO REMAIN UNPAVED

ABBREVIATIONS:

TBC	TOP BACK OF CURB
TRC	TOP OF RETAINING CURB
CPACP	COLD PLANE ASPHALT CONCRETE PAVEMENT
(E)	EXISTING

CURVE DATA

No. ⊕	R	Δ	T	L
1	5.0′	42°30′32"	1.94′	3.71′
2	5.0′	33°55′25"	1.53′	2.96′
3	6.5′	135°43′16"	15.98′	15.40′
4	5.0′	44°53′41"	2.07′	3.92′

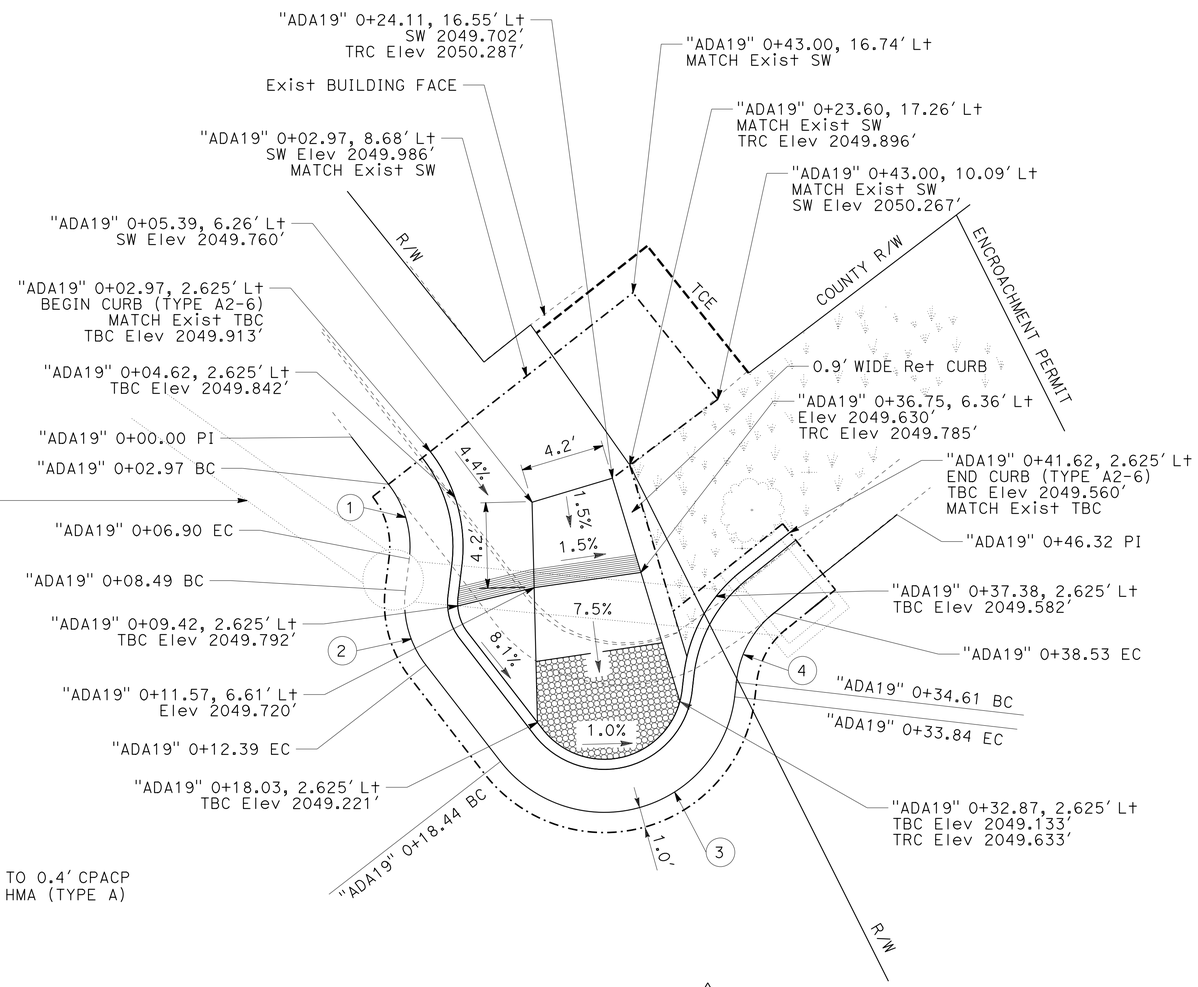

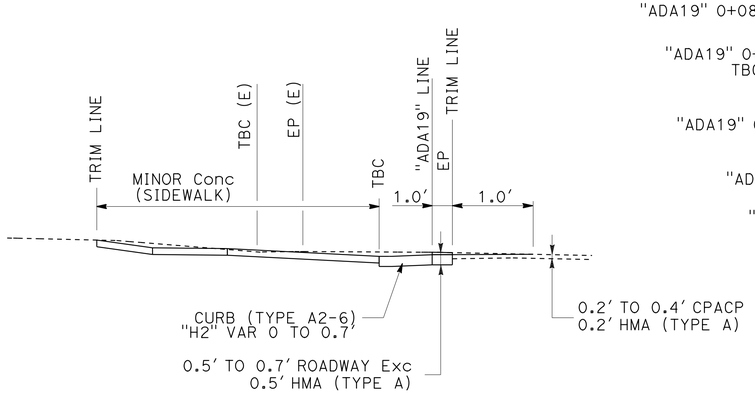

TYPICAL SECTION

FOR DETAILS NOT SHOWN
SEE STD PLANS

CURB RAMP 19

PM 51.469
ROUTE 299 & COURT St

NOTE: TRIMLINE SHALL MAINTAIN A MINIMUM DISTANCE OF 6" FROM EXIST BUILDING FACE

CONSTRUCTION DETAILS

NO SCALE

C-15

STATE OF CALIFORNIA - DEPARTMENT OF TRANSPORTATION
Caltrans
DESIGN

FUNCTIONAL SUPERVISOR: JULIE CASEY
CALCULATED-DESIGNED BY: JEANNIE STEFFAN
CHECKED BY: HEIDI BORDERS
REVISED BY
DATE REVISED

P:\proj\02\3E770_plans\pse\23e770ga015.dgn

LAST REVISION 11-25-14
DATE PLOTTED => 15-JAN-2015
TIME PLOTTED => 16:08

Dist	COUNTY	ROUTE	POST MILES TOTAL PROJECT	SHEET No.	TOTAL SHEETS
02	Tri	299	36.9/53.5	20	165

Heidi Borders 11-25-14
REGISTERED CIVIL ENGINEER DATE

11-26-14
PLANS APPROVAL DATE

REGISTERED PROFESSIONAL ENGINEER HEIDI E. BORDERS No. C64194 Exp. 6-30-15 CIVIL STATE OF CALIFORNIA

THE STATE OF CALIFORNIA OR ITS OFFICERS OR AGENTS SHALL NOT BE RESPONSIBLE FOR THE ACCURACY OR COMPLETENESS OF SCANNED COPIES OF THIS PLAN SHEET.

NOTE:

1. FOR ACCURATE RIGHT OF WAY DATA, CONTACT RIGHT OF WAY ENGINEERING AT THE DISTRICT OFFICE.

CURVE DATA

No. ⊕	R	Δ	T	L
1	12.5′	84°25′40″	11.34′	18.42′

ABBREVIATIONS:

TBC	TOP BACK OF CURB
TRC	TOP OF RETAINING CURB
CPACP	COLD PLANE ASPHALT CONCRETE PAVEMENT
(E)	EXISTING

LEGEND:

- CURB RAMP GROOVING
- DETECTABLE WARNING SURFACE
- COLD PLANE AC PAVEMENT
- TRIM LINE
- CURB RAMP NUMBER
- AREA TO REMAIN UNPAVED

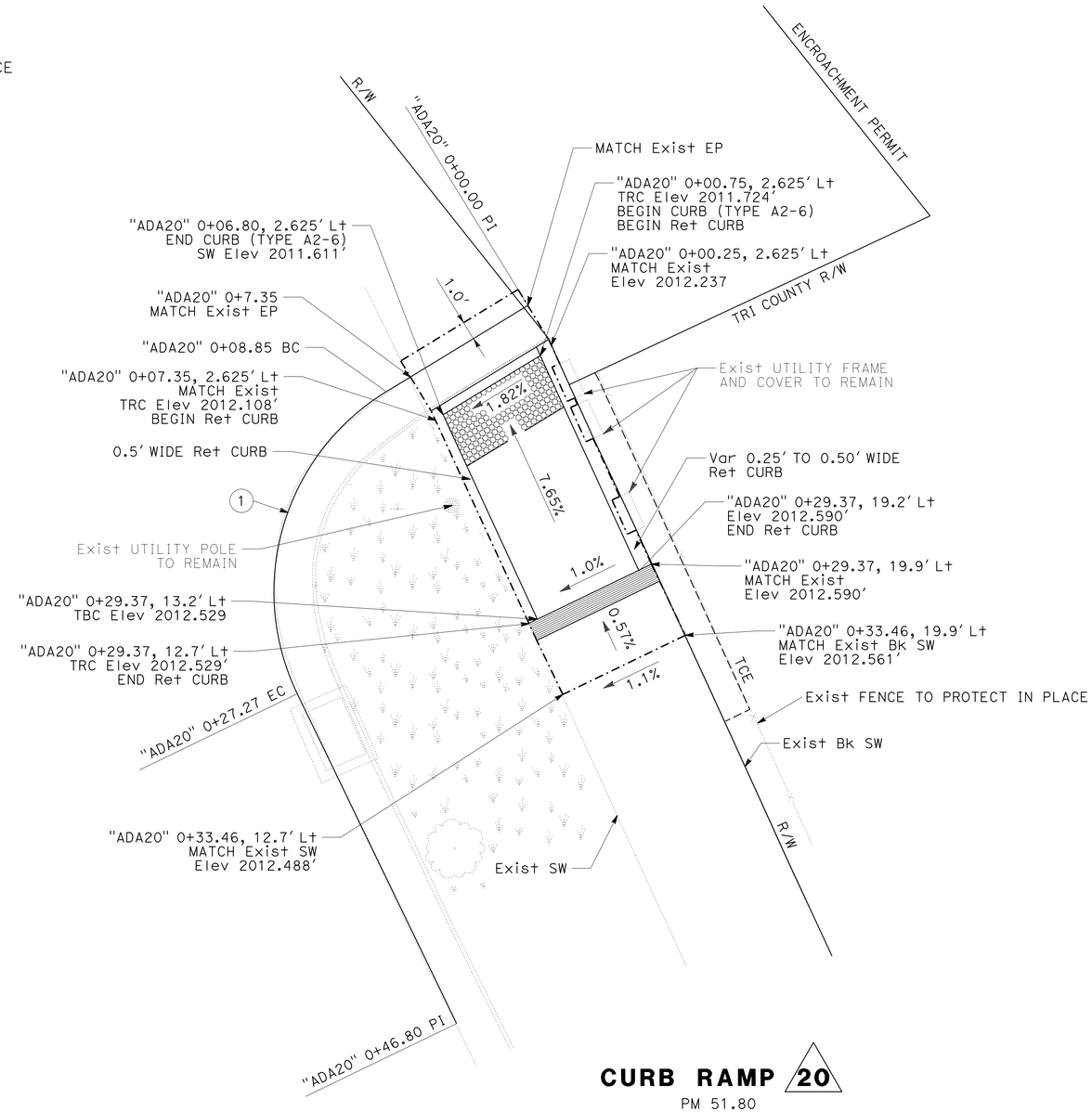

CURB RAMP 20
PM 51.80
ROUTE 299 & CENTER St

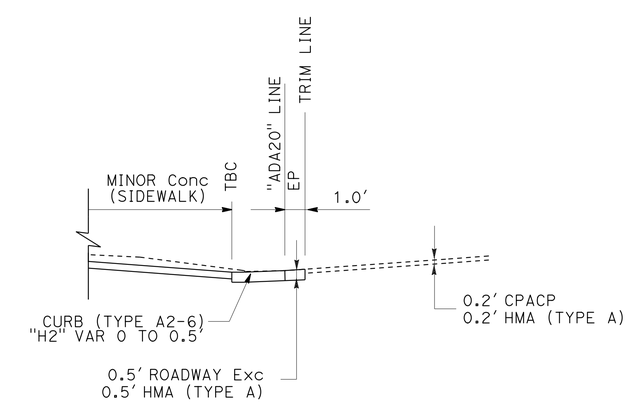

TYPICAL SECTION
FOR DETAILS NOT SHOWN
SEE STD PLANS

CONSTRUCTION DETAILS
NO SCALE

C-16

REVISED BY | DATE REVISED
JEANNIE STEFFAN | HEIDI BORDERS
CALCULATED-DESIGNED BY | CHECKED BY
FUNCTIONAL SUPERVISOR
JULIE CASEY

STATE OF CALIFORNIA - DEPARTMENT OF TRANSPORTATION
Caltrans
DESIGN

P:\proj1\02\3E770_plans\pse\23e770ga016.dgn

LAST REVISION 11-25-14 | DATE PLOTTED => 15-JAN-2015 | TIME PLOTTED => 16:08

Dist	COUNTY	ROUTE	POST MILES TOTAL PROJECT	SHEET No.	TOTAL SHEETS
02	Tri	299	36.9/53.5	21	165

Heidi Borders 11-25-14
REGISTERED CIVIL ENGINEER DATE

11-26-14
PLANS APPROVAL DATE

REGISTERED PROFESSIONAL ENGINEER HEIDI E. BORDERS No. C64194 Exp. 6-30-15 CIVIL STATE OF CALIFORNIA

THE STATE OF CALIFORNIA OR ITS OFFICERS OR AGENTS SHALL NOT BE RESPONSIBLE FOR THE ACCURACY OR COMPLETENESS OF SCANNED COPIES OF THIS PLAN SHEET.

NOTE:

1. FOR ACCURATE RIGHT OF WAY DATA, CONTACT RIGHT OF WAY ENGINEERING AT THE DISTRICT OFFICE.

LEGEND:

- CURB RAMP GROOVING
- DETECTABLE WARNING SURFACE
- COLD PLANE AC PAVEMENT
- TRIM LINE
- # CURB RAMP NUMBER

ABBREVIATIONS:

TBC	TOP BACK OF CURB
TRC	TOP OF RETAINING CURB
CPACP	COLD PLANE ASPHALT CONCRETE PAVEMENT
(E)	EXISTING

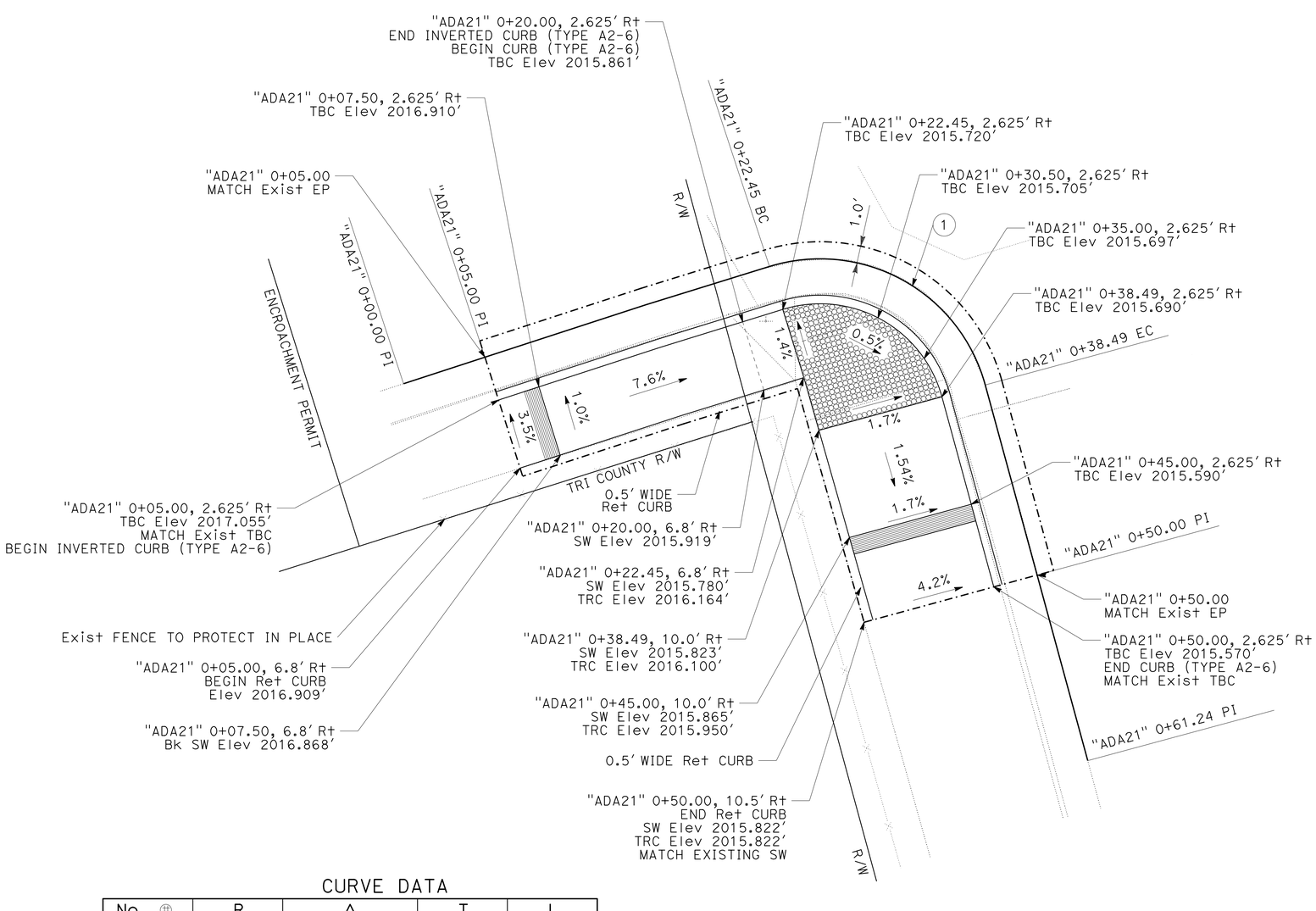

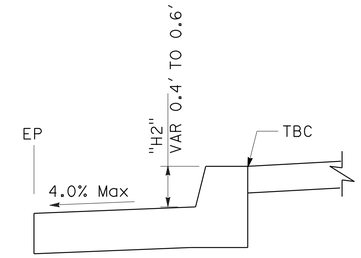

INVERTED CURB (TYPE A2-6)

"ADA21" 0+05.00 TO 0+20.00

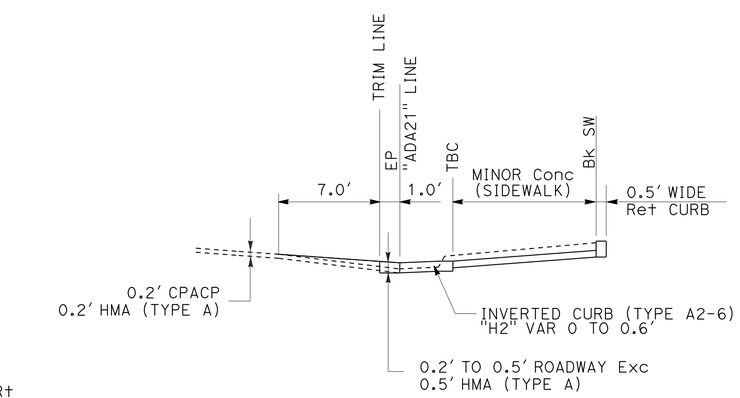

TYPICAL SECTION

FOR DETAILS NOT SHOWN
SEE STD PLANS

CURVE DATA

No. ⊕	R	Δ	T	L
1	10.0'	91°56'54"	10.35'	16.05'

CURB RAMP 21

PM 51.63
ROUTE 299 & OREGON St

CONSTRUCTION DETAILS

NO SCALE

C-17

REVISED BY	DATE REVISED
JEANNIE STEFFAN	HEIDI BORDERS
CALCULATED-DESIGNED BY	CHECKED BY
FUNCTIONAL SUPERVISOR	JULIE CASEY

STATE OF CALIFORNIA - DEPARTMENT OF TRANSPORTATION
Caltrans
DESIGN

P:\proj1\02\3E770_plans\pse\23e770ga017.dgn

LAST REVISION 11-25-14 | DATE PLOTTED => 15-JAN-2015 | TIME PLOTTED => 16:08

Dist	COUNTY	ROUTE	POST MILES TOTAL PROJECT	SHEET No.	TOTAL SHEETS
02	Tri	299	36.9/53.5	22	165

Heidi Borders 11-25-14
REGISTERED CIVIL ENGINEER DATE

11-26-14
PLANS APPROVAL DATE

REGISTERED PROFESSIONAL ENGINEER HEIDI E. BORDERS No. C64194 Exp. 6-30-15 CIVIL STATE OF CALIFORNIA

THE STATE OF CALIFORNIA OR ITS OFFICERS OR AGENTS SHALL NOT BE RESPONSIBLE FOR THE ACCURACY OR COMPLETENESS OF SCANNED COPIES OF THIS PLAN SHEET.

NOTE:

1. FOR ACCURATE RIGHT OF WAY DATA, CONTACT RIGHT OF WAY ENGINEERING AT THE DISTRICT OFFICE.

LEGEND:

- CURB RAMP GROOVING
- DETECTABLE WARNING SURFACE
- COLD PLANE AC PAVEMENT
- TRIM LINE
- # CURB RAMP NUMBER

ABBREVIATIONS:

TBC	TOP BACK OF CURB
TRC	TOP OF RETAINING CURB
CPACP	COLD PLANE ASPHALT CONCRETE PAVEMENT
(E)	EXISTING

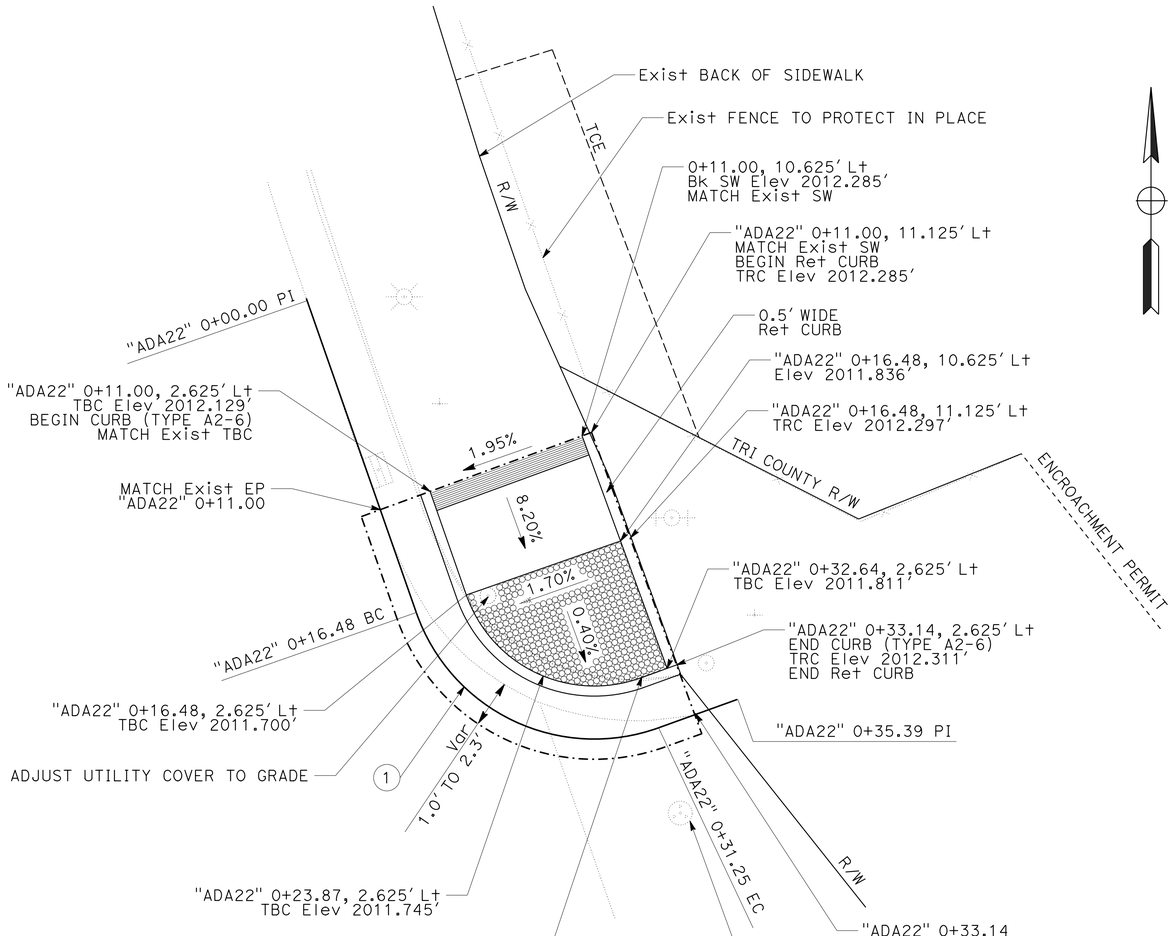

CURB RAMP 22

PM 51.80
ROUTE 299 & CENTER St

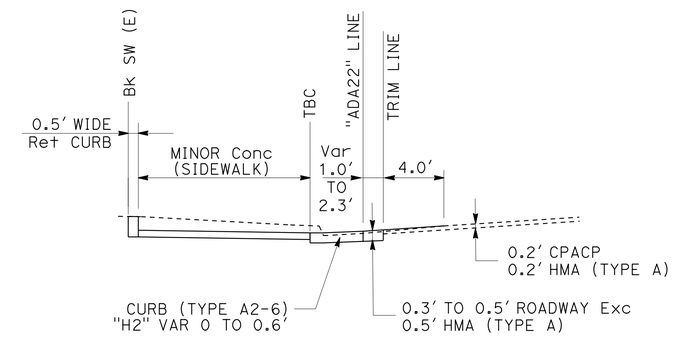

TYPICAL SECTION

NOTE: THERE IS A 5.0' TRANSITION FROM MATCH EXIST CURB TO CURB (TYPE A2-6).

FOR DETAILS NOT SHOWN
SEE STD PLANS

CURVE DATA

No. ⊕	R	Δ	T	L
1	9.3'	90°33'54"	9.43'	14.76'

CONSTRUCTION DETAILS

NO SCALE

C-18

REVISED BY | DATE REVISED
JEANNIE STEFFAN | HEIDI BORDERS
CALCULATED-DESIGNED BY | CHECKED BY
FUNCTIONAL SUPERVISOR: JULIE CASEY

STATE OF CALIFORNIA - DEPARTMENT OF TRANSPORTATION
Caltrans
DESIGN

P:\proj1\02\3E770_plans\pse\23e770ga018.dgn

LAST REVISION 11-25-14 | DATE PLOTTED => 15-JAN-2015 | TIME PLOTTED => 16:08

Dist	COUNTY	ROUTE	POST MILES TOTAL PROJECT	SHEET No.	TOTAL SHEETS
02	Tri	299	36.9/53.5	23	165

Heidi Borders 11-25-14
REGISTERED CIVIL ENGINEER DATE

11-26-14
PLANS APPROVAL DATE

HEIDI E. BORDERS No. C64194 Exp. 6-30-15 CIVIL STATE OF CALIFORNIA REGISTERED PROFESSIONAL ENGINEER

THE STATE OF CALIFORNIA OR ITS OFFICERS OR AGENTS SHALL NOT BE RESPONSIBLE FOR THE ACCURACY OR COMPLETENESS OF SCANNED COPIES OF THIS PLAN SHEET.

NOTE:

1. FOR ACCURATE RIGHT OF WAY DATA, CONTACT RIGHT OF WAY ENGINEERING AT THE DISTRICT OFFICE.

LEGEND:

- CURB RAMP GROOVING
- DETECTABLE WARNING SURFACE
- COLD PLANE AC PAVEMENT
- TRIM LINE
- # CURB RAMP NUMBER

ABBREVIATIONS:

TBC	TOP BACK OF CURB
TRC	TOP OF RETAINING CURB
CPACP	COLD PLANE ASPHALT CONCRETE PAVEMENT
(E)	EXISTING

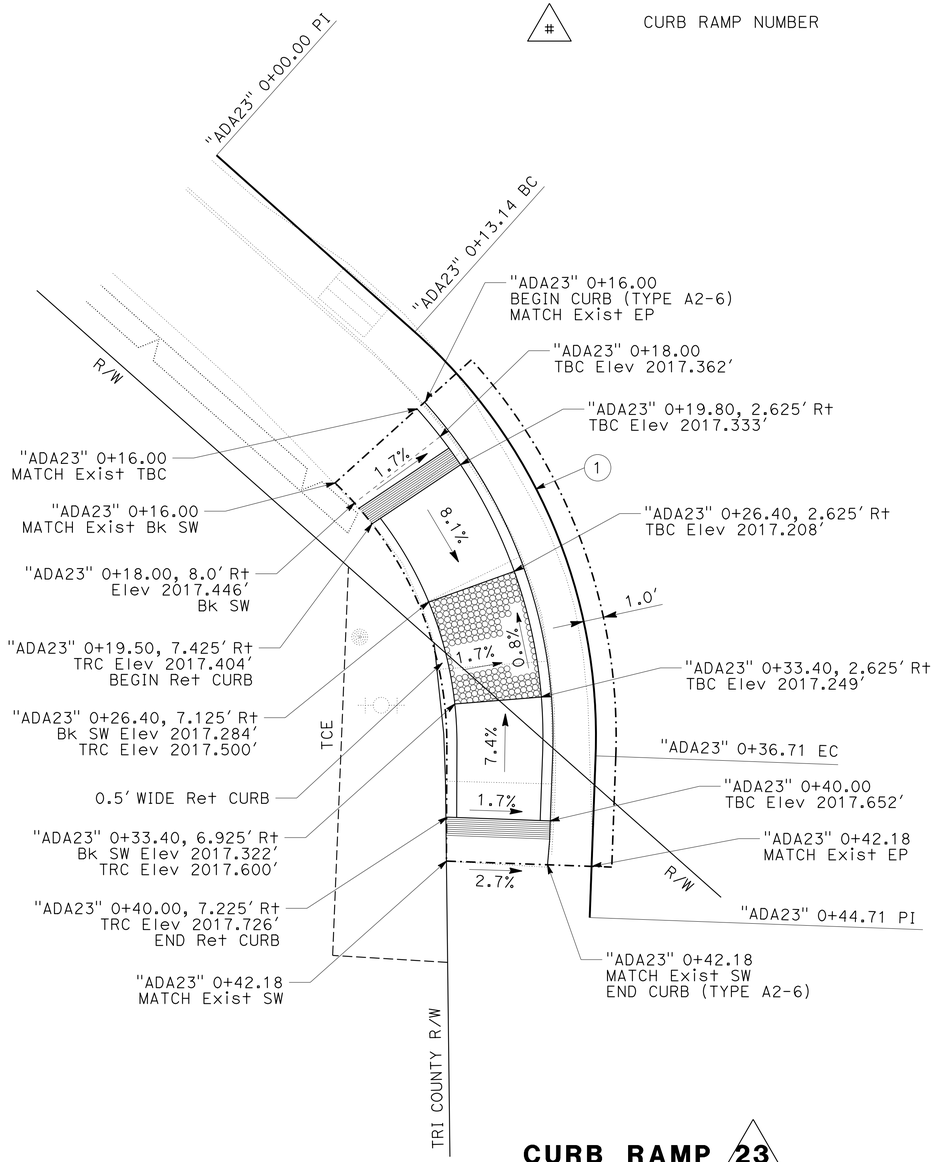

CURB RAMP 23

PM 51.89
ROUTE 299 & MILL St

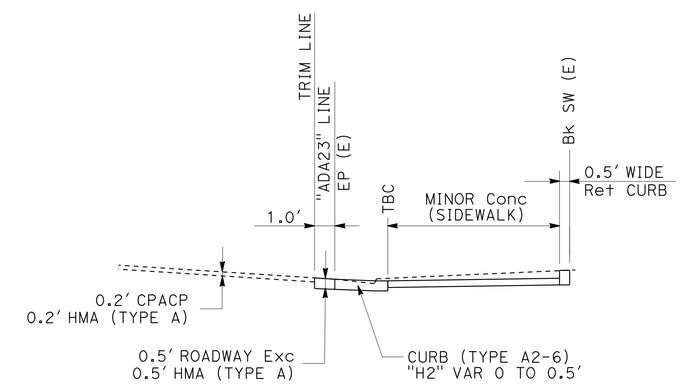

TYPICAL SECTION

FOR DETAILS NOT SHOWN
SEE STD PLANS

CURVE DATA

No. ⊕	R	Δ	T	L
1	26.8'	50°22'27"	12.60'	23.56'

CONSTRUCTION DETAILS

NO SCALE

C-19

REVISED BY | DATE REVISED
JEANNIE STEFFAN | HEIDI BORDERS
CALCULATED-DESIGNED BY | CHECKED BY
FUNCTIONAL SUPERVISOR: JULIE CASEY
STATE OF CALIFORNIA - DEPARTMENT OF TRANSPORTATION
Caltrans DESIGN
P:\proj1\02\3E770_plans\pse\23e770ga019.dgn

LAST REVISION | DATE PLOTTED => 15-JAN-2015
11-25-14 | TIME PLOTTED => 16:08

Dist	COUNTY	ROUTE	POST MILES TOTAL PROJECT	SHEET No.	TOTAL SHEETS
02	Tri	299	36.9/53.5	24	165

Heidi Borders 11-25-14
REGISTERED CIVIL ENGINEER DATE

11-26-14
PLANS APPROVAL DATE

REGISTERED PROFESSIONAL ENGINEER HEIDI E. BORDERS No. C64194 Exp. 6-30-15 CIVIL STATE OF CALIFORNIA

THE STATE OF CALIFORNIA OR ITS OFFICERS OR AGENTS SHALL NOT BE RESPONSIBLE FOR THE ACCURACY OR COMPLETENESS OF SCANNED COPIES OF THIS PLAN SHEET.

NOTE:

1. FOR ACCURATE RIGHT OF WAY DATA, CONTACT RIGHT OF WAY ENGINEERING AT THE DISTRICT OFFICE.

LEGEND:

- CURB RAMP GROOVING
- DETECTABLE WARNING SURFACE
- COLD PLANE AC PAVEMENT
- TRIM LINE
- # CURB RAMP NUMBER

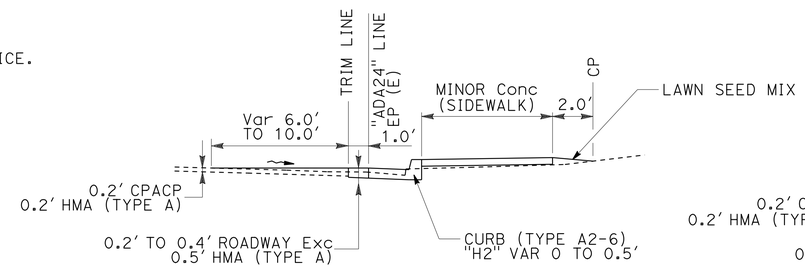

SECTION A-A
(Typ)
FOR DETAILS NOT SHOWN
SEE STD PLANS

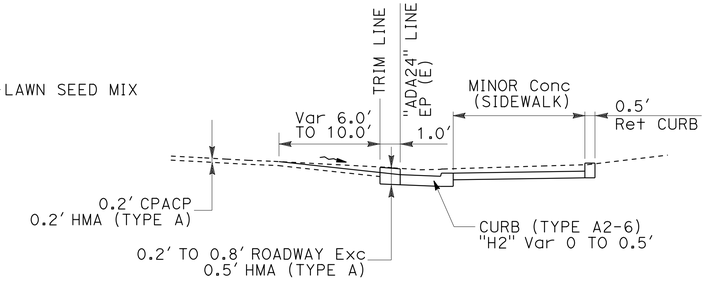

SECTION B-B
(Typ)
FOR DETAILS NOT SHOWN
SEE STD PLANS

ABBREVIATIONS:

TBC	TOP BACK OF CURB
TRC	TOP OF RETAINING CURB
CPACP	COLD PLANE ASPHALT CONCRETE PAVEMENT
(E)	EXISTING

CURVE DATA

No. ⊕	R	Δ	T	L
2	28.4'	87°58'00"	27.41'	43.60'

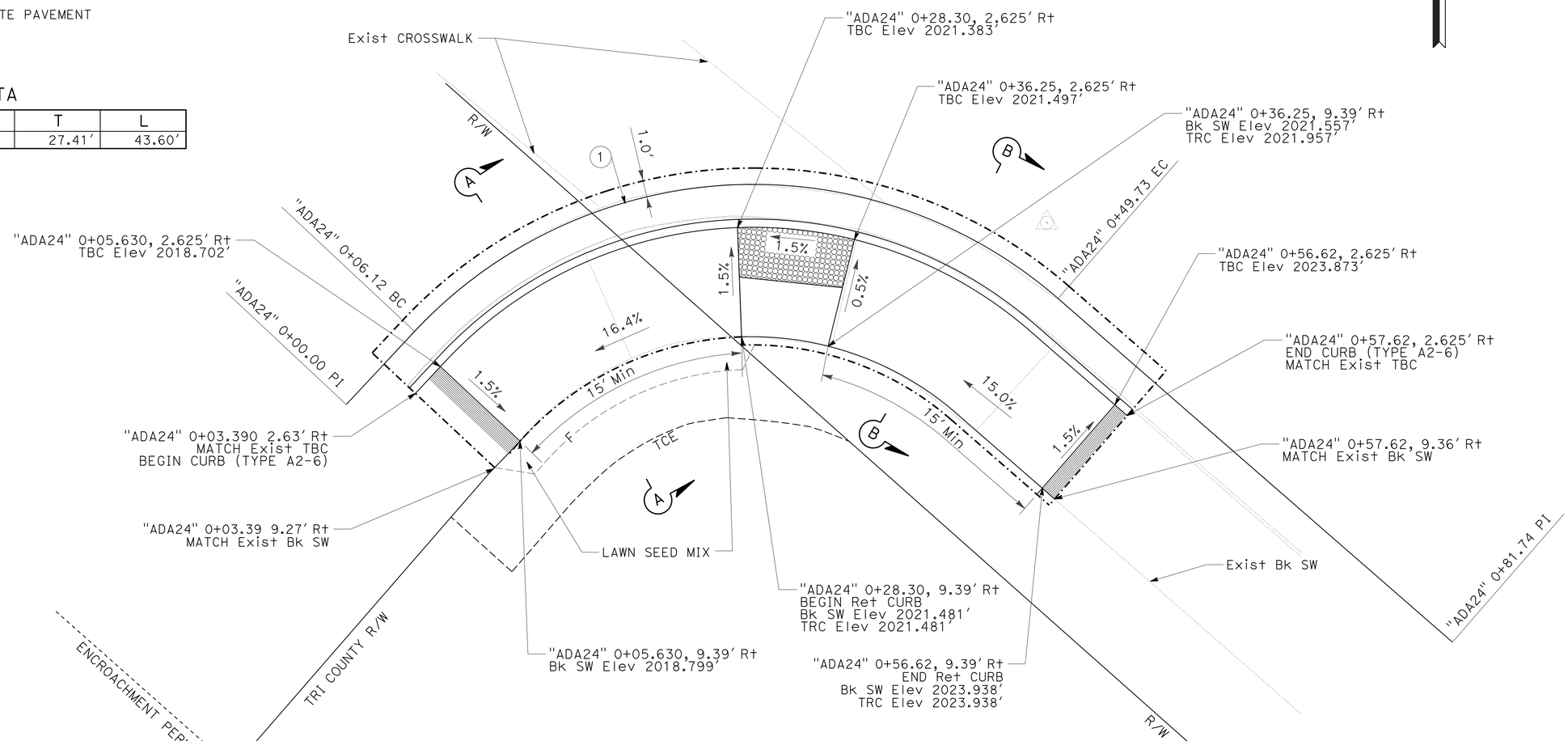

CURB RAMP 24

PM 51.89
ROUTE 299 & MILL St

CONSTRUCTION DETAILS

NO SCALE

C-20

STATE OF CALIFORNIA - DEPARTMENT OF TRANSPORTATION
Caltrans DESIGN
FUNCTIONAL SUPERVISOR: JULIE CASEY
CALCULATED-DESIGNED BY: JEANNIE STEFFAN
CHECKED BY: HEIDI BORDERS
REVISED BY / DATE REVISED

P:\proj1\02\3E770_plans\pse\23e770ga020.dgn

LAST REVISION 11-25-14 | DATE PLOTTED => 15-JAN-2015 | TIME PLOTTED => 16:08

Dist	COUNTY	ROUTE	POST MILES TOTAL PROJECT	SHEET No.	TOTAL SHEETS
02	Tri	299	36.9/53.5	25	165

Heidi Borders 11-25-14
REGISTERED CIVIL ENGINEER DATE

11-26-14
PLANS APPROVAL DATE

REGISTERED PROFESSIONAL ENGINEER HEIDI E. BORDERS No. C64194 Exp. 6-30-15 CIVIL STATE OF CALIFORNIA

THE STATE OF CALIFORNIA OR ITS OFFICERS OR AGENTS SHALL NOT BE RESPONSIBLE FOR THE ACCURACY OR COMPLETENESS OF SCANNED COPIES OF THIS PLAN SHEET.

NOTE:

1. FOR ACCURATE RIGHT OF WAY DATA, CONTACT RIGHT OF WAY ENGINEERING AT THE DISTRICT OFFICE.

LEGEND:

- CURB RAMP GROOVING
- DETECTABLE WARNING SURFACE
- COLD PLANE AC PAVEMENT
- TRIM LINE
- # CURB RAMP NUMBER

ABBREVIATIONS:

TBC	TOP BACK OF CURB
TRC	TOP OF RETAINING CURB
CPACP	COLD PLANE ASPHALT CONCRETE PAVEMENT
(E)	EXISTING

CURVE DATA

No. ⊕	R	Δ	T	L
1	22.5′	89°01′02″	22.12′	34.96′

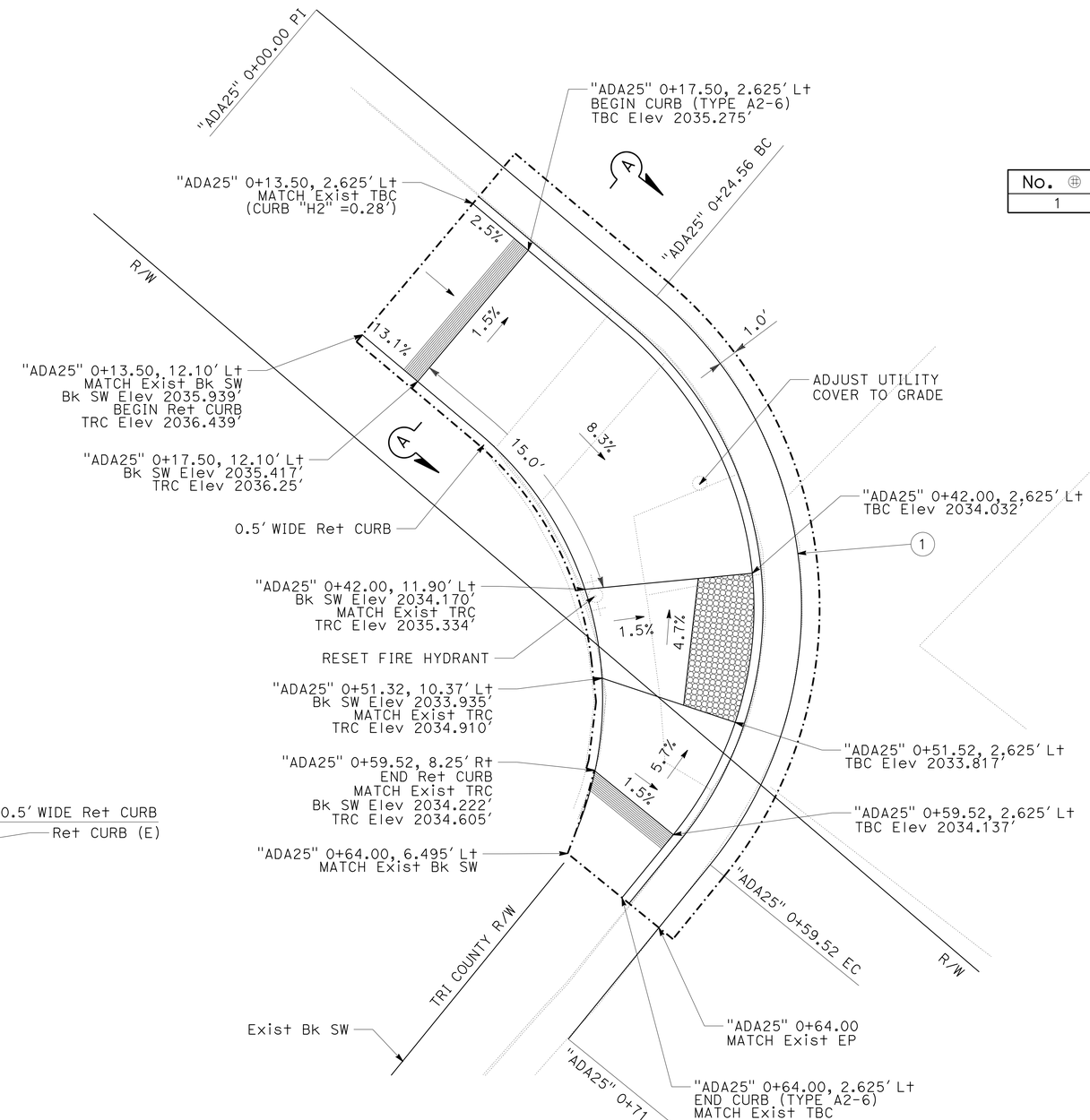

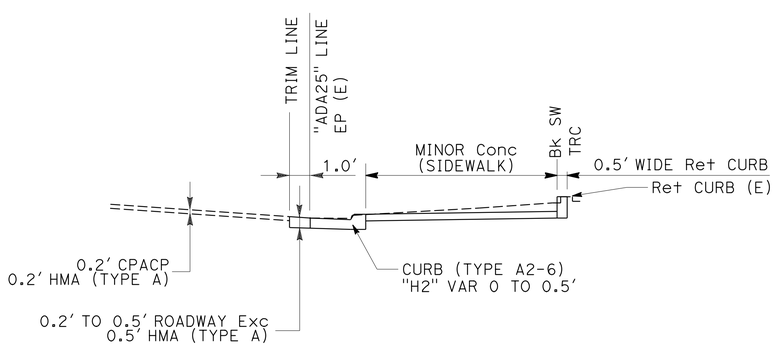

SECTION A-A
FOR DETAILS NOT SHOWN
SEE STD PLANS

CURB RAMP 25

PM 52.07
ROUTE 299 & WASHINGTON St

NOTE: NO WORK IS TO BE DONE BEYOND THE BACK OF EXISTING SIDEWALK

CONSTRUCTION DETAILS

NO SCALE

C-21

STATE OF CALIFORNIA - DEPARTMENT OF TRANSPORTATION
Caltrans DESIGN
FUNCTIONAL SUPERVISOR: JULIE CASEY
CALCULATED-DESIGNED BY: JEANNIE STEFFAN
CHECKED BY: HEIDI BORDERS
REVISED BY / DATE REVISED

P:\proj1\02\3E770_plans\pse\23e770ga021.dgn

LAST REVISION 11-25-14 | DATE PLOTTED => 15-JAN-2015 | TIME PLOTTED => 16:08

BORDER LAST REVISED 7/2/2010 | USERNAME => s123119 | DGN FILE => 23e770ga021.dgn | RELATIVE BORDER SCALE IS IN INCHES 0 1 2 3 | UNIT 0318 | PROJECT NUMBER & PHASE: 02-1500-0046-1 EA: 3E7711

Dist	COUNTY	ROUTE	POST MILES TOTAL PROJECT	SHEET No.	TOTAL SHEETS
02	Tri	299	36.9/53.5	26	165

Heidi Borders 11-25-14
REGISTERED CIVIL ENGINEER DATE

11-26-14
PLANS APPROVAL DATE

REGISTERED PROFESSIONAL ENGINEER HEIDI E. BORDERS No. C64194 Exp. 6-30-15 CIVIL STATE OF CALIFORNIA

THE STATE OF CALIFORNIA OR ITS OFFICERS OR AGENTS SHALL NOT BE RESPONSIBLE FOR THE ACCURACY OR COMPLETENESS OF SCANNED COPIES OF THIS PLAN SHEET.

NOTE:

1. FOR ACCURATE RIGHT OF WAY DATA, CONTACT RIGHT OF WAY ENGINEERING AT THE DISTRICT OFFICE.

LEGEND:

- CURB RAMP GROOVING
- DETECTABLE WARNING SURFACE
- COLD PLANE AC PAVEMENT
- TRIM LINE
- # CURB RAMP NUMBER

ABBREVIATIONS:

TBC	TOP BACK OF CURB
TRC	TOP OF RETAINING CURB
CPACP	COLD PLANE ASPHALT CONCRETE PAVEMENT
(E)	EXISTING

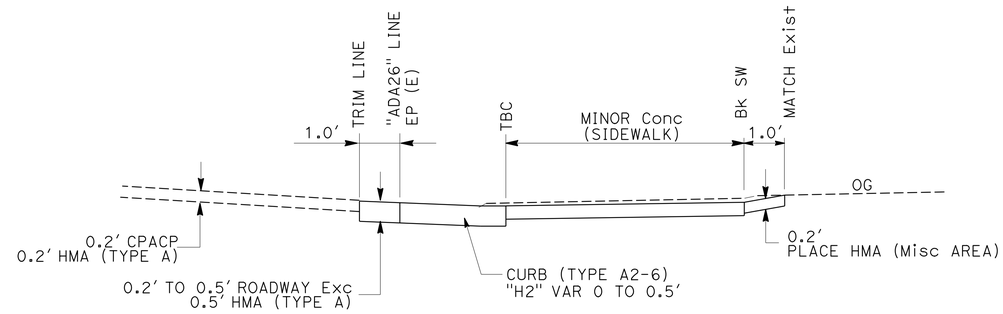

SECTION A-A
(Typ)

FOR DETAILS NOT SHOWN
SEE STD PLANS

CURVE DATA

No. ⊕	R	Δ	T	L
1	21.5'	92°10'10"	22.33'	34.59'

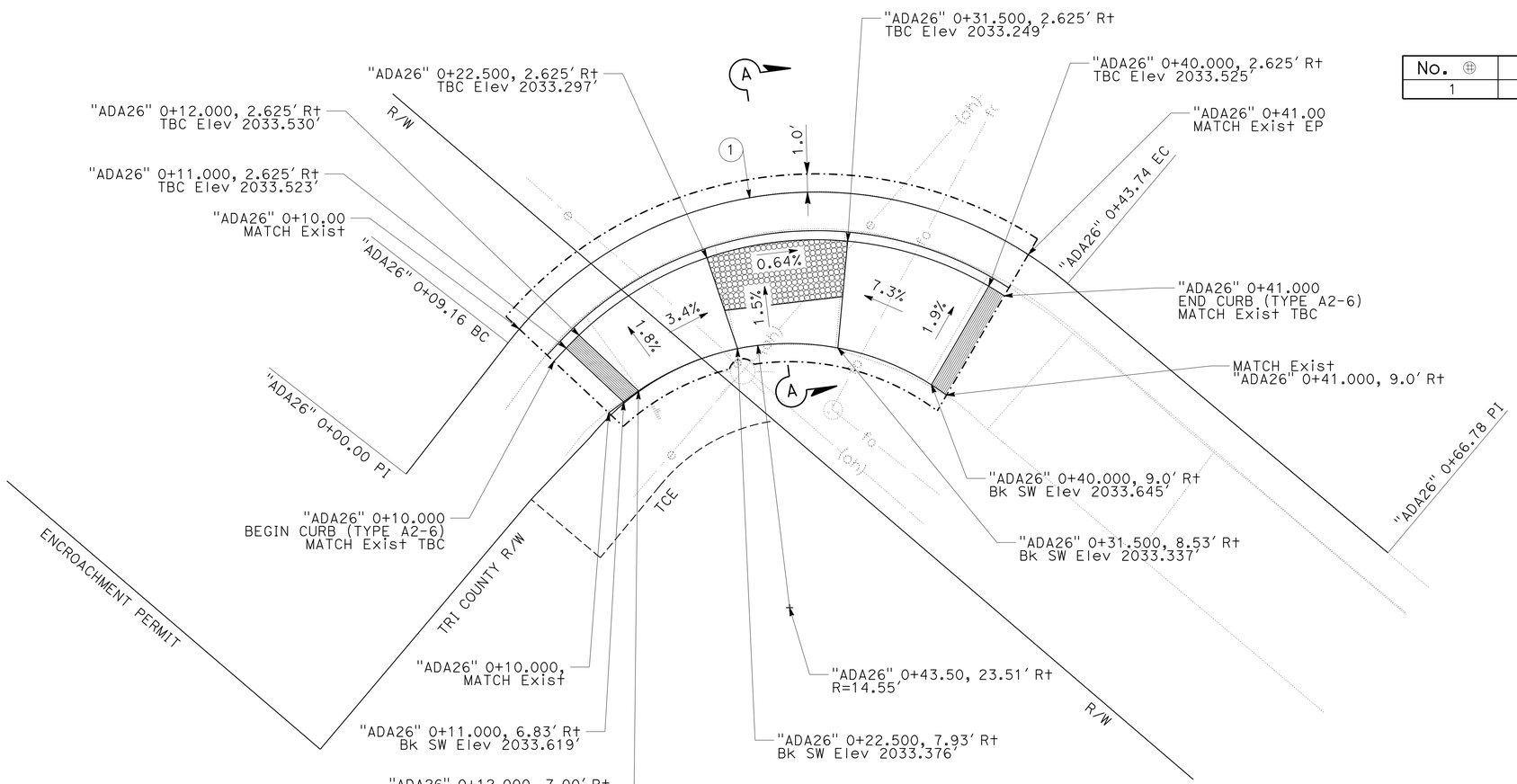

CURB RAMP 26

PM 52.07
ROUTE 299 & WASHINGTON St

CONSTRUCTION DETAILS

NO SCALE

C-22

REVISED BY	DATE REVISED

CALCULATED-DESIGNED BY: JEANNIE STEFFAN
CHECKED BY: HEIDI BORDERS
FUNCTIONAL SUPERVISOR: JULIE CASEY

STATE OF CALIFORNIA - DEPARTMENT OF TRANSPORTATION
Caltrans DESIGN

P:\proj1\02\3E770_plans\pse\23e770ga022.dgn

LAST REVISION 11-25-14 | DATE PLOTTED => 15-JAN-2015 | TIME PLOTTED => 16:08

Dist	COUNTY	ROUTE	POST MILES TOTAL PROJECT	SHEET No.	TOTAL SHEETS
02	Tri	299	36.9/53.5	27	165

Heidi Borders 11-25-14
REGISTERED CIVIL ENGINEER DATE

11-26-14
PLANS APPROVAL DATE

REGISTERED PROFESSIONAL ENGINEER HEIDI E. BORDERS No. C64194 Exp. 6-30-15 CIVIL STATE OF CALIFORNIA

THE STATE OF CALIFORNIA OR ITS OFFICERS OR AGENTS SHALL NOT BE RESPONSIBLE FOR THE ACCURACY OR COMPLETENESS OF SCANNED COPIES OF THIS PLAN SHEET.

NOTE:

1. FOR ACCURATE RIGHT OF WAY DATA, CONTACT RIGHT OF WAY ENGINEERING AT THE DISTRICT OFFICE.

LEGEND:

- CURB RAMP GROOVING
- DETECTABLE WARNING SURFACE
- COLD PLANE AC PAVEMENT
- TRIM LINE
- # CURB RAMP NUMBER
- HAND RAILING

ABBREVIATIONS:

TBC	TOP BACK OF CURB
TRC	TOP OF RETAINING CURB
CPACP	COLD PLANE ASPHALT CONCRETE PAVEMENT
(E)	EXISTING

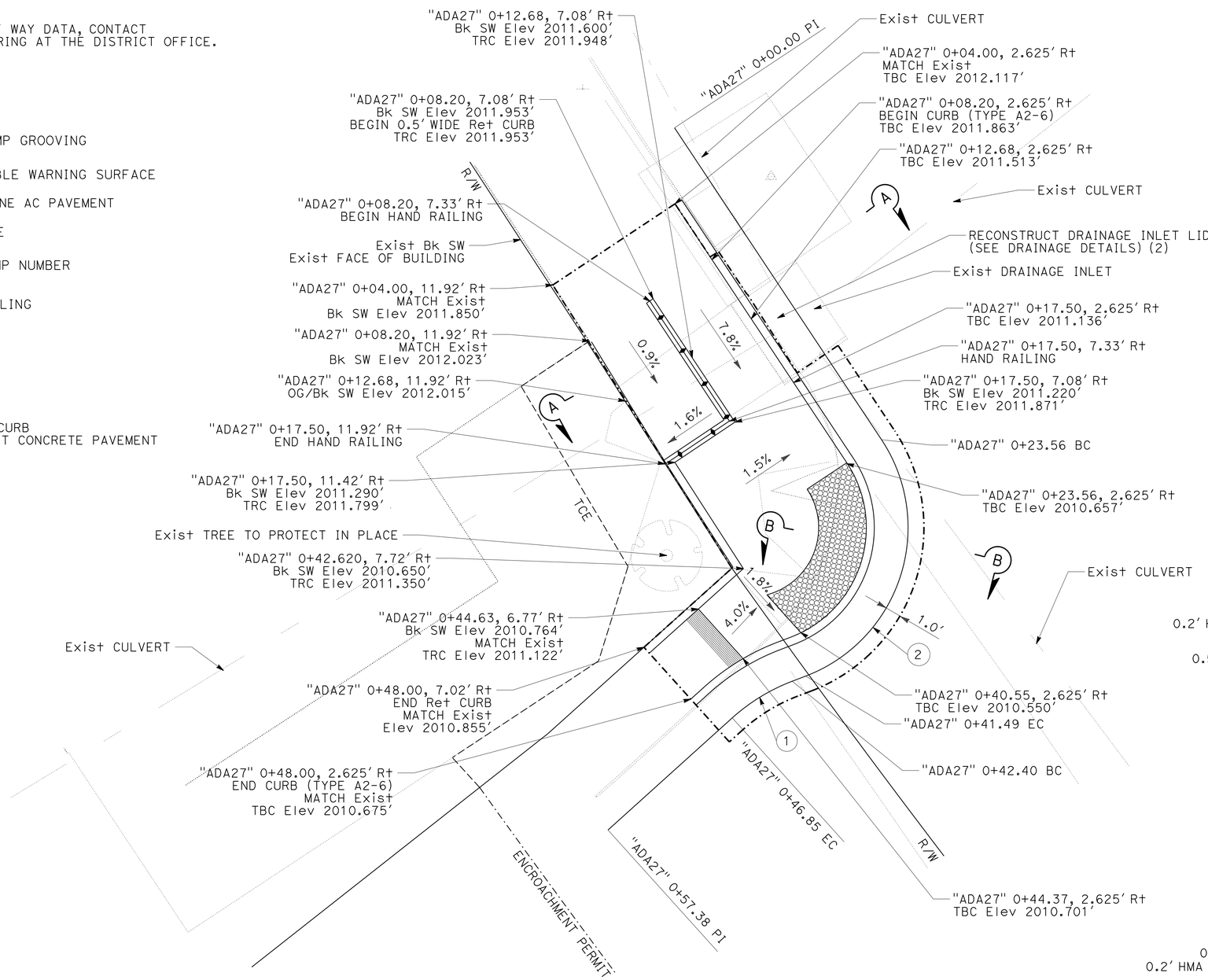

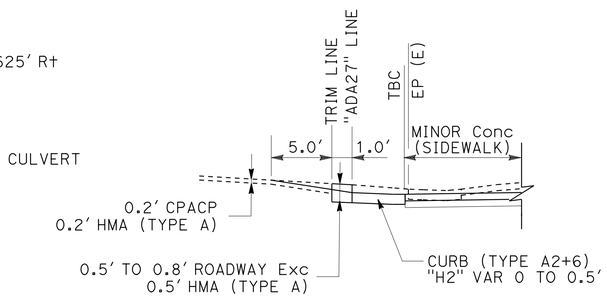

SECTION B-B
(Typ)

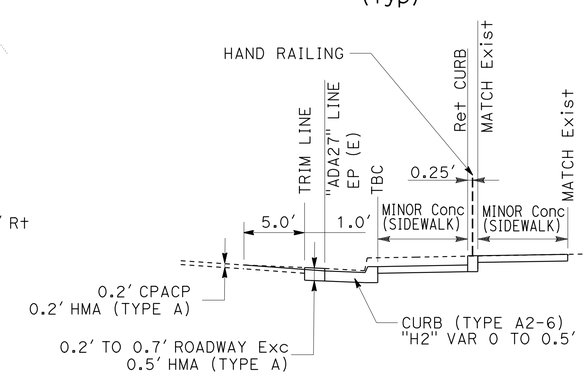

SECTION A-A
(Typ)

FOR DETAILS NOT SHOWN
SEE STD PLANS

CURVE DATA

No. ⊕	R	Δ	T	L
1	12.0'	21°13'51"	2.25'	4.45'
2	10.0'	102°45'12"	12.52'	17.93'

CURB RAMP 27

PM 51.83
ROUTE 299 & BREMER St

CONSTRUCTION DETAILS

NO SCALE

C-23

REVISED BY | DATE REVISED
JEANNIE STEFFAN | HEIDI BORDERS
CALCULATED-DESIGNED BY | CHECKED BY
FUNCTIONAL SUPERVISOR: JULIE CASEY

STATE OF CALIFORNIA - DEPARTMENT OF TRANSPORTATION
Caltrans
DESIGN

P:\proj\02\3E770_plans\pse\23e770ga023.dgn

LAST REVISION 11-25-14 | DATE PLOTTED => 15-JAN-2015 | TIME PLOTTED => 16:08

Dist	COUNTY	ROUTE	POST MILES TOTAL PROJECT	SHEET No.	TOTAL SHEETS
02	Tri	299	36.9/53.5	28	165

Heidi Borders 11-25-14
REGISTERED CIVIL ENGINEER DATE

11-26-14
PLANS APPROVAL DATE

REGISTERED PROFESSIONAL ENGINEER HEIDI E. BORDERS No. C64194 Exp. 6-30-15 CIVIL STATE OF CALIFORNIA

THE STATE OF CALIFORNIA OR ITS OFFICERS OR AGENTS SHALL NOT BE RESPONSIBLE FOR THE ACCURACY OR COMPLETENESS OF SCANNED COPIES OF THIS PLAN SHEET.

NOTE:

1. FOR ACCURATE RIGHT OF WAY DATA, CONTACT RIGHT OF WAY ENGINEERING AT THE DISTRICT OFFICE.

LEGEND:

- CURB RAMP GROOVING
- DETECTABLE WARNING SURFACE
- COLD PLANE AC PAVEMENT
- TRIM LINE
- # CURB RAMP NUMBER

ABBREVIATIONS:

TBC	TOP BACK OF CURB
TRC	TOP OF RETAINING CURB
CPACP	COLD PLANE ASPHALT CONCRETE PAVEMENT
(E)	EXISTING

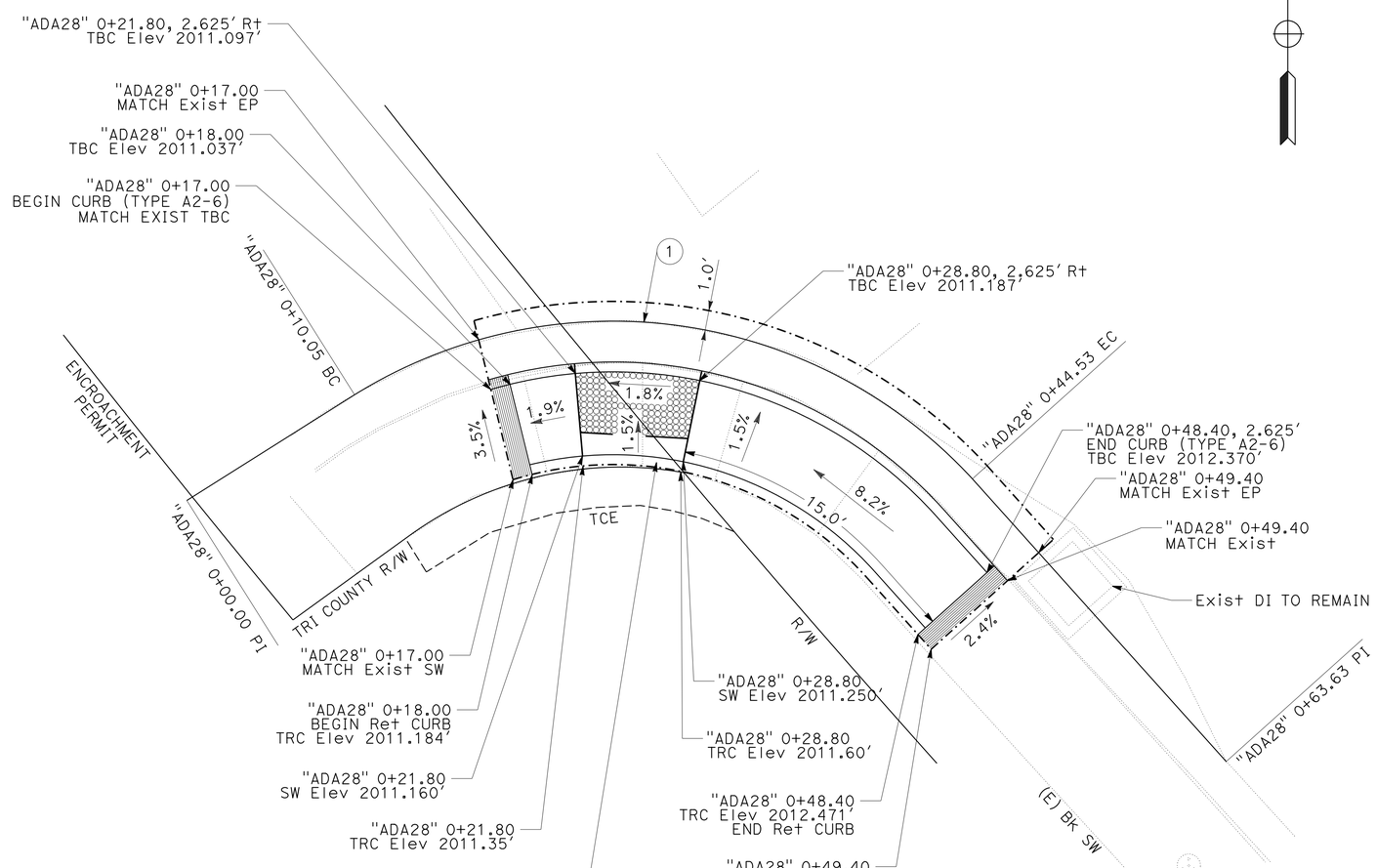

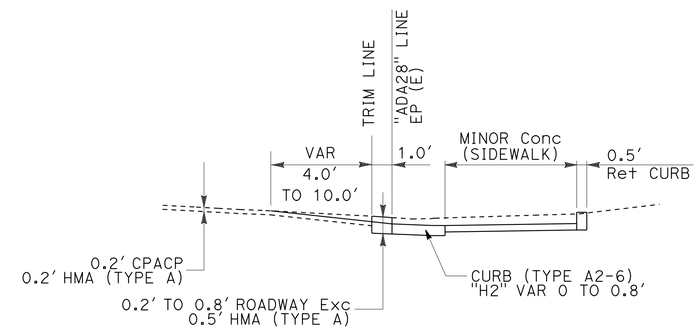

TYPICAL SECTION

NOTE: THERE IS A 5.0' TRANSITION FROM MATCH EXIST CURB TO CURB (TYPE A2-6)

FOR DETAILS NOT SHOWN SEE STD PLANS

CURVE DATA

No. (#)	R	Δ	T	L
7	24.8	79°11'47"	20.51	34.27

CURB RAMP 28

PM 51.83
ROUTE 299 & BREMER St

CONSTRUCTION DETAILS

NO SCALE

C-24

STATE OF CALIFORNIA - DEPARTMENT OF TRANSPORTATION
Caltrans DESIGN

FUNCTIONAL SUPERVISOR: JULIE CASEY
CALCULATED-DESIGNED BY: JEANNIE STEFFAN
CHECKED BY: HEIDI BORDERS
REVISED BY
DATE REVISED

P:\proj1\02\3E770_plans\pse\23e770ga024.dgn

LAST REVISION 11-25-14 | DATE PLOTTED => 15-JAN-2015 | TIME PLOTTED => 16:08

Dist	COUNTY	ROUTE	POST MILES TOTAL PROJECT	SHEET No.	TOTAL SHEETS
02	Tri	299	36.9/53.5	29	165

Heidi Borders 11-25-14
REGISTERED CIVIL ENGINEER DATE

11-26-14
PLANS APPROVAL DATE

REGISTERED PROFESSIONAL ENGINEER HEIDI E. BORDERS No. C64194 Exp. 6-30-15 CIVIL STATE OF CALIFORNIA

THE STATE OF CALIFORNIA OR ITS OFFICERS OR AGENTS SHALL NOT BE RESPONSIBLE FOR THE ACCURACY OR COMPLETENESS OF SCANNED COPIES OF THIS PLAN SHEET.

NOTE:

1. FOR ACCURATE RIGHT OF WAY DATA, CONTACT RIGHT OF WAY ENGINEERING AT THE DISTRICT OFFICE.

ABBREVIATIONS:

TBC	TOP BACK OF CURB
TRC	TOP OF RETAINING CURB
CPACP	COLD PLANE ASPHALT CONCRETE PAVEMENT
(E)	EXISTING

LEGEND:

- CURB RAMP GROOVING
- DETECTABLE WARNING SURFACE
- COLD PLANE AC PAVEMENT
- TRIM LINE
- # CURB RAMP NUMBER

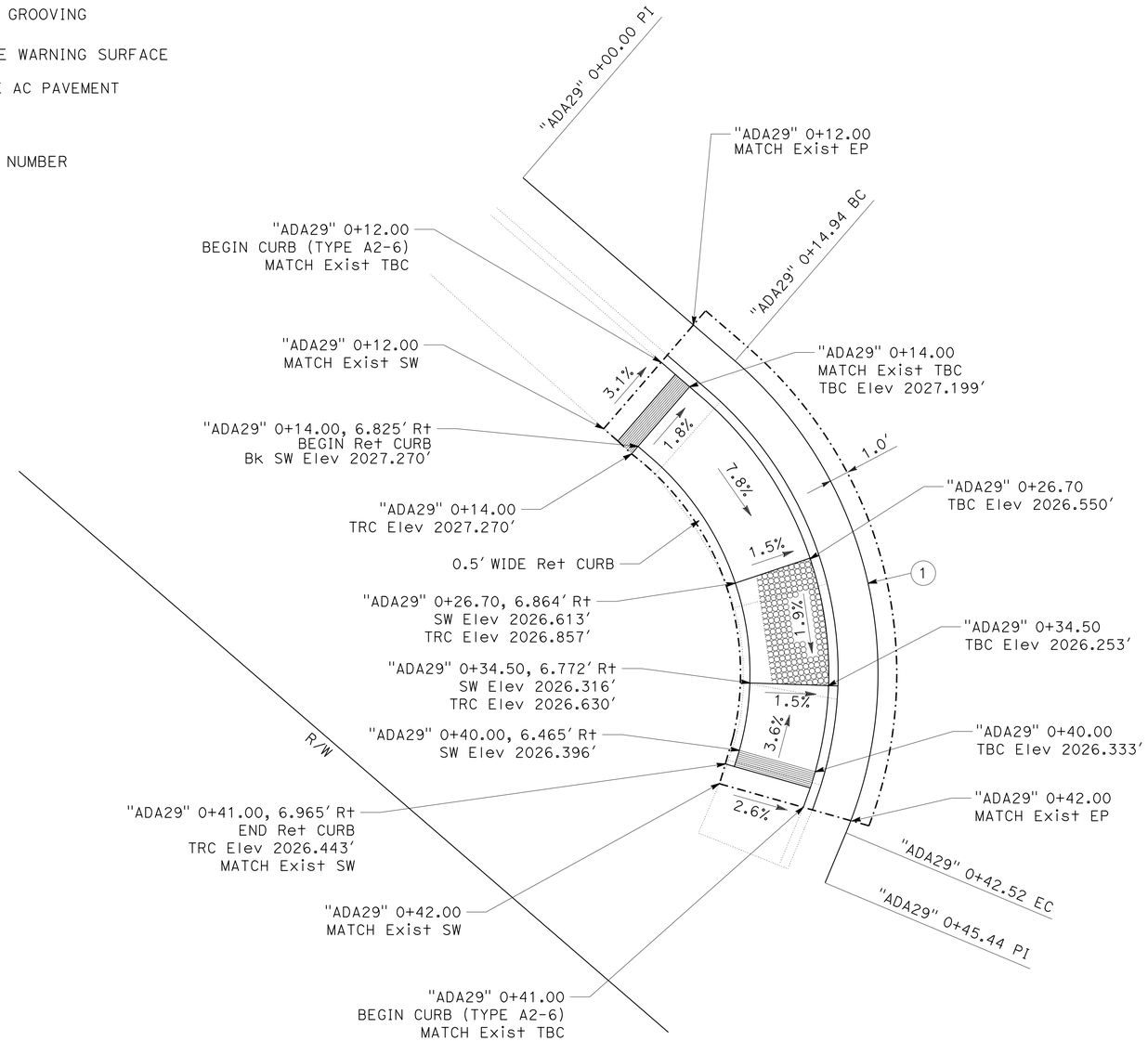

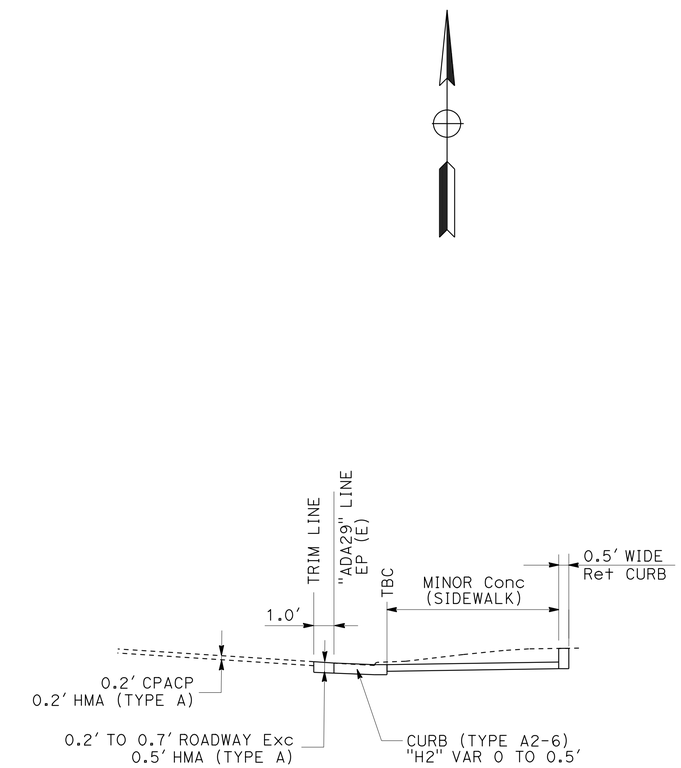

TYPICAL SECTION

FOR DETAILS NOT SHOWN
SEE STD PLANS

CURVE DATA

No. ⊕	R	Δ	T	L
2	22.0'	71°49'28"	15.93'	27.58'

CURB RAMP 29

PM 52.18
ROUTE 299 & MASONIC Ln

CONSTRUCTION DETAILS

NO SCALE

C-25

REVISED BY | DATE REVISED
JEANNIE STEFFAN | HEIDI BORDERS
CALCULATED-DESIGNED BY | CHECKED BY
FUNCTIONAL SUPERVISOR | JULIE CASEY

STATE OF CALIFORNIA - DEPARTMENT OF TRANSPORTATION
Caltrans® DESIGN

P:\proj1\02\3E770_plans\pse\23e770ga025.dgn

LAST REVISION 11-25-14 | DATE PLOTTED => 15-JAN-2015 | TIME PLOTTED => 16:08

Dist	COUNTY	ROUTE	POST MILES TOTAL PROJECT	SHEET No.	TOTAL SHEETS
02	Tri	299	36.9/53.5	30	165

Heidi Borders 11-25-14
REGISTERED CIVIL ENGINEER DATE

11-26-14
PLANS APPROVAL DATE

REGISTERED PROFESSIONAL ENGINEER HEIDI E. BORDERS No. C64194 Exp. 6-30-15 CIVIL STATE OF CALIFORNIA

THE STATE OF CALIFORNIA OR ITS OFFICERS OR AGENTS SHALL NOT BE RESPONSIBLE FOR THE ACCURACY OR COMPLETENESS OF SCANNED COPIES OF THIS PLAN SHEET.

NOTE:

1. FOR ACCURATE RIGHT OF WAY DATA, CONTACT RIGHT OF WAY ENGINEERING AT THE DISTRICT OFFICE.

LEGEND:

- CURB RAMP GROOVING
- DETECTABLE WARNING SURFACE
- COLD PLANE AC PAVEMENT
- TRIM LINE
- # CURB RAMP NUMBER

ABBREVIATIONS:

TBC	TOP BACK OF CURB
TRC	TOP OF RETAINING CURB
CPACP	COLD PLANE ASPHALT CONCRETE PAVEMENT
(E)	EXISTING

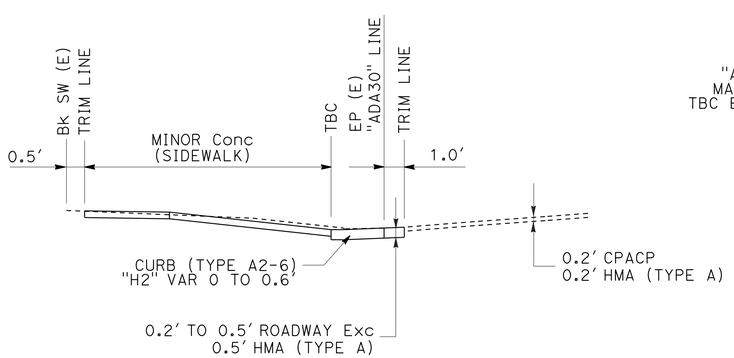

TYPICAL SECTION

NOTE: THERE IS A 5.0' TRANSITION FROM MATCH EXIST CURB TO CURB (TYPE A2-6)

FOR DETAILS NOT SHOWN SEE STD PLANS

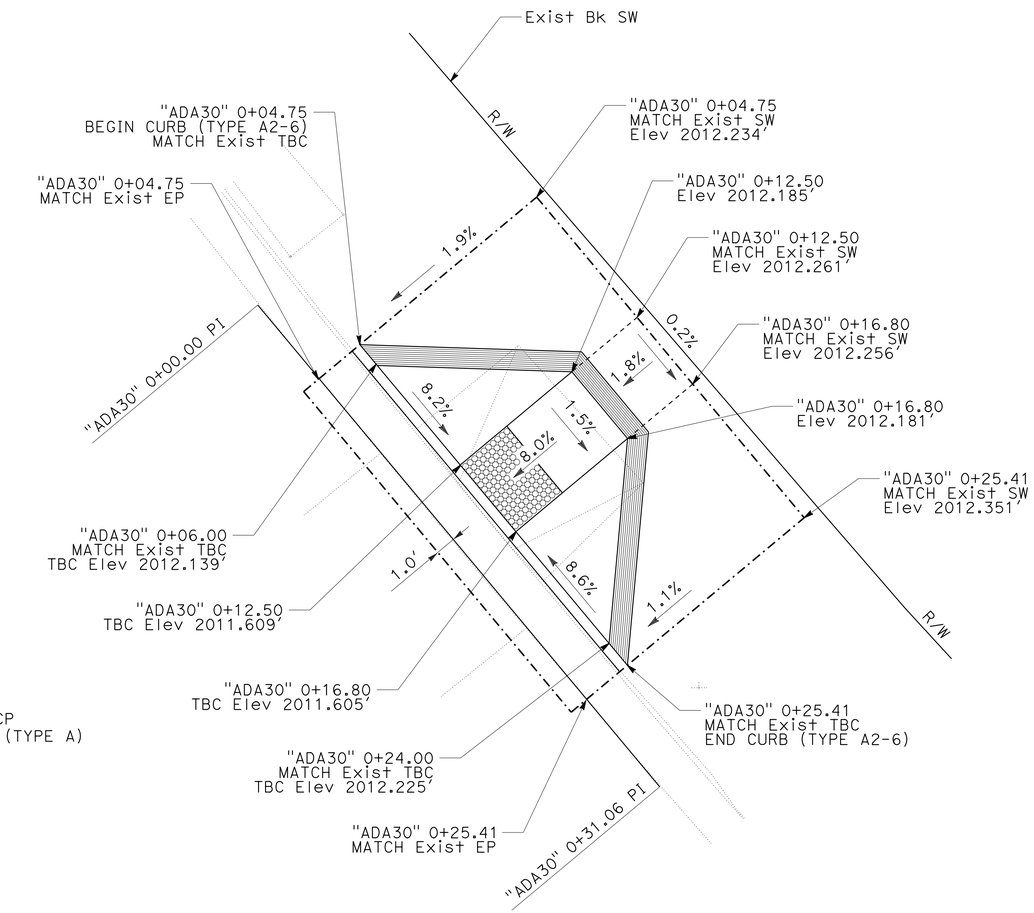

CURB RAMP 30

PM 51.83
ROUTE 299 & BREMER St

NOTE: TRIMLINE SHALL MAINTAIN A MINIMUM DISTANCE OF 6" FROM EXIST FACE OF BUILDING

CONSTRUCTION DETAILS

NO SCALE

C-26

STATE OF CALIFORNIA - DEPARTMENT OF TRANSPORTATION
Caltrans
DESIGN

FUNCTIONAL SUPERVISOR: JULIE CASEY
CALCULATED-DESIGNED BY: JEANNIE STEFFAN
CHECKED BY: HEIDI BORDERS
REVISED BY
DATE REVISED

P:\proj1\02\3E770_plans\pse\23e770ga026.dgn

LAST REVISION 11-25-14 | DATE PLOTTED => 15-JAN-2015 | TIME PLOTTED => 16:08

Dist	COUNTY	ROUTE	POST MILES TOTAL PROJECT	SHEET No.	TOTAL SHEETS
02	Tri	299	36.9/53.5	31	165

Heidi Borders 11-25-14
REGISTERED CIVIL ENGINEER DATE

11-26-14
PLANS APPROVAL DATE

REGISTERED PROFESSIONAL ENGINEER HEIDI E. BORDERS No. C64194 Exp. 6-30-15 CIVIL STATE OF CALIFORNIA

THE STATE OF CALIFORNIA OR ITS OFFICERS OR AGENTS SHALL NOT BE RESPONSIBLE FOR THE ACCURACY OR COMPLETENESS OF SCANNED COPIES OF THIS PLAN SHEET.

NOTE:

1. FOR ACCURATE RIGHT OF WAY DATA, CONTACT RIGHT OF WAY ENGINEERING AT THE DISTRICT OFFICE.

LEGEND:

- CURB RAMP GROOVING
- DETECTABLE WARNING SURFACE
- COLD PLANE AC PAVEMENT
- TRIM LINE
- # CURB RAMP NUMBER

ABBREVIATIONS:

TBC	TOP BACK OF CURB
TRC	TOP OF RETAINING CURB
CPACP	COLD PLANE ASPHALT CONCRETE PAVEMENT
(E)	EXISTING

CURVE DATA

No. ⊕	R	Δ	T	L
1	27.0′	75°21′54″	20.85′	35.51′

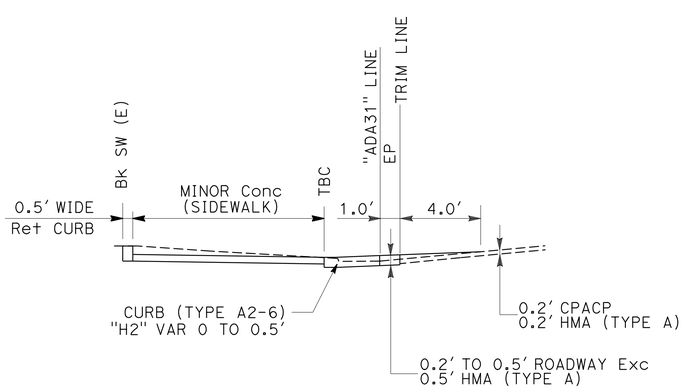

TYPICAL SECTION

FOR DETAILS NOT SHOWN
SEE STD PLANS

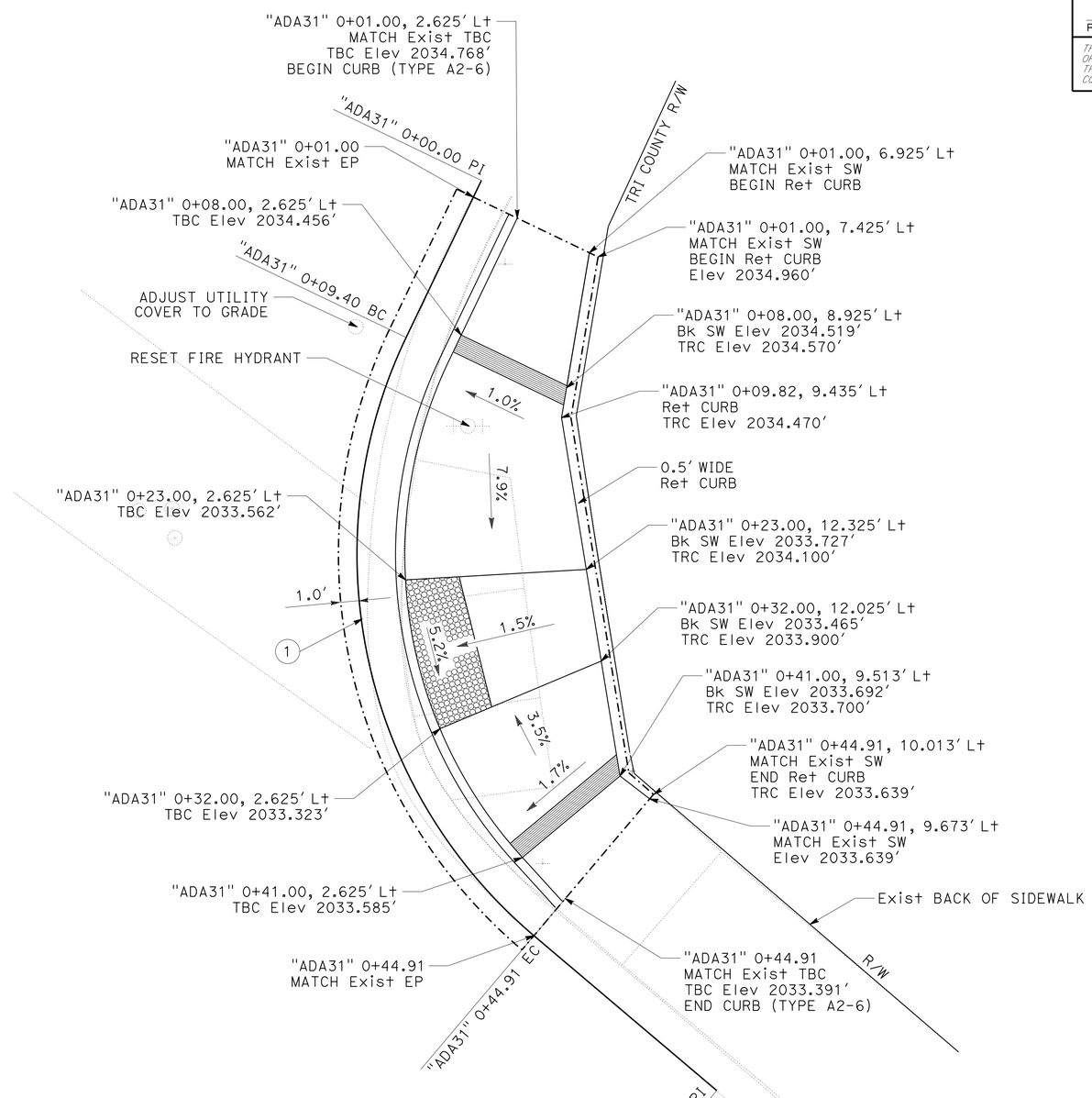

CURB RAMP 31

PM 52.07
ROUTE 299 & WASHINGTON St

NOTE: NO WORK IS TO BE DONE BEYOND THE BACK OF EXISTING SIDEWALK

CONSTRUCTION DETAILS

NO SCALE

C-27

STATE OF CALIFORNIA - DEPARTMENT OF TRANSPORTATION
Caltrans DESIGN
FUNCTIONAL SUPERVISOR: JULIE CASEY
CALCULATED-DESIGNED BY: JEANNIE STEFFAN
CHECKED BY: HEIDI BORDERS
REVISED BY / DATE REVISED

P:\proj1\02\3E770_plans\pse\23e770ga027.dgn

LAST REVISION 11-25-14 | DATE PLOTTED => 15-JAN-2015 | TIME PLOTTED => 16:08

Dist	COUNTY	ROUTE	POST MILES TOTAL PROJECT	SHEET No.	TOTAL SHEETS
02	Tri	299	36.9/53.5	32	165

Heidi Borders 11-25-14
REGISTERED CIVIL ENGINEER DATE

11-26-14
PLANS APPROVAL DATE

REGISTERED PROFESSIONAL ENGINEER HEIDI E. BORDERS No. C64194 Exp. 6-30-15 CIVIL STATE OF CALIFORNIA

THE STATE OF CALIFORNIA OR ITS OFFICERS OR AGENTS SHALL NOT BE RESPONSIBLE FOR THE ACCURACY OR COMPLETENESS OF SCANNED COPIES OF THIS PLAN SHEET.

NOTE:

1. FOR ACCURATE RIGHT OF WAY DATA, CONTACT RIGHT OF WAY ENGINEERING AT THE DISTRICT OFFICE.

LEGEND:

- CURB RAMP GROOVING
- DETECTABLE WARNING SURFACE
- COLD PLANE AC PAVEMENT
- TRIM LINE
- # CURB RAMP NUMBER

ABBREVIATIONS:

TBC	TOP BACK OF CURB
TRC	TOP OF RETAINING CURB
CPACP	COLD PLANE ASPHALT CONCRETE PAVEMENT
(E)	EXISTING

CURVE DATA

No. ⊕	R	Δ	T	L
1	14.5′	86°37′22″	13.67′	21.92′

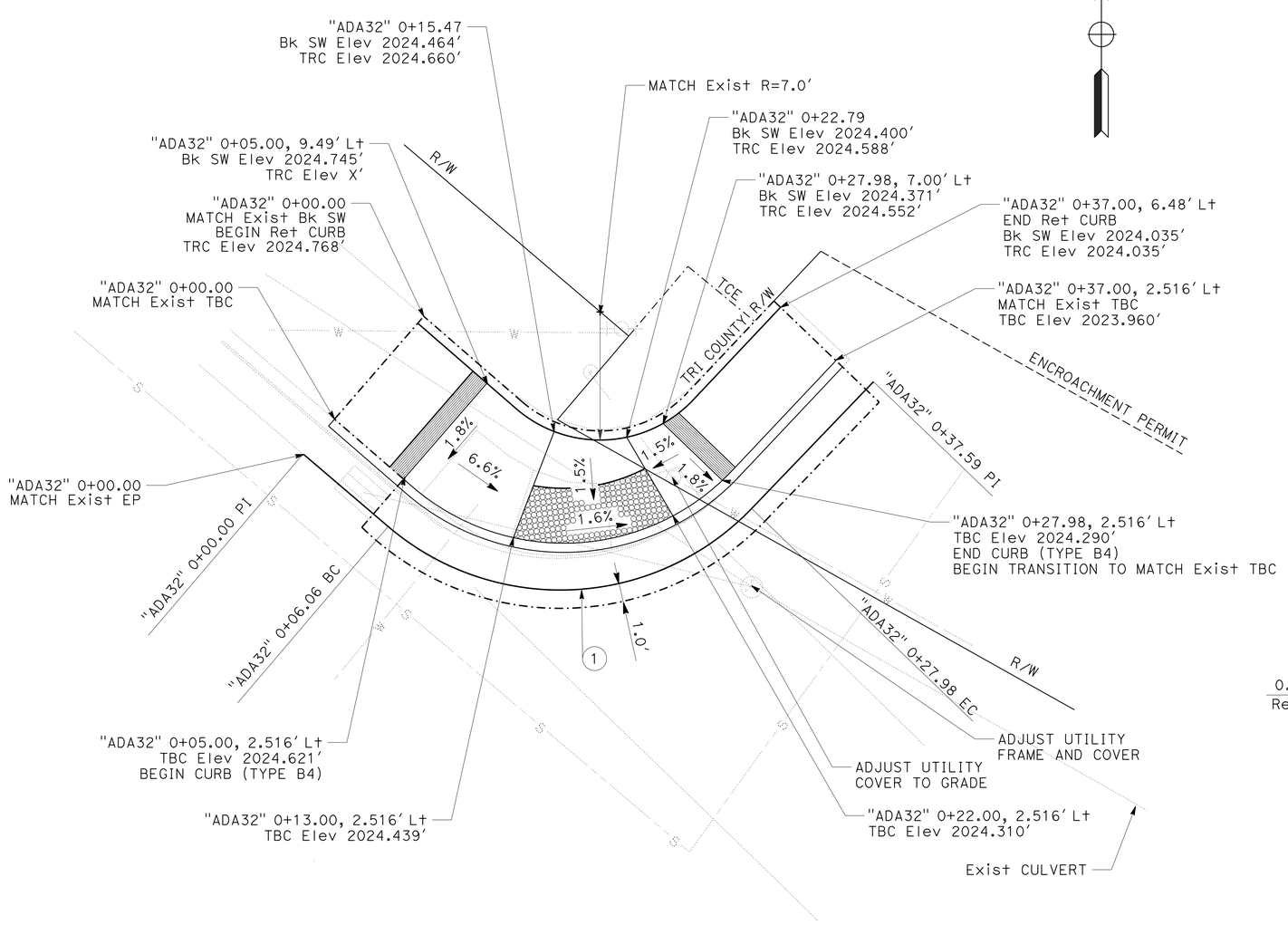

CURB RAMP 32

PM 52.12
ROUTE 299 & WEAVER St

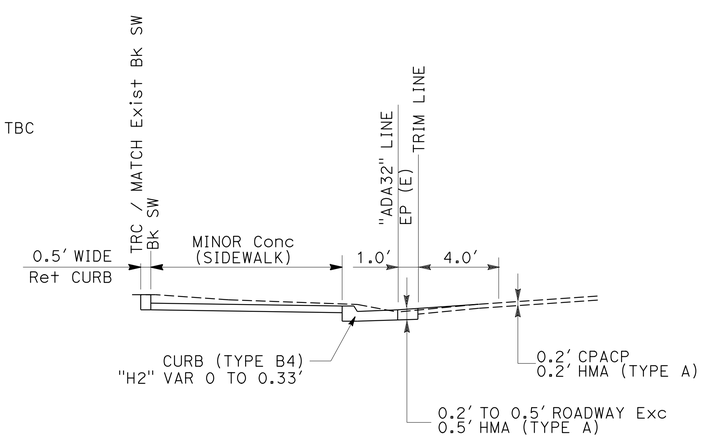

SECTION A-A

NOTE: THERE IS A 5.0′ TRANSITION FROM MATCH EXIST CURB TO CURB (TYPE A2-6)

FOR DETAILS NOT SHOWN SEE STD PLANS

CONSTRUCTION DETAILS

NO SCALE

C-28

REVISED BY	DATE REVISED
JEANNIE STEFFAN	HEIDI BORDERS
CALCULATED-DESIGNED BY	CHECKED BY
FUNCTIONAL SUPERVISOR	JULIE CASEY

STATE OF CALIFORNIA - DEPARTMENT OF TRANSPORTATION
Caltrans
DESIGN

P:\proj1\02\3E770_plans\pse\23e770ga028.dgn

LAST REVISION 11-25-14 | DATE PLOTTED => 15-JAN-2015 | TIME PLOTTED => 16:08

Dist	COUNTY	ROUTE	POST MILES TOTAL PROJECT	SHEET No.	TOTAL SHEETS
02	Tri	299	36.9/53.5	33	165

Heidi Borders 11-25-14
REGISTERED CIVIL ENGINEER DATE

11-26-14
PLANS APPROVAL DATE

REGISTERED PROFESSIONAL ENGINEER HEIDI E. BORDERS No. C64194 Exp. 6-30-15 CIVIL STATE OF CALIFORNIA

THE STATE OF CALIFORNIA OR ITS OFFICERS OR AGENTS SHALL NOT BE RESPONSIBLE FOR THE ACCURACY OR COMPLETENESS OF SCANNED COPIES OF THIS PLAN SHEET.

NOTE:

1. FOR ACCURATE RIGHT OF WAY DATA, CONTACT RIGHT OF WAY ENGINEERING AT THE DISTRICT OFFICE.

LEGEND:

- CURB RAMP GROOVING
- DETECTABLE WARNING SURFACE
- COLD PLANE AC PAVEMENT
- TRIM LINE
- # CURB RAMP NUMBER

ABBREVIATIONS:

TBC	TOP BACK OF CURB
TRC	TOP OF RETAINING CURB
CPACP	COLD PLANE ASPHALT CONCRETE PAVEMENT
(E)	EXISTING

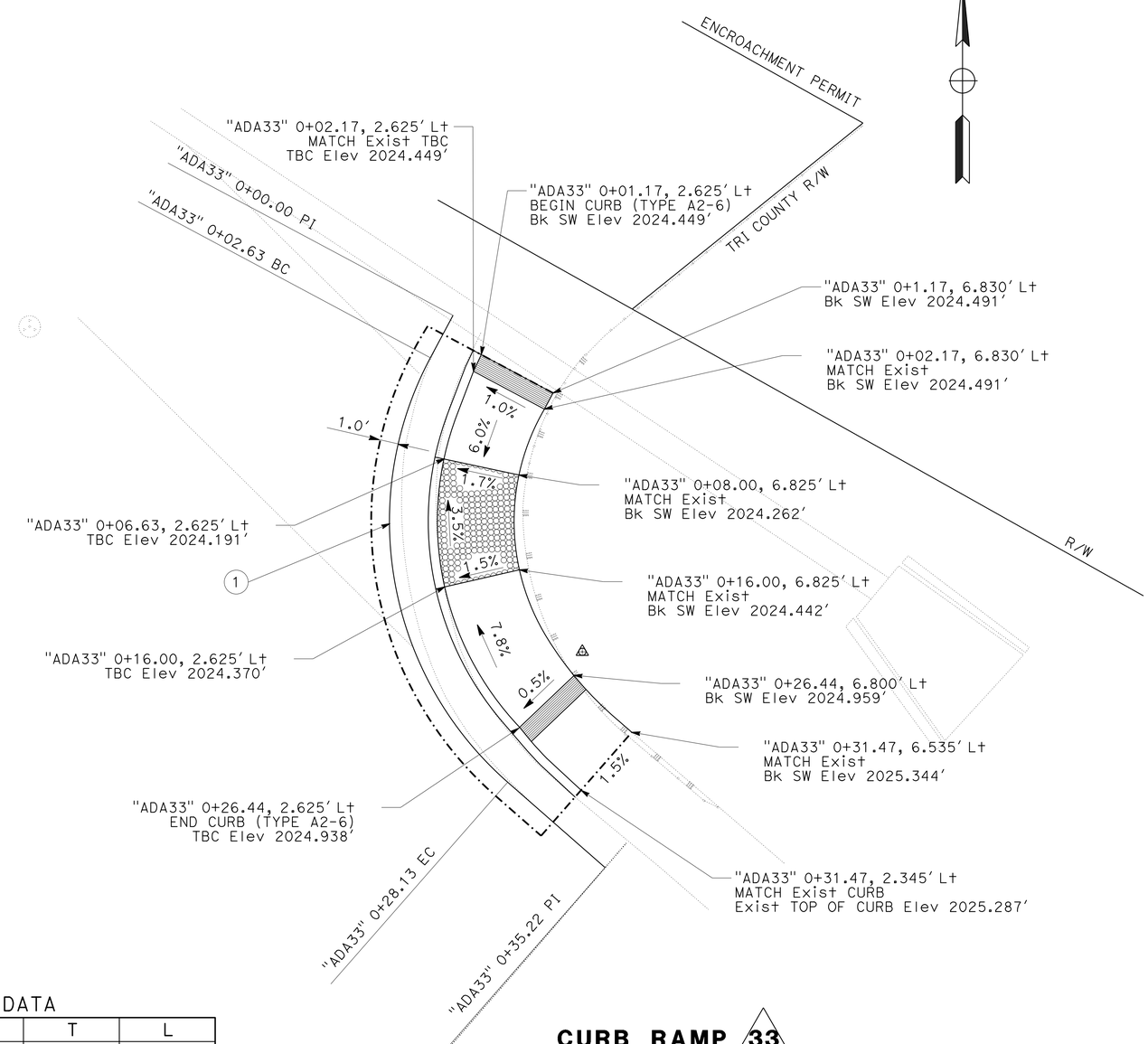

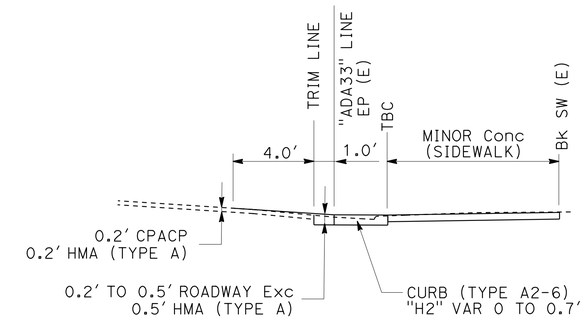

TYPICAL SECTION

NOTE: THERE IS A 5.0' TRANSITION FROM MATCH EXIST CURB TO CURB (TYPE A2-6)

FOR DETAILS NOT SHOWN SEE STD PLANS

CURVE DATA

No. ⊕	R	Δ	T	L
1	19.0'	76°52'49"	15.08'	25.49'

CURB RAMP 33

PM 52.12
ROUTE 299 & WEAVER St

CONSTRUCTION DETAILS

NO SCALE

C-29

REVISED BY	DATE REVISED
JEANNIE STEFFAN	HEIDI BORDERS
CALCULATED-DESIGNED BY	CHECKED BY
FUNCTIONAL SUPERVISOR	JULIE CASEY

STATE OF CALIFORNIA - DEPARTMENT OF TRANSPORTATION
Caltrans DESIGN

P:\proj1\02\3E770_plans\pse\23e770ga029.dgn

LAST REVISION 11-25-14 | DATE PLOTTED => 15-JAN-2015 | TIME PLOTTED => 16:08

Dist	COUNTY	ROUTE	POST MILES TOTAL PROJECT	SHEET No.	TOTAL SHEETS
02	Tri	299	36.9/53.5	34	165

Heidi Borders 11-25-14
REGISTERED CIVIL ENGINEER DATE

11-26-14
PLANS APPROVAL DATE

REGISTERED PROFESSIONAL ENGINEER HEIDI E. BORDERS No. C64194 Exp. 6-30-15 CIVIL STATE OF CALIFORNIA

THE STATE OF CALIFORNIA OR ITS OFFICERS OR AGENTS SHALL NOT BE RESPONSIBLE FOR THE ACCURACY OR COMPLETENESS OF SCANNED COPIES OF THIS PLAN SHEET.

NOTE:

1. FOR ACCURATE RIGHT OF WAY DATA, CONTACT RIGHT OF WAY ENGINEERING AT THE DISTRICT OFFICE.

ABBREVIATIONS:

TBC	TOP BACK OF CURB
TRC	TOP OF RETAINING CURB
CPACP	COLD PLANE ASPHALT CONCRETE PAVEMENT
(E)	EXISTING

LEGEND:

- CURB RAMP GROOVING
- DETECTABLE WARNING SURFACE
- COLD PLANE AC PAVEMENT
- AREA TO REMAIN UNPAVED
- TRIM LINE
- CURB RAMP NUMBER
- HAND RAILING

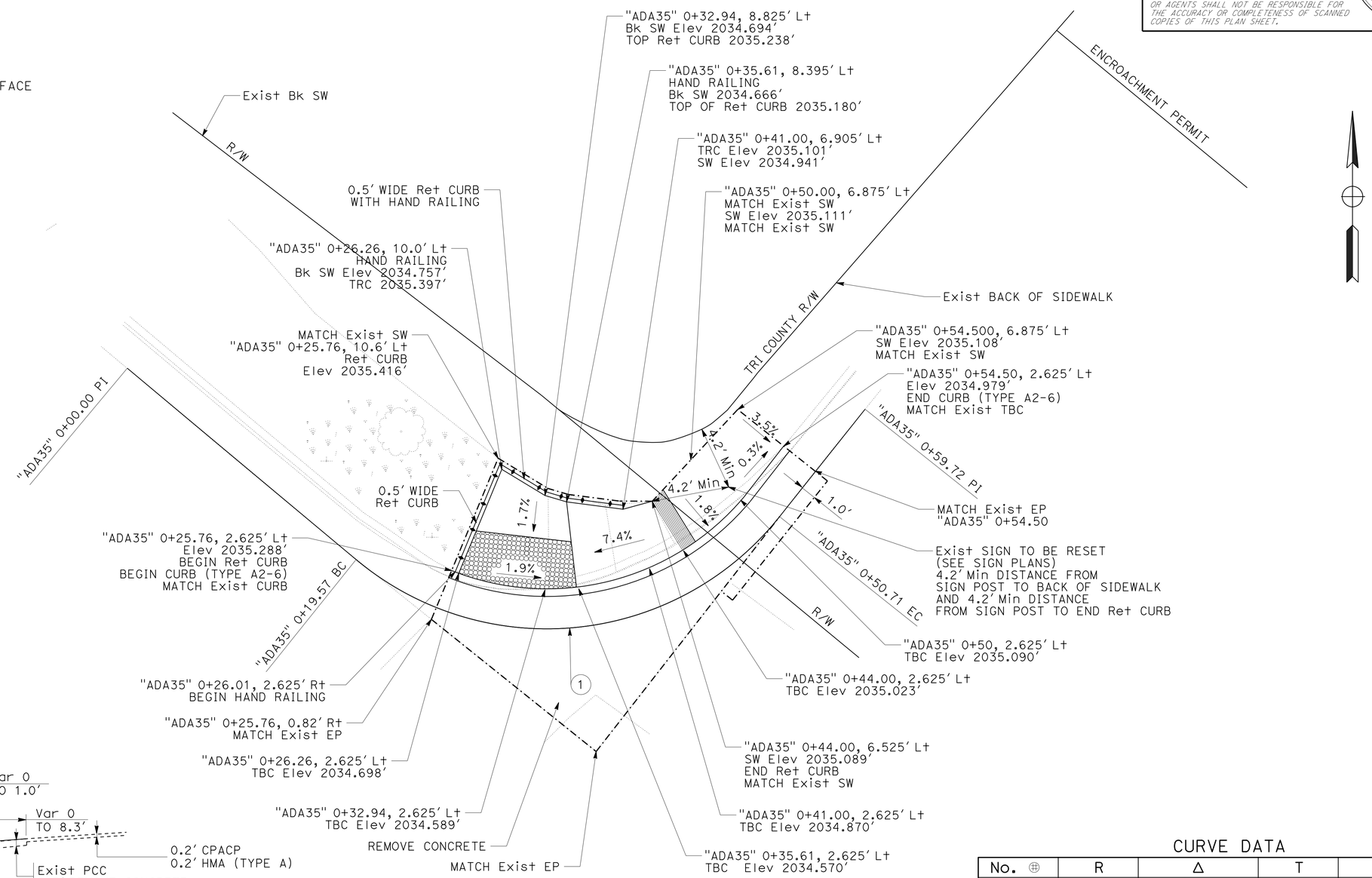

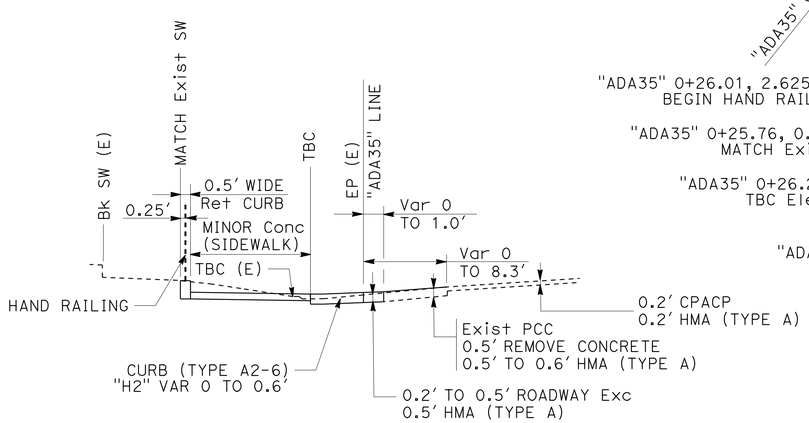

TYPICAL SECTION

NOTE: THERE IS A 5.0' TRANSITION FROM MATCH EXIST CURB TO CURB (TYPE A2-6)

FOR DETAILS NOT SHOWN SEE STD PLANS

CURB RAMP 35

PM 52.07
ROUTE 299 & WASHINGTON St

NOTE: TRIMLINE SHALL MAINTAIN A MINIMUM DISTANCE OF 6" FROM EXIST BUILDING

CURVE DATA

No. ⊕	R	Δ	T	L
1	19.5'	91°22'45"	20.00'	31.13'

CONSTRUCTION DETAILS

NO SCALE

C-30

REVISED BY | DATE REVISED
JEANNIE STEFFAN | HEIDI BORDERS
CALCULATED-DESIGNED BY | CHECKED BY
FUNCTIONAL SUPERVISOR
JULIE CASEY

STATE OF CALIFORNIA - DEPARTMENT OF TRANSPORTATION
Caltrans
DESIGN

P:\proj1\02\3E770_plans\pse\23e770ga030.dgn

LAST REVISION 11-25-14 | DATE PLOTTED => 15-JAN-2015 | TIME PLOTTED => 16:08

Dist	COUNTY	ROUTE	POST MILES TOTAL PROJECT	SHEET No.	TOTAL SHEETS
02	Tri	299	36.9/53.5	35	165

Heidi Borders 11-25-14
REGISTERED CIVIL ENGINEER DATE

11-26-14
PLANS APPROVAL DATE

REGISTERED PROFESSIONAL ENGINEER HEIDI E. BORDERS No. C64194 Exp. 6-30-15 CIVIL STATE OF CALIFORNIA

THE STATE OF CALIFORNIA OR ITS OFFICERS OR AGENTS SHALL NOT BE RESPONSIBLE FOR THE ACCURACY OR COMPLETENESS OF SCANNED COPIES OF THIS PLAN SHEET.

NOTES:

1. FOR ACCURATE RIGHT OF WAY DATA, CONTACT RIGHT OF WAY ENGINEERING AT THE DISTRICT OFFICE.
2. EXISTING UTILITIES SHOWN HAVE NOT BEEN POSITIVELY LOCATED.

ABBREVIATIONS:

TBC	TOP BACK OF CURB
TRC	TOP OF RETAINING CURB
CPACP	COLD PLANE ASPHALT CONCRETE PAVEMENT
(E)	EXISTING

LEGEND:

- CURB RAMP GROOVING
- DETECTABLE WARNING SURFACE
- COLD PLANE AC PAVEMENT
- TRIM LINE
- # CURB RAMP NUMBER
- PH# POTHOLE LOCATION

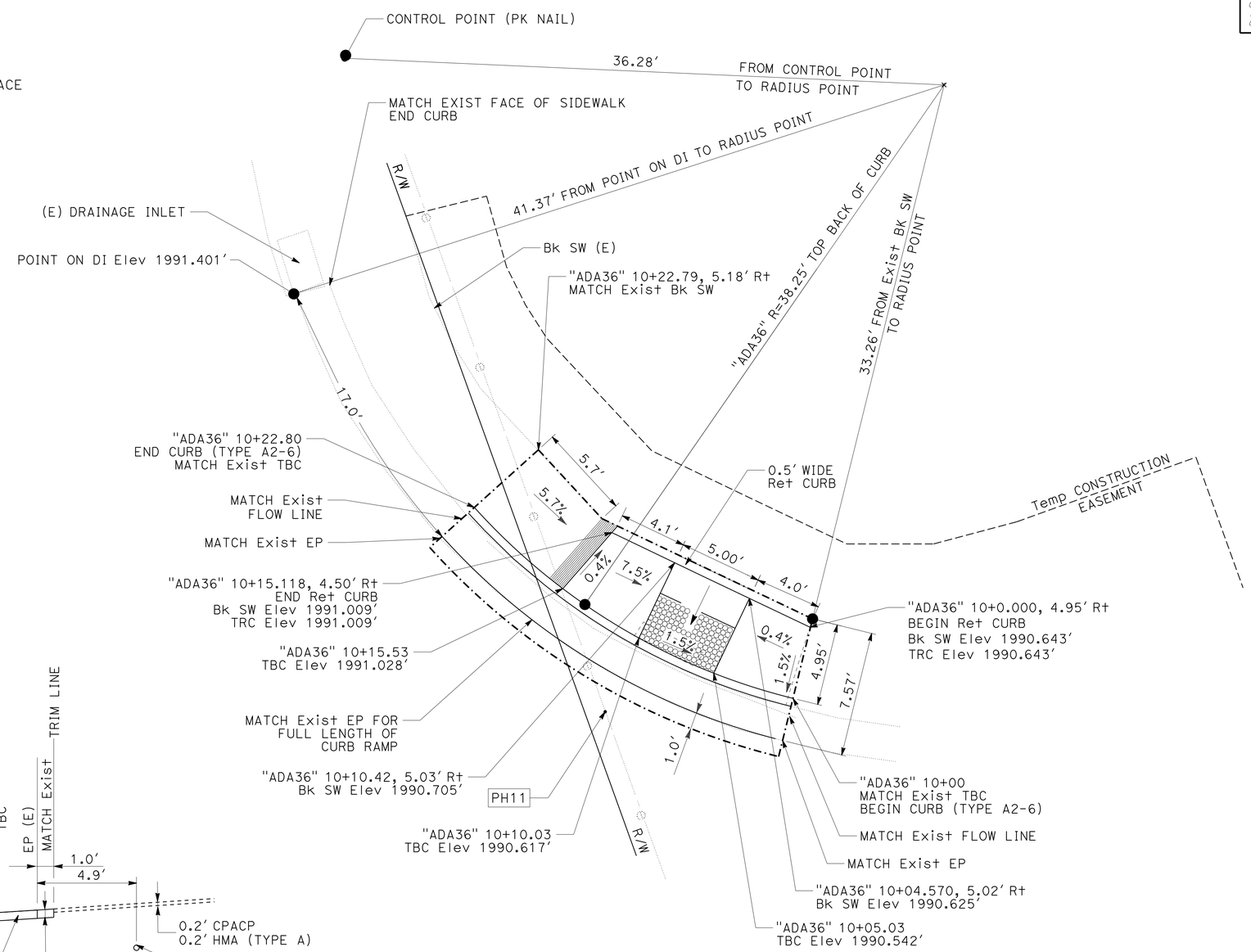

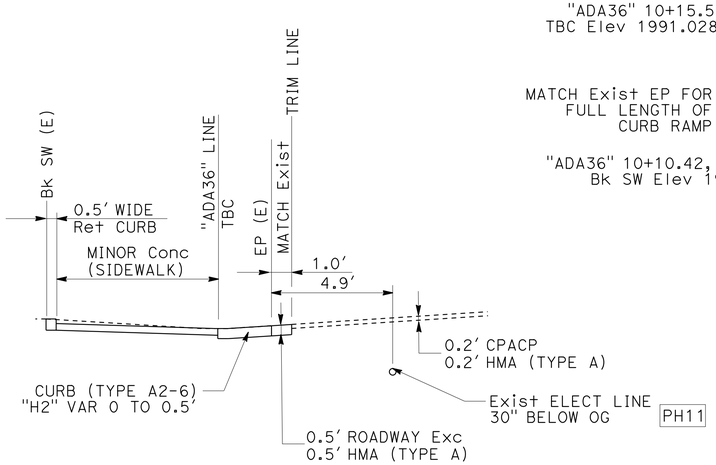

TYPICAL SECTION

FOR DETAILS NOT SHOWN SEE STD PLANS

CURB RAMP 36

PM 52.629
ROUTE 299 & TRINITY PLAZA

CONSTRUCTION DETAILS

NO SCALE

C-31

REVISED BY	DATE REVISED

CALCULATED-DESIGNED BY: JEANNIE STEFFAN
CHECKED BY: HEIDI BORDERS
FUNCTIONAL SUPERVISOR: JULIE CASEY

STATE OF CALIFORNIA - DEPARTMENT OF TRANSPORTATION
Caltrans
DESIGN

P:\proj\02\3E770_plans\pse\23e770ga031.dgn

LAST REVISION 11-25-14 | DATE PLOTTED => 15-JAN-2015 | TIME PLOTTED => 16:08

Dist	COUNTY	ROUTE	POST MILES TOTAL PROJECT	SHEET No.	TOTAL SHEETS
02	Tri	299	36.9/53.5	36	165

Heidi Borders 11-25-14
REGISTERED CIVIL ENGINEER DATE

11-26-14
PLANS APPROVAL DATE

REGISTERED PROFESSIONAL ENGINEER
HEIDI E. BORDERS
No. C64194
Exp. 6-30-15
CIVIL
STATE OF CALIFORNIA

THE STATE OF CALIFORNIA OR ITS OFFICERS OR AGENTS SHALL NOT BE RESPONSIBLE FOR THE ACCURACY OR COMPLETENESS OF SCANNED COPIES OF THIS PLAN SHEET.

NOTES:

1. FOR ACCURATE RIGHT OF WAY DATA, CONTACT RIGHT OF WAY ENGINEERING AT THE DISTRICT OFFICE.
2. EXISTING UTILITIES SHOWN HAVE NOT BEEN POSITIVELY LOCATED.

LEGEND:

- CURB RAMP GROOVING
- DETECTABLE WARNING SURFACE
- COLD PLANE AC PAVEMENT
- TRIM LINE
- # CURB RAMP NUMBER
- PH# POTHOLE LOCATION

ABBREVIATIONS:

TBC	TOP BACK OF CURB
TRC	TOP OF RETAINING CURB
CPACP	COLD PLANE ASPHALT CONCRETE PAVEMENT
(E)	EXISTING

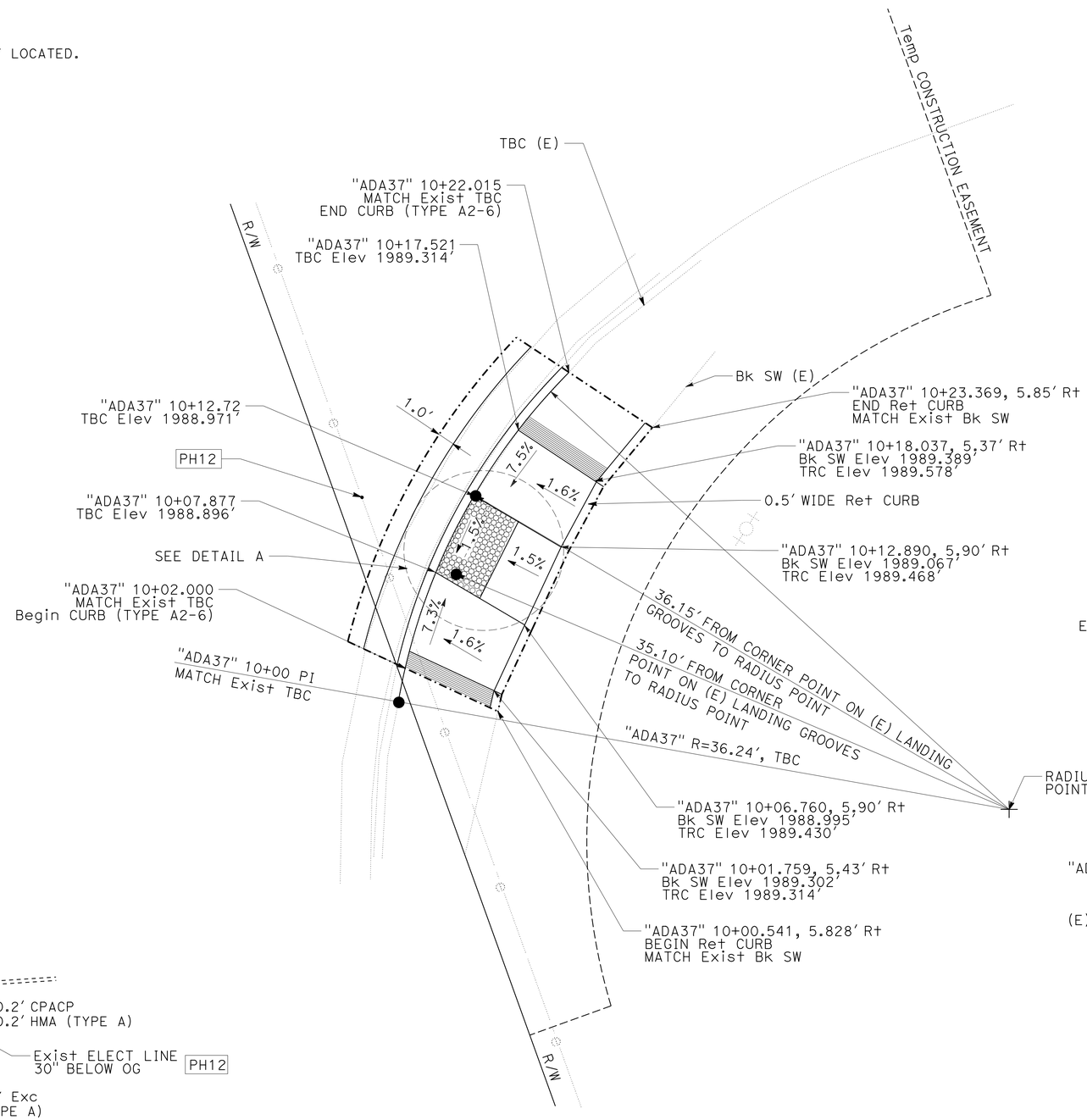

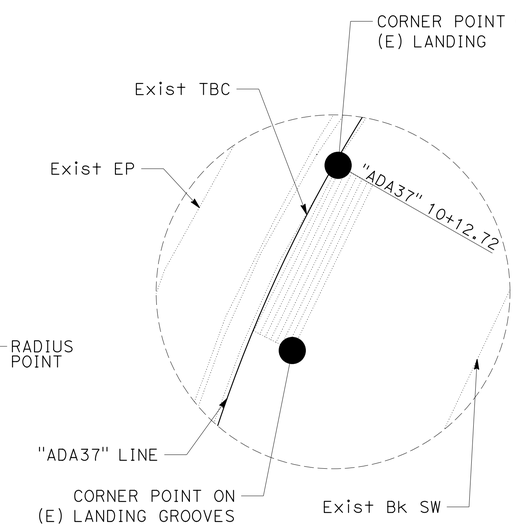

DETAIL A

ONLY EXISTING FEATURES AND "ADA37" ALIGNMENT ARE SHOWN

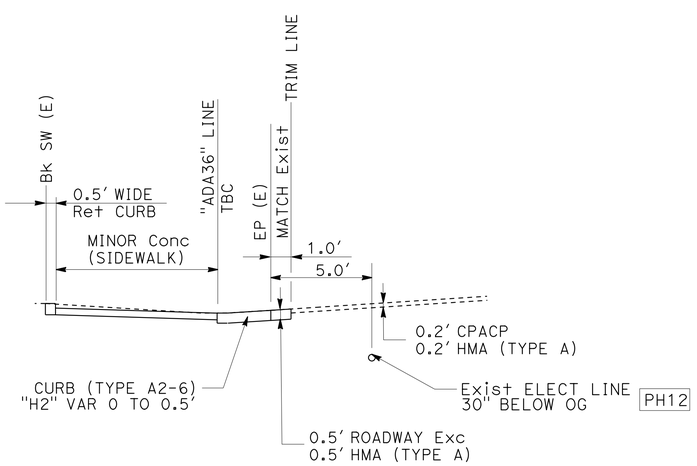

TYPICAL SECTION

FOR DETAILS NOT SHOWN
SEE STD PLANS

CURB RAMP 37

PM 52.629
ROUTE 299 & TRINITY PLAZA

CONSTRUCTION DETAILS

NO SCALE

C-32

REVISED BY	DATE REVISED

CALCULATED-DESIGNED BY	CHECKED BY
JEANNIE STEFFAN	HEIDI BORDERS

FUNCTIONAL SUPERVISOR: JULIE CASEY

STATE OF CALIFORNIA - DEPARTMENT OF TRANSPORTATION
Caltrans®
DESIGN

P:\proj1\02\3E770_plans\pse\23e770ga032.dgn

LAST REVISION 11-25-14
DATE PLOTTED => 15-JAN-2015
TIME PLOTTED => 16:08

Dist	COUNTY	ROUTE	POST MILES TOTAL PROJECT	SHEET No.	TOTAL SHEETS
02	Tri	299	36.9/53.5	37	165

Heidi Borders 11-25-14
REGISTERED CIVIL ENGINEER DATE

11-26-14
PLANS APPROVAL DATE

HEIDI E. BORDERS No. C64194 Exp. 6-30-15 CIVIL — REGISTERED PROFESSIONAL ENGINEER — STATE OF CALIFORNIA

THE STATE OF CALIFORNIA OR ITS OFFICERS OR AGENTS SHALL NOT BE RESPONSIBLE FOR THE ACCURACY OR COMPLETENESS OF SCANNED COPIES OF THIS PLAN SHEET.

NOTES:

1. FOR ACCURATE RIGHT OF WAY DATA, CONTACT RIGHT OF WAY ENGINEERING AT THE DISTRICT OFFICE.
2. EXISTING UTILITIES SHOWN HAVE NOT BEEN POSITIVELY LOCATED.

ABBREVIATIONS:

TBC	TOP BACK OF CURB
TRC	TOP OF RETAINING CURB
CPACP	COLD PLANE ASPHALT CONCRETE PAVEMENT
(E)	EXISTING

LEGEND:

- CURB RAMP GROOVING
- DETECTABLE WARNING SURFACE
- COLD PLANE AC PAVEMENT
- TRIM LINE
- # — CURB RAMP NUMBER
- PH# — POTHOLE LOCATION

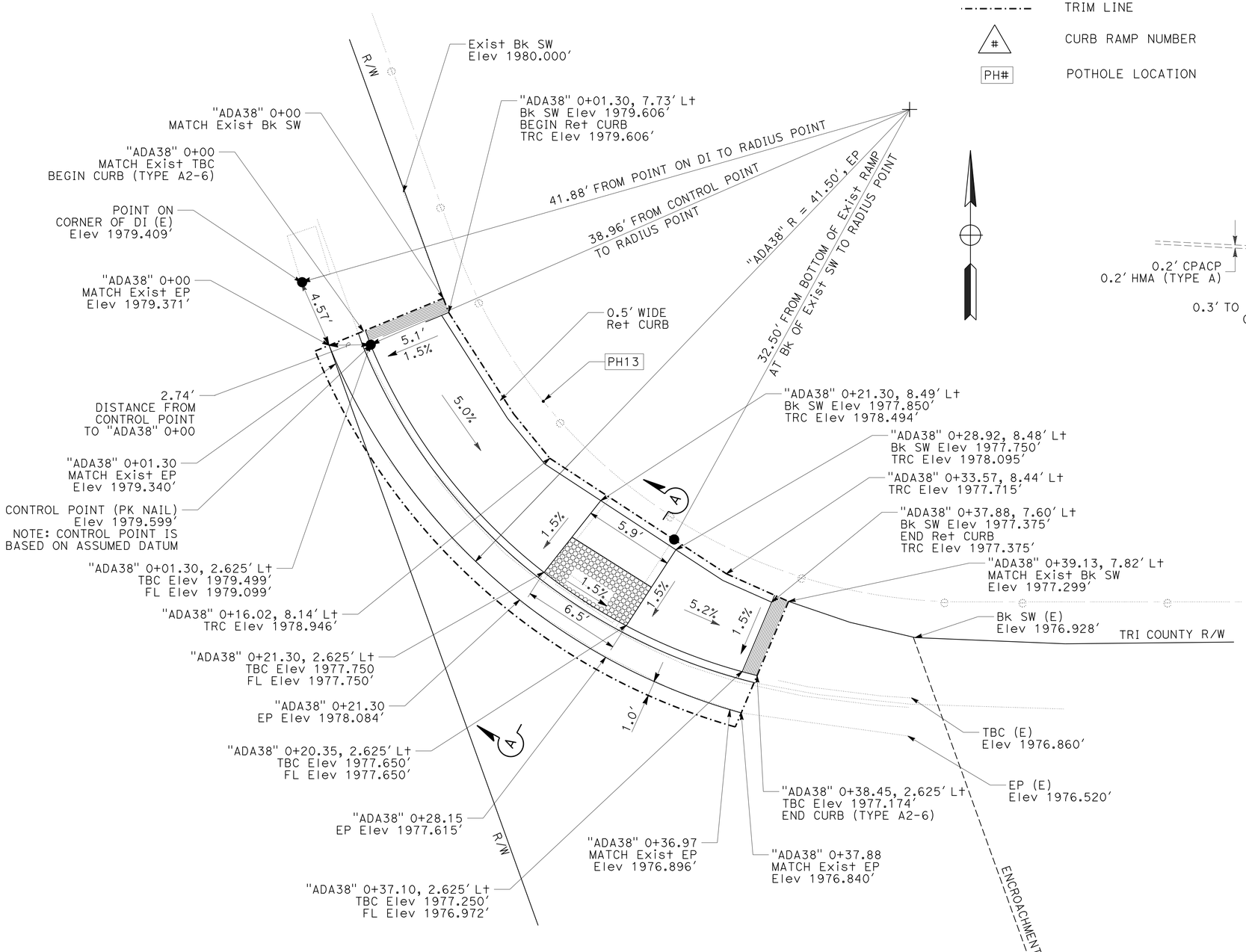

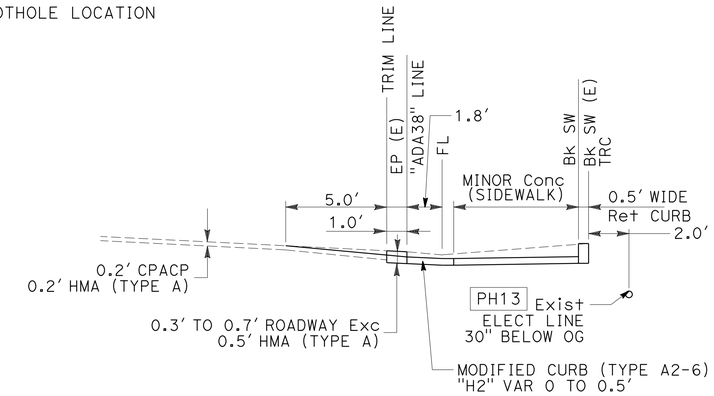

SECTION A-A

(Typ)

FOR DETAILS NOT SHOWN
SEE STD PLANS

CURB RAMP 38

PM 52.72
ROUTE 299 & MARTIN Rd

CONSTRUCTION DETAILS

NO SCALE

C-33

STATE OF CALIFORNIA - DEPARTMENT OF TRANSPORTATION
Caltrans DESIGN

FUNCTIONAL SUPERVISOR: JULIE CASEY
CALCULATED-DESIGNED BY: JEANNIE STEFFAN
CHECKED BY: HEIDI BORDERS
REVISED BY
DATE REVISED

P:\proj1\02\3E770_plans\pse\23e770ga033.dgn

LAST REVISION 11-25-14
DATE PLOTTED => 15-JAN-2015
TIME PLOTTED => 16:08

Dist	COUNTY	ROUTE	POST MILES TOTAL PROJECT	SHEET No.	TOTAL SHEETS
02	Tri	299	36.9/53.5	38	165

Heidi Borders 11-25-14
REGISTERED CIVIL ENGINEER DATE

11-26-14
PLANS APPROVAL DATE

REGISTERED PROFESSIONAL ENGINEER
HEIDI E. BORDERS
No. C64194
Exp. 6-30-15
CIVIL
STATE OF CALIFORNIA

THE STATE OF CALIFORNIA OR ITS OFFICERS OR AGENTS SHALL NOT BE RESPONSIBLE FOR THE ACCURACY OR COMPLETENESS OF SCANNED COPIES OF THIS PLAN SHEET.

LEGEND:

COLD PLANE AC PAVEMENT

ABBREVIATIONS:

CPACP COLD PLANE ASPHALT CONCRETE PAVEMENT
(E) EXISTING

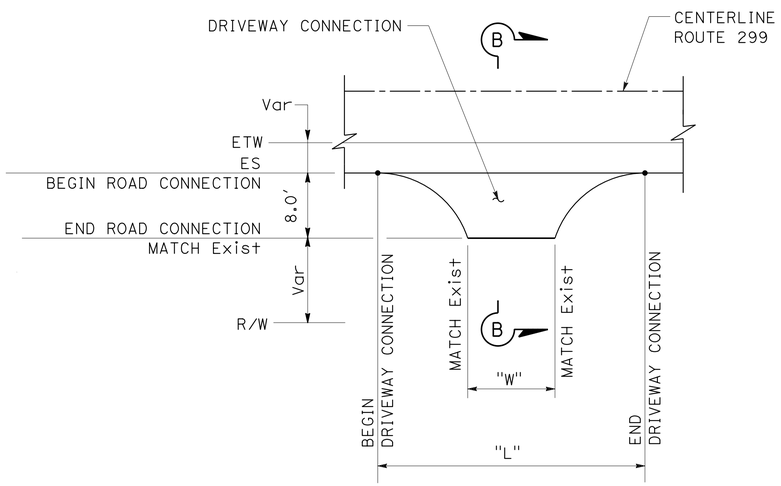

PLAN

DRIVEWAY AND MINOR ROAD CONNECTION

PM 36.90 TO PM 49.70

NOTE: NO DRIVEWAY OR MINOR ROAD CONNECTION CONFORMS WITHIN LIMITS OF COLD PLANE

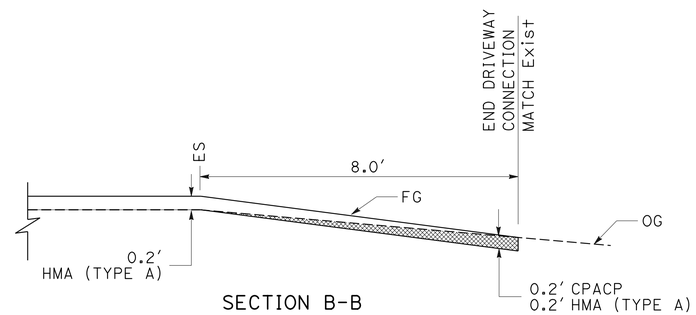

SECTION B-B

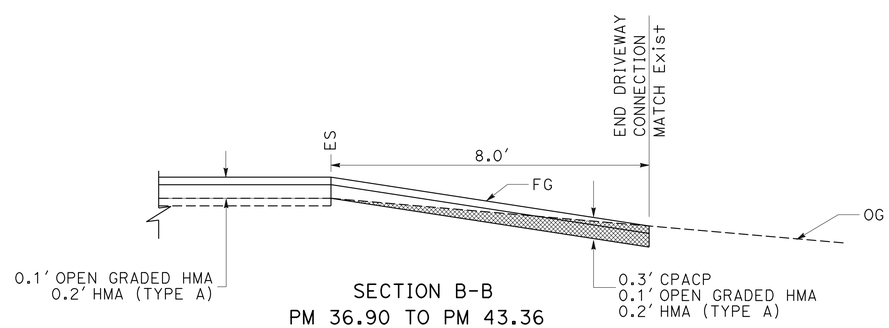

SECTION B-B
PM 36.90 TO PM 43.36

DRIVEWAY AND MINOR ROAD CONNECTIONS

POST MILE	R+/L+	"L" (LF)	"W" (LF)	AREA (SQFT)	DESCRIPTION
37.33	LT	190	140	1320	BROOK GULCH Rd
38.31	RT	335	300	2540	
38.42	RT	80	50	520	TRINITY LODGE
38.45	LT	80	45	500	
39.87	RT	180	180	1440	BIG FOOT CAMP GROUND
41.39	LT	160	115	1100	POWER HOUSE Rd
41.48	LT	80	45	500	
41.53	LT	80	45	500	
42.43	LT	50	20	280	
43.61	LT	80	60	560	
44.60	LT	100	55	620	
44.87	LT	130	100	920	
45.57	LT	180	155	1340	SLATTERY POND Rd
45.58	RT	135	90	900	EAGLE ROCK Inc.
48.50	RT	120	90	840	JENNINGS Rd Pv+
48.94	LT	90	55	580	OREGON SPRINGS Rd
49.60	LT	70	50	480	
49.68	LT	65	50	460	

CONSTRUCTION DETAILS

NO SCALE

C-34

REVISED BY | DATE REVISED
JEANNIE STEFFAN | HEIDI BORDERS
CALCULATED-DESIGNED BY | CHECKED BY
FUNCTIONAL SUPERVISOR
JULIE CASEY

STATE OF CALIFORNIA - DEPARTMENT OF TRANSPORTATION
Caltrans
DESIGN

P:\proj1\02\3E770_plans\pse\23e770ga034.dgn

LAST REVISION 11-25-14 | DATE PLOTTED => 15-JAN-2015 | TIME PLOTTED => 16:08

Dist	COUNTY	ROUTE	POST MILES TOTAL PROJECT	SHEET No.	TOTAL SHEETS
02	Tri	299	36.9/53.5	39	165

Heidi Borders 11-25-14
REGISTERED CIVIL ENGINEER DATE

11-26-14
PLANS APPROVAL DATE

REGISTERED PROFESSIONAL ENGINEER HEIDI E. BORDERS No. C64194 Exp. 6-30-15 CIVIL STATE OF CALIFORNIA

THE STATE OF CALIFORNIA OR ITS OFFICERS OR AGENTS SHALL NOT BE RESPONSIBLE FOR THE ACCURACY OR COMPLETENESS OF SCANNED COPIES OF THIS PLAN SHEET.

LEGEND:

COLD PLANE AC PAVEMENT

ABBREVIATIONS:

CPACP COLD PLANE ASPHALT CONCRETE PAVEMENT

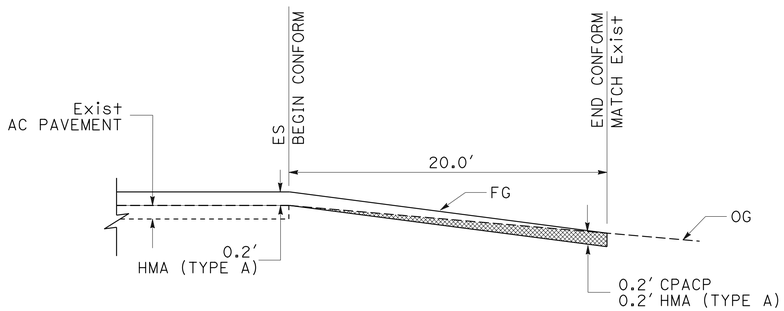

SECTION A-A
TYPICAL FOR PAVED ROAD CONNECTIONS
PM 43.5 TO PM 49.7

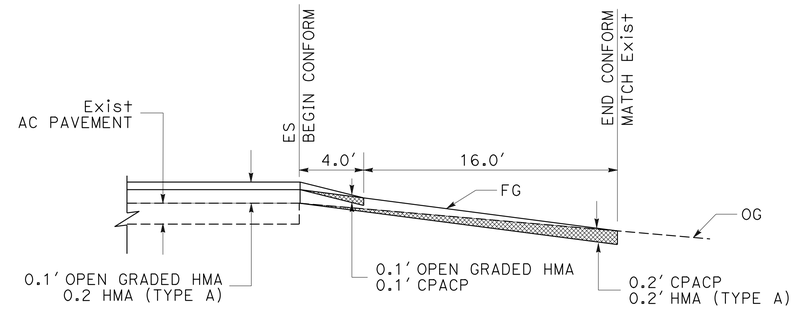

SECTION A-A
TYPICAL FOR PAVED ROAD CONNECTIONS
PM 36.9 TO PM 43.36

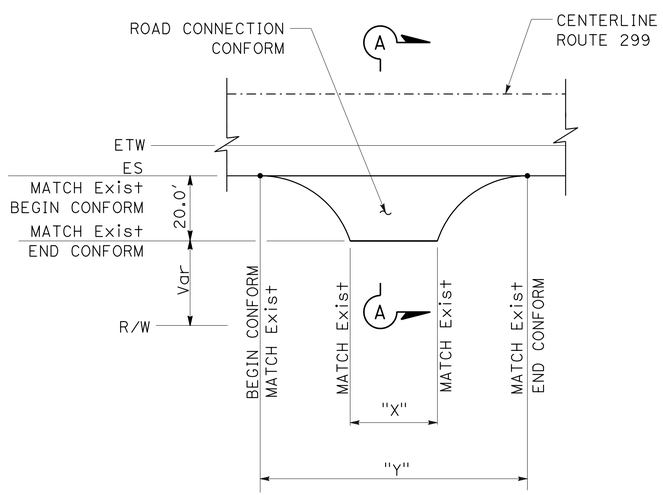

PLAN

ROAD CONNECTION CONFORM

PM 36.9 TO PM 49.7

ROAD CONNECTION CONFORM

POST MILE	R+/L+	COLD PLANE AC PAVEMENT (SQYD)	DESCRIPTION	"X" LF	"Y" LF
37.05	R+	295	TRINITY RIVER ACCESS	55	150
37.05	L+	305		50	160
40.01	R+	242	ACORN LANE	50	120
40.15	L+	191	VALDOR Rd	60	80
42.15	L+	244	JUNCTION CITY CAMP GROUND	45	125
42.64	L+	131		20	70
43.36	L+	177	GILZEAN Rd	40	85
43.50	R+	945	JUNCTION CITY STORE	400	450
43.50	L+	395	CANYON CREEK	160	195
43.62	R+	139	RANGER STATION	35	90
43.66	R+	256	DUTCH CREEK Rd	85	145
44.00	R+	545	SKY RANCH Rd	150	340
44.10	R+	206	SKY RANCH Rd	55	130
44.48	L+	111	JC DUMP Rd	30	70
44.50	L+	122	JC DUMP Rd	30	80
44.59	L+	150	RIFLE RANGE Rd	35	100
47.49	R+	139	CASTLE Rd	30	95
48.07	R+	239	RWIS	85	130

CONSTRUCTION DETAILS

NO SCALE

C-35

REVISED BY | DATE REVISED
JEANNIE STEFFAN | HEIDI BORDERS
CALCULATED-DESIGNED BY | CHECKED BY
FUNCTIONAL SUPERVISOR
JULIE CASEY

STATE OF CALIFORNIA - DEPARTMENT OF TRANSPORTATION
Caltrans
DESIGN

P:\proj1\02\3E770_plans\pse\23e770ga035.dgn

LAST REVISION 11-25-14 | DATE PLOTTED => 15-JAN-2015 | TIME PLOTTED => 16:08

Dist	COUNTY	ROUTE	POST MILES TOTAL PROJECT	SHEET No.	TOTAL SHEETS
02	Tri	299	36.9/53.5	40	165

Heidi Borders 11-25-14
REGISTERED CIVIL ENGINEER DATE

11-26-14
PLANS APPROVAL DATE

REGISTERED PROFESSIONAL ENGINEER HEIDI E. BORDERS No. C64194 Exp. 6-30-15 CIVIL STATE OF CALIFORNIA

THE STATE OF CALIFORNIA OR ITS OFFICERS OR AGENTS SHALL NOT BE RESPONSIBLE FOR THE ACCURACY OR COMPLETENESS OF SCANNED COPIES OF THIS PLAN SHEET.

NOTE:

* PROFILES TO BE PROVIDED BY THE ENGINEER

LEGEND:

COLD PLANE AC PAVEMENT (CPACP)

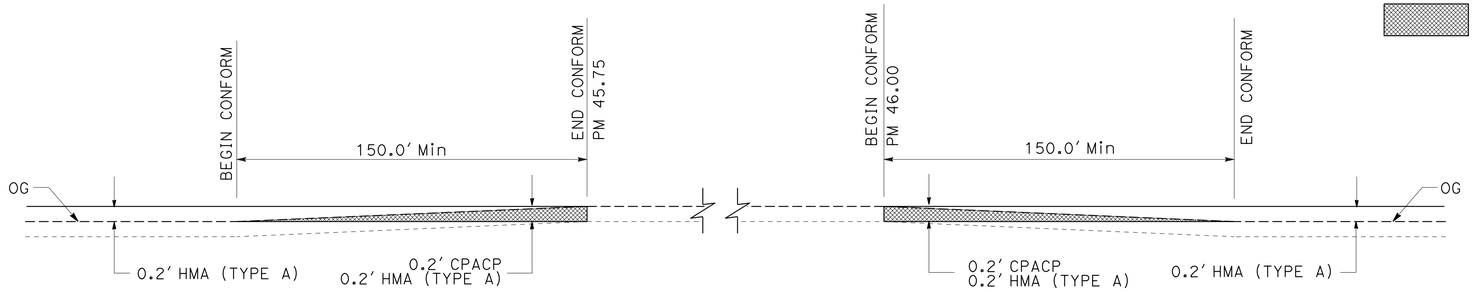

PM 45.75 PM 46.00

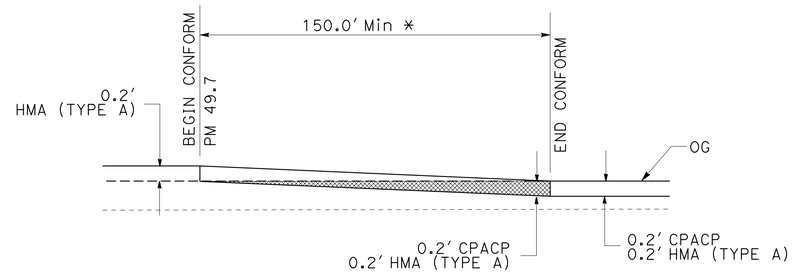

PM 49.7

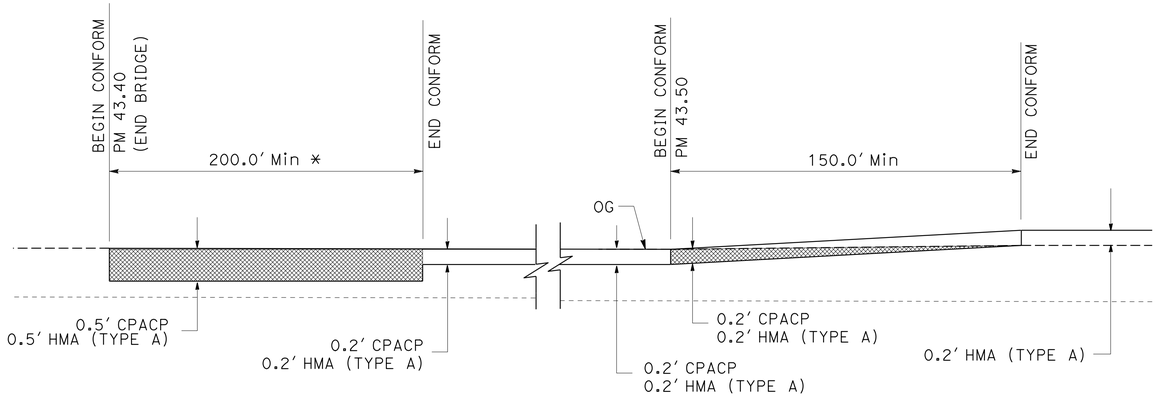

PM 43.40
CANYON CREEK BRIDGE

PM 43.50

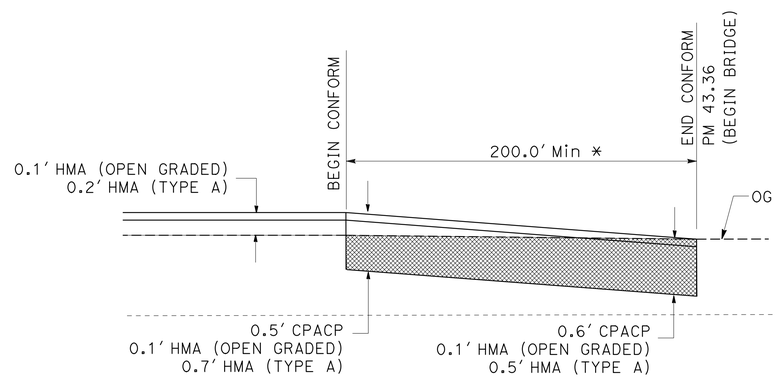

PM 43.36
CANYON CREEK BRIDGE

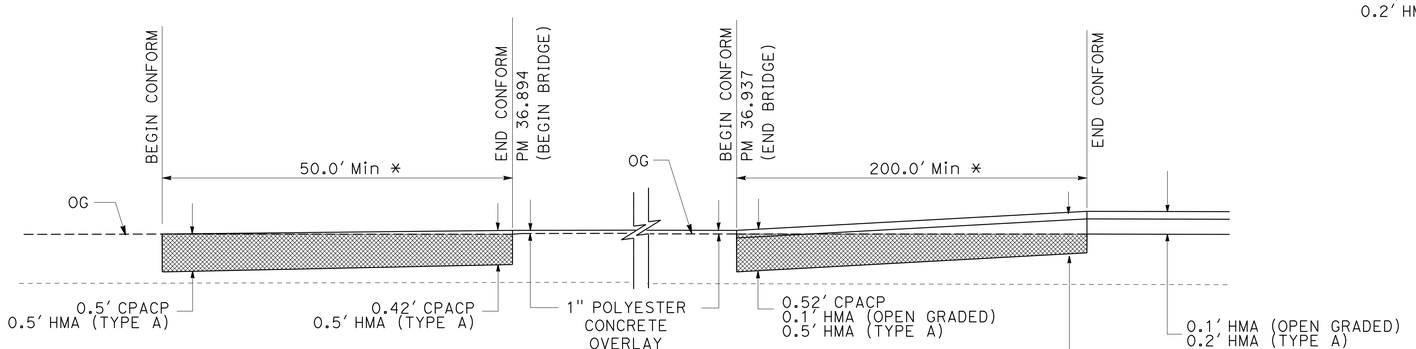

PM 36.894 & PM 36.937
NORTH FORK TRINITY RIVER BRIDGE

MAINLINE AND BRIDGE CONFORMS

CONSTRUCTION DETAILS

NO SCALE

C-36

REVISED BY	DATE REVISED

CALCULATED-DESIGNED BY	CHECKED BY
JEANNIE STEFFAN	HEIDI BORDERS

FUNCTIONAL SUPERVISOR: JULIE CASEY

STATE OF CALIFORNIA - DEPARTMENT OF TRANSPORTATION
Caltrans
DESIGN

P:\proj1\02\3E7710_plans\pse\23e770ga036.dgn

LAST REVISION 11-25-14 | DATE PLOTTED => 15-JAN-2015 | TIME PLOTTED => 16:08

Dist	COUNTY	ROUTE	POST MILES TOTAL PROJECT	SHEET No.	TOTAL SHEETS
02	Tri	299	36.9/53.5	41	165

Heidi Borders 11-25-14
REGISTERED CIVIL ENGINEER DATE

11-26-14
PLANS APPROVAL DATE

REGISTERED PROFESSIONAL ENGINEER
HEIDI E. BORDERS
No. C64194
Exp. 6-30-15
CIVIL
STATE OF CALIFORNIA

THE STATE OF CALIFORNIA OR ITS OFFICERS OR AGENTS SHALL NOT BE RESPONSIBLE FOR THE ACCURACY OR COMPLETENESS OF SCANNED COPIES OF THIS PLAN SHEET.

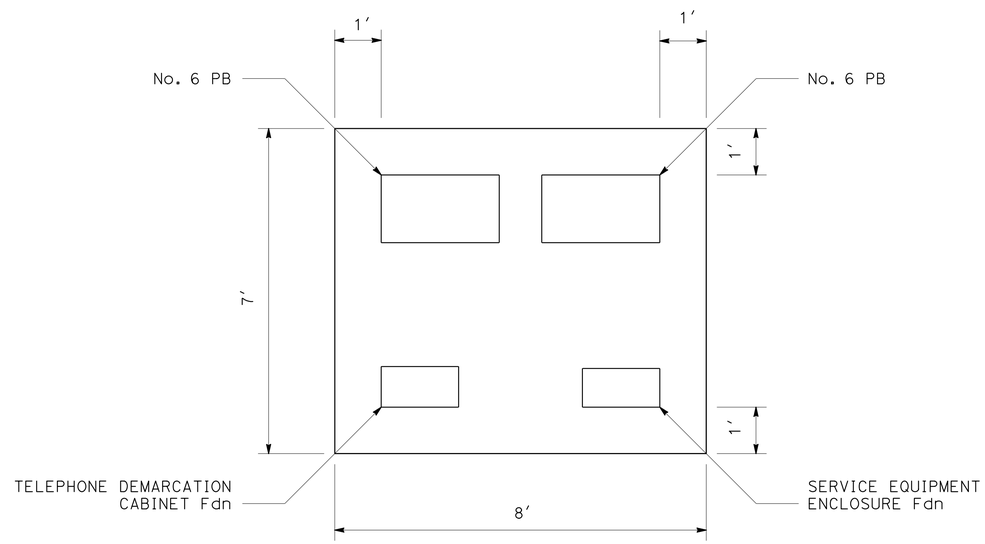

REPLACE CONCRETE SERVICE PAD

PM 48.0 RWIS
REPLACE IN KIND (0.33′ THICK)

NOTE: FOR QUANTITY SEE CURB RAMP QUANTITY TABLE

CONSTRUCTION DETAILS

NO SCALE

C-37

REVISED BY	DATE REVISED

CALCULATED-DESIGNED BY	JEANNIE STEFFAN
CHECKED BY	HEIDI BORDERS
FUNCTIONAL SUPERVISOR	JULIE CASEY

STATE OF CALIFORNIA - DEPARTMENT OF TRANSPORTATION
Caltrans® DESIGN

P:\proj1\02\3E770_plans\pse\23e770ga037.dgn

LAST REVISION 11-25-14 | DATE PLOTTED => 15-JAN-2015 | TIME PLOTTED => 16:08

Dist	COUNTY	ROUTE	POST MILES TOTAL PROJECT	SHEET No.	TOTAL SHEETS
02	Tri	299	36.9/53.5	42	165

Heidi Borders 11-25-14
REGISTERED CIVIL ENGINEER DATE

11-26-14
PLANS APPROVAL DATE

REGISTERED PROFESSIONAL ENGINEER
HEIDI E. BORDERS
No. C64194
Exp. 6-30-15
CIVIL
STATE OF CALIFORNIA

THE STATE OF CALIFORNIA OR ITS OFFICERS OR AGENTS SHALL NOT BE RESPONSIBLE FOR THE ACCURACY OR COMPLETENESS OF SCANNED COPIES OF THIS PLAN SHEET.

LEGEND:

1.0' CLASS 2 AB

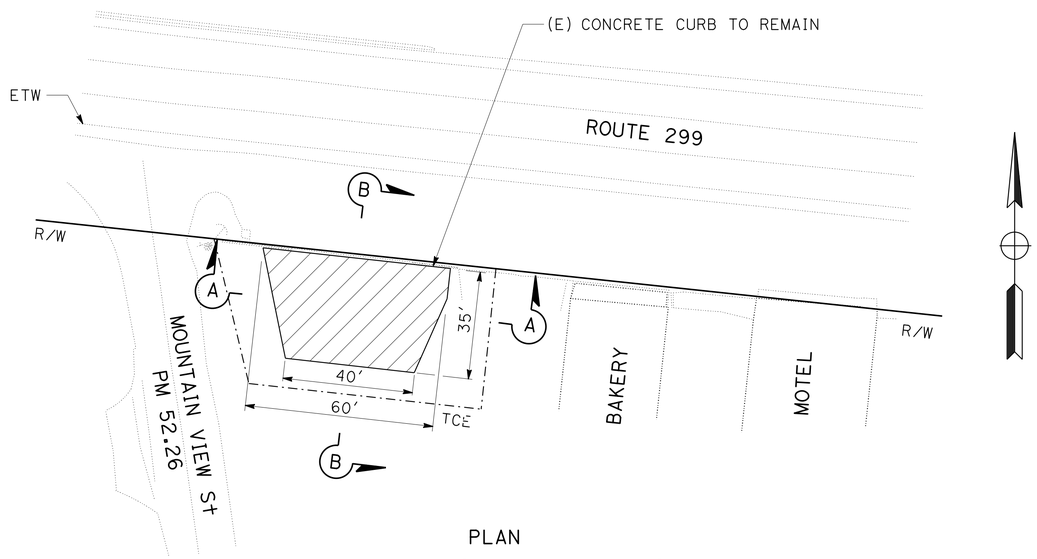

PLAN

PARKING AREA BASE

PM 52.27 Rt

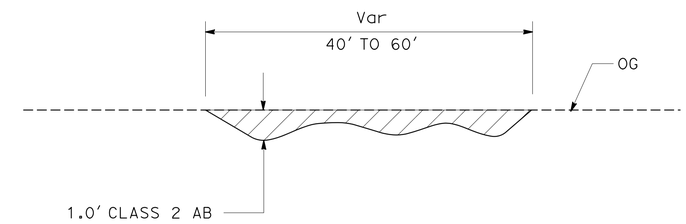

SECTION A-A
(Typ)

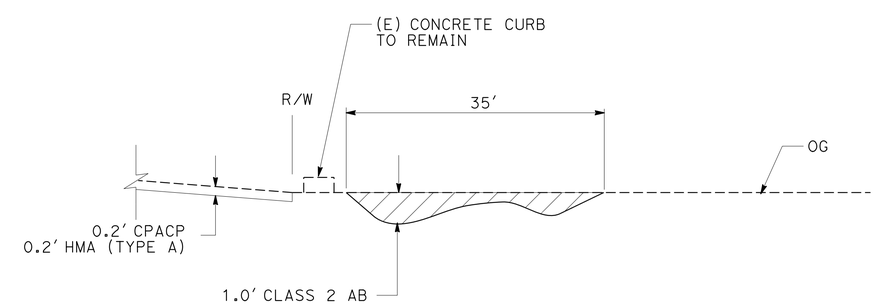

SECTION B-B

CONSTRUCTION DETAILS

NO SCALE

C-38

CALCULATED-DESIGNED BY	REVISED BY
CHECKED BY	DATE REVISED

FUNCTIONAL SUPERVISOR: JULIE CASEY

JEANNIE STEFFAN
HEIDI BORDERS

STATE OF CALIFORNIA - DEPARTMENT OF TRANSPORTATION
Caltrans
DESIGN

P:\proj\02\3E770_plans\pse\23e770ga038.dgn

LAST REVISION 11-25-14 | DATE PLOTTED => 15-JAN-2015 | TIME PLOTTED => 16:08

Dist	COUNTY	ROUTE	POST MILES TOTAL PROJECT	SHEET No.	TOTAL SHEETS
02	Tri	299	36.9/53.5	43	165

Heidi Borders 11-25-14
REGISTERED CIVIL ENGINEER DATE

11-26-14
PLANS APPROVAL DATE

REGISTERED PROFESSIONAL ENGINEER HEIDI E. BORDERS No. C64194 Exp. 6-30-15 CIVIL STATE OF CALIFORNIA

THE STATE OF CALIFORNIA OR ITS OFFICERS OR AGENTS SHALL NOT BE RESPONSIBLE FOR THE ACCURACY OR COMPLETENESS OF SCANNED COPIES OF THIS PLAN SHEET.

NOTES:

1. EXISTING UTILITIES HAVE NOT BEEN POSITIVELY LOCATED.
2. SEE DRAINAGE QUANTITIY SHEETS FOR DRAINAGE SYSTEM 21 QUANTITIES.
3. FOR DRAINAGE DETAILS NOT SHOWN, SEE DRAINAGE DETAIL SHEETS.
4. FOR ACCURATE RIGHT OF WAY DATA, CONTACT RIGHT OF WAY ENGINEERING AT THE DISTRICT OFFICE.

LEGEND:

- 2.25' ROADWAY Exc 1.00' HMA (TYPE A) 1.25' CLASS 2 AB
- RSP (2T, METHOD A)
- RSP (1/2T, METHOD A)

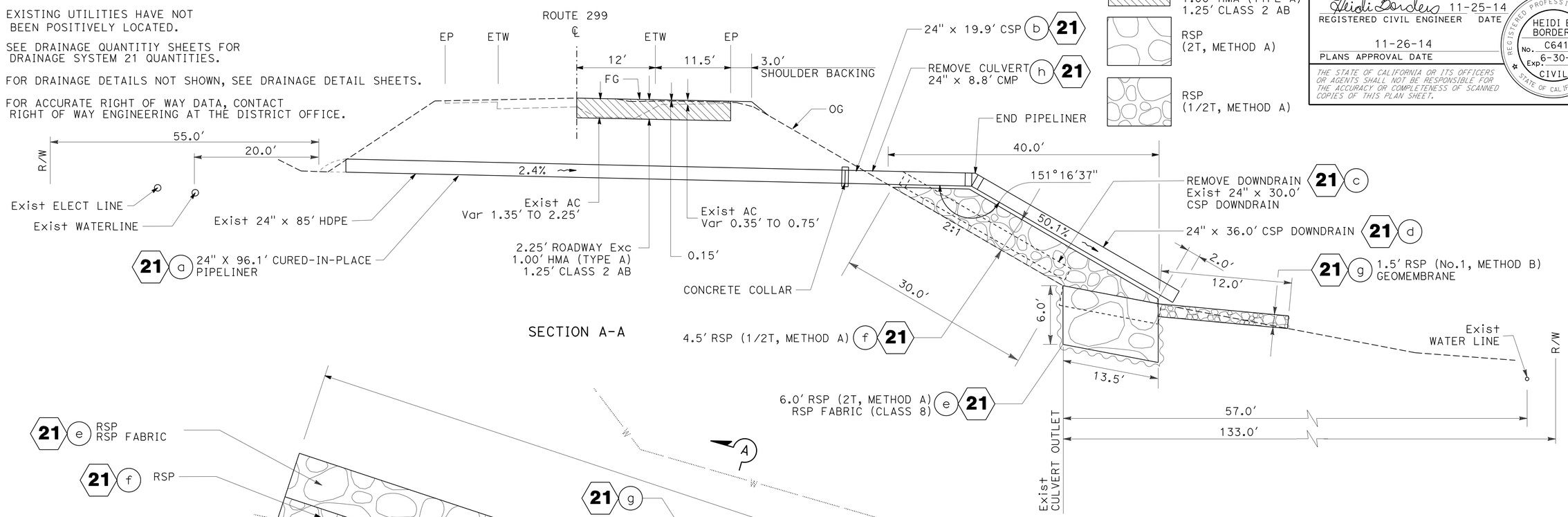

SLIP OUT REPAIR
PM 50.5

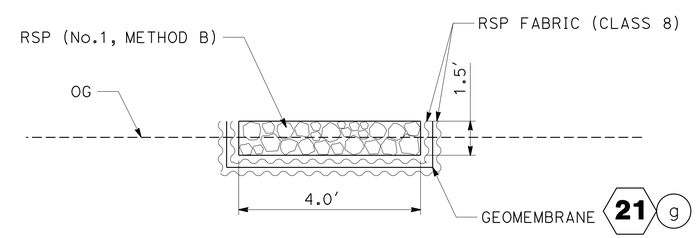

GEOMEMBRANE
(Typ)

CONSTRUCTION DETAILS

NO SCALE

C-39

REVISED BY	DATE REVISED

CALCULATED-DESIGNED BY: JEANNIE STEFFAN
CHECKED BY: HEIDI BORDERS
FUNCTIONAL SUPERVISOR: JULIE CASEY

STATE OF CALIFORNIA - DEPARTMENT OF TRANSPORTATION
Caltrans
DESIGN

P:\proj1\02\3E770_plans\pse\23e770ga039.dgn

LAST REVISION 11-25-14 | DATE PLOTTED => 15-JAN-2015 | TIME PLOTTED => 16:08

Dist	COUNTY	ROUTE	POST MILES TOTAL PROJECT	SHEET No.	TOTAL SHEETS
02	Tri	299	36.9/53.5	44	165

Heidi Borders 11-25-14
REGISTERED CIVIL ENGINEER DATE

11-26-14
PLANS APPROVAL DATE

REGISTERED PROFESSIONAL ENGINEER
HEIDI E. BORDERS
No. C64194
Exp. 6-30-15
CIVIL
STATE OF CALIFORNIA

THE STATE OF CALIFORNIA OR ITS OFFICERS OR AGENTS SHALL NOT BE RESPONSIBLE FOR THE ACCURACY OR COMPLETENESS OF SCANNED COPIES OF THIS PLAN SHEET.

LEGEND:

AREA TO REMAIN UNPAVED

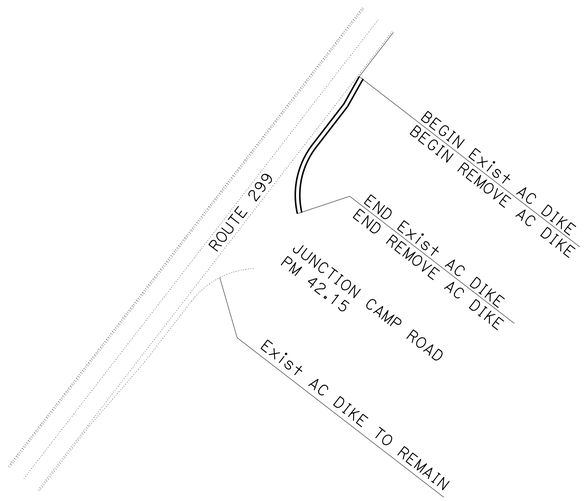

PLAN

JUNCTION CAMP ROAD AC DIKE REMOVAL

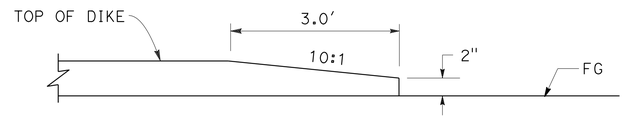

DIKE END TAPER

TYPICAL

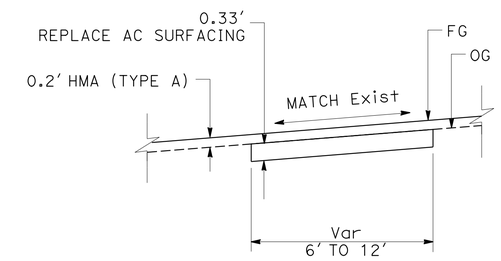

REPLACE AC SURFACING

PM 47.9 TO 49.7

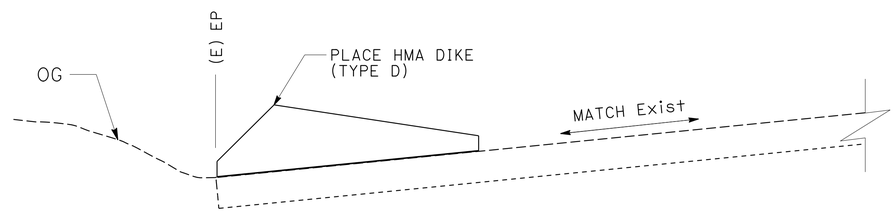

MOUNTABLE DIKE (TYPE D) TYPICAL SECTION

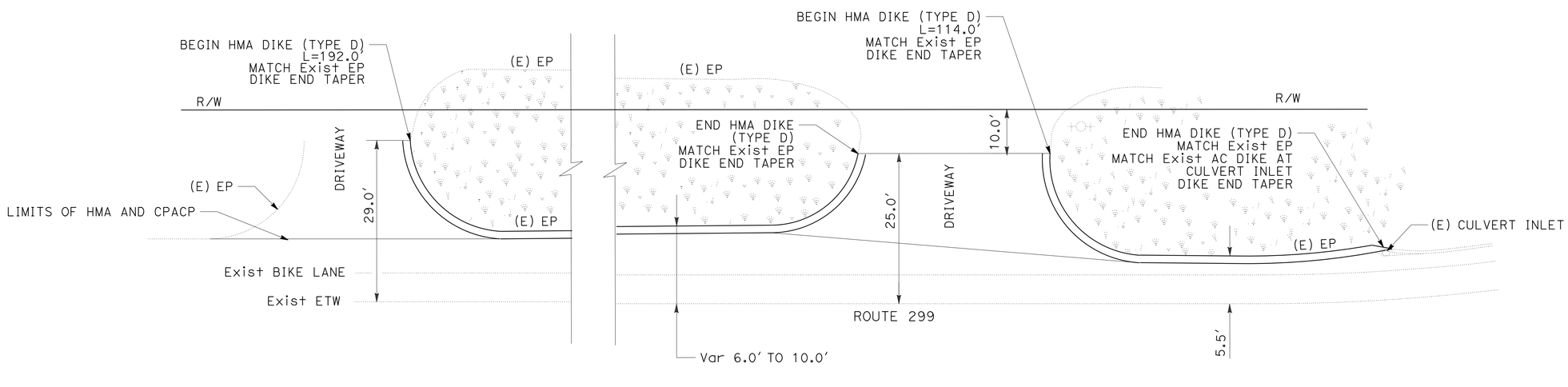

MOUNTABLE DIKE (TYPE D)

PM 52.39 R+ TO PM 52.45 R+
AT ACE HARDWARE

CONSTRUCTION DETAILS

NO SCALE

C-40

REVISED BY	DATE REVISED

CALCULATED-DESIGNED BY: JEANNIE STEFFAN
CHECKED BY: HEIDI BORDERS
FUNCTIONAL SUPERVISOR: JULIE CASEY

STATE OF CALIFORNIA - DEPARTMENT OF TRANSPORTATION
Caltrans
DESIGN

P:\proj1\02\3E770_plans\pse\23e770ga040.dgn

LAST REVISION 11-25-14 | DATE PLOTTED => 15-JAN-2015 | TIME PLOTTED => 16:08

Dist	COUNTY	ROUTE	POST MILES TOTAL PROJECT	SHEET No.	TOTAL SHEETS
02	Tri	299	36.9/53.5	45	165

Heidi Borders 11-25-14
REGISTERED CIVIL ENGINEER DATE

11-26-14
PLANS APPROVAL DATE

REGISTERED PROFESSIONAL ENGINEER HEIDI E. BORDERS No. C64194 Exp. 6-30-15 CIVIL STATE OF CALIFORNIA

THE STATE OF CALIFORNIA OR ITS OFFICERS OR AGENTS SHALL NOT BE RESPONSIBLE FOR THE ACCURACY OR COMPLETENESS OF SCANNED COPIES OF THIS PLAN SHEET.

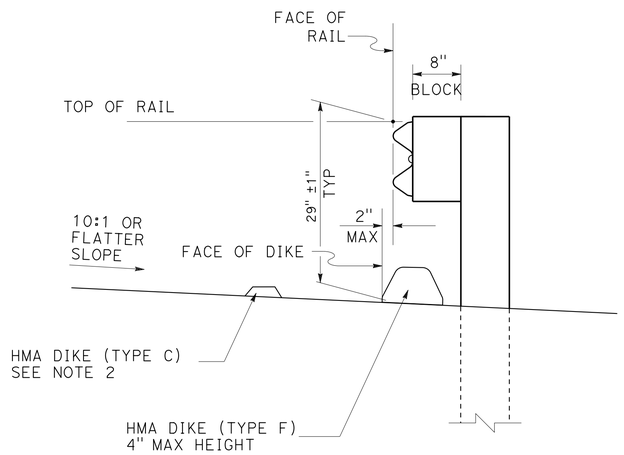

MBGR DIKE POSITIONING

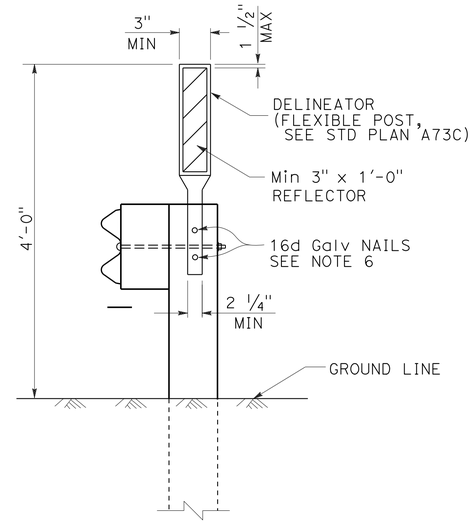

GUARDRAIL DELINEATION

SEE NOTE 5

NOTES:

1. FOR CURB AND DIKE DETAILS, SEE RSP A87A AND RSP A87B.
2. ONLY TYPE C DIKE MAY BE USED UNDER OR IN FRONT OF TERMINAL SYSTEMS, OR WHEN DIKE IS PLACED MORE THAN 2" IN FRONT OF FACE OF MBGR.
3. DIKE OR CURB MUST BE PLACED IN THE STD POSITION UNLESS OTHERWISE SHOWN. THE MAXIMUM HEIGHT OF THE DIKE OR CURB SHALL BE 4" FOR MBGR. DO NOT PLACE 6" MOUNTABLE DIKE UNDER GUARDRAIL.
4. GUARDRAIL DELINEATION TO BE USED WHERE SHOWN ON THE PROJECT PLANS.
5. FOR STEEL LINE POSTS, USE 1/4 - 20 SELF-TAPPING SCREWS IN 0.22" DIAMETER HOLES OR 1/4" BOLTS IN 9/32" DIAMETER HOLES.

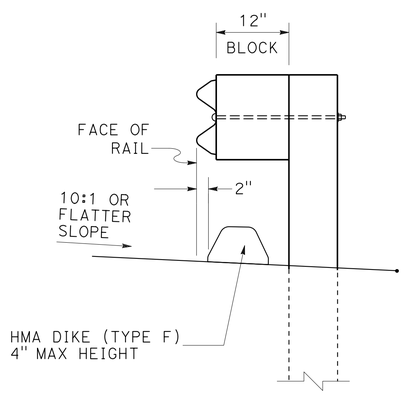

MBGR WITH 12" BLOCK DIKE POSITIONING

SNOW COUNTRY

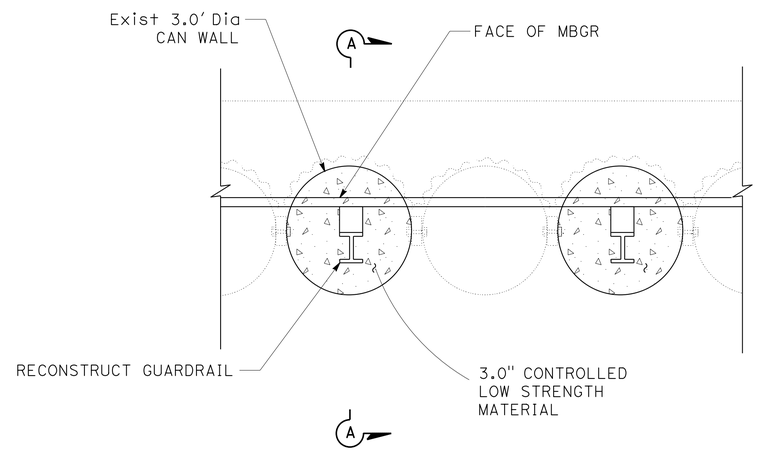

PLAN VIEW

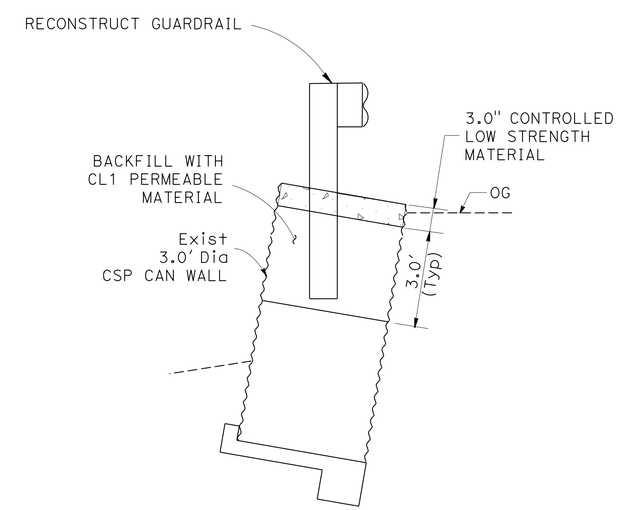

SECTION A-A

RECONSTRUCT MBGR CAN WALL INSTALLATION

GUARDRAIL TYPICAL DIKE POSITIONING AND DELINEATION DETAILS

CONSTRUCTION DETAILS

NO SCALE

C-41

REVISED BY	DATE REVISED
JEANNIE STEFFAN	HEIDI BORDERS
CALCULATED-DESIGNED BY	CHECKED BY
FUNCTIONAL SUPERVISOR	JULIE CASEY

STATE OF CALIFORNIA - DEPARTMENT OF TRANSPORTATION
Caltrans
DESIGN

P:\proj1\02\3E770_plans\pse\23e770ga041.dgn

LAST REVISION 11-25-14 | DATE PLOTTED => 30-JAN-2015 | TIME PLOTTED => 12:18

Dist	COUNTY	ROUTE	POST MILES TOTAL PROJECT	SHEET No.	TOTAL SHEETS
02	Tri	299	36.9/53.5	46	165

Heidi Borders 11-25-14
REGISTERED CIVIL ENGINEER DATE

11-26-14
PLANS APPROVAL DATE

REGISTERED PROFESSIONAL ENGINEER HEIDI E. BORDERS No. C64194 Exp. 6-30-15 CIVIL STATE OF CALIFORNIA

THE STATE OF CALIFORNIA OR ITS OFFICERS OR AGENTS SHALL NOT BE RESPONSIBLE FOR THE ACCURACY OR COMPLETENESS OF SCANNED COPIES OF THIS PLAN SHEET.

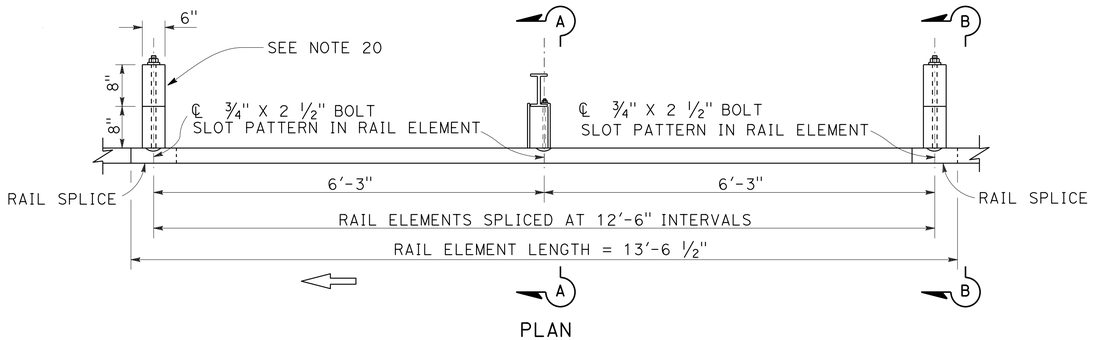

PLAN

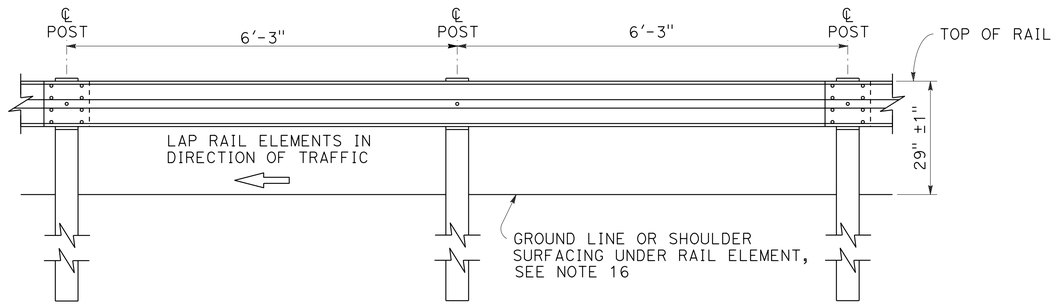

ELEVATION

METAL BEAM GUARDRAILING

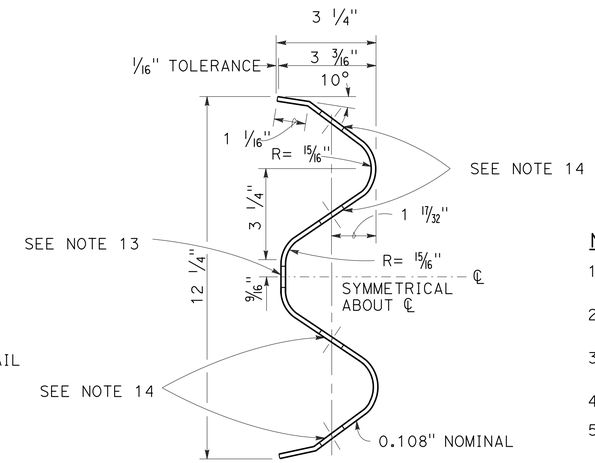

SECTION THRU RAIL ELEMENT

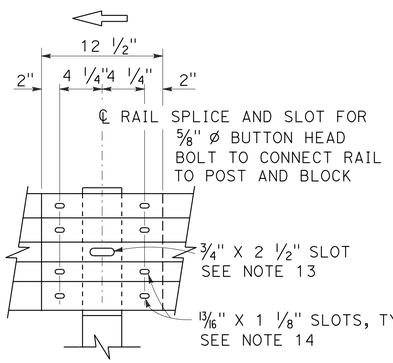

ELEVATION

RAIL ELEMENT SPLICE DETAIL

A) CONNECT THE OVERLAPPED END OF THE RAIL ELEMENTS WITH ⅝" Ø X 1 ⅜" BUTTON HEAD OVAL SHOULDER SPLICE BOLTS INSERTED INTO THE 13#16" X 1 1#8" SLOTS AND BOLTED TOGETHER WITH ⅝" Ø RECESSED HEX NUTS. RECESS OF HEX NUT POINTS TOWARD RAIL ELEMENT. A TOTAL OF 8 BOLTS AND NUTS ARE TO BE USED AT EACH RAIL SPLICE CONNECTION.

B) THE ENDS OF THE RAIL ELEMENTS ARE TO BE OVERLAPPED IN THE DIRECTION OF TRAFFIC (SEE DETAILS).

C) WHERE END CAP IS TO BE ATTACHED TO THE END OF A RAIL ELEMENT, A TOTAL OF 4 OF THE ABOVE DESCRIBED SPLICE BOLTS AND NUTS ARE TO BE USED.

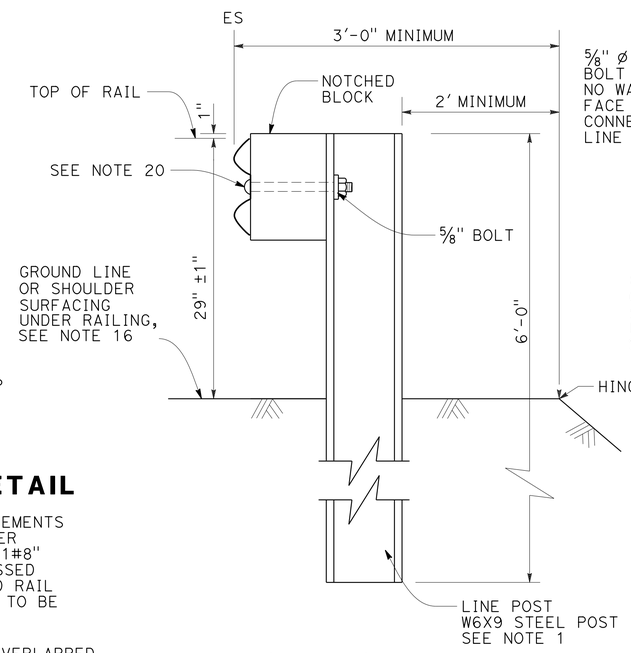

SECTION A-A
TYPICAL STEEL LINE POST INSTALLATION

SEE NOTE 4

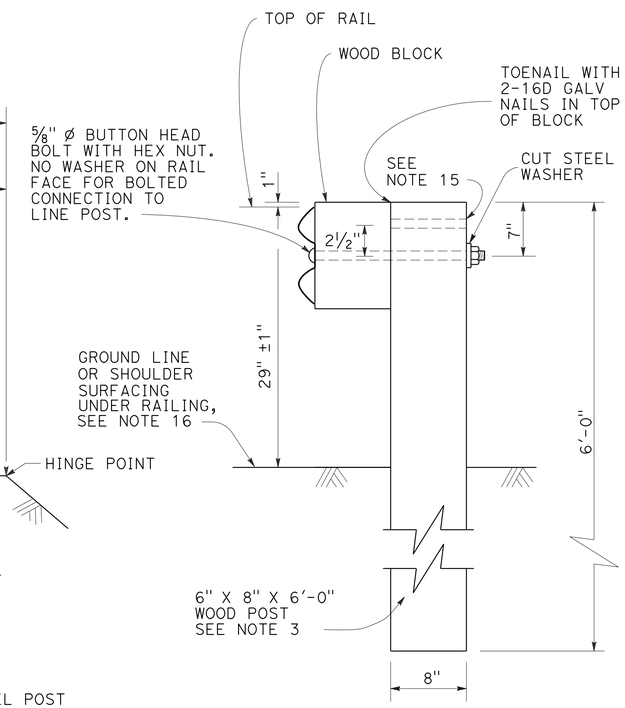

SECTION B-B
TYPICAL WOOD LINE POST INSTALLATION

SEE NOTE 4

NOTES:

1. FOR DETAILS NOT SHOWN OF STEEL POST AND BLOCKS, SEE RSP A77N2.
2. FOR DETAILS NOT SHOWN OF STANDARD HARDWARE USED TO CONSTRUCT GUARDRAILING, SEE RSP A77M1.
3. FOR DETAILS NOT SHOWN OF WOOD POSTS AND WOOD BLOCKS USED TO CONSTRUCT GUARDRAILING, SEE RSP A77N1.
4. FOR ADDITIONAL INSTALLATION DETAILS, SEE C-43.
5. GUARDRAILING POST SPACING TO BE 6'-3" CENTER TO CENTER, EXCEPT AS OTHERWISE NOTED.
6. FOR GUARDRAILING TYPICAL LAYOUTS, SEE STANDARD PLANS.
7. TO CONNECT RAILING TO TERMINAL SYSTEM END TREATMENT, TRANSITION THE TOP OF RAILING HEIGHT AT A RATIO OF 120:1 TO TERMINAL SYSTEM END TREATMENT HEIGHT PLUS ONE 12'-6" STANDARD RAILING SECTION AT THE TRANSITIONED HEIGHT FOR A HORIZONTAL CONNECTION TO THE END TREATMENT.
8. FOR GUARDRAILING END ANCHOR DETAILS, SEE C-46 AND C-47.
9. FOR DETAILS OF GUARDRAILING TRANSITION TO BRIDGE RAILING, SEE C-48.
10. FOR ADDITIONAL DETAILS OF GUARDRAILING CONNECTION TO BRIDGE RAILINGS, SEE C-50.
11. FOR STEEL LINE POSTS, USE 1/4-20 SELF-TAPPING SCREWS IN 0.22" Dia HOLES OR ¼" BOLTS IN 9/32" Dia HOLES.
12. FOR TYPICAL GUARDRAILING DELINEATION AND DIKE POSITIONING DETAILS, SEE C-41.
13. SLOTTED HOLE FOR BOLTED CONNECTION OF RAIL ELEMENT TO BLOCK AND POST.
14. SLOTTED HOLES FOR SPLICE BOLTS TO OVERLAP ENDS OF RAIL AND POST.
15. ALL HOLES IN WOOD POSTS AND BLOCKS SHALL BE ¾" DIA +/-1/16". SEE RSP A77N1.
16. INSTALL POSTS IN SOIL. WHEN INSTALLING POSTS THROUGH PAVEMENT, SEE TYPICAL LEAVE-OUT AREA DETAIL ON C-45.
17. SEE MEASURE HEIGHT AT GRADE BREAK DETAIL ON C-43.
18. DIMENSIONS FOR POST AND BLOCKS ARE NOMINAL.
19. FOR BOLTED CONNECTION TO RAIL FACE, USE ⅝" Dia BUTTON HEAD WITH HEX NUT AND NO WASHER ON RAIL FACE.
20. A SINGLE LINE POST MAY BE OFFSET UP TO 12" IN LINE WITH GUARDRAIL.

CONSTRUCTION DETAILS METAL BEAM GUARDRAILING STANDARD RAILING SECTION

NO SCALE

C-42

REVISED BY | DATE REVISED
JEANNIE STEFFAN | HEIDI BORDERS
CALCULATED-DESIGNED BY | CHECKED BY
FUNCTIONAL SUPERVISOR: JULIE CASEY

STATE OF CALIFORNIA - DEPARTMENT OF TRANSPORTATION
Caltrans® DESIGN

P:\proj1\02\3E770_plans\pse\23e770ga042.dgn

LAST REVISION | DATE PLOTTED => 15-JAN-2015 | TIME PLOTTED => 16:08
11-25-14

Dist	COUNTY	ROUTE	POST MILES TOTAL PROJECT	SHEET No.	TOTAL SHEETS
02	Tri	299	36.9/53.5	47	165

Heidi Borders 11-25-14
REGISTERED CIVIL ENGINEER DATE

11-26-14
PLANS APPROVAL DATE

REGISTERED PROFESSIONAL ENGINEER HEIDI E. BORDERS No. C64194 Exp. 6-30-15 CIVIL STATE OF CALIFORNIA

THE STATE OF CALIFORNIA OR ITS OFFICERS OR AGENTS SHALL NOT BE RESPONSIBLE FOR THE ACCURACY OR COMPLETENESS OF SCANNED COPIES OF THIS PLAN SHEET.

NOTES:

1. Max 10:1 SLOPE IN FRONT OF GUARDRAIL.
2. FOR POST AND BLOCK DETAILS NOT SHOWN, SEE RSP A77N1 AND A77N2.
3. WHEN A BREAK POINT IS BETWEEN 4′ AND 8′ IN FRONT OF THE FACE OF GUARDRAIL, THE HEIGHT OF TOP OF RAIL WILL BE DETERMINED BY THE ENGINEER.
4. FOR 8′ POST USE W6 X 15 STEEL POST.
5. BLOCKS MUST HAVE MEANS TO RESIST ROTATION OTHER THAN THROUGH BOLT.
6. PLACE RUB RAIL (GUARDRAIL ELEMENT) AND ATTACH TO POST WITH NO BLOCK WHEN HEIGHT OF GUARDRAIL IS Min 32" ABOVE FINISH GRADE UNDER FACE OF RAIL.

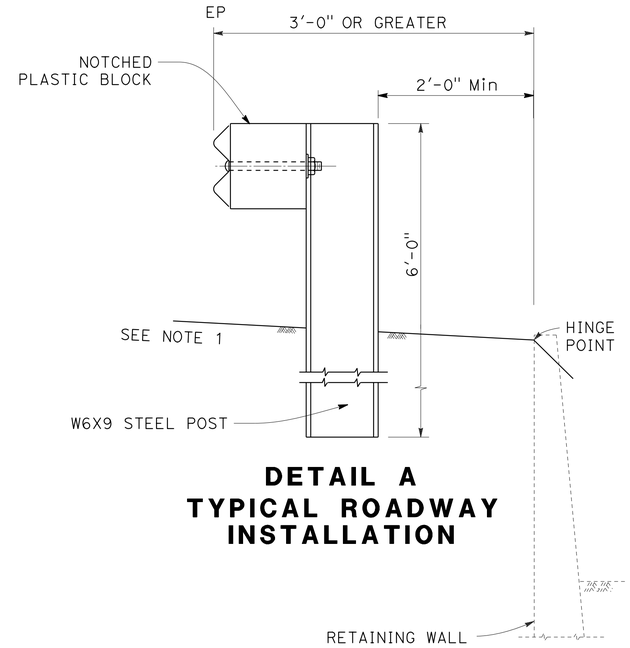

DETAIL A
TYPICAL ROADWAY INSTALLATION

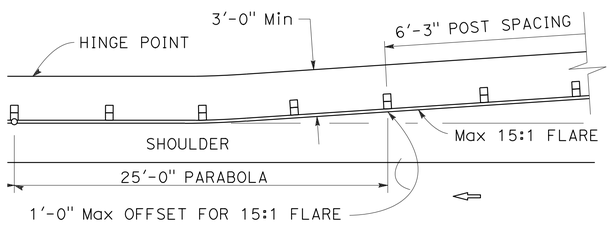

GUARDRAIL WITH FLARED ALIGNMENT

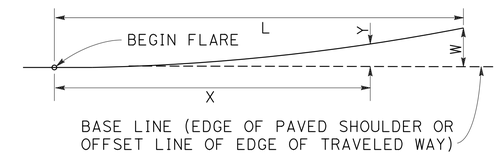

$$Y = \frac{WX^2}{L^2}$$

Y = OFFSET FROM BASE LINE
W = MAXIMUM OFFSET
X = DISTANCE ALONG BASE LINE
L = LENGTH OF FLARE

PARABOLIC FLARE OFFSETS

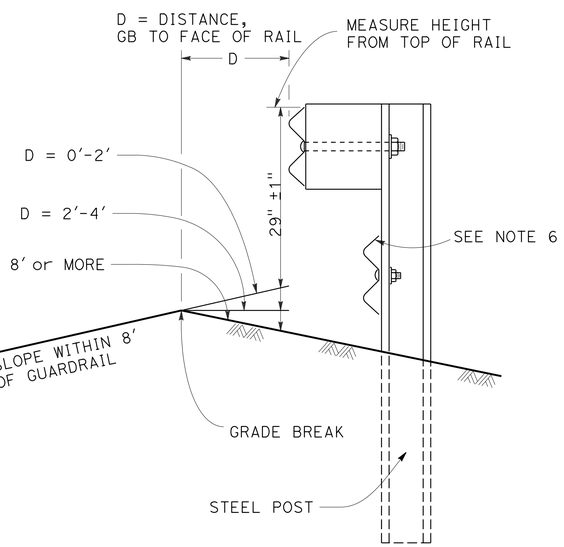

MEASURE HEIGHT DETAIL AT GRADE BREAK (GB)

WHEN THERE IS A BREAK POINT IN FRONT OF GUARDRAIL MEASURE HEIGHT OF GUARD RAIL BASED ON DISTANCE FROM GRADE BREAK TO ADJUST FOR TRAJECTORY.

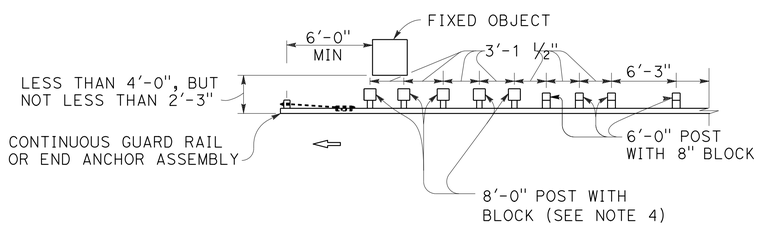

NOTE A:

FOR A SERIES OF FIXED OBJECTS (BRIDGE COLUMNS, OVERHEAD SIGN SUPPORTS, ETC.) ADDITIONAL 8′-0" POST WITH BLOCKS AT 3′-1 ½" CENTER TO CENTER SPACING ARE TO BE USED BETWEEN FIXED OBJECTS.

STRENGTHENED RAILING SECTIONS FOR FIXED OBJECT

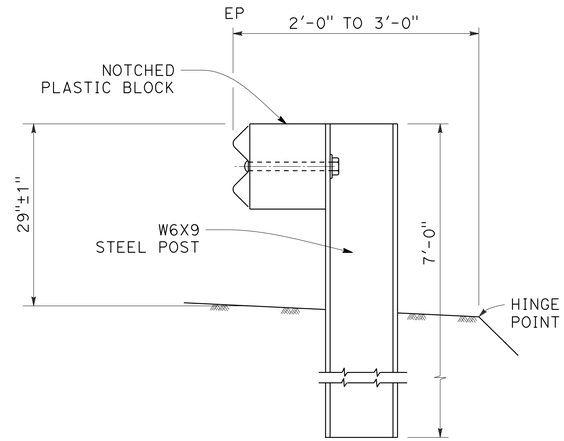

DETAIL B
NARROW ROADWAY INSTALLATION
SEE NOTE 2

POST EMBEDMENT

CONSTRUCTION DETAILS METAL BEAM GUARDRAILING TYPICAL LINE POST EMBEDMENT AND HINGE POINT OFFSET DETAILS

NO SCALE

C-43

REVISED BY	DATE REVISED
JEANNIE STEFFAN	HEIDI BORDERS
CALCULATED-DESIGNED BY	CHECKED BY
FUNCTIONAL SUPERVISOR	JULIE CASEY

STATE OF CALIFORNIA - DEPARTMENT OF TRANSPORTATION
Caltrans
DESIGN

P:\proj1\02\3E770_plans\pse\23e770ga043.dgn

LAST REVISION 11-25-14 | DATE PLOTTED => 15-JAN-2015 | TIME PLOTTED => 16:08

Dist	COUNTY	ROUTE	POST MILES TOTAL PROJECT	SHEET No.	TOTAL SHEETS
02	Tri	299	36.9/53.5	48	165

Heidi Borders 11-25-14
REGISTERED CIVIL ENGINEER DATE

11-26-14
PLANS APPROVAL DATE

REGISTERED PROFESSIONAL ENGINEER HEIDI E. BORDERS No. C64194 Exp. 6-30-15 CIVIL STATE OF CALIFORNIA

THE STATE OF CALIFORNIA OR ITS OFFICERS OR AGENTS SHALL NOT BE RESPONSIBLE FOR THE ACCURACY OR COMPLETENESS OF SCANNED COPIES OF THIS PLAN SHEET.

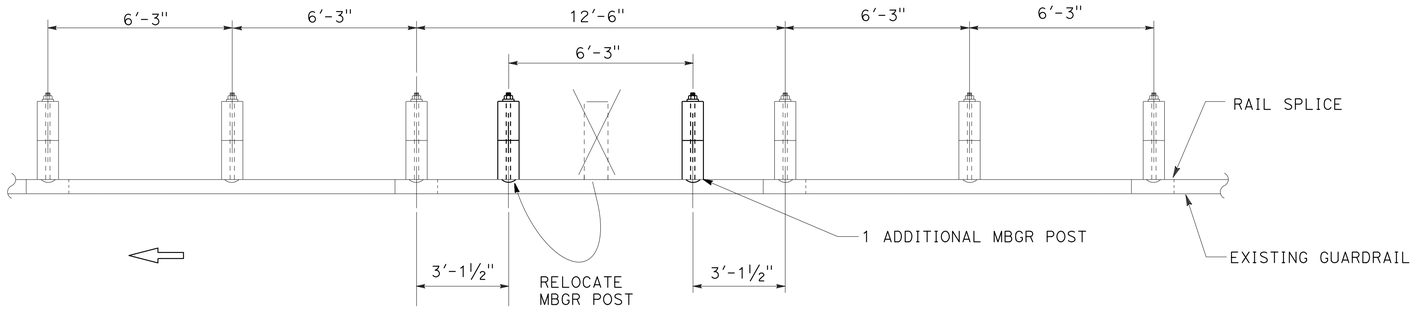

CASE 1

MOVE THE POST IN CONFLICT AND ADD ONE POST.
NO NESTED RAIL REQUIRED.

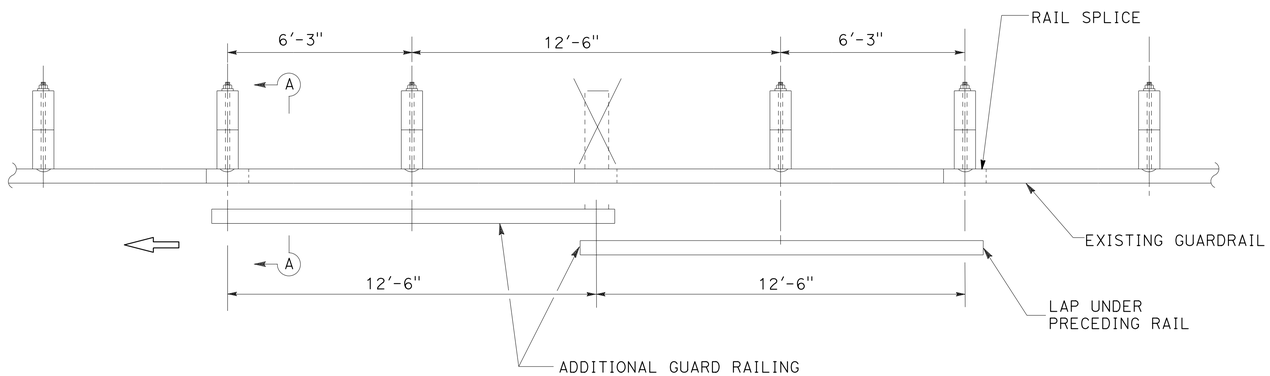

CASE 2

OMIT ONE POST IN CONFLICT AT JUNCTION OF TWO RAIL ELEMENTS.
NEST TWO LENGTHS OF RAIL.

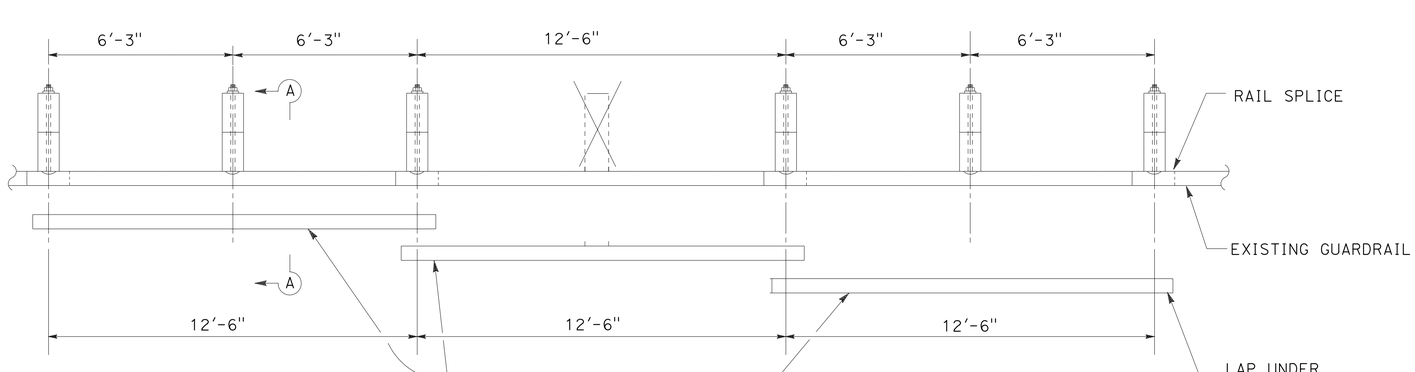

CASE 3

OMIT ONE POST IN CONFLICT AT CENTER OF ELEMENT.
NEST THREE LENGTHS OF RAIL.
SEE NOTE 3

LONG SPAN NESTED GUARD RAILING

LEGEND:

MBGR POST IN CONFLICT

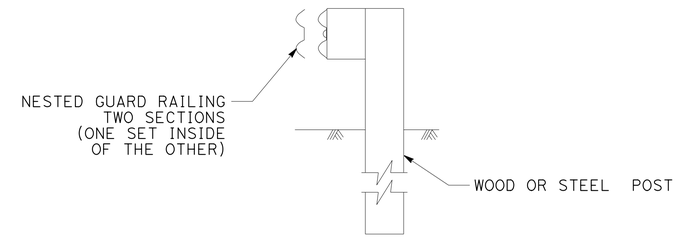

SECTION A-A

TYPICAL RAILING OVERLAP INSTALLATION AT POST

NOTES:

1. NEST ALL RAIL ELEMENTS AT EXISTING RAIL LAPS.
2. NESTED RAIL ELEMENTS MUST BE SUPPORTED BY A Min OF 2 POSTS EACH SIDE OF THE MISSING POST OR ADD ADDITIONAL LENGTH OF NESTED ELEMENTS.
3. USING CASE 3, A SECOND ADJACENT POST CAN BE REMOVED IF THE NESTED RAIL ELEMENTS ARE SUPPORTED BY A MIN OF 2 POSTS EACH SIDE OF THE MISSING POSTS. THE 2-POST OPTION USES CASE 3 BUT NOT SHOWN.
4. EXISTING UTILITY FACILITIES ARE NOT SHOWN ON THESE PLANS.

CONSTRUCTION DETAILS METAL BEAM GUARDRAILING REMOVE POST OPTIONS

NO SCALE

C-44

REVISED BY | DATE REVISED
JEANNIE STEFFAN | HEIDI BORDERS
CALCULATED-DESIGNED BY | CHECKED BY
FUNCTIONAL SUPERVISOR: JULIE CASEY
STATE OF CALIFORNIA - DEPARTMENT OF TRANSPORTATION
Caltrans DESIGN
P:\proj1\02\3E770_plans\pse\23e770ga044.dgn

LAST REVISION 11-25-14 | DATE PLOTTED => 15-JAN-2015 | TIME PLOTTED => 16:08

Dist	COUNTY	ROUTE	POST MILES TOTAL PROJECT	SHEET No.	TOTAL SHEETS
02	Tri	299	36.9/53.5	49	165

Heidi Borders 11-25-14
REGISTERED CIVIL ENGINEER DATE

11-26-14
PLANS APPROVAL DATE

REGISTERED PROFESSIONAL ENGINEER
HEIDI E. BORDERS
No. C64194
Exp. 6-30-15
CIVIL
STATE OF CALIFORNIA

THE STATE OF CALIFORNIA OR ITS OFFICERS OR AGENTS SHALL NOT BE RESPONSIBLE FOR THE ACCURACY OR COMPLETENESS OF SCANNED COPIES OF THIS PLAN SHEET.

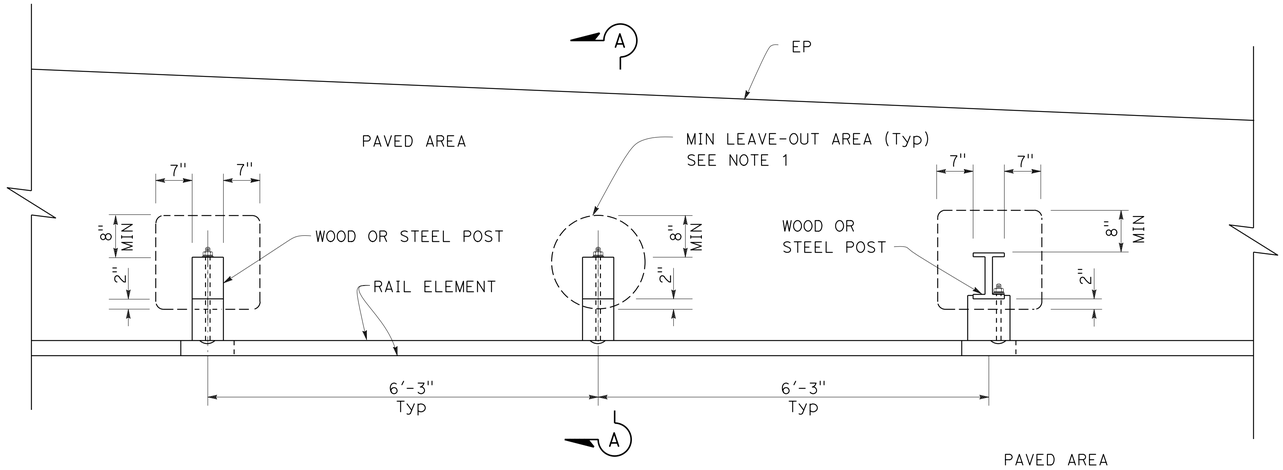

PLAN

NOTES:

1. LEAVE-OUT AREA MAY BE RETANGULAR OR ROUND, BUT THE CLEARANCES SHOWN MUST BE MAINTAINED.
2. FOR WOOD POST SIZES, SEE RSP A77N1.
3. FOR STEEL POST SIZES, SEE RSP A77N2.
4. FOR DETAILS NOT SHOWN, SEE C-42.
5. USE MAX 120 PSI COMPRESSIVE STRENGTH FOR CONTROLLED LOW STRENGTH MATERIAL

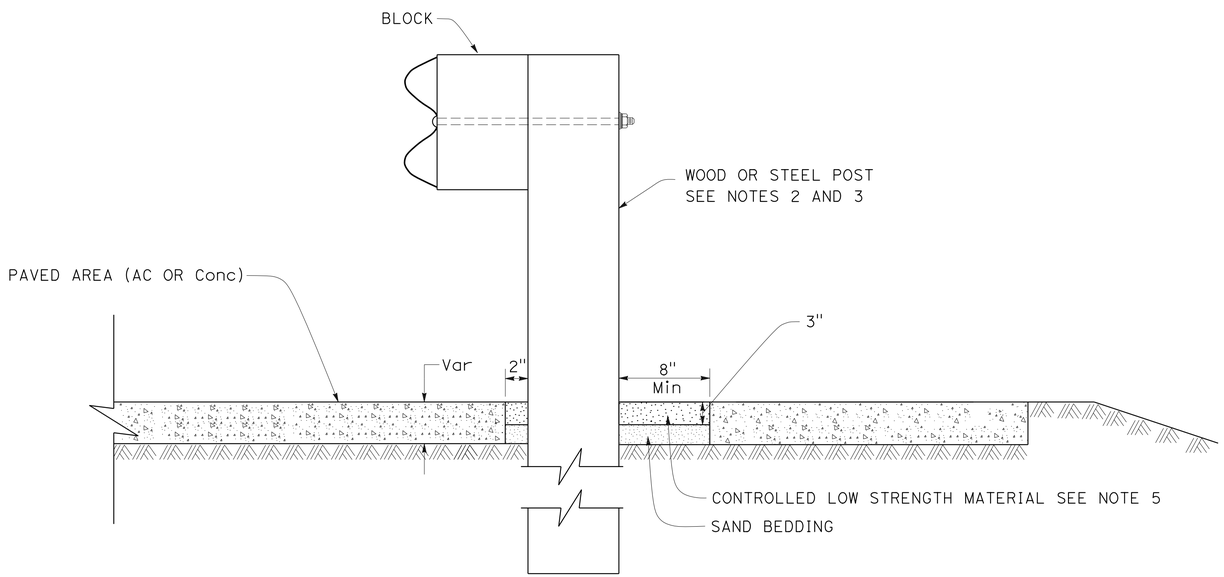

SECTION A-A

CONSTRUCTION DETAILS
METAL BEAM GUARDRAILING
TYPICAL LEAVE-OUT AREA
THROUGH EXISTING PAVEMENT

NO SCALE

C-45

REVISED BY | DATE REVISED
JEANNIE STEFFAN | HEIDI BORDERS
CALCULATED-DESIGNED BY | CHECKED BY
FUNCTIONAL SUPERVISOR
JULIE CASEY

STATE OF CALIFORNIA - DEPARTMENT OF TRANSPORTATION
Caltrans
DESIGN

P:\proj1\02\3E770_plans\pse\23e770ga045.dgn

LAST REVISION 11-25-14 | DATE PLOTTED => 15-JAN-2015 | TIME PLOTTED => 16:08

Dist	COUNTY	ROUTE	POST MILES TOTAL PROJECT	SHEET No.	TOTAL SHEETS
02	Tri	299	36.9/53.5	50	165

Heidi Borders 11-25-14
REGISTERED CIVIL ENGINEER DATE

11-26-14
PLANS APPROVAL DATE

REGISTERED PROFESSIONAL ENGINEER HEIDI E. BORDERS No. C64194 Exp. 6-30-15 CIVIL STATE OF CALIFORNIA

THE STATE OF CALIFORNIA OR ITS OFFICERS OR AGENTS SHALL NOT BE RESPONSIBLE FOR THE ACCURACY OR COMPLETENESS OF SCANNED COPIES OF THIS PLAN SHEET.

NOTES:

1. INTERMEDIATE ANCHOR ASSEMBLY IS TYPICALLY USED AT END OF SHOP BENT GUARDRAILING TO PROVIDE TENSION FOR THE NON SHOP BENT GUARDRAILING.

   FOR DETAILS NOT SHOWN OF THE ANCHOR PLATE AND ¾" CABLE, SEE RSP A77S3.

2. A 6'-0" LENGTH STEEL FOUNDATION TUBE, TS 8 x 6 x 3/16, WITHOUT A SOIL PLATE, MAY BE FURNISHED AND INSTALLED IN PLACE OF THE 4'-6" LENGTH STEEL FOUNDATION TUBE AND SOIL
3. PLATE SHOWN. MINIMUM EMBEDMENT OF THE 6'-0" LENGTH TUBE SHALL BE 5'-9". A ⅝" Ø HEX HEAD BOLT AND NUT SHALL BE INSTALLED IN THE HOLE IN THE 6'=0" LENGTH TUBE TO KEEP THE WOOD POST FROM DROPPING INTO THE TUBE.

4. INSTALL LINE POST, STEEL FOUNDATION TUBE, AND SOIL PLATE IN SOIL.

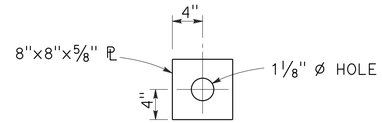

DETAIL A
CABLE CONNECTION END PLATE

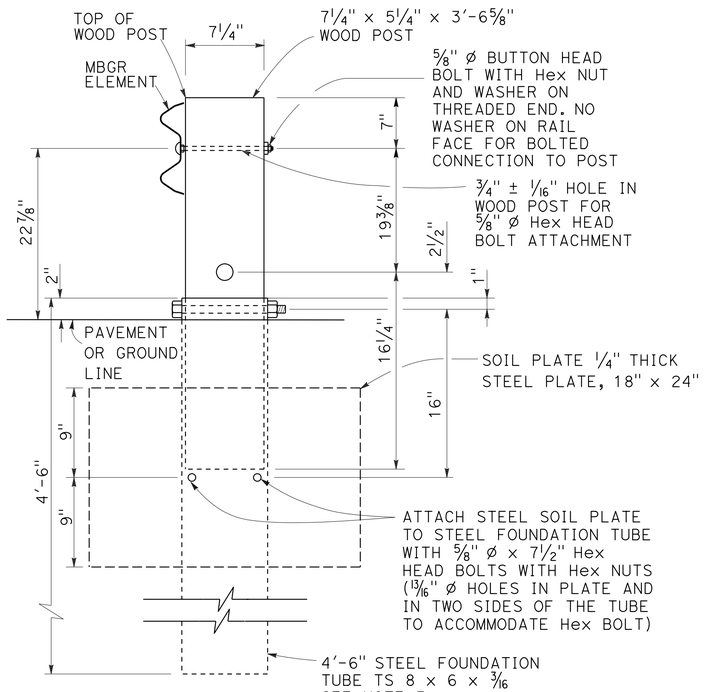

SECTION A-A

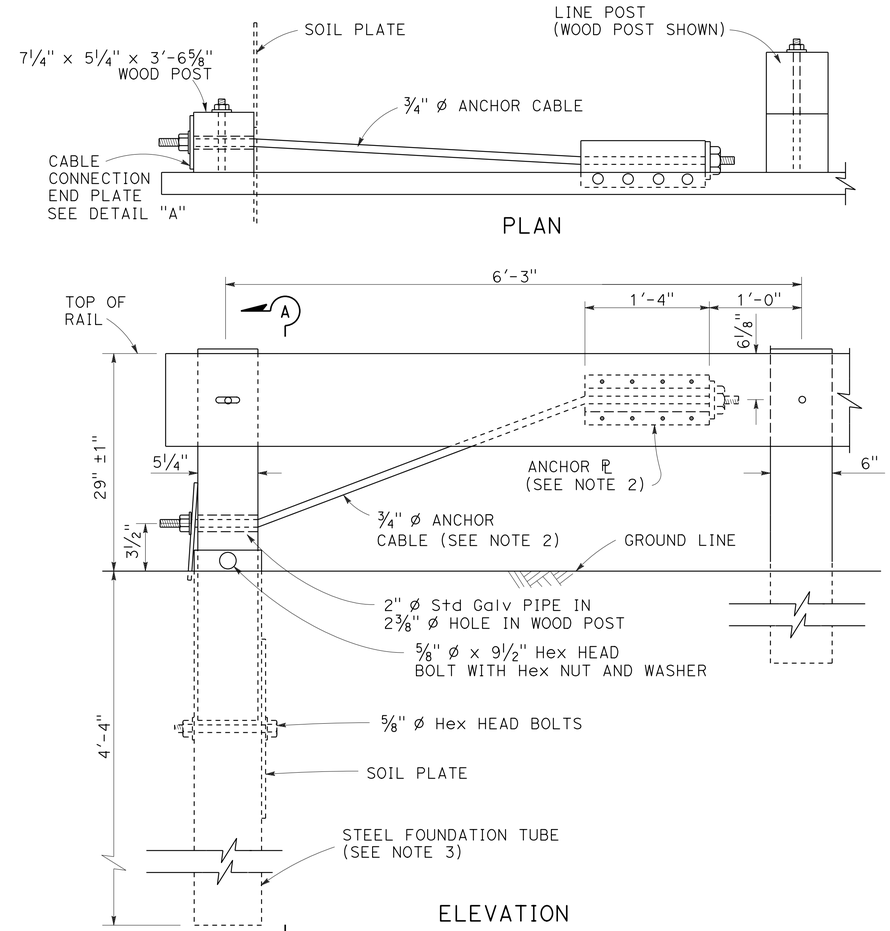

END ANCHOR ASSEMBLY (TYPE SFT)

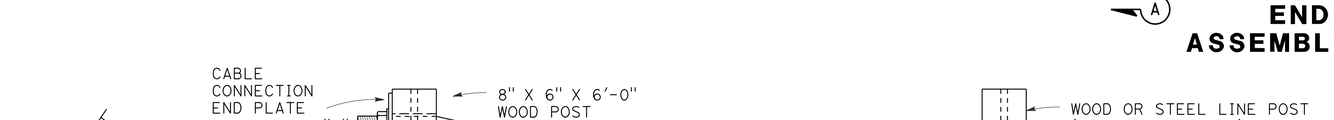

PLAN

INTERMEDIATE ANCHOR ASSEMBLY

SEE NOTE 2

CONSTRUCTION DETAILS
METAL BEAM GUARDRAILING
RAIL TENSIONING ASSEMBLY
END ANCHOR ASSEMBLY

NO SCALE

C-46

REVISED BY	DATE REVISED
JEANNIE STEFFAN	HEIDI BORDERS
CALCULATED-DESIGNED BY	CHECKED BY
FUNCTIONAL SUPERVISOR	JULIE CASEY

STATE OF CALIFORNIA - DEPARTMENT OF TRANSPORTATION
Caltrans® DESIGN

P:\proj\02\3E770_plans\pse\23e770ga046.dgn

LAST REVISION 11-25-14 | DATE PLOTTED => 15-JAN-2015 | TIME PLOTTED => 16:08

Dist	COUNTY	ROUTE	POST MILES TOTAL PROJECT	SHEET No.	TOTAL SHEETS
02	Tri	299	36.9/53.5	51	165

Heidi Borders 11-25-14
REGISTERED CIVIL ENGINEER DATE

11-26-14
PLANS APPROVAL DATE

REGISTERED PROFESSIONAL ENGINEER
HEIDI E. BORDERS
No. C64194
Exp. 6-30-15
CIVIL
STATE OF CALIFORNIA

THE STATE OF CALIFORNIA OR ITS OFFICERS OR AGENTS SHALL NOT BE RESPONSIBLE FOR THE ACCURACY OR COMPLETENESS OF SCANNED COPIES OF THIS PLAN SHEET.

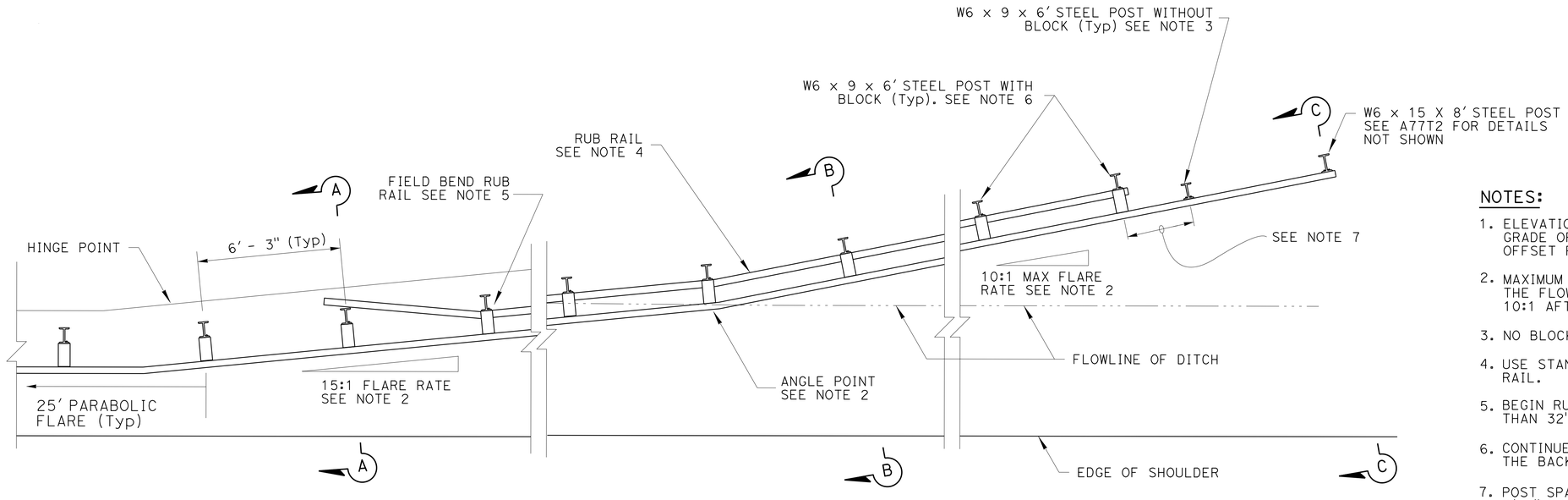

PLAN

NOTES:

1. ELEVATION OF THE GUARDRAIL SHOULD FOLLOW THE PROFILE GRADE OF THE SHOULDER AND BE NO LOWER THAN 10% OF THE OFFSET FROM THE SHOULDER TO THE RAIL. SEE SECTION C-C.
2. MAXIMUM FLARE RATE OF GUARDRAIL FROM THE SHOULDER TO THE FLOWLINE IS 15:1. FLARE RATE CAN BE INCREASED UP TO 10:1 AFTER CROSSING THE DITCH FLOWLINE.
3. NO BLOCKS ON POSTS WHERE BLOCKS ARE IN CONTACT WITH SOIL.
4. USE STANDARD GUARDRAIL ELEMENTS WITH NO BLOCKS FOR RUB RAIL.
5. BEGIN RUB RAIL WHEN THE HEIGHT OF THE GUARDRAIL IS MORE THAN 32" ABOVE THE GROUND DIRECTLY BELOW THE RAIL.
6. CONTINUE RUB RAIL UNTIL TOP OF RUB RAIL BURIED IN THE BACKSLOPE.
7. POST SPACING AND ELEMENT SPLICES SHOWN FOR MGS. MAINTAIN 6'-3" SPACING AND SPLICE ELEMENTS AT POSTS FOR MBGR.
8. THE BURIED POST END ANCHOR SHOULD BE INSTALLED IN A NON-TRAVERSABLE SLOPE.

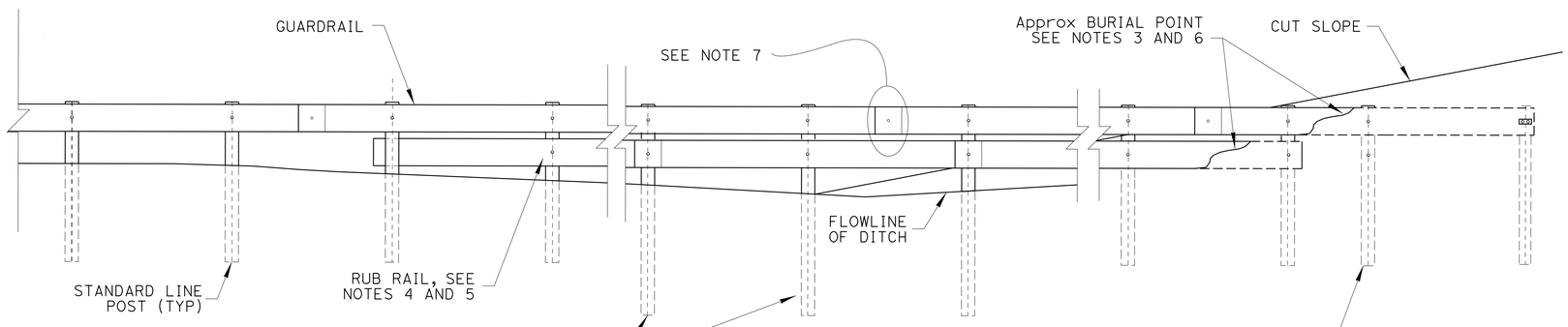

ELEVATION
(PROFILE ALONG RAIL)

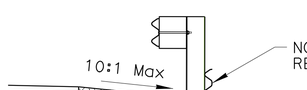

SECTION A-A

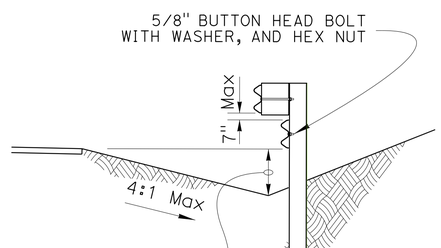

SECTION B-B

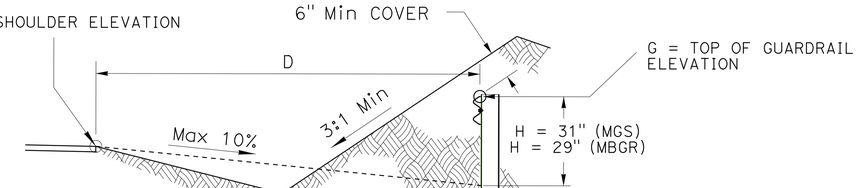

SECTION C-C

CONSTRUCTON DETAILS GUARDRAIL MODIFIED BURIED POST END ANCHOR

NO SCALE

C-47

REVISED BY	DATE REVISED

CALCULATED-DESIGNED BY: JEANNIE STEFFAN
CHECKED BY: HEIDI BORDERS
FUNCTIONAL SUPERVISOR: JULIE CASEY

STATE OF CALIFORNIA - DEPARTMENT OF TRANSPORTATION
Caltrans
DESIGN

P:\proj1\02\3E770_plans\pse\23e770ga047.dgn

LAST REVISION 11-25-14 | DATE PLOTTED => 15-JAN-2015 | TIME PLOTTED => 16:08

Dist	COUNTY	ROUTE	POST MILES TOTAL PROJECT	SHEET No.	TOTAL SHEETS
02	Tri	299	36.9/53.5	52	165

Heidi Borders 11-25-14
REGISTERED CIVIL ENGINEER DATE

11-26-14
PLANS APPROVAL DATE

REGISTERED PROFESSIONAL ENGINEER HEIDI E. BORDERS No. C64194 Exp. 6-30-15 CIVIL STATE OF CALIFORNIA

THE STATE OF CALIFORNIA OR ITS OFFICERS OR AGENTS SHALL NOT BE RESPONSIBLE FOR THE ACCURACY OR COMPLETENESS OF SCANNED COPIES OF THIS PLAN SHEET.

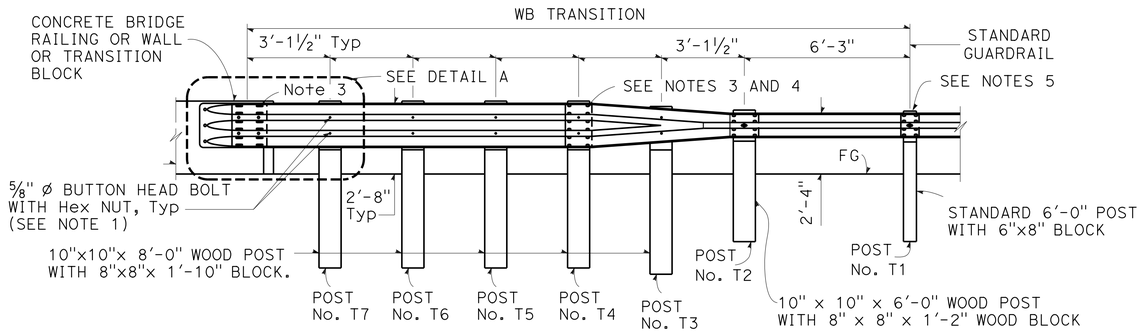

ELEVATION

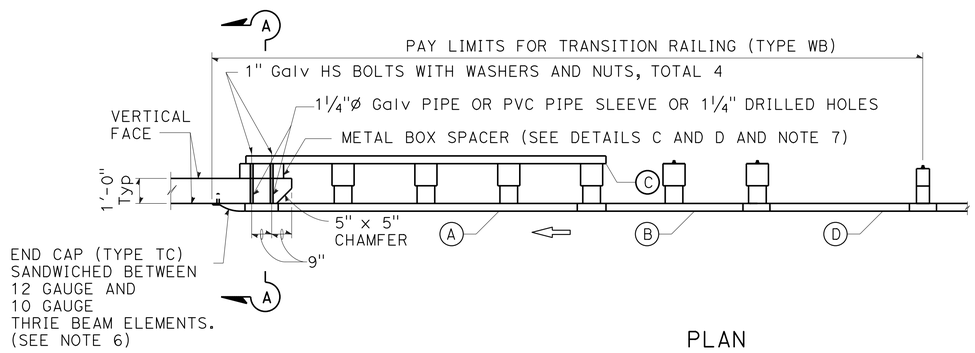

PLAN

TRANSITION RAILING (TYPE WB)

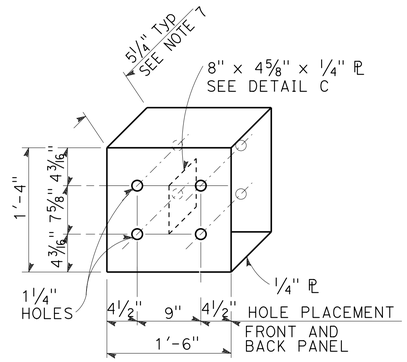

DETAIL D
METAL BOX SPACER

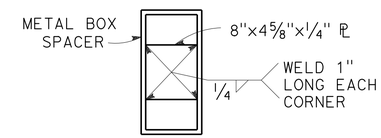

DETAIL C

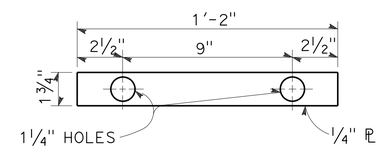

DETAIL B
PLATE 'A'

NOTES:

1. USE ⅝"* BUTTON HEAD BOLTS AND HEX NUTS FOR CONNECTIONS TO POSTS.
2. TAPER THE TOP OF THE ANCHOR BLOCK AT 4:1 TO 1" ABOVE TOP OF RAIL.
3. EXTERIOR SPLICE BOLT HOLES FOR RAIL ELEMENT SPLICES AT POST NO. T4 AND THE CONNECTION TO THE CONCRETE BARRIER OR RAILING SHALL BE THE STANDARD 13/16" X 1⅛" SLOT SIZE. INTERIOR SPLICE BOLT HOLES AT THESE LOCATIONS MAY BE INCREASED UP TO 1¼"*. ONLY THE TOP 4 AND THE BOTTOM 4 SPLICE BOLTS WITH WASHERS AND NUTS ARE REQUIRED FOR RAIL SPLICES AT POST NO. T4 AND THE TOP 2 AND THE BOTTOM 2 SPLICE BOLTS ARE REQUIRED AT THE CONNECTION TO THE CONCRETE BARRIER OR RAILING.
4. THE TOP ELEVATION OF POSTS NO. T2 THROUGH NO. T7 SHALL NOT PROJECT MORE THAN 1" ABOVE THE TOP ELEVATION OF THE RAIL ELEMENT.
5. THE GUARD RAILING CONNECTED TO TRANSITION RAILING (TYPE WB) WILL BE A STANDARD RAILING SECTION OF METAL BEAM GUARD RAILING WITH HEIGHT TRANSITION RATIO OF 120:1.
6. END CAP MAY BE INSTALLED OVER 12 GAUGE AND 10 GAUGE THRIE BEAM ELEMENTS WHERE TRANSITION RAILING IS INSTALLED ON THE DEPARTURE END OF BRIDGE RAILING.
7. THE DEPTH OF THE METAL BOX SPACER VARIES FROM 5⅛" TO 1½" AND IS DEPENDENT ON THE WIDTH OF THE CONCRETE RAILING OR WALL. THE COMBINED DIMENSION FOR THE DEPTH OF THE METAL BOX SPACER PLUS THE WIDTH OF RAILING OR WALL SHOULD BE 17⅛".
8. FOR END CAP DETAILS NOT SHOWN, SEE RSP A77U4.
9. EXISTING UTILITY FACILITIES ARE NOT SHOWN ON THESE PLANS

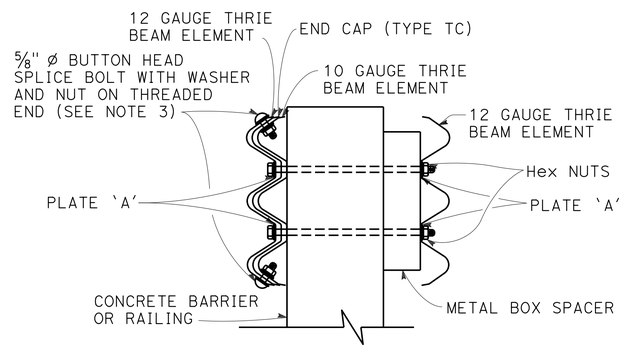

SECTION A-A

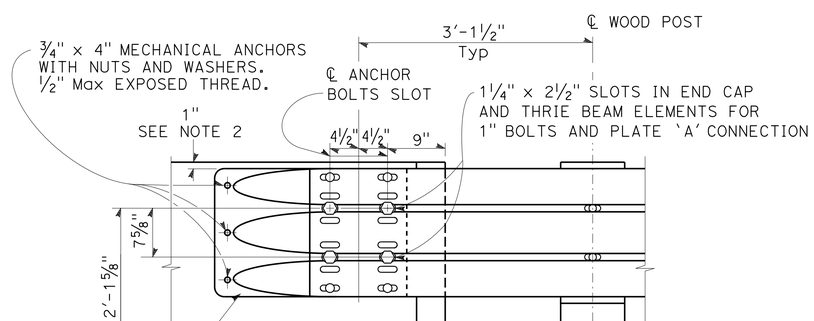

DETAIL A
END CAP (TYPE TC)
SEE NOTE 8

LEGEND

(A) NESTED THRIE BEAM ELEMENTS (ONE 12 GAUGE ELEMENT NESTED OVER ONE 10 GAUGE ELEMENT).

(B) ONE 10 GAUGE "W" BEAM TO THRIE BEAM ELEMENT.

(C) ONE 12 GAUGE THRIE BEAM ELEMENT.

(D) ONE 10 GAUGE "W" BEAM RAIL ELEMENT (7'-3½"LENGTH)

10 GAUGE = 0.138" THICK
12 GAUGE = 0.108" THICK

CONSTRUCTION DETAILS GUARDRAILING TRANSITION (TYPE WB)

NO SCALE

C-48

REVISED BY | DATE REVISED
JEANNIE STEFFAN | HEIDI BORDERS
CALCULATED-DESIGNED BY | CHECKED BY
FUNCTIONAL SUPERVISOR: JULIE CASEY
STATE OF CALIFORNIA - DEPARTMENT OF TRANSPORTATION
Caltrans DESIGN

P:\proj1\02\3E770_plans\pse\23e770ga048.dgn

LAST REVISION 11-25-14 | DATE PLOTTED => 15-JAN-2015 | TIME PLOTTED => 16:08

Dist	COUNTY	ROUTE	POST MILES TOTAL PROJECT	SHEET No.	TOTAL SHEETS
02	Tri	299	36.9/53.5	53	165

Heidi Borders 11-25-14
REGISTERED CIVIL ENGINEER DATE

11-26-14
PLANS APPROVAL DATE

REGISTERED PROFESSIONAL ENGINEER
HEIDI E. BORDERS
No. C64194
Exp. 6-30-15
CIVIL
STATE OF CALIFORNIA

THE STATE OF CALIFORNIA OR ITS OFFICERS OR AGENTS SHALL NOT BE RESPONSIBLE FOR THE ACCURACY OR COMPLETENESS OF SCANNED COPIES OF THIS PLAN SHEET.

NOTES:

1. Max 2 EXISTING POSTS MAY BE REMOVED.
2. GUARDRAIL ELEMENT ON BACK OF POST NOT REQUIRED IF NEW TRANSITION IS COMPLETED WITHIN 20 WORKING DAYS.
3. MAX 2" OF ADDITIONAL BLOCKING MAY BE ADDED BETWEEN RAIL ELEMENT AND EXISTING POST OR ANCHOR BLOCK TO ACCOMMODATE FORM WORK.
4. ATTACH END CAP FLUSH TO EXISTING ANCHOR BLOCK WITHIN CLEAR RECOVERY ZONE FOR OPPOSING TRAFFIC.
5. USE 2 EA x 1" HIGH STRENGTH THROUGH BOLTS TO ATTACH RAILING TO EXISTING ANCHOR BLOCK. USE EXISTING ℙ WASHERS FOR CONNECTION.

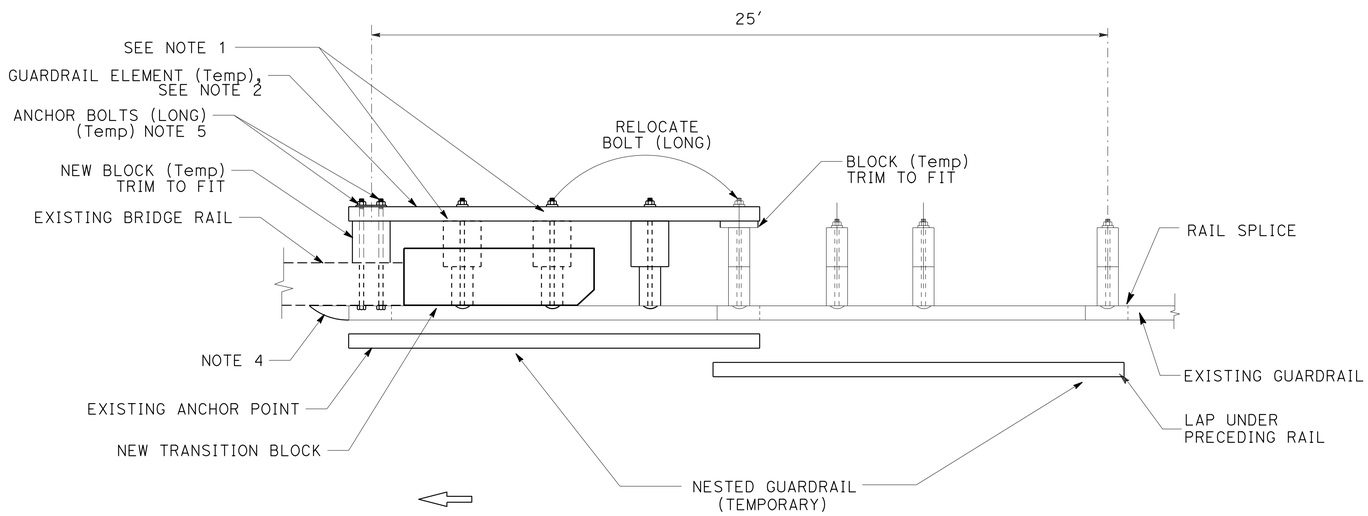

TEMPORARY NESTED GUARDRAIL AT TRANSITION BLOCK

CONSTRUCTION DETAILS
METAL BEAM GUARDRAILING
TEMPORARY TRANSITION

NO SCALE

C-49

REVISED BY	DATE REVISED

CALCULATED-DESIGNED BY	CHECKED BY
JEANNIE STEFFAN	HEIDI BORDERS

FUNCTIONAL SUPERVISOR: JULIE CASEY

STATE OF CALIFORNIA - DEPARTMENT OF TRANSPORTATION
Caltrans DESIGN

P:\proj1\02\3E770_plans\pse\23e770ga049.dgn

LAST REVISION 11-25-14 | DATE PLOTTED => 15-JAN-2015 | TIME PLOTTED => 16:08

Dist	COUNTY	ROUTE	POST MILES TOTAL PROJECT	SHEET No.	TOTAL SHEETS
02	Tri	299	36.9/53.5	54	165

Heidi Borders 11-25-14
REGISTERED CIVIL ENGINEER DATE

11-26-14
PLANS APPROVAL DATE

REGISTERED PROFESSIONAL ENGINEER HEIDI E. BORDERS No. C64194 Exp. 6-30-15 CIVIL STATE OF CALIFORNIA

THE STATE OF CALIFORNIA OR ITS OFFICERS OR AGENTS SHALL NOT BE RESPONSIBLE FOR THE ACCURACY OR COMPLETENESS OF SCANNED COPIES OF THIS PLAN SHEET.

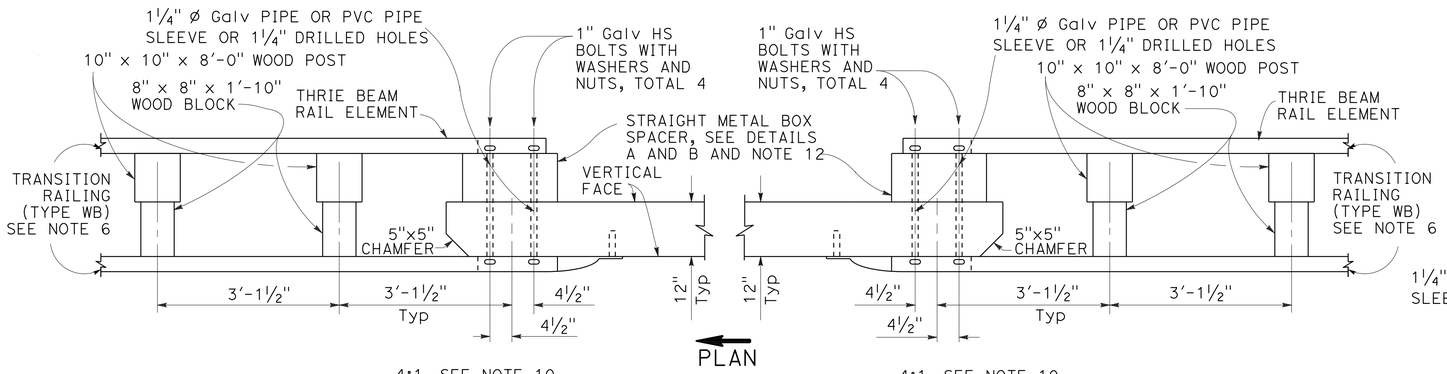

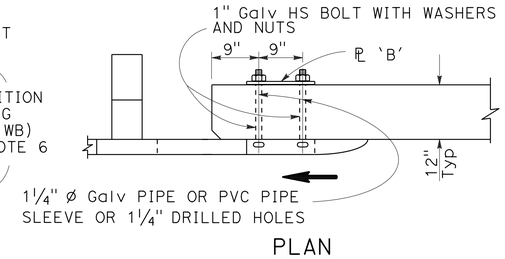

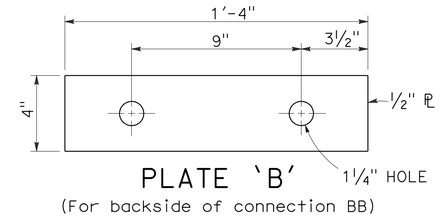

PLATE 'B'
(For backside of connection BB)

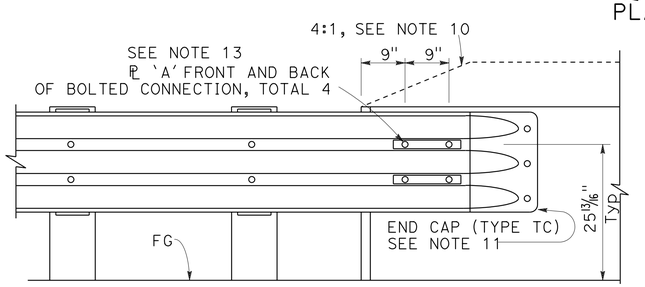

CONNECTION DETAIL CC
See Note 9
ELEVATION

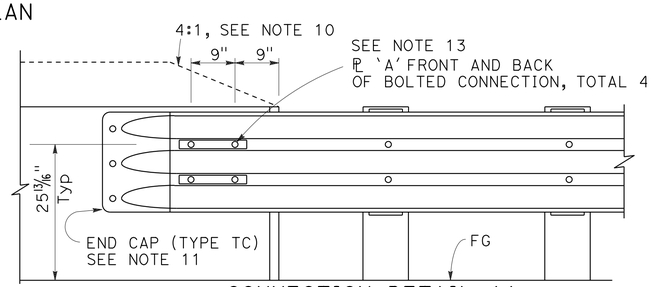

CONNECTION DETAIL AA
See Note 7
ELEVATION

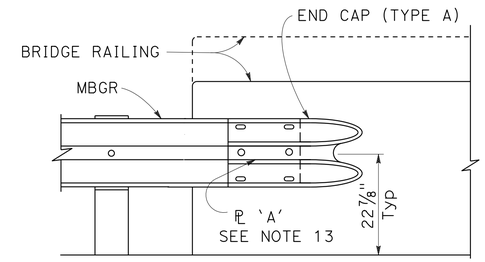

CONNECTION DETAIL BB
See Note 8
ELEVATION

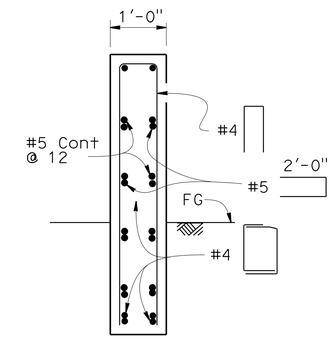

SECTION B-B
NOTE: DRILL AND BOND DOWELS NOT SHOWN

GUARDRAILING CONNECTION TO BRIDGE RAILING WITHOUT SIDEWALK

NOTES:

1. THE CONTRACTOR SHALL VERIFY ALL CONTROLLING FIELD DIMENSIONS BEFORE ORDERING OR FABRICATING ANY MATERIAL.
2. TRANSITION BLOCK SHALL MATCH EXISTING BRIDGE RAIL CROSS SECTION AT SECTION A-A.
3. FOR GUARDRAIL CONNECTION DETAILS TO BRIDGES NOT SHOWN, SEE RSP A77U1 AND A77U2
4. ADDITIONAL DETAILS OF POSTS, BLOCKS, AND HARDWARE ARE SHOWN ON RSP A77M1, A77N1, AND A77N2
5. DIRECTION OF ADJACENT TRAFFIC INDICATED BY ➡ .
6. FOR ADDITIONAL DETAILS OF TRANSITION RAILING (TYPE WB), SEE C-48.
7. FOR TYPICAL USE OF CONNECTION DETAIL AA, SEE LAYOUT TYPES 12A AND 12B ON RSP A77Q1, LAYOUT TYPES 12C AND 12D ON RSP A77Q2, AND LAYOUT TYPE 12E ON RSP A77Q3.
8. FOR TYPICAL USE OF CONNECTION DETAIL BB, SEE LAYOUT TUPE 12D (STRUCTURE DEPARTURE RAILING CONNECTION) ON RSP A77Q2 AND LAYOUT TYPE 12DD ON RSP A77Q5.
9. FOR TYPICAL USE OF CONNECTION DETAIL CC, SEE LAYOUT TYPES 12AA AND 12BB ON RSP A77Q4 AND LAYOUT TYPE 12CC ON RSP A77Q5.
10. WHERE THE HEIGHT OF THE BRIDGE RAILING EXCEEDS THE HEIGHT OF THE THRIE BEAM RAILING BY MORE THAN 1" AT CONNECTION DETAIL AA, TAPER THE TOP OF THE END OF BRIDGE RAILING AT 4:1 TO MATCH THE TOP ELEVATION OF THE THRIE BEAM RAIL.
11. FOR DETAILS OF END CAP (TYPE TC), SEE C-48.
12. FOR DETAILS OF STRAIGHT METAL BOX SPACER, SEE C-48.
13. FOR DETAILS OF PLATE "A", SEE C-48.

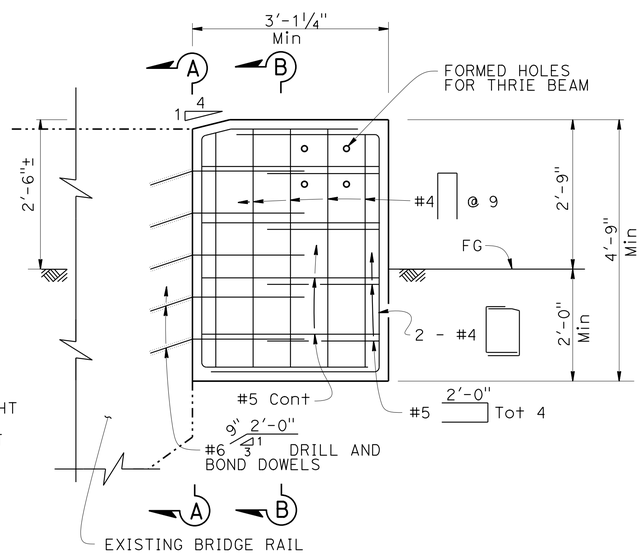

ELEVATION
PM 36.93

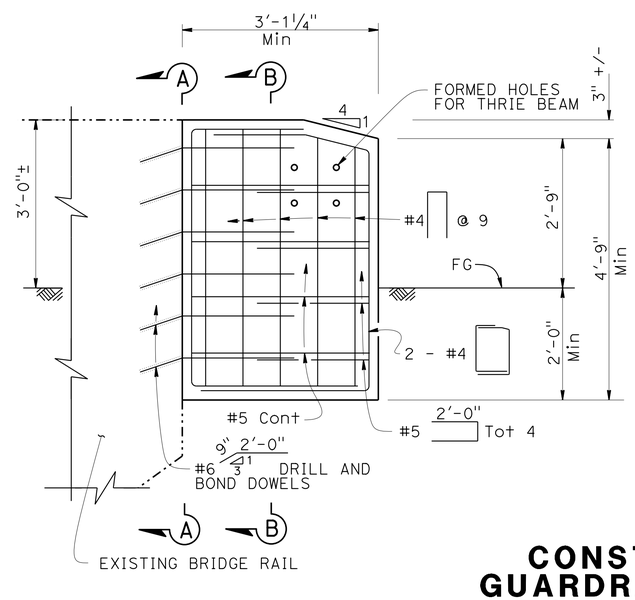

ELEVATION
PM 36.93, 51.17, 51.18, 51.19

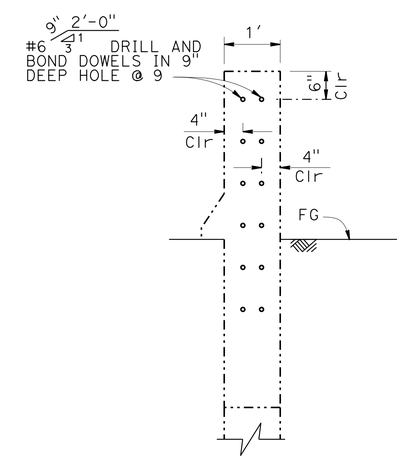

SECTION A-A

TRANSITION BLOCK DETAILS

CONSTRUCTION DETAILS GUARDRAILING CONNECTIONS TO BRIDGE RAILING AND TRANSITION BLOCKS

NO SCALE

C-50

STATE OF CALIFORNIA - DEPARTMENT OF TRANSPORTATION
Caltrans DESIGN
FUNCTIONAL SUPERVISOR: JULIE CASEY
CALCULATED-DESIGNED BY: JEANNIE STEFFAN
CHECKED BY: HEIDI BORDERS
REVISED BY / DATE REVISED

P:\proj1\02\3E770_plans\pse\23e770ga050.dgn

LAST REVISION 11-25-14 | DATE PLOTTED => 15-JAN-2015 | TIME PLOTTED => 16:08

Dist	COUNTY	ROUTE	POST MILES TOTAL PROJECT	SHEET No.	TOTAL SHEETS
02	Tri	299	36.9/53.5	55	165

Heidi Borders 11-25-14
REGISTERED CIVIL ENGINEER DATE

11-26-14
PLANS APPROVAL DATE

REGISTERED PROFESSIONAL ENGINEER
HEIDI E. BORDERS
No. C64194
Exp. 6-30-15
CIVIL
STATE OF CALIFORNIA

THE STATE OF CALIFORNIA OR ITS OFFICERS OR AGENTS SHALL NOT BE RESPONSIBLE FOR THE ACCURACY OR COMPLETENESS OF SCANNED COPIES OF THIS PLAN SHEET.

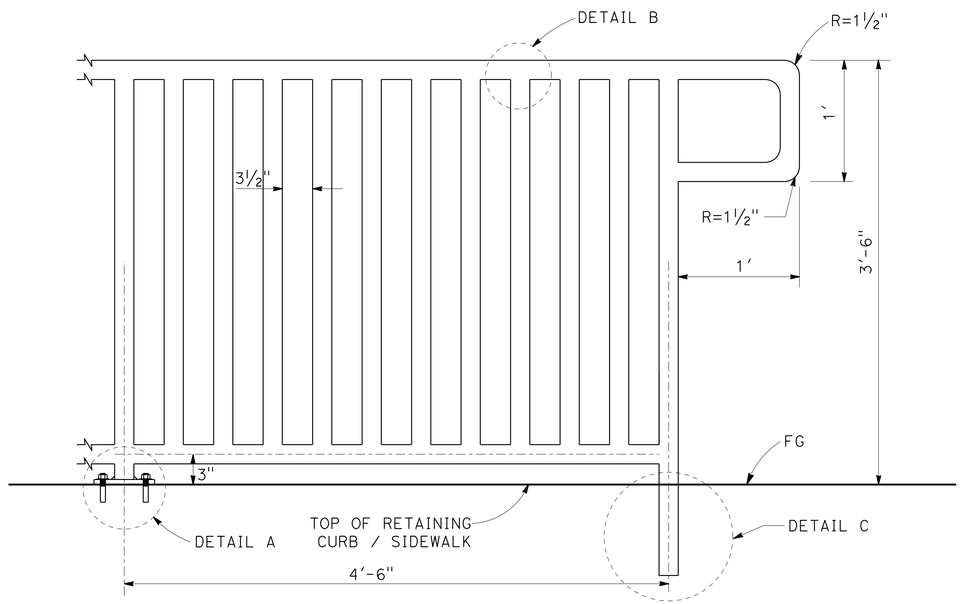

ELEVATION
HAND RAILING

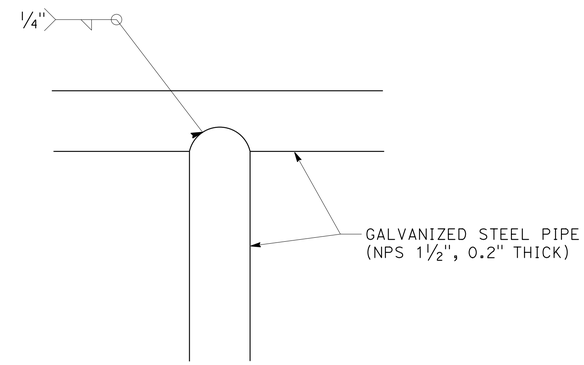

DETAIL B
(TYPICAL ALL CONNECTIONS)

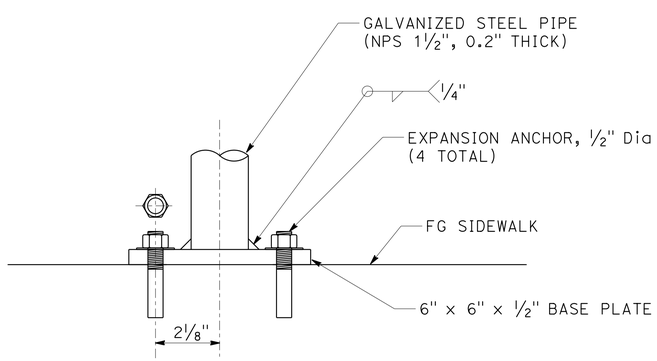

ELEVATION
DETAIL A
(TYPICAL Exist & NEW SIDEWALK CONNECTIONS)

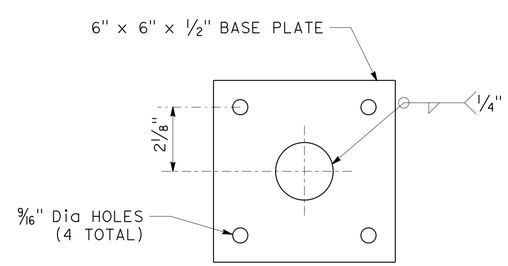

PLAN
6" x 6" x ½" BASE PLATE

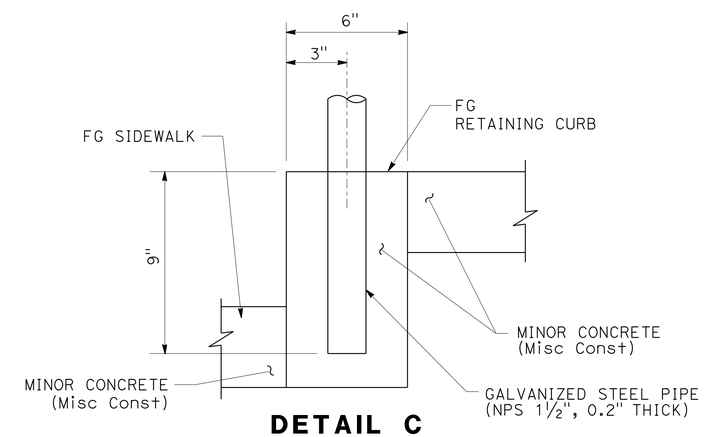

DETAIL C
(TYPICAL RETAINING CURB CONNECTIONS)

CONSTRUCTION DETAILS
NO SCALE

C-51

REVISED BY	DATE REVISED
JEANNIE STEFFAN	HEIDI BORDERS
CALCULATED-DESIGNED BY	CHECKED BY
FUNCTIONAL SUPERVISOR	JULIE CASEY

STATE OF CALIFORNIA - DEPARTMENT OF TRANSPORTATION
Caltrans® DESIGN

P:\proj1\02\3E770_plans\pse\23e770ga051.dgn

LAST REVISION 11-25-14 | DATE PLOTTED => 15-JAN-2015 | TIME PLOTTED => 16:09

Dist	COUNTY	ROUTE	POST MILES TOTAL PROJECT	SHEET No.	TOTAL SHEETS
02	Tri	299	36.9/53.5	56	165

Heidi Borders 11-25-14
REGISTERED CIVIL ENGINEER DATE

11-26-14
PLANS APPROVAL DATE

REGISTERED PROFESSIONAL ENGINEER
HEIDI E. BORDERS
No. C64194
Exp. 6-30-15
CIVIL
STATE OF CALIFORNIA

THE STATE OF CALIFORNIA OR ITS OFFICERS OR AGENTS SHALL NOT BE RESPONSIBLE FOR THE ACCURACY OR COMPLETENESS OF SCANNED COPIES OF THIS PLAN SHEET.

NOTES:

1. GRIND EXISTING SURFACES TO ACCOMODATE A MINIMUM TAPER THICKNESS OF 0.10′ WHEN EITHER:
   A. HMA MATERIAL SUCH AS RUBBERIZED, POLYMER MODIFIED OR OPEN GRADED IS UNSUITABLE FOR RAKING TO A MAXIMUM 0.02′ THICKNESS AT THE CONFORM.
   B. TEMPORARY TAPER WILL BE IN PLACE FOR MORE THAN 14 DAYS.
2. PERMANENT SURFACE MAY BE EXISTING OR NEW PAVEMENT.
3. ROADWAY SURFACE IS THE TOP OF EXISTING SURFACE OR THE TOP OF THE PLANED SURFACE.

LEGEND:

PAVING MATERIAL (TEMPORARY TAPER)

IF NECESSARY, COLD PLANE ASPHALT CONCRETE PAVEMENT AND PLACE HMA MATERIAL (SEE NOTE 1)

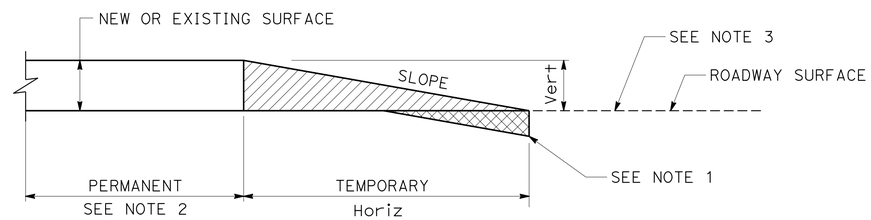

Vert	SLOPE RATIO Horiz/Vert
0-0.10′	70:1
GREATER THAN 0.10′	160:1

TYPICAL PAVING CONFORM FOR TEMPORARY CONSTRUCTION TAPERS

CONSTRUCTION DETAILS

NO SCALE

C-52

REVISED BY | DATE REVISED
JEANNIE STEFFAN | HEIDI BORDERS
CALCULATED-DESIGNED BY | CHECKED BY
FUNCTIONAL SUPERVISOR
JULIE CASEY

STATE OF CALIFORNIA - DEPARTMENT OF TRANSPORTATION
Caltrans
DESIGN

P:\proj\02\3E770_plans\pse\23e770ga052.dgn

LAST REVISION 11-25-14 | DATE PLOTTED => 15-JAN-2015 | TIME PLOTTED => 16:09

Dist	COUNTY	ROUTE	POST MILES TOTAL PROJECT	SHEET No.	TOTAL SHEETS
02	Tri	299	36.9/53.5	57	165

Heidi Borders 11-25-14
REGISTERED CIVIL ENGINEER DATE

11-26-14
PLANS APPROVAL DATE

REGISTERED PROFESSIONAL ENGINEER
HEIDI E. BORDERS
No. C64194
Exp. 6-30-15
CIVIL
STATE OF CALIFORNIA

THE STATE OF CALIFORNIA OR ITS OFFICERS OR AGENTS SHALL NOT BE RESPONSIBLE FOR THE ACCURACY OR COMPLETENESS OF SCANNED COPIES OF THIS PLAN SHEET.

NOTES:

1. FOR ACCURATE RIGHT OF WAY DATA, CONTACT RIGHT OF WAY ENGINEERING AT THE DISTRICT OFFICE.

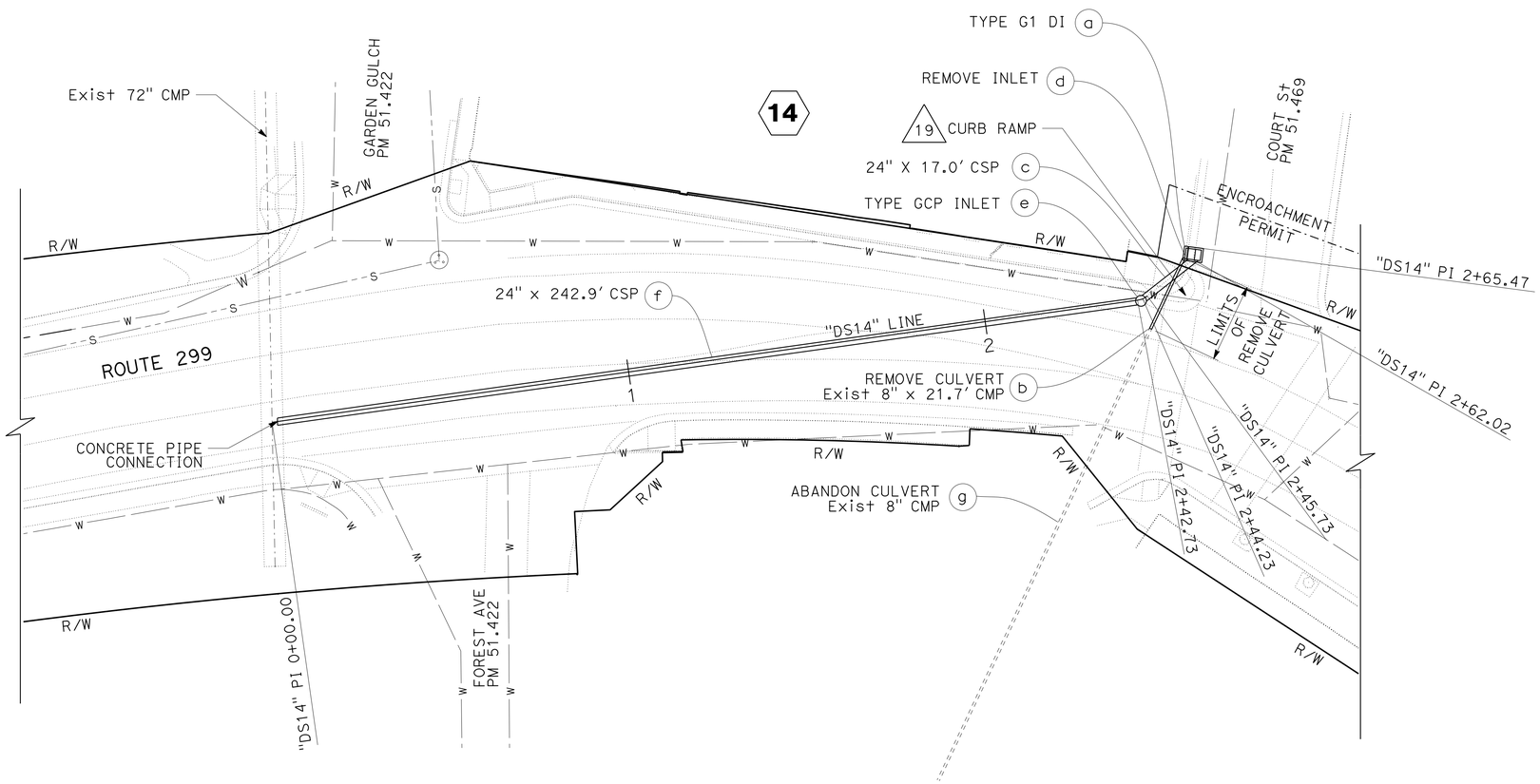

DRAINAGE PLAN

SCALE: 1" = 20'

D-1

APPROVED FOR DRAINAGE WORK ONLY

STATE OF CALIFORNIA - DEPARTMENT OF TRANSPORTATION
Caltrans
DESIGN

FUNCTIONAL SUPERVISOR: JULIE CASEY
CALCULATED-DESIGNED BY: JEANNIE STEFFAN
CHECKED BY: HEIDI BORDERS
REVISED BY
DATE REVISED

P:\proj1\02\3E770_plans\pse\23e770ia001.dgn

LAST REVISION 11-25-14
DATE PLOTTED => 15-JAN-2015
TIME PLOTTED => 16:09

BORDER LAST REVISED 7/2/2010
USERNAME => s123119
DGN FILE => 23e770ia001.dgn
RELATIVE BORDER SCALE IS IN INCHES 0 1 2 3
UNIT 0318
PROJECT NUMBER & PHASE: 02-1500-0046-1 EA: 3E7711

Dist	COUNTY	ROUTE	POST MILES TOTAL PROJECT	SHEET No.	TOTAL SHEETS
02	Tri	299	36.9/53.5	58	165

Heidi Borders 11-25-14
REGISTERED CIVIL ENGINEER DATE

11-26-14
PLANS APPROVAL DATE

REGISTERED PROFESSIONAL ENGINEER HEIDI E. BORDERS No. C64194 Exp. 6-30-15 CIVIL STATE OF CALIFORNIA

THE STATE OF CALIFORNIA OR ITS OFFICERS OR AGENTS SHALL NOT BE RESPONSIBLE FOR THE ACCURACY OR COMPLETENESS OF SCANNED COPIES OF THIS PLAN SHEET.

NOTE:

1. FOR ACCURATE RIGHT OF WAY DATA, CONTACT RIGHT OF WAY ENGINEERING AT THE DISTRICT OFFICE.

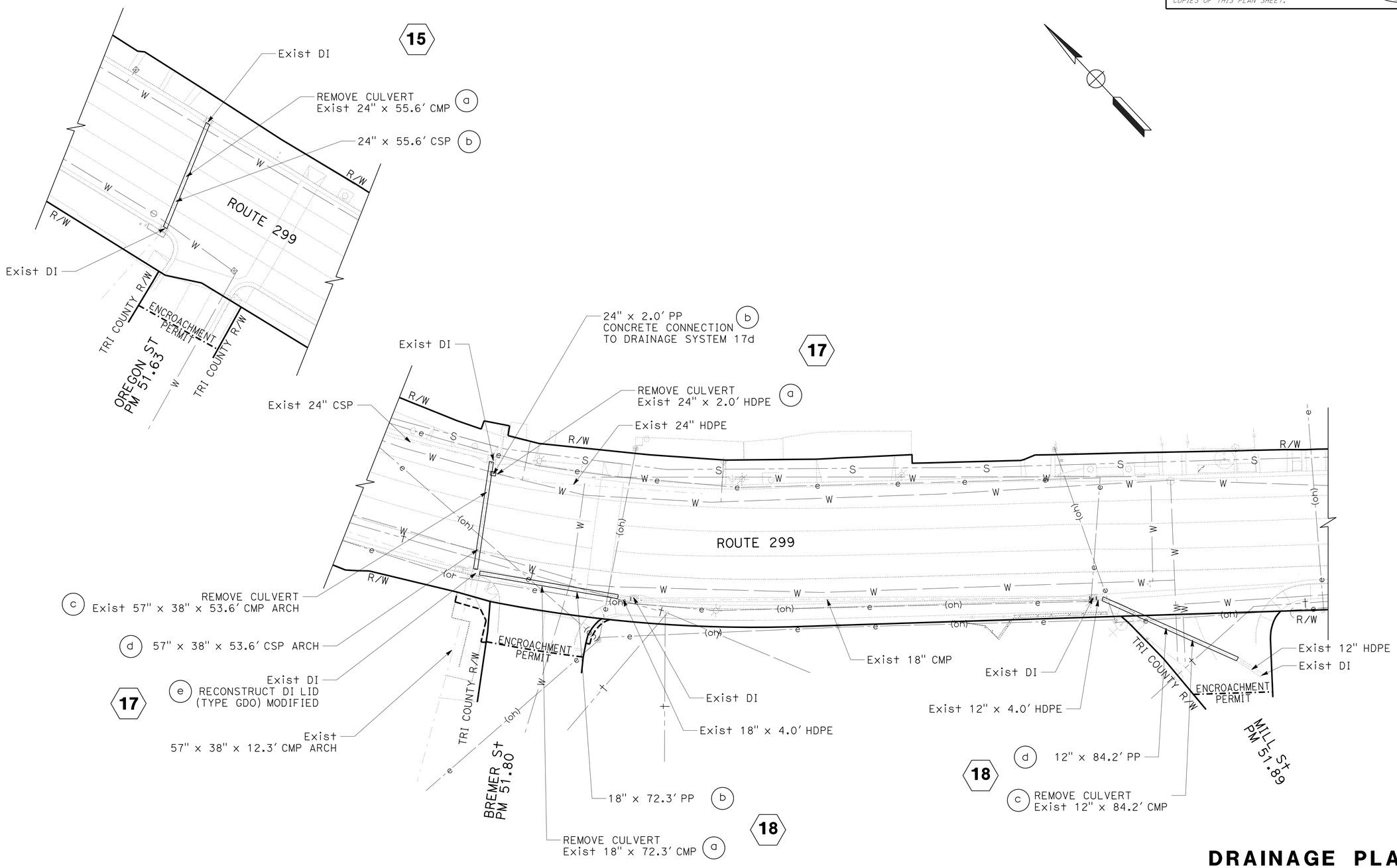

DRAINAGE PLAN

SCALE: 1" = 20'

D-2

APPROVED FOR DRAINAGE WORK ONLY

REVISED BY	DATE REVISED

CALCULATED-DESIGNED BY	CHECKED BY
JEANNIE STEFFAN	HEIDI BORDERS

FUNCTIONAL SUPERVISOR: JULIE CASEY

STATE OF CALIFORNIA - DEPARTMENT OF TRANSPORTATION

Caltrans® DESIGN

P:\proj1\02\3E770_plans\pse\23e770ia002.dgn

LAST REVISION 11-25-14 | DATE PLOTTED => 15-JAN-2015 | TIME PLOTTED => 16:09

Dist	COUNTY	ROUTE	POST MILES TOTAL PROJECT	SHEET No.	TOTAL SHEETS
02	Tri	299	36.9/53.5	59	165

Heidi Borders 11-25-14
REGISTERED CIVIL ENGINEER DATE

11-26-14
PLANS APPROVAL DATE

REGISTERED PROFESSIONAL ENGINEER
HEIDI E. BORDERS
No. C64194
Exp. 6-30-15
CIVIL
STATE OF CALIFORNIA

THE STATE OF CALIFORNIA OR ITS OFFICERS OR AGENTS SHALL NOT BE RESPONSIBLE FOR THE ACCURACY OR COMPLETENESS OF SCANNED COPIES OF THIS PLAN SHEET.

NOTE:

CULVERT ALIGNMENT IS PERPENDICULAR TO CENTERLINE UNLESS SKEW IS OTHERWISE SHOWN ON DRAINAGE PROFILE OR DRAINAGE LAYOUT.

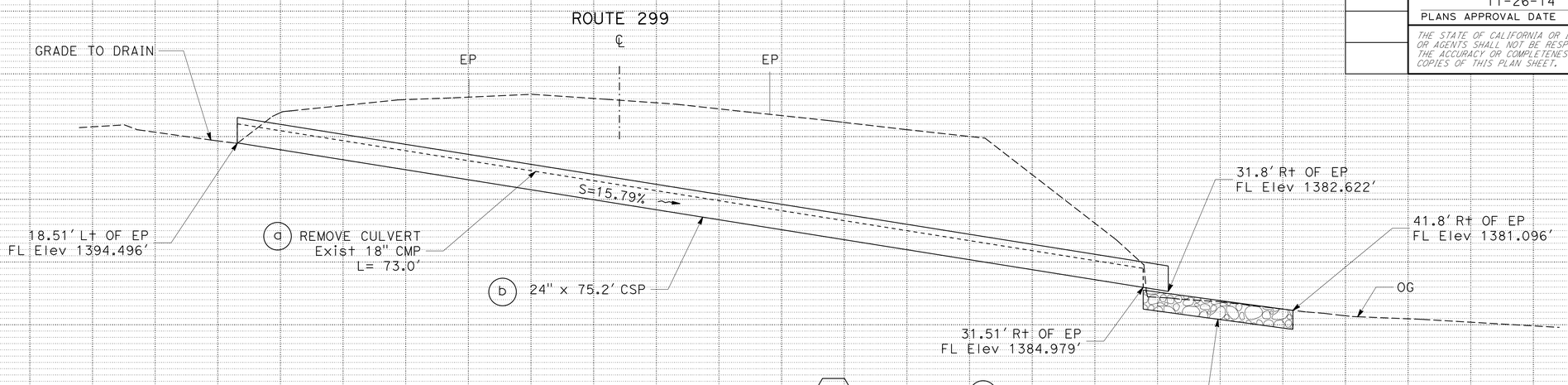

DRAINAGE SYSTEM No. 2
PM 37.35

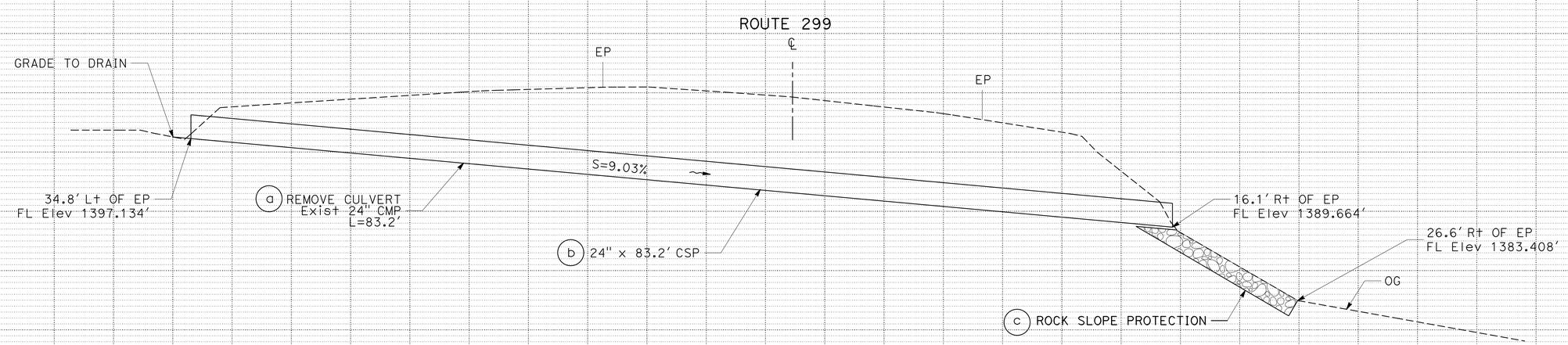

DRAINAGE SYSTEM No. 1
PM 37.31

DRAINAGE PROFILES

SCALE: 1" = 5′ Horiz
1" = 5′ Vert

DP-1

REVISED BY | DATE REVISED
JEANNIE STEFFAN | HEIDI BORDERS
CALCULATED-DESIGNED BY | CHECKED BY
FUNCTIONAL SUPERVISOR: JULIE CASEY

STATE OF CALIFORNIA - DEPARTMENT OF TRANSPORTATION
Caltrans
DESIGN

P:\proj1\02\3E770_plans\pse\23e770ib001.dgn

LAST REVISION 11-25-14 | DATE PLOTTED => 15-JAN-2015 | TIME PLOTTED => 16:09

BORDER LAST REVISED 7/2/2010 | USERNAME => s123119 | DGN FILE => 23e770ib001.dgn | RELATIVE BORDER SCALE IS IN INCHES 0 1 2 3 | UNIT 0318 | PROJECT NUMBER & PHASE: 02-1500-0046-1 EA: 3E7711

Dist	COUNTY	ROUTE	POST MILES TOTAL PROJECT	SHEET No.	TOTAL SHEETS
02	Tri	299	36.9/53.5	60	165

Heidi Borders 11-25-14
REGISTERED CIVIL ENGINEER DATE

11-26-14
PLANS APPROVAL DATE

REGISTERED PROFESSIONAL ENGINEER
HEIDI E. BORDERS
No. C64194
Exp. 6-30-15
CIVIL
STATE OF CALIFORNIA

THE STATE OF CALIFORNIA OR ITS OFFICERS OR AGENTS SHALL NOT BE RESPONSIBLE FOR THE ACCURACY OR COMPLETENESS OF SCANNED COPIES OF THIS PLAN SHEET.

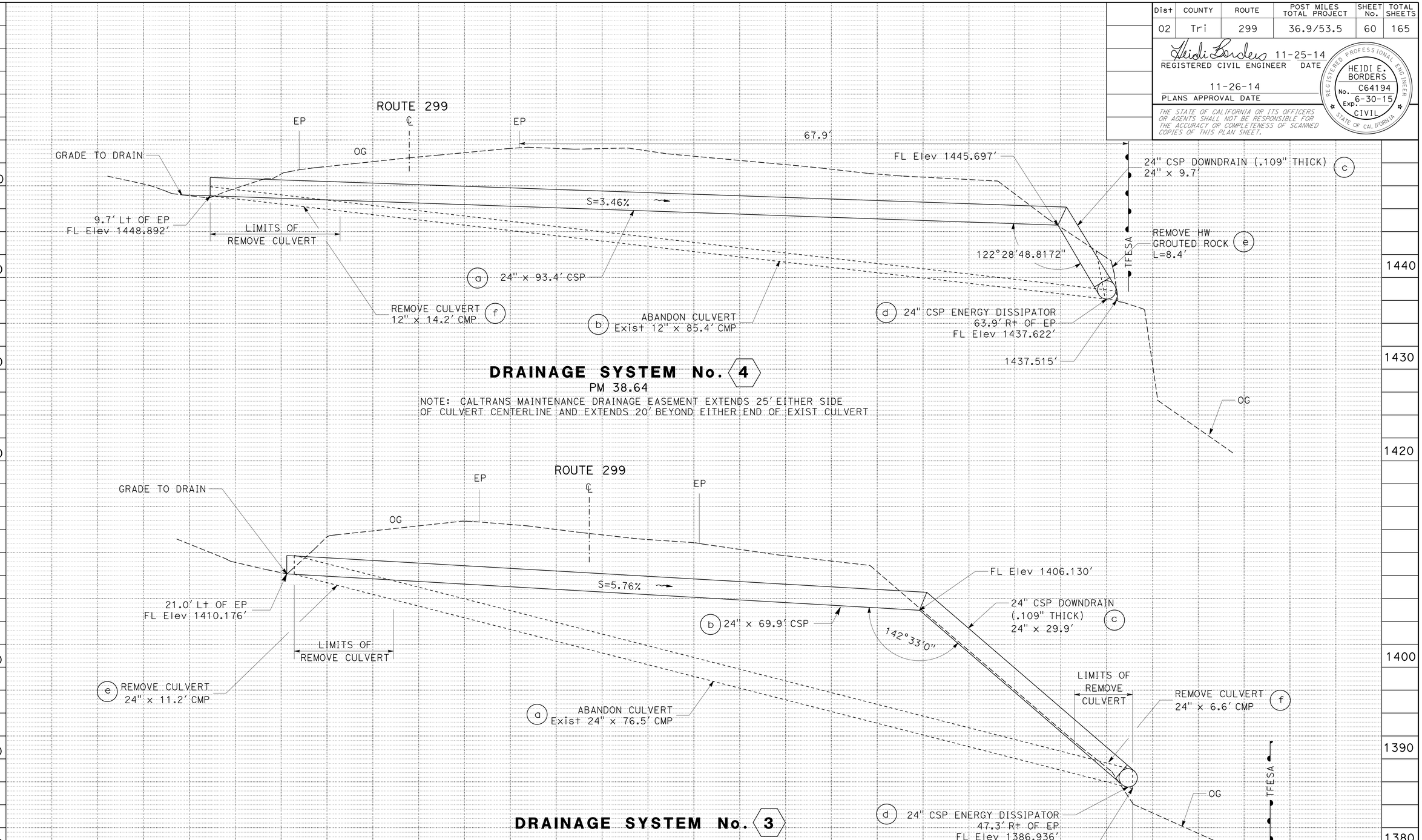

DRAINAGE PROFILES

SCALE: 1" = 5' Horiz
1" = 5' Vert

DP-2

REVISED BY	DATE REVISED
JEANNIE STEFFAN	HEIDI BORDERS
CALCULATED-DESIGNED BY	CHECKED BY
FUNCTIONAL SUPERVISOR	JULIE CASEY

STATE OF CALIFORNIA - DEPARTMENT OF TRANSPORTATION
Caltrans
DESIGN

P:\proj1\02\3E770_plans\pse\23e770ib002.dgn

LAST REVISION 11-25-14 | DATE PLOTTED => 15-JAN-2015 | TIME PLOTTED => 16:09

Dist	COUNTY	ROUTE	POST MILES TOTAL PROJECT	SHEET No.	TOTAL SHEETS
02	Tri	299	36.9/53.5	61	165

Heidi Borders 11-25-14
REGISTERED CIVIL ENGINEER DATE

11-26-14
PLANS APPROVAL DATE

REGISTERED PROFESSIONAL ENGINEER
HEIDI E. BORDERS
No. C64194
Exp. 6-30-15
CIVIL
STATE OF CALIFORNIA

THE STATE OF CALIFORNIA OR ITS OFFICERS OR AGENTS SHALL NOT BE RESPONSIBLE FOR THE ACCURACY OR COMPLETENESS OF SCANNED COPIES OF THIS PLAN SHEET.

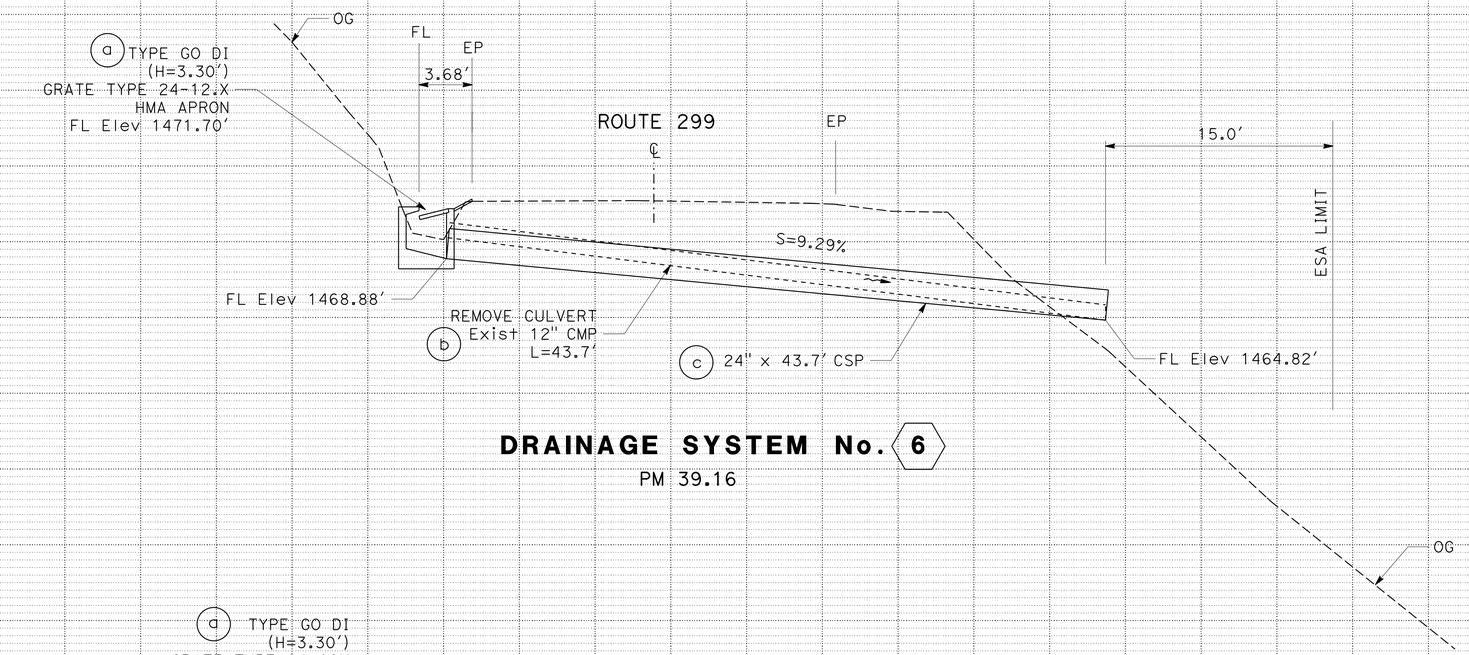

DRAINAGE SYSTEM No. 6

PM 39.16

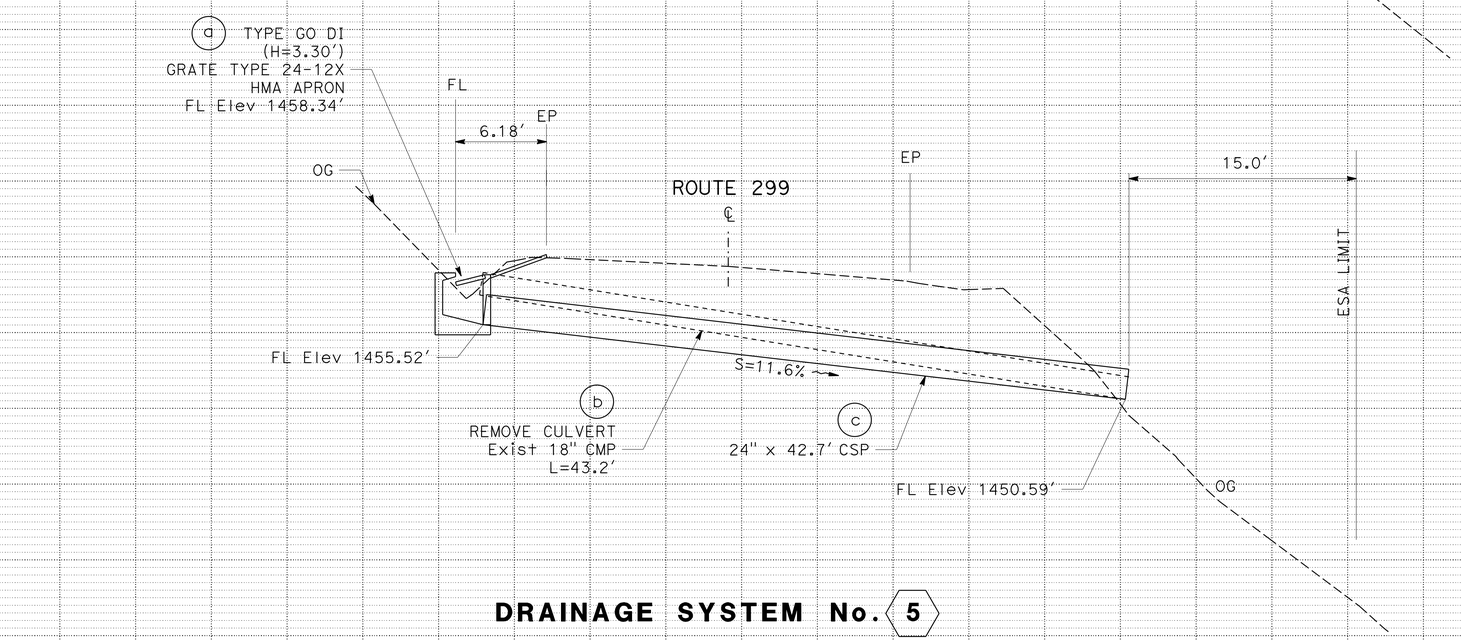

DRAINAGE SYSTEM No. 5

PM 39.08

DRAINAGE PROFILES

SCALE: 1" = 5′ Horiz
1" = 5′ Vert

DP-3

REVISED BY | DATE REVISED
JEANNIE STEFFAN | HEIDI BORDERS
CALCULATED-DESIGNED BY | CHECKED BY
FUNCTIONAL SUPERVISOR: JULIE CASEY

STATE OF CALIFORNIA - DEPARTMENT OF TRANSPORTATION
Caltrans
DESIGN

P:\proj1\02\3E770_plans\pse\23e770ib003.dgn

LAST REVISION 11-25-14 | DATE PLOTTED => 15-JAN-2015 | TIME PLOTTED => 16:09

BORDER LAST REVISED 7/2/2010 | USERNAME => s123119 | DGN FILE => 23e770ib003.dgn | RELATIVE BORDER SCALE IS IN INCHES 0 1 2 3 | UNIT 0318 | PROJECT NUMBER & PHASE: 02-1500-0046-1 EA: 3E7711

Dist	COUNTY	ROUTE	POST MILES TOTAL PROJECT	SHEET No.	TOTAL SHEETS
02	Tri	299	36.9/53.5	62	165

Heidi Borders 11-25-14
REGISTERED CIVIL ENGINEER DATE

11-26-14
PLANS APPROVAL DATE

REGISTERED PROFESSIONAL ENGINEER HEIDI E. BORDERS No. C64194 Exp. 6-30-15 CIVIL STATE OF CALIFORNIA

THE STATE OF CALIFORNIA OR ITS OFFICERS OR AGENTS SHALL NOT BE RESPONSIBLE FOR THE ACCURACY OR COMPLETENESS OF SCANNED COPIES OF THIS PLAN SHEET.

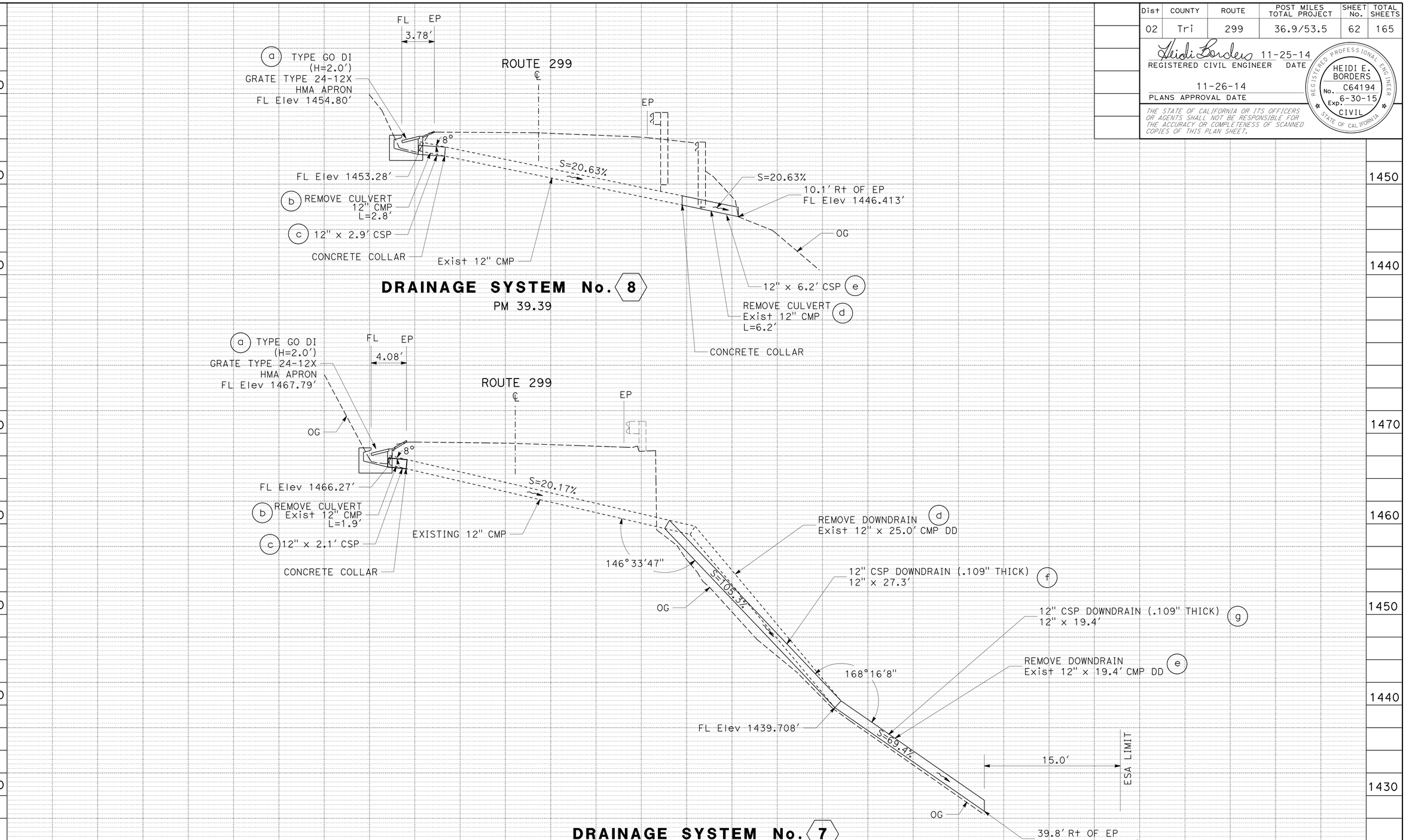

DRAINAGE PROFILES

SCALE: 1" = 5′ Horiz
1" = 5′ Vert

DP-4

REVISED BY | DATE REVISED
JEANNIE STEFFAN | HEIDI BORDERS
CALCULATED-DESIGNED BY | CHECKED BY
FUNCTIONAL SUPERVISOR: JULIE CASEY

STATE OF CALIFORNIA - DEPARTMENT OF TRANSPORTATION
Caltrans
DESIGN

P:\proj1\02\3E770_plans\pse\23e770ib004.dgn

LAST REVISION DATE PLOTTED => 15-JAN-2015
TIME PLOTTED => 16:09
11-25-14

BORDER LAST REVISED 7/2/2010
USERNAME => s123119
DGN FILE => 23e770ib004.dgn
RELATIVE BORDER SCALE IS IN INCHES 0 1 2 3
UNIT 0318
PROJECT NUMBER & PHASE: 02-1500-0046-1 EA: 3E7711

Dist	COUNTY	ROUTE	POST MILES TOTAL PROJECT	SHEET No.	TOTAL SHEETS
02	Tri	299	36.9/53.5	63	165

Heidi Borders 11-25-14
REGISTERED CIVIL ENGINEER DATE

11-26-14
PLANS APPROVAL DATE

REGISTERED PROFESSIONAL ENGINEER HEIDI E. BORDERS No. C64194 Exp. 6-30-15 CIVIL STATE OF CALIFORNIA

THE STATE OF CALIFORNIA OR ITS OFFICERS OR AGENTS SHALL NOT BE RESPONSIBLE FOR THE ACCURACY OR COMPLETENESS OF SCANNED COPIES OF THIS PLAN SHEET.

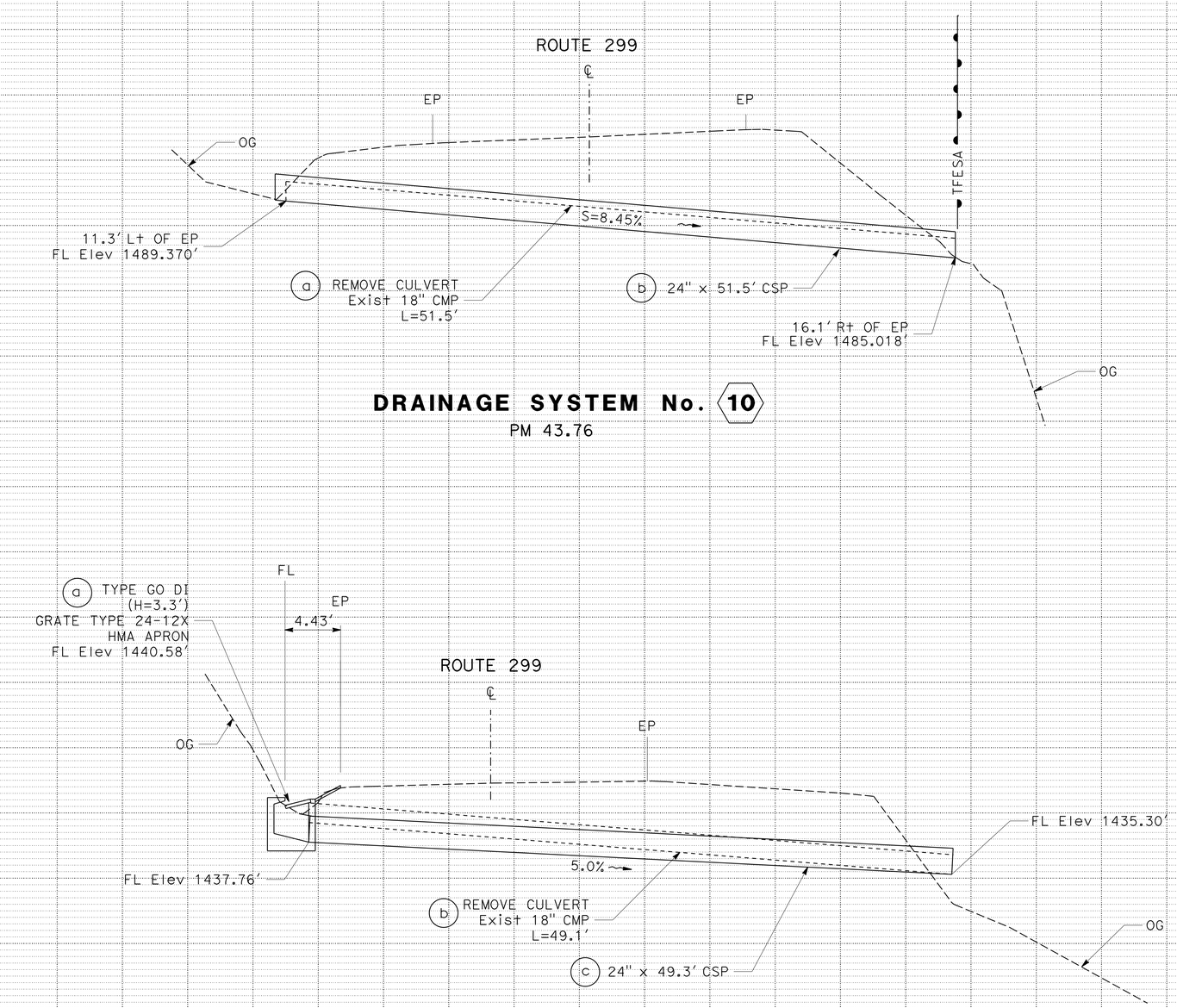

DRAINAGE PROFILES

SCALE: 1" = 5' Horiz
1" = 5' Vert

DP-5

REVISED BY | DATE REVISED
JEANNIE STEFFAN | HEIDI BORDERS
CALCULATED-DESIGNED BY | CHECKED BY
FUNCTIONAL SUPERVISOR: JULIE CASEY

STATE OF CALIFORNIA - DEPARTMENT OF TRANSPORTATION
Caltrans
DESIGN

P:\proj1\02\3E770_plans\pse\23e770ib005.dgn

LAST REVISION | DATE PLOTTED => 15-JAN-2015
11-25-14 | TIME PLOTTED => 16:09

Dist	COUNTY	ROUTE	POST MILES TOTAL PROJECT	SHEET No.	TOTAL SHEETS
02	Tri	299	36.9/53.5	64	165

Heidi Borders 11-25-14
REGISTERED CIVIL ENGINEER DATE

11-26-14
PLANS APPROVAL DATE

HEIDI E. BORDERS No. C64194 Exp. 6-30-15 CIVIL STATE OF CALIFORNIA REGISTERED PROFESSIONAL ENGINEER

THE STATE OF CALIFORNIA OR ITS OFFICERS OR AGENTS SHALL NOT BE RESPONSIBLE FOR THE ACCURACY OR COMPLETENESS OF SCANNED COPIES OF THIS PLAN SHEET.

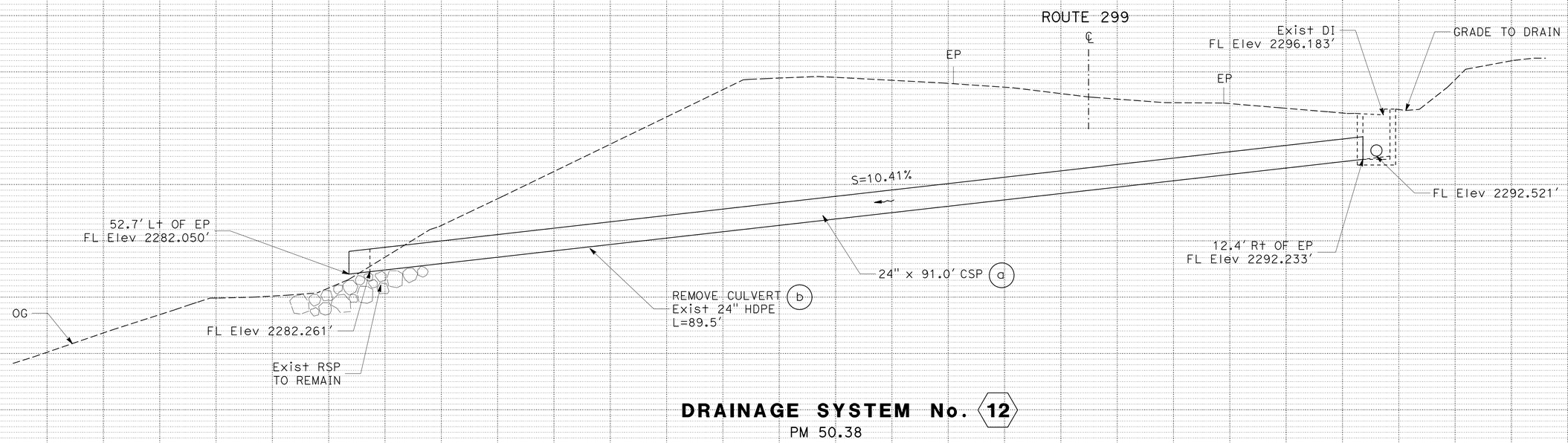

DRAINAGE SYSTEM No. 12
PM 50.38

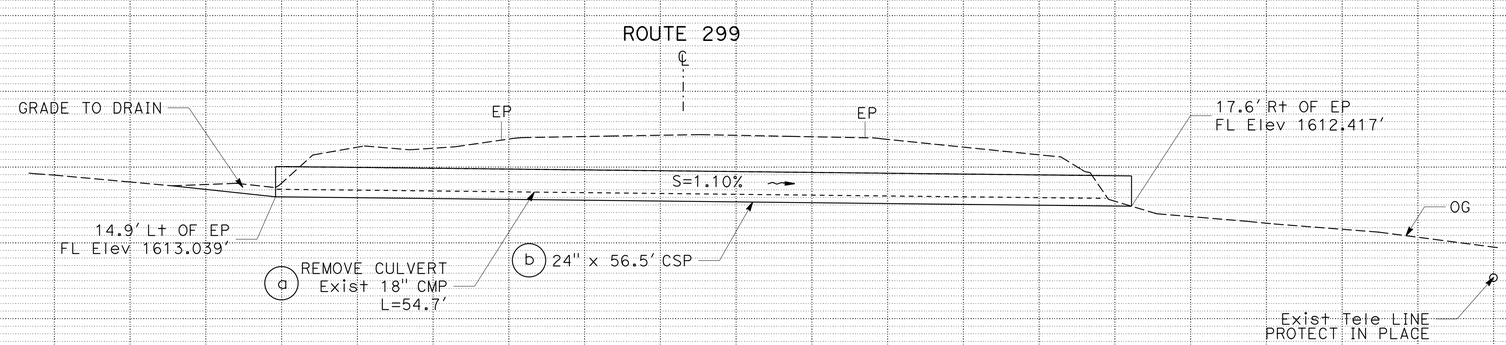

DRAINAGE SYSTEM No. 11
PM 44.94

DRAINAGE PROFILES

SCALE: 1" = 5′ Horiz
1" = 5′ Vert

DP-6

REVISED BY | DATE REVISED
JEANNIE STEFFAN | HEIDI BORDERS
CALCULATED-DESIGNED BY | CHECKED BY
FUNCTIONAL SUPERVISOR: JULIE CASEY

STATE OF CALIFORNIA - DEPARTMENT OF TRANSPORTATION
Caltrans
DESIGN

P:\proj\02\3E770_plans\pse\23e770ib006.dgn

LAST REVISION | DATE PLOTTED => 15-JAN-2015
11-25-14 | TIME PLOTTED => 16:09

Dist	COUNTY	ROUTE	POST MILES TOTAL PROJECT	SHEET No.	TOTAL SHEETS
02	Tri	299	36.9/53.5	65	165

Heidi Borders 11-25-14
REGISTERED CIVIL ENGINEER DATE

11-26-14
PLANS APPROVAL DATE

HEIDI E. BORDERS No. C64194 Exp. 6-30-15 CIVIL — REGISTERED PROFESSIONAL ENGINEER — STATE OF CALIFORNIA

THE STATE OF CALIFORNIA OR ITS OFFICERS OR AGENTS SHALL NOT BE RESPONSIBLE FOR THE ACCURACY OR COMPLETENESS OF SCANNED COPIES OF THIS PLAN SHEET.

LEGEND

PH# POTHOLE LOCATION

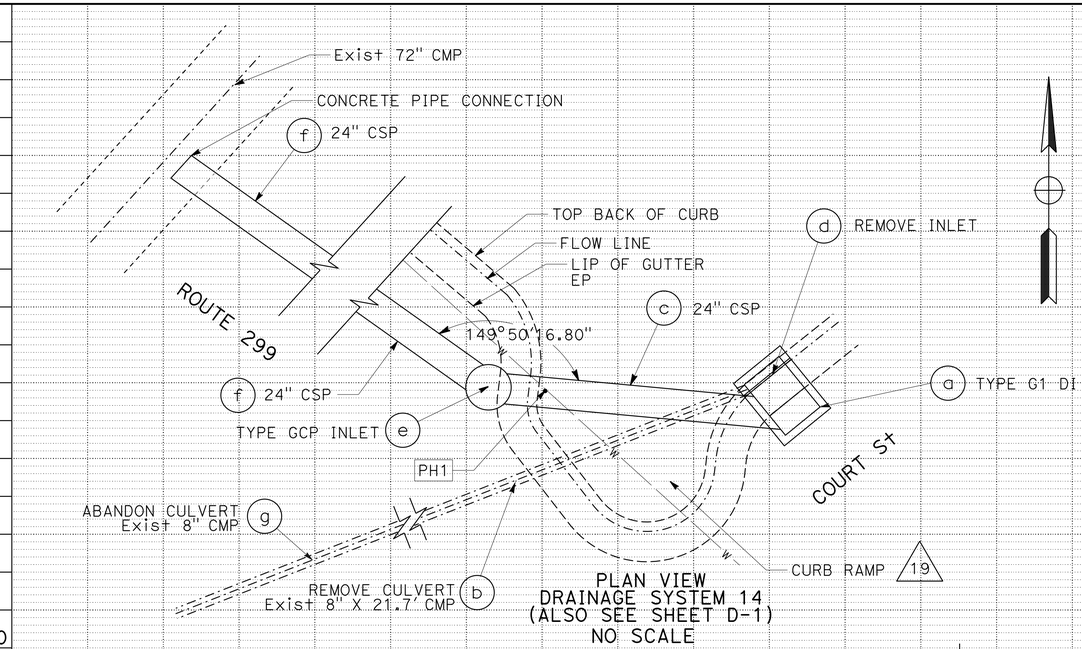

PLAN VIEW
DRAINAGE SYSTEM 14
(ALSO SEE SHEET D-1)
NO SCALE

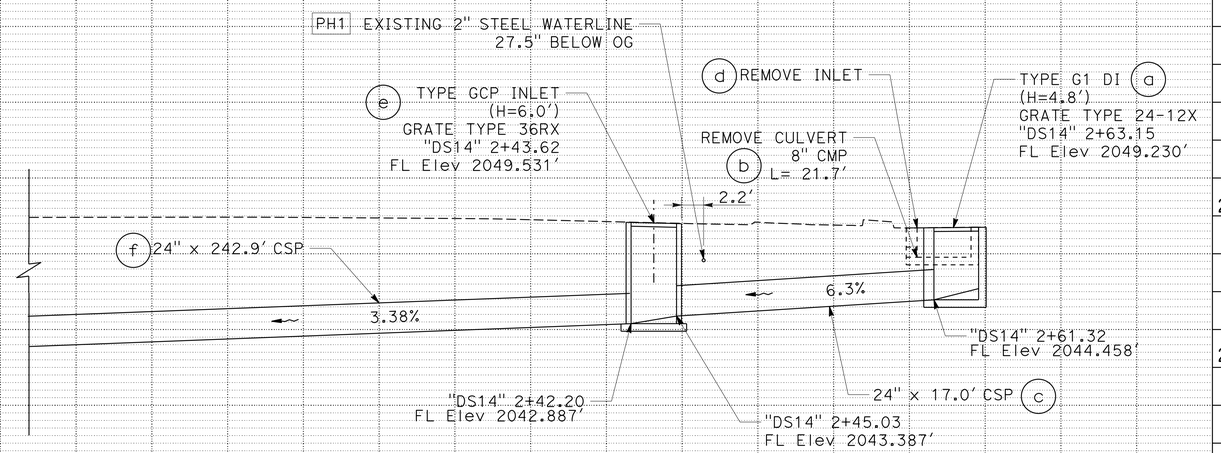

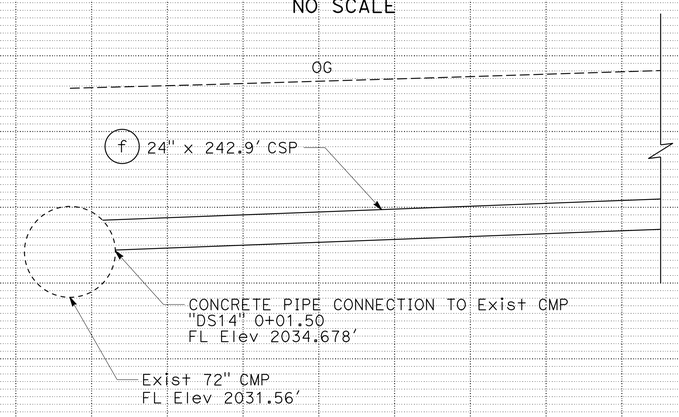

DRAINAGE SYSTEM No. 14
PM 51.47

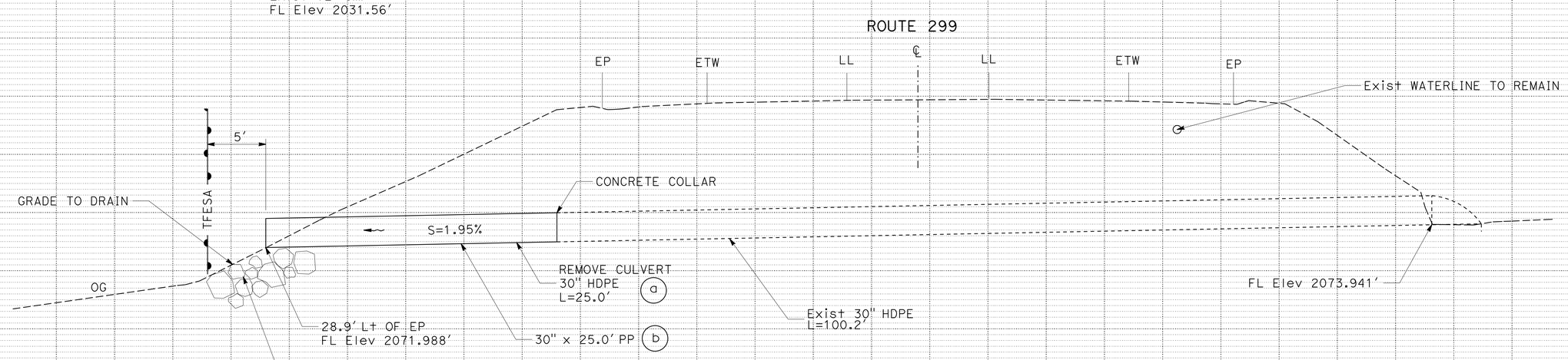

DRAINAGE SYSTEM No. 13
PM 51.03

DRAINAGE PROFILES
SCALE: 1" = 5' Horiz
1" = 5' Vert

DP-7

REVISED BY | DATE REVISED
JEANNIE STEFFAN | HEIDI BORDERS
CALCULATED-DESIGNED BY | CHECKED BY
FUNCTIONAL SUPERVISOR: JULIE CASEY

STATE OF CALIFORNIA - DEPARTMENT OF TRANSPORTATION
Caltrans DESIGN

P:\proj1\02\3E770_plans\pse\23e770ib007.dgn

LAST REVISION DATE PLOTTED => 15-JAN-2015
11-25-14 TIME PLOTTED => 16:09

Dist	COUNTY	ROUTE	POST MILES TOTAL PROJECT	SHEET No.	TOTAL SHEETS
02	Tri	299	36.9/53.5	66	165

Heidi Borders 11-25-14
REGISTERED CIVIL ENGINEER DATE

11-26-14
PLANS APPROVAL DATE

REGISTERED PROFESSIONAL ENGINEER
HEIDI E. BORDERS
No. C64194
Exp. 6-30-15
CIVIL
STATE OF CALIFORNIA

THE STATE OF CALIFORNIA OR ITS OFFICERS OR AGENTS SHALL NOT BE RESPONSIBLE FOR THE ACCURACY OR COMPLETENESS OF SCANNED COPIES OF THIS PLAN SHEET.

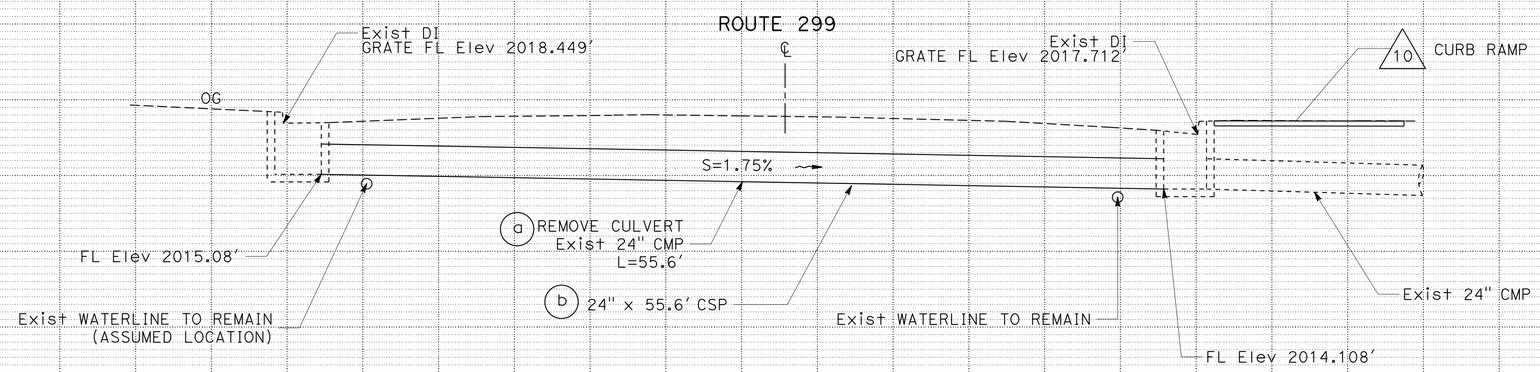

DRAINAGE SYSTEM No. 15

PM 51.63

SKEW ∠ 8°38'53"

DRAINAGE PROFILES

SCALE: 1" = 5' Horiz
1" = 5' Vert

DP-8

REVISED BY	DATE REVISED
JEANNIE STEFFAN	HEIDI BORDERS
CALCULATED-DESIGNED BY	CHECKED BY
FUNCTIONAL SUPERVISOR	JULIE CASEY

STATE OF CALIFORNIA - DEPARTMENT OF TRANSPORTATION
Caltrans
DESIGN

P:\proj1\02\3E770_plans\pse\23e770ib008.dgn

2020 2015 2010

LAST REVISION 11-25-14 | DATE PLOTTED => 15-JAN-2015 | TIME PLOTTED => 16:09

Dist	COUNTY	ROUTE	POST MILES TOTAL PROJECT	SHEET No.	TOTAL SHEETS
02	Tri	299	36.9/53.5	67	165

Heidi Borders 11-25-14
REGISTERED CIVIL ENGINEER DATE

11-26-14
PLANS APPROVAL DATE

REGISTERED PROFESSIONAL ENGINEER HEIDI E. BORDERS No. C64194 Exp. 6-30-15 CIVIL STATE OF CALIFORNIA

THE STATE OF CALIFORNIA OR ITS OFFICERS OR AGENTS SHALL NOT BE RESPONSIBLE FOR THE ACCURACY OR COMPLETENESS OF SCANNED COPIES OF THIS PLAN SHEET.

ROUTE 299

PH# POTHOLE LOCATION

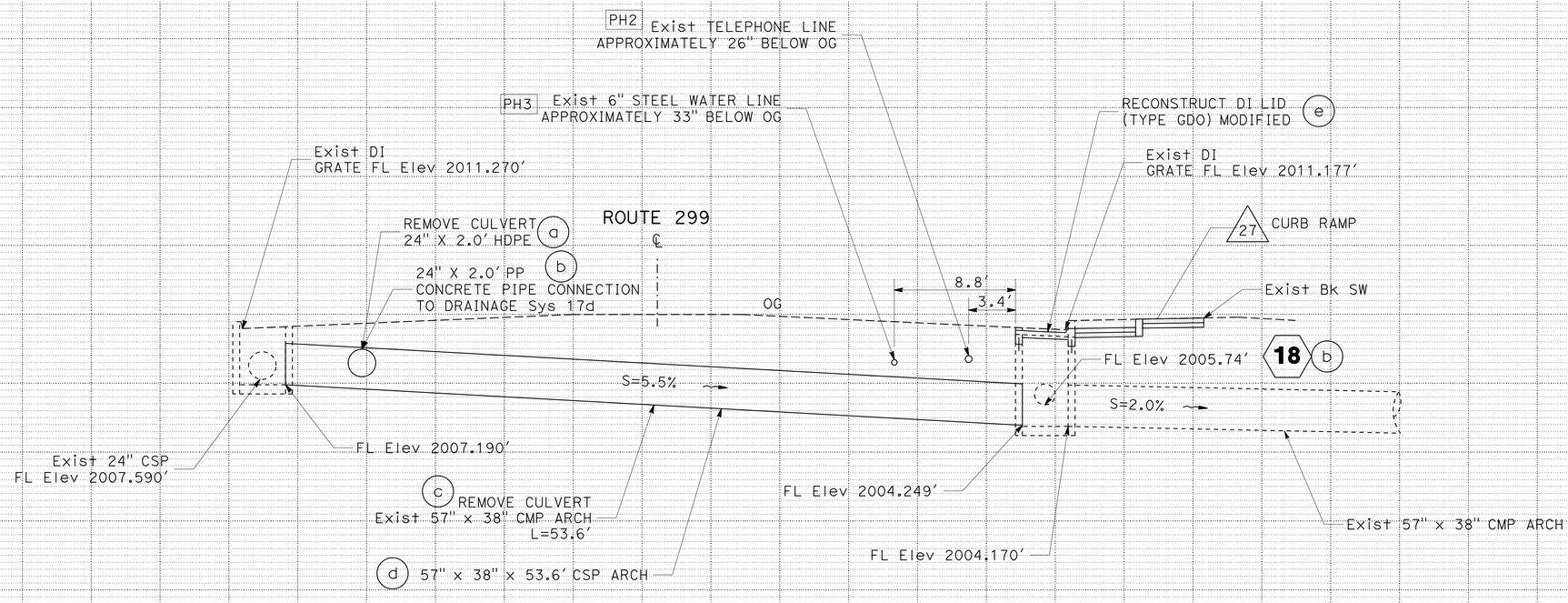

DRAINAGE SYSTEM No. 17
PM 51.80

DRAINAGE PROFILES
SCALE: 1" = 5' Horiz
1" = 5' Vert

DP-9

REVISED BY | DATE REVISED
JEANNIE STEFFAN | HEIDI BORDERS
CALCULATED-DESIGNED BY | CHECKED BY
FUNCTIONAL SUPERVISOR
JULIE CASEY

STATE OF CALIFORNIA - DEPARTMENT OF TRANSPORTATION
Caltrans
DESIGN

P:\proj1\02\3E770_plans\pse\23e770ib009.dgn

LAST REVISION 11-25-14 | DATE PLOTTED => 15-JAN-2015 | TIME PLOTTED => 16:09

Dist	COUNTY	ROUTE	POST MILES TOTAL PROJECT	SHEET No.	TOTAL SHEETS
02	Tri	299	36.9/53.5	68	165

Heidi Borders 11-25-14
REGISTERED CIVIL ENGINEER DATE

11-26-14
PLANS APPROVAL DATE

REGISTERED PROFESSIONAL ENGINEER HEIDI E. BORDERS No. C64194 Exp. 6-30-15 CIVIL STATE OF CALIFORNIA

THE STATE OF CALIFORNIA OR ITS OFFICERS OR AGENTS SHALL NOT BE RESPONSIBLE FOR THE ACCURACY OR COMPLETENESS OF SCANNED COPIES OF THIS PLAN SHEET.

LEGEND

PH# POTHOLE LOCATION

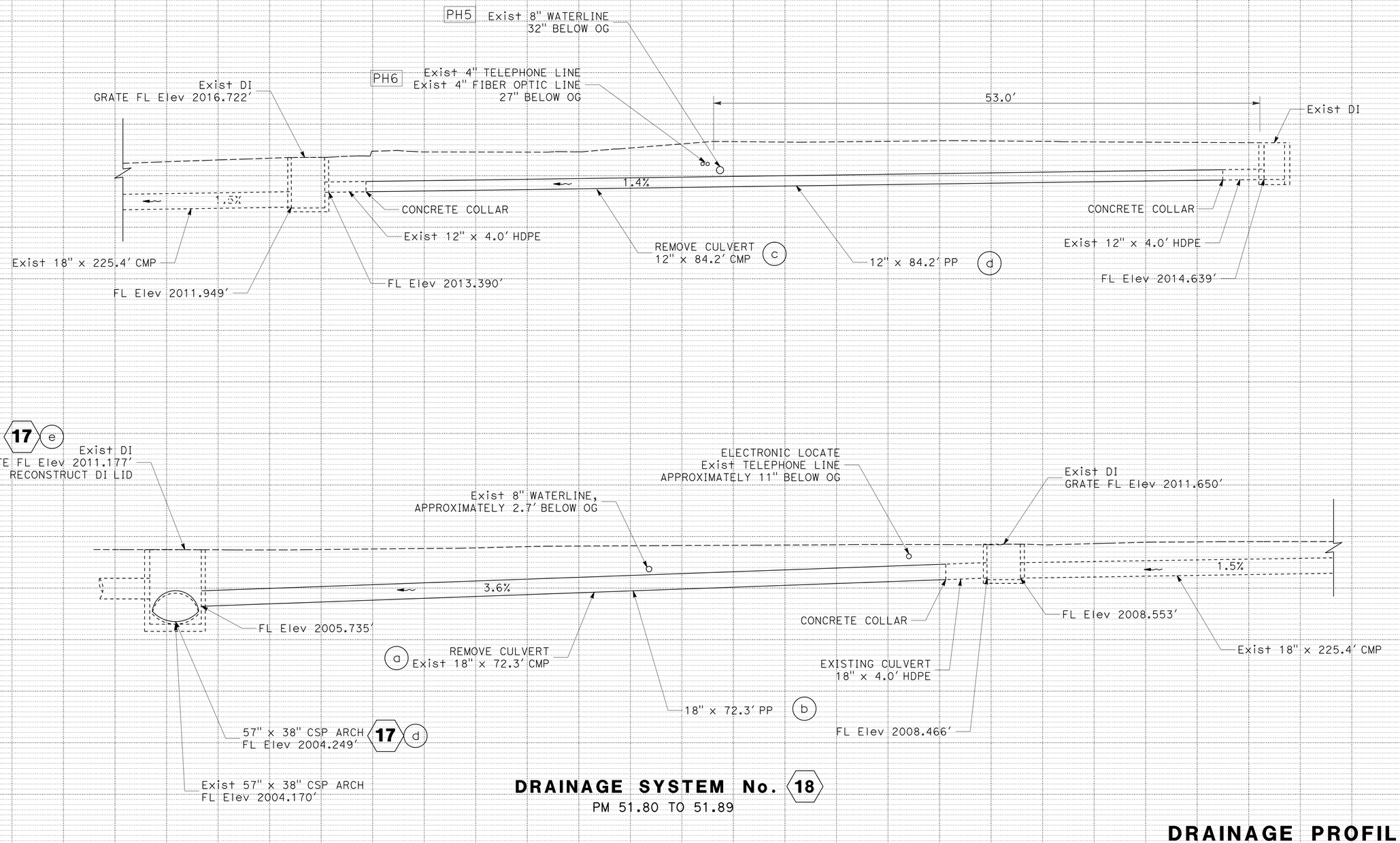

DRAINAGE SYSTEM No. 18
PM 51.80 TO 51.89

DRAINAGE PROFILES
SCALE: 1" = 5' Horiz
1" = 5' Vert

DP-10

REVISED BY | DATE REVISED
JEANNIE STEFFAN | HEIDI BORDERS
CALCULATED-DESIGNED BY | CHECKED BY
FUNCTIONAL SUPERVISOR: JULIE CASEY

STATE OF CALIFORNIA - DEPARTMENT OF TRANSPORTATION
Caltrans
DESIGN

P:\proj1\02\3E770_plans\pse\23e770ib010.dgn

LAST REVISION 11-25-14 | DATE PLOTTED => 15-JAN-2015 | TIME PLOTTED => 16:09

Dist	COUNTY	ROUTE	POST MILES TOTAL PROJECT	SHEET No.	TOTAL SHEETS
02	Tri	299	36.9/53.5	69	165

Heidi Borders 11-25-14
REGISTERED CIVIL ENGINEER DATE

11-26-14
PLANS APPROVAL DATE

REGISTERED PROFESSIONAL ENGINEER
HEIDI E. BORDERS
No. C64194
Exp. 6-30-15
CIVIL
STATE OF CALIFORNIA

THE STATE OF CALIFORNIA OR ITS OFFICERS OR AGENTS SHALL NOT BE RESPONSIBLE FOR THE ACCURACY OR COMPLETENESS OF SCANNED COPIES OF THIS PLAN SHEET.

LEGEND

PH10 POTHOLE LOCATION

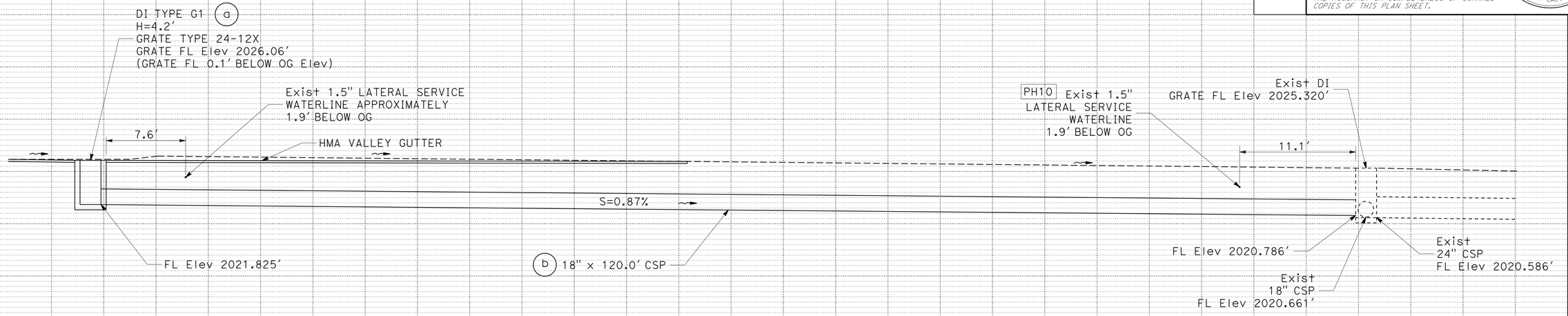

DRAINAGE SYSTEM No. 20

PM 52.30

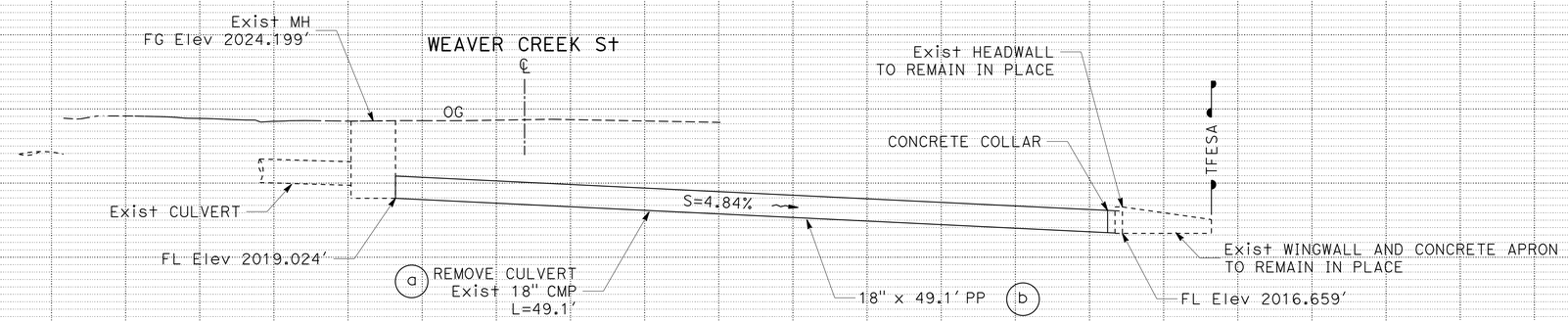

DRAINAGE SYSTEM No. 19

PM 52.14

SKEW ∆ TO WEAVER CREEK St 6°24'39"

DRAINAGE PROFILES

SCALE: 1" = 5' Horiz
1" = 5' Vert

DP-11

REVISED BY | DATE REVISED
JEANNIE STEFFAN | HEIDI BORDERS
CALCULATED-DESIGNED BY | CHECKED BY
FUNCTIONAL SUPERVISOR: JULIE CASEY

STATE OF CALIFORNIA - DEPARTMENT OF TRANSPORTATION
Caltrans
DESIGN

P:\proj1\02\3E770_plans\pse\23e770ib011.dgn

LAST REVISION 11-25-14 | DATE PLOTTED => 15-JAN-2015 | TIME PLOTTED => 16:09

BORDER LAST REVISED 7/2/2010 | USERNAME => s123119 | DGN FILE => 23e770ib011.dgn | RELATIVE BORDER SCALE IS IN INCHES 0 1 2 3 | UNIT 0318 | PROJECT NUMBER & PHASE: 02-1500-0046-1 EA: 3E7711

Dist	COUNTY	ROUTE	POST MILES TOTAL PROJECT	SHEET No.	TOTAL SHEETS
02	Tri	299	36.9/53.5	70	165

Heidi Borders 11-25-14
REGISTERED CIVIL ENGINEER DATE

11-26-14
PLANS APPROVAL DATE

REGISTERED PROFESSIONAL ENGINEER HEIDI E. BORDERS No. C64194 Exp. 6-30-15 CIVIL STATE OF CALIFORNIA

THE STATE OF CALIFORNIA OR ITS OFFICERS OR AGENTS SHALL NOT BE RESPONSIBLE FOR THE ACCURACY OR COMPLETENESS OF SCANNED COPIES OF THIS PLAN SHEET.

LEGEND:

MINOR CONCRETE (MINOR STRUCTURE)

ABBREVIATIONS:

(E) EXISTING
TBC TOP BACK OF CURB

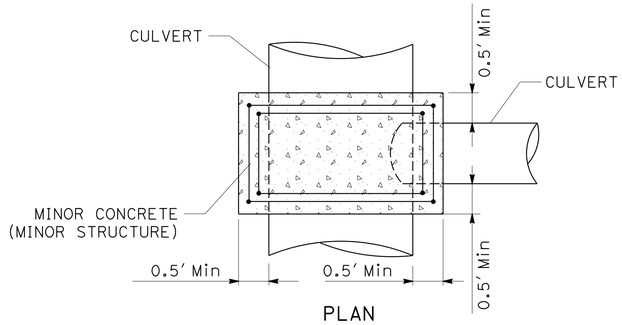

PLAN

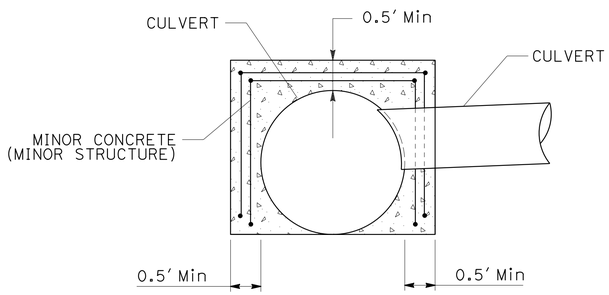

SECTION

CONCRETE PIPE CONNECTION
(Typ)

14 f 17 b

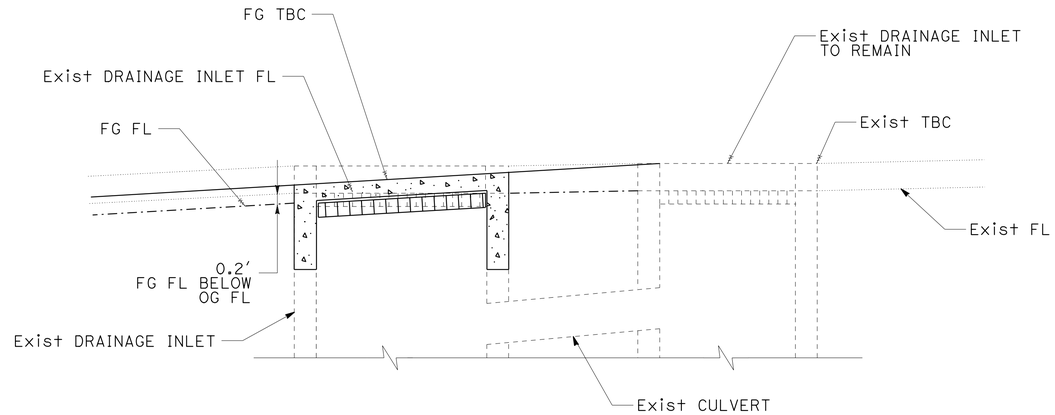

FRONT ELEVATION VIEW

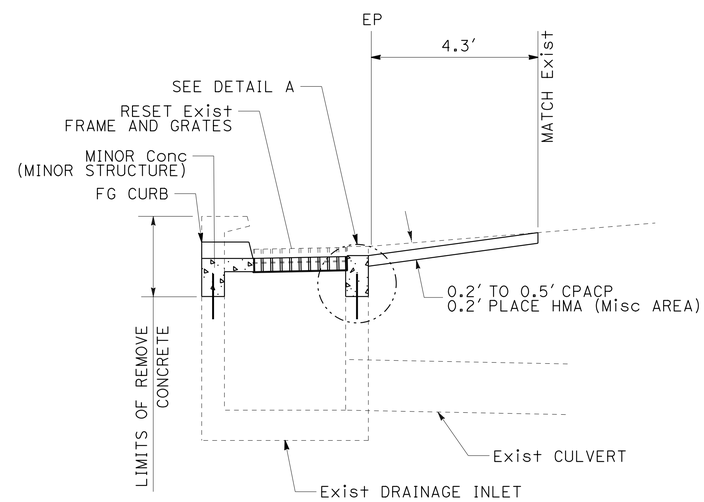

SIDE VIEW

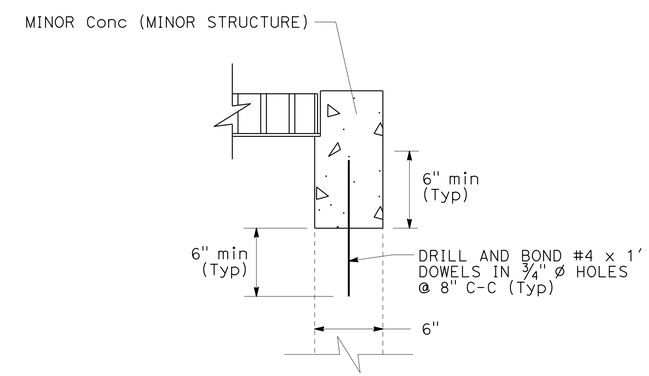

DETAIL A
(TYPICAL)

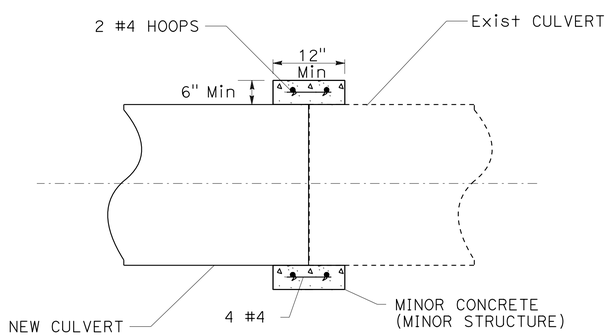

CONCRETE COLLAR
(Typ)

7 c 18 b d
8 c e 19 b
13 b 21 b

RECONSTRUCT LID DI (TYPE GDO) MODIFIED 17 g

NOTE: NEW DI LID DOES NOT HAVE A CURB OPENING.
SEE STD PLANS FOR ADDITIONAL DETAILS

DRAINAGE DETAILS
NO SCALE

DD-1

REVISED BY	DATE REVISED

CALCULATED-DESIGNED BY: JEANNIE STEFFAN
CHECKED BY: HEIDI BORDERS
FUNCTIONAL SUPERVISOR: JULIE CASEY

STATE OF CALIFORNIA - DEPARTMENT OF TRANSPORTATION
Caltrans DESIGN

P:\proj1\02\3E770_plans\pse\23e770ic001.dgn

LAST REVISION 11-25-14 | DATE PLOTTED => 15-JAN-2015 | TIME PLOTTED => 16:09

Dist	COUNTY	ROUTE	POST MILES TOTAL PROJECT	SHEET No.	TOTAL SHEETS
02	Tri	299	36.9/53.5	71	165

Heidi Borders 11-25-14
REGISTERED CIVIL ENGINEER DATE

11-26-14
PLANS APPROVAL DATE

REGISTERED PROFESSIONAL ENGINEER HEIDI E. BORDERS No. C64194 Exp. 6-30-15 CIVIL STATE OF CALIFORNIA

THE STATE OF CALIFORNIA OR ITS OFFICERS OR AGENTS SHALL NOT BE RESPONSIBLE FOR THE ACCURACY OR COMPLETENESS OF SCANNED COPIES OF THIS PLAN SHEET.

NOTES:

1. FOR DETAILS NOT SHOWN, REFER TO STANDARD PLANS.
2. SEE DRAINAGE QUANTITIES FOR LOCATIONS OF APPLICABLE INLETS AND ADJUSTMENT HEIGHTS.
3. CONTRACTOR MUST FIELD VERIFY HEIGHTS PRIOR TO ADJUSTING INLETS.

ABBREVIATIONS:

(E) EXISTING

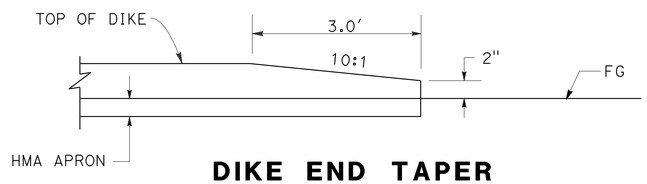

DIKE END TAPER
TYPICAL

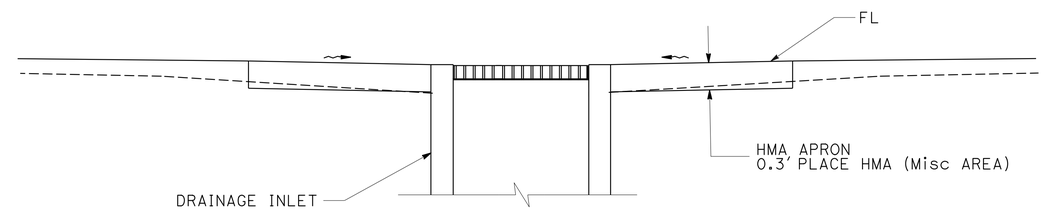

SECTION A-A

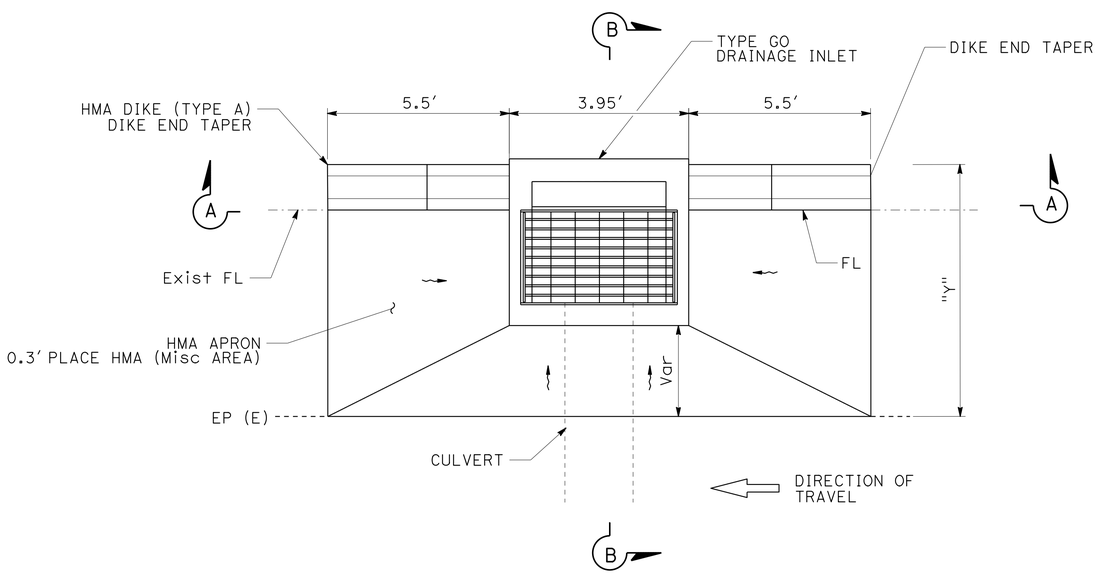

HMA APRON AND DIKE

5a 6a 7a 8a 9a

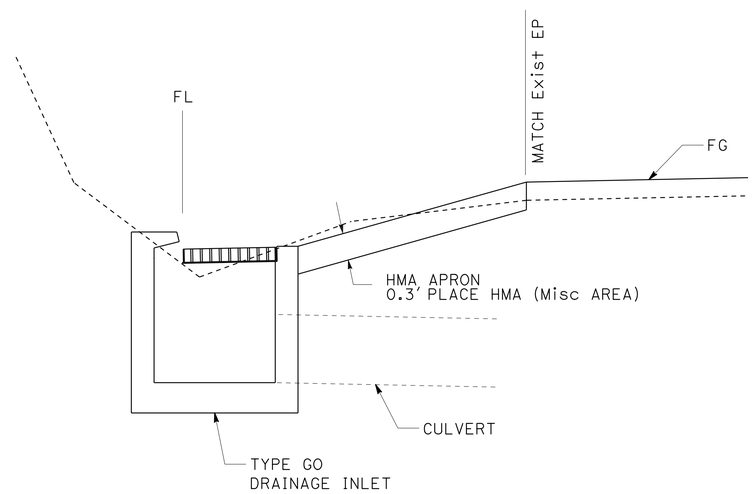

SECTION B-B

HMA APRON

DRAINAGE SYSTEM	"Y"	HMA APRON AREA (SQYD)
5a	6.18	10.3
6a	3.68	6.1
7a	4.08	6.8
8a	3.78	6.3
9a	4.43	7.4

DRAINAGE DETAILS
NO SCALE

DD-2

REVISED BY | DATE REVISED
JEANNIE STEFFAN | HEIDI BORDERS
CALCULATED-DESIGNED BY | CHECKED BY
FUNCTIONAL SUPERVISOR | JULIE CASEY
STATE OF CALIFORNIA - DEPARTMENT OF TRANSPORTATION
Caltrans DESIGN
P:\proj1\02\3E770_plans\pse\23e770ic002.dgn

LAST REVISION 11-25-14 | DATE PLOTTED => 15-JAN-2015 | TIME PLOTTED => 16:09

Dist	COUNTY	ROUTE	POST MILES TOTAL PROJECT	SHEET No.	TOTAL SHEETS
02	Tri	299	36.9/53.5	72	165

Heidi Borders 11-25-14
REGISTERED CIVIL ENGINEER DATE

11-26-14
PLANS APPROVAL DATE

REGISTERED PROFESSIONAL ENGINEER HEIDI E. BORDERS No. C64194 Exp. 6-30-15 CIVIL STATE OF CALIFORNIA

THE STATE OF CALIFORNIA OR ITS OFFICERS OR AGENTS SHALL NOT BE RESPONSIBLE FOR THE ACCURACY OR COMPLETENESS OF SCANNED COPIES OF THIS PLAN SHEET.

LEGEND:

- HMA VALLEY GUTTER 0′ TO 0.3′ CPACP 0.2′ HMA (TYPE A)
- RSP (No.1, METHOD B)
- PH# POTHOLE LOCATION

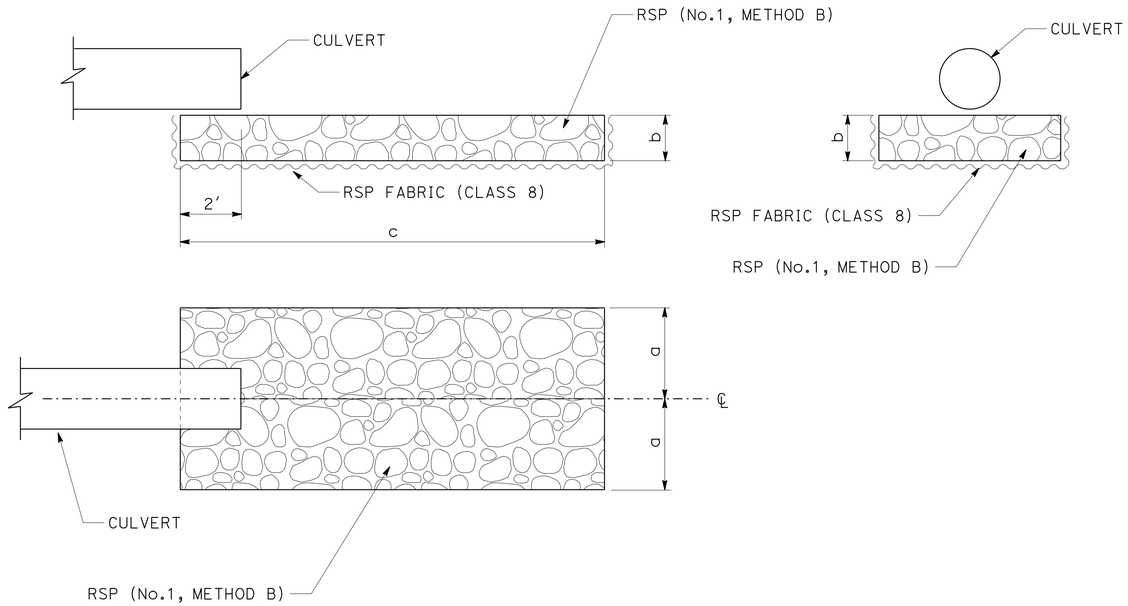

ROCK SLOPE PROTECTION

1 c 2 c

		a	b	c
1	c	2.0′	1.5′	15′
2	c	2.0′	1.5′	12′

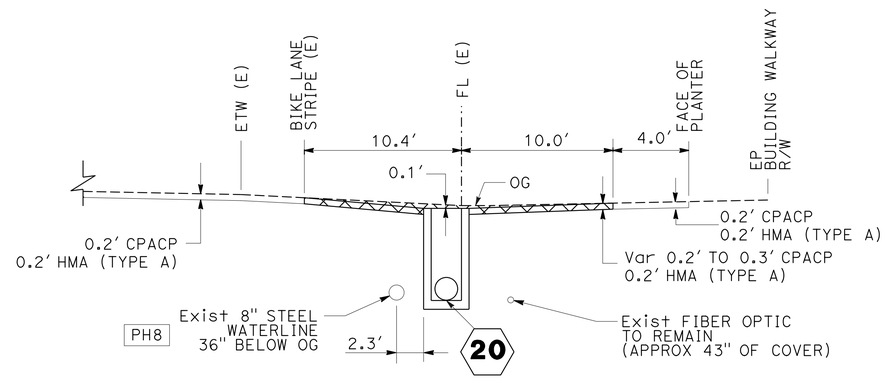

SECTION A-A
TYPICAL
NOTE: MAINTAIN EXISTING HORIZONTAL FLOWLINE ALIGNMENT

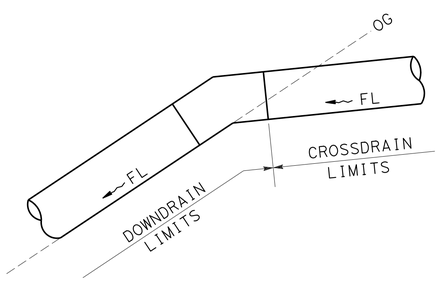

LIMITS OF MEASUREMENT FOR PAYMENT

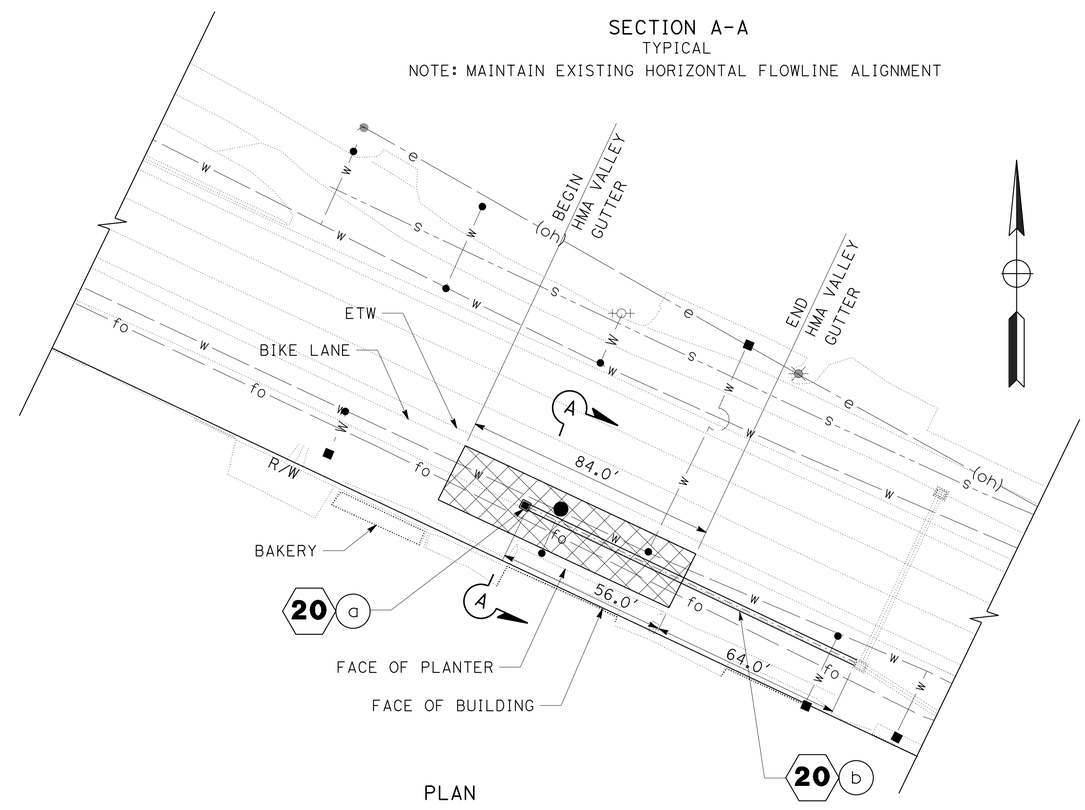

PLAN
HMA VALLEY GUTTER
PM 52.3

NOTE: QUANTITIES FOR HMA VALLEY GUTTER ARE SHOWN IN THE SUMMARY OF QUANTITIES

DRAINAGE DETAILS
NO SCALE

DD-3

STATE OF CALIFORNIA - DEPARTMENT OF TRANSPORTATION
Caltrans DESIGN
FUNCTIONAL SUPERVISOR: JULIE CASEY
CALCULATED-DESIGNED BY: JEANNIE STEFFAN
CHECKED BY: HEIDI BORDERS
REVISED BY
DATE REVISED

P:\proj1\02\3E770_plans\pse\23e770ic003.dgn

LAST REVISION 11-25-14
DATE PLOTTED => 15-JAN-2015
TIME PLOTTED => 16:09

Dist	COUNTY	ROUTE	POST MILES TOTAL PROJECT	SHEET No.	TOTAL SHEETS
02	Tri	299	36.9/53.5	73	165

Heidi Borders 11-25-14
REGISTERED CIVIL ENGINEER DATE

11-26-14
PLANS APPROVAL DATE

REGISTERED PROFESSIONAL ENGINEER HEIDI E. BORDERS No. C64194 Exp. 6-30-15 CIVIL STATE OF CALIFORNIA

THE STATE OF CALIFORNIA OR ITS OFFICERS OR AGENTS SHALL NOT BE RESPONSIBLE FOR THE ACCURACY OR COMPLETENESS OF SCANNED COPIES OF THIS PLAN SHEET.

NOTES:

1. ALL PIPE JOINT CLASSIFICATIONS ARE POSITIVE JOINT TYPE.
2. ALL JOINTS TO BE WATERTIGHT.
3. (N) - NOT A SEPARATE PAY ITEM, FOR INFORMATION ONLY

DRAINAGE QUANTITIES

POST MILE	DRAINAGE SYSTEM No.	DRAINAGE UNIT No.	ABANDON CULVERT (EA)	REMOVE CULVERT	REMOVE DOWNDRAIN	REMOVE INLET	SAND BACKFILL	12" CORRUGATED STEEL PIPE	24" CORRUGATED STEEL PIPE (.109" THICK)	12" PP	18" PP	24" PP	30" PP	36" PRECAST CONCRETE PIPE INLET	57" X 38" CORRUGATED STEEL PIPE ARCH (.109" THICK)	MINOR CONCRETE (MINOR STRUCTURE) **	PLACE HOT MIX ASPHALT (MISCELLANEOUS AREA) *	MISCELLANEOUS IRON & STEEL	RECONSTRUCT DI LID	PLACE HMA DIKE (TYPE A)	RSP (No.1, METHOD B) (CY)	RSP (1/2T, METHOD A)	RSP (2T, METHOD A)	RSP FABRIC (CLASS 8)	GEOMEMBRANE	CLEANING, INSPECTING AND PREPARING CULVERT	24" CURED-IN-PLACE PIPELINER	MARKER (CULVERT)	ANCHOR ASSEMBLY	12" CSP DOWNDRAIN	24" CSP DOWNDRAIN (.109" THICK)	REMOVE HEADWALL	24" CSP ENERGY DISSIPATOR (.064" THICK)	(N) DRAINAGE INLET "H"	(N) Max HEIGHT OF COVER	DESCRIPTION
			EA	LF	LF	EA	CY	LF	LF	LF	LF	LF	LF	LF	LF	CY	SQYD	LB	EA	LF	CY	TON	TON	SQYD	SQYD	LF	LF	EA	EA	LF	LF	EA	EA	FT	LF	
37.31	1	a		83.2																																
		b							83.2																			2							6.0	
		c																			3.3			13.0												
37.35	2	a		73.0																																
		b							75.2																			2							7.8	
		c																			2.7			10.7												
37.80	3	a	1				8.9																													Exist 24" X 94.3' CMP
		b							69.9																			2							5.0	
		c																											2		29.9					
		d																															1			
		e		11.2																																
		f		6.6																																
38.64	4	a							93.4																											
		b	1				2.5																					2								Exist 12" X 99.6' CMP
		c																											1		9.7					
		d																															1			
		e																														1				Exist GROUTED ROCK HEADWALL
		f		14.2																																
39.08	5	a														1.31	10.3	239		11														3.3		TYPE GO DI W/ APRON & DIKE
		b		43.2																																
		c							42.7																			2							4.5	
39.16	6	a														1.31	6.1	239		11														3.3		TYPE GO DI W/ APRON & DIKE
		b		43.7																																
		c							43.7																			2							4.2	
39.32	7	a														1.24	6.8	239		11														2.0		TYPE GO DI W/ APRON & DIKE
		b		1.9																																
		c						2.1								0.04												2								ELBOW (N)
		d			25.0																															
		e			19.4																															
		f																											2	27.3						ELBOW (N)
		g																											1	19.4						ELBOW (N)
39.39	8	a														1.24	6.3	239		11														2.0		TYPE GO DI W/ APRON & DIKE
		b		2.8																																
		c						2.9								0.04												2								ELBOW (N)
		d		6.2																																
		e						6.2								0.04																				
39.51	9	a														1.31	7.4	239		11														3.3		TYPE GO DI W/ APRON & DIKE
		b		49.1																																
		c							49.3																			2							4.0	
SHEET TOTAL			2	335.1	44.4		11.4	11.2	457.4							6.53	36.9	1195		55	6.0			23.7				18	6	46.7	39.6	1	2			

* SEE CURB RAMP QUANTITIES AND ROADWAY ITEM QUANTITIES FOR TOTALS
** SEE MBGR ITEMS FOR ADDITIONAL QUANTITIES

DRAINAGE QUANTITIES

DQ-1

CALCULATED-DESIGNED BY JEANNIE STEFFAN
CHECKED BY HEIDI BORDERS
REVISED BY
DATE REVISED
FUNCTIONAL SUPERVISOR JULIE CASEY

STATE OF CALIFORNIA - DEPARTMENT OF TRANSPORTATION
Caltrans DESIGN

P:\proj1\02\3E770_plans\pse\23e770id001.dgn

LAST REVISION 11-25-14 | DATE PLOTTED => 22-JAN-2015 | TIME PLOTTED => 12:17

Dist	COUNTY	ROUTE	POST MILES TOTAL PROJECT	SHEET No.	TOTAL SHEETS
02	Tri	299	36.9/53.5	74	165

Heidi Borders 11-25-14
REGISTERED CIVIL ENGINEER DATE

11-26-14
PLANS APPROVAL DATE

REGISTERED PROFESSIONAL ENGINEER HEIDI E. BORDERS No. C64194 Exp. 6-30-15 CIVIL STATE OF CALIFORNIA

THE STATE OF CALIFORNIA OR ITS OFFICERS OR AGENTS SHALL NOT BE RESPONSIBLE FOR THE ACCURACY OR COMPLETENESS OF SCANNED COPIES OF THIS PLAN SHEET.

NOTE:

1. ALL PIPE JOINT CLASSIFICATIONS ARE POSITIVE JOINT TYPE.
2. ALL JOINTS TO BE WATERTIGHT.
3. (N) - NOT A SEPARATE PAY ITEM, FOR INFORMATION ONLY

* SEE CURB RAMP QUANTITIES AND ROADWAY ITEM QUANTITIES FOR TOTALS
** SEE MBGR ITEMS FOR ADDITIONAL QUANTITIES
*** FOR SLIP OUT REPAIR QUANTITIES SEE SUMMARY OF QUANTITIES SHEET

DRAINAGE QUANTITIES

POST MILE	DRAINAGE SYSTEM No.	DRAINAGE UNIT No.	ABANDON CULVERT (EA)	REMOVE CULVERT	REMOVE DOWNDRAIN	REMOVE INLET	SAND BACKFILL	12" CORRUGATED STEEL PIPE	24" CORRUGATED STEEL PIPE (.109" THICK)	12" PP	18" PP	24" PP	30" PP	36" PRECAST CONCRETE PIPE INLET	57" X 38" CORRUGATED STEEL PIPE ARCH (.109" THICK)	MINOR CONCRETE (MINOR STRUCTURE) **	PLACE HOT MIX ASPHALT (MISCELLANEOUS AREA) *	MISCELLANEOUS IRON & STEEL	RECONSTRUCT DI LID	PLACE HMA DIKE (TYPE A)	RSP (No.1, METHOD B) (CY)	RSP (1/2T, METHOD A)	RSP (2T, METHOD A)	RSP FABRIC (CLASS 8)	GEOMEMBRANE	CLEANING, INSPECTING AND PREPARING CULVERT	24" CURED-IN-PLACE PIPELINER	MARKER (CULVERT)	ANCHOR ASSEMBLY	12" CSP DOWNDRAIN	24" CSP DOWNDRAIN (.109" THICK)	REMOVE HW	24" CSP ENERGY DISSIPATOR (.064" THICK)	DRAINAGE INLET "H" (N)	MAX HEIGHT OF COVER (N)	DESCRIPTION
			EA	LF	LF	EA	CY	LF	LF	LF	LF	LF	LF	LF	LF	CY	SQYD	LB	EA	LF	CY	TON	TON	SQYD	SQYD	LF	LF	EA	EA	LF	LF	EA	EA	FT	LF	
43.76	10	a		51.5																																
		b							51.5																			2							6.7	
44.94	11	a		54.7																																
		b							56.5																			2							2.5	
50.38	12	a							91.0																			2							10.7	
		b		89.5																																
51.03	13	a		25.0																																
		b											25.0			0.09												1								
51.47	14	a														1.35		239																4.8		TYPE G1 DI
		b		21.7																																
		c							17.0																											
		d				1																														
		e												6.5		0.50		215																6.0		TYPE GCP INLET
		f							242.9							1.67																				GROUT CONNECTION
		g	1																																	
51.63	15	a		55.6																																
		b							55.6																										4.5	
51.79	16			OMITTED																																OMITTED
51.80	17	a		2.0																																
		b										2.0				0.86																			2.3	GROUT CONNECTION
		c		53.6																																
		d													53.6																				4.1	
		e																	1																	
51.89	18	a		72.3																																
		b									72.3					0.06																				
		c		84.2																															4.0	
		d								84.2						0.08																				
52.14	19	a		49.1																																
		b									49.1					0.06																			3.0	WITH CONCRETE COLLAR
52.30	20	a														1.22		239																4.2		TYPE G1 DI
		b									120.0																								3.5	
50.50	21	a																								96.1	96.1	2							14.0	@ SLIP OUT REPAIR ***
		b							19.9							0.06																				
		c			30.0																															
		d																											2		36.0					
		e																					1607	850												
		f																				2768														
		g																			2.7			23.4	11.7											
		h		8.8																																
SHEET TOTAL			1	568.0	30.0	1			534.4	84.2	241.4	2.0	25.0	6.5	53.6	5.95		693	1		2.7	2768	1607	873.4	11.7	96.1	96.1	9	2		36.0					
FROM Sht DQ-1			2	335.1	44.4		11.4	11.2	457.4							6.53	36.9	1195		55	6.0			23.7				18	6	47	39.6	1	2			
TOTAL			3	903.1	74.4	1	11.4	11.2	991.8	84.2	241.4	2.0	25.0	6.5	53.6	12.48	36.9	1888	1	55	8.7	2768	1607	897.1	11.7	96.1	96.1	27	8	47	75.6	1	2			

DRAINAGE QUANTITIES DQ-2

REVISED BY | DATE REVISED
JEANNIE STEFFAN | HEIDI BORDERS
CALCULATED-DESIGNED BY | CHECKED BY
FUNCTIONAL SUPERVISOR | JULIE CASEY
STATE OF CALIFORNIA - DEPARTMENT OF TRANSPORTATION
Caltrans DESIGN
P:\proj1\02\3E770_plans\pse\23e770id002.dgn

LAST REVISION 11-25-14 | DATE PLOTTED => 22-JAN-2015 | TIME PLOTTED => 12:17

Dist	COUNTY	ROUTE	POST MILES TOTAL PROJECT	SHEET No.	TOTAL SHEETS
02	Tri	299	36.9/53.5	75	165

Heidi Borders 11-25-14
REGISTERED CIVIL ENGINEER DATE

11-26-14
PLANS APPROVAL DATE

REGISTERED PROFESSIONAL ENGINEER
HEIDI E. BORDERS
No. C64194
Exp. 6-30-15
CIVIL
STATE OF CALIFORNIA

THE STATE OF CALIFORNIA OR ITS OFFICERS OR AGENTS SHALL NOT BE RESPONSIBLE FOR THE ACCURACY OR COMPLETENESS OF SCANNED COPIES OF THIS PLAN SHEET.

NOTE:

1. FOR ACCURATE RIGHT OF WAY DATA, CONTACT RIGHT OF WAY ENGINEERING AT THE DISTRICT OFFICE.

LEGEND:

-e——— ———(oh)-	EXISTING OVERHEAD ELECTRICAL
——--t——— ———--	EXISTING TELE LINE
-——w—— ——— ———	EXISTING WATER LINE
———--s———--———	EXISTING SEWER LINE
-·-·-·-·-·-·-·-·-	ENCROACHMENT PERMIT
- - - - - - - - - -	TEMPORARY CONTRUCTION EASEMENT (TCE)
PH#	POTHOLE LOCATION

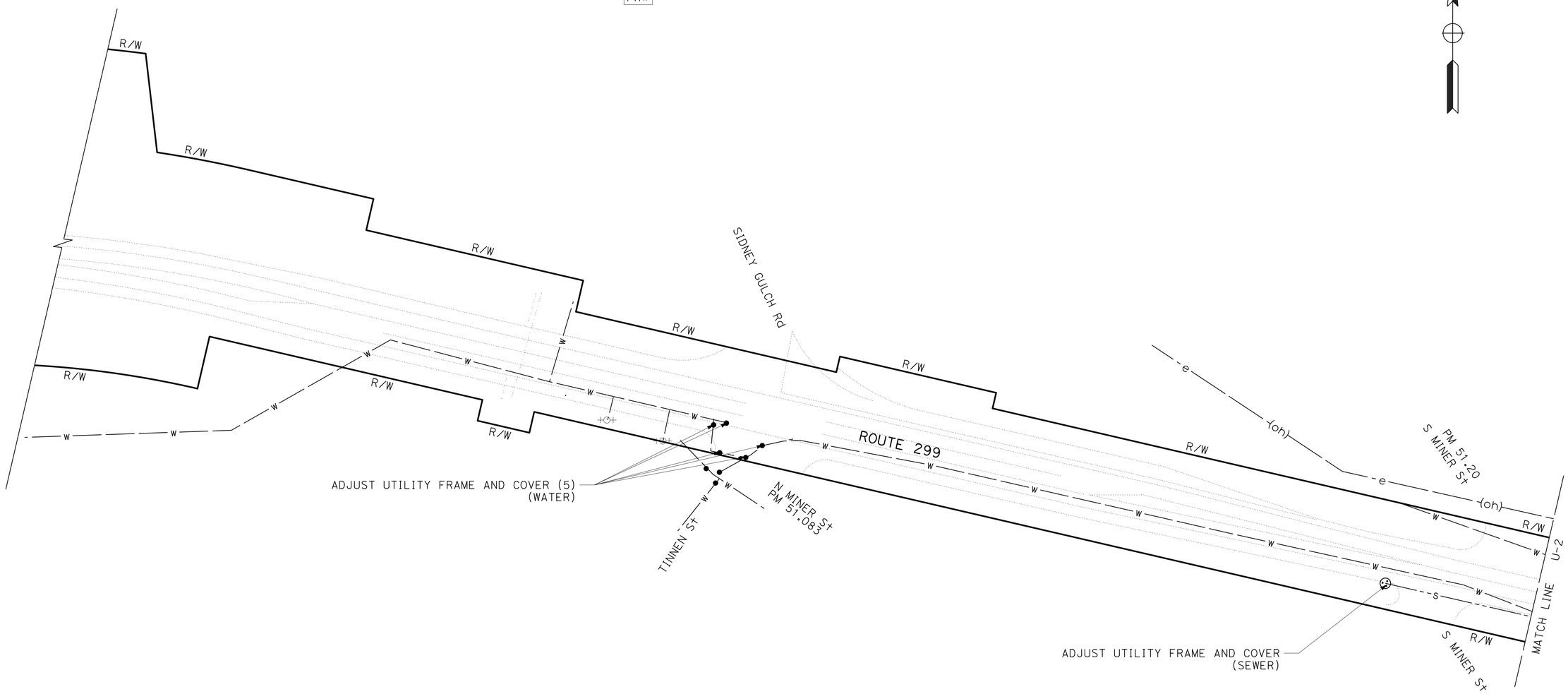

UTILITY PLAN

SCALE: 1" = 50'

U-1

APPROVED FOR UTILITY WORK ONLY

STATE OF CALIFORNIA - DEPARTMENT OF TRANSPORTATION
Caltrans
DESIGN

FUNCTIONAL SUPERVISOR: JULIE CASEY
CALCULATED-DESIGNED BY: JEANNIE STEFFAN
CHECKED BY: HEIDI BORDERS
REVISED BY
DATE REVISED

P:\proj1\02\3E770_plans\pse\23e770ka001.dgn

LAST REVISION 11-25-14
DATE PLOTTED => 15-JAN-2015
TIME PLOTTED => 16:09

Dist	COUNTY	ROUTE	POST MILES TOTAL PROJECT	SHEET No.	TOTAL SHEETS
02	Tri	299	36.9/53.5	76	165

Heidi Borders 11-25-14
REGISTERED CIVIL ENGINEER DATE

11-26-14
PLANS APPROVAL DATE

REGISTERED PROFESSIONAL ENGINEER
HEIDI E. BORDERS
No. C64194
Exp. 6-30-15
CIVIL
STATE OF CALIFORNIA

THE STATE OF CALIFORNIA OR ITS OFFICERS OR AGENTS SHALL NOT BE RESPONSIBLE FOR THE ACCURACY OR COMPLETENESS OF SCANNED COPIES OF THIS PLAN SHEET.

NOTE:

1. FOR ACCURATE RIGHT OF WAY DATA, CONTACT RIGHT OF WAY ENGINEERING AT THE DISTRICT OFFICE.

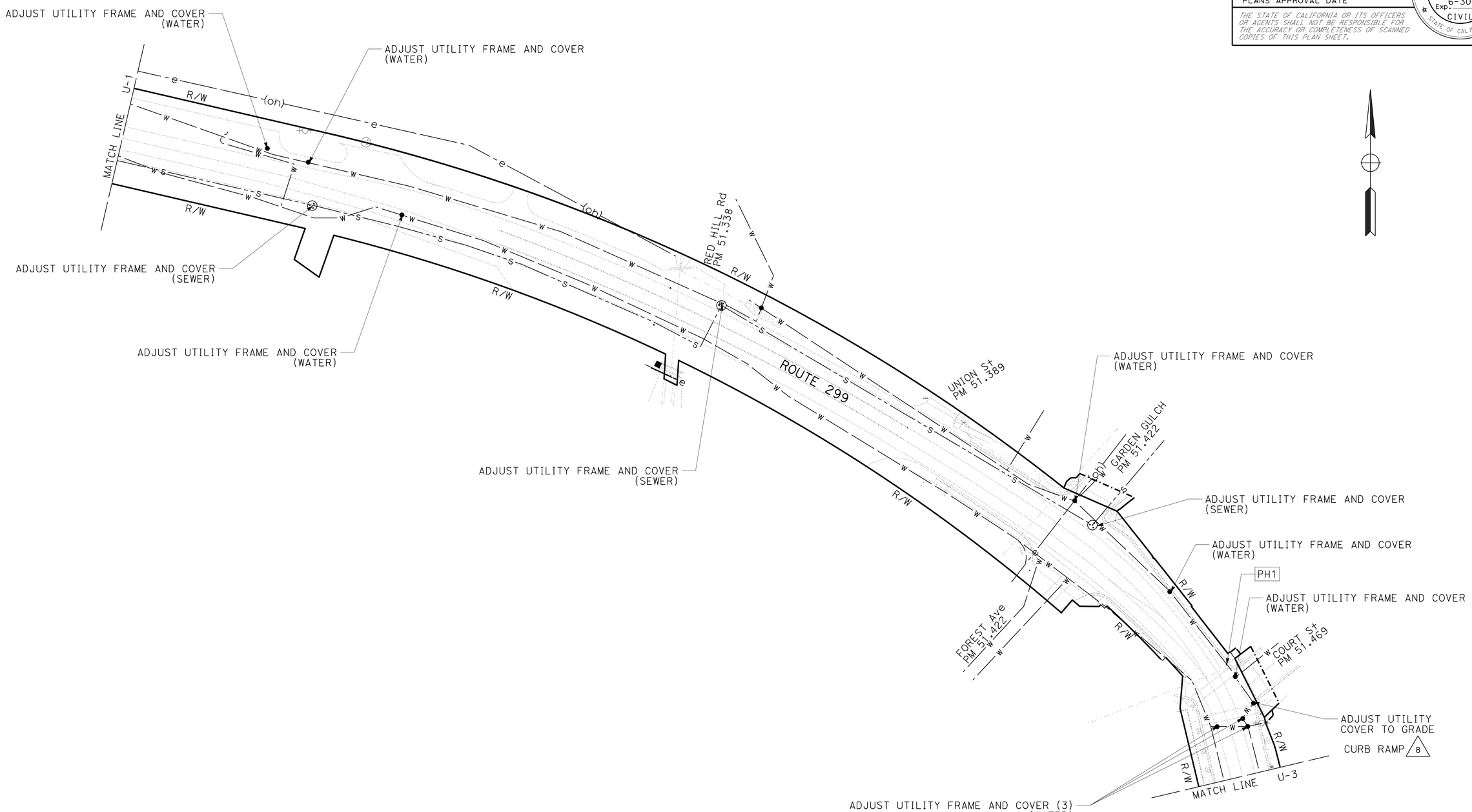

UTILITY PLAN

SCALE: 1" = 50'

U-2

APPROVED FOR UTILITY WORK ONLY

STATE OF CALIFORNIA - DEPARTMENT OF TRANSPORTATION
Caltrans DESIGN

FUNCTIONAL SUPERVISOR: JULIE CASEY
CALCULATED-DESIGNED BY: JEANNIE STEFFAN
CHECKED BY: HEIDI BORDERS
REVISED BY
DATE REVISED

P:\proj1\02\3E770_plans\pse\23e770ka002.dgn

LAST REVISION 11-25-14
DATE PLOTTED => 15-JAN-2015
TIME PLOTTED => 16:09

BORDER LAST REVISED 7/2/2010
USERNAME => s123119
DGN FILE => 23e770ka002.dgn
RELATIVE BORDER SCALE IS IN INCHES 0 1 2 3
UNIT 0318
PROJECT NUMBER & PHASE: 02-1500-0046-1 EA: 3E7711

Dist	COUNTY	ROUTE	POST MILES TOTAL PROJECT	SHEET No.	TOTAL SHEETS
02	Tri	299	36.9/53.5	77	165

Heidi Borders 11-25-14
REGISTERED CIVIL ENGINEER DATE

11-26-14
PLANS APPROVAL DATE

REGISTERED PROFESSIONAL ENGINEER
HEIDI E. BORDERS
No. C64194
Exp. 6-30-15
CIVIL
STATE OF CALIFORNIA

THE STATE OF CALIFORNIA OR ITS OFFICERS OR AGENTS SHALL NOT BE RESPONSIBLE FOR THE ACCURACY OR COMPLETENESS OF SCANNED COPIES OF THIS PLAN SHEET.

NOTE:

1. FOR ACCURATE RIGHT OF WAY DATA, CONTACT RIGHT OF WAY ENGINEERING AT THE DISTRICT OFFICE.

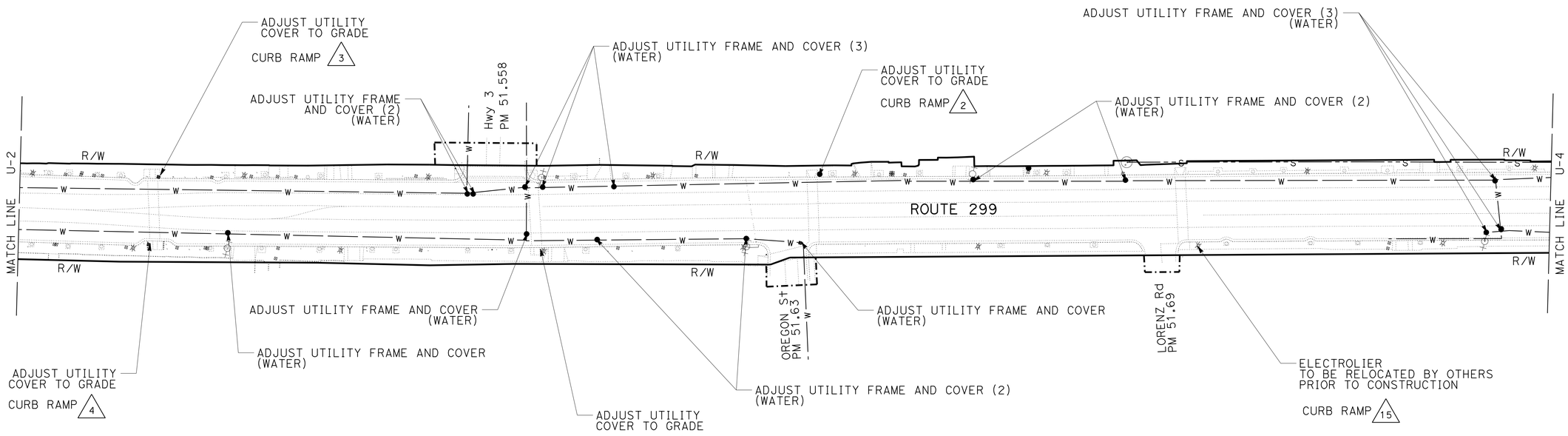

UTILITY PLAN

SCALE: 1" = 50'

U-3

APPROVED FOR UTILITY WORK ONLY

STATE OF CALIFORNIA - DEPARTMENT OF TRANSPORTATION
DESIGN

FUNCTIONAL SUPERVISOR: JULIE CASEY
CALCULATED-DESIGNED BY: JEANNIE STEFFAN
CHECKED BY: HEIDI BORDERS
REVISED BY
DATE REVISED

P:\proj1\02\3E770_plans\pse\23e770ka003.dgn

LAST REVISION 11-25-14
DATE PLOTTED => 15-JAN-2015
TIME PLOTTED => 16:09

Dist	COUNTY	ROUTE	POST MILES TOTAL PROJECT	SHEET No.	TOTAL SHEETS
02	Tri	299	36.9/53.5	78	165

Heidi Borders 11-25-14
REGISTERED CIVIL ENGINEER DATE

11-26-14
PLANS APPROVAL DATE

REGISTERED PROFESSIONAL ENGINEER
HEIDI E. BORDERS
No. C64194
Exp. 6-30-15
CIVIL
STATE OF CALIFORNIA

THE STATE OF CALIFORNIA OR ITS OFFICERS OR AGENTS SHALL NOT BE RESPONSIBLE FOR THE ACCURACY OR COMPLETENESS OF SCANNED COPIES OF THIS PLAN SHEET.

NOTE:

1. FOR ACCURATE RIGHT OF WAY DATA, CONTACT RIGHT OF WAY ENGINEERING AT THE DISTRICT OFFICE.

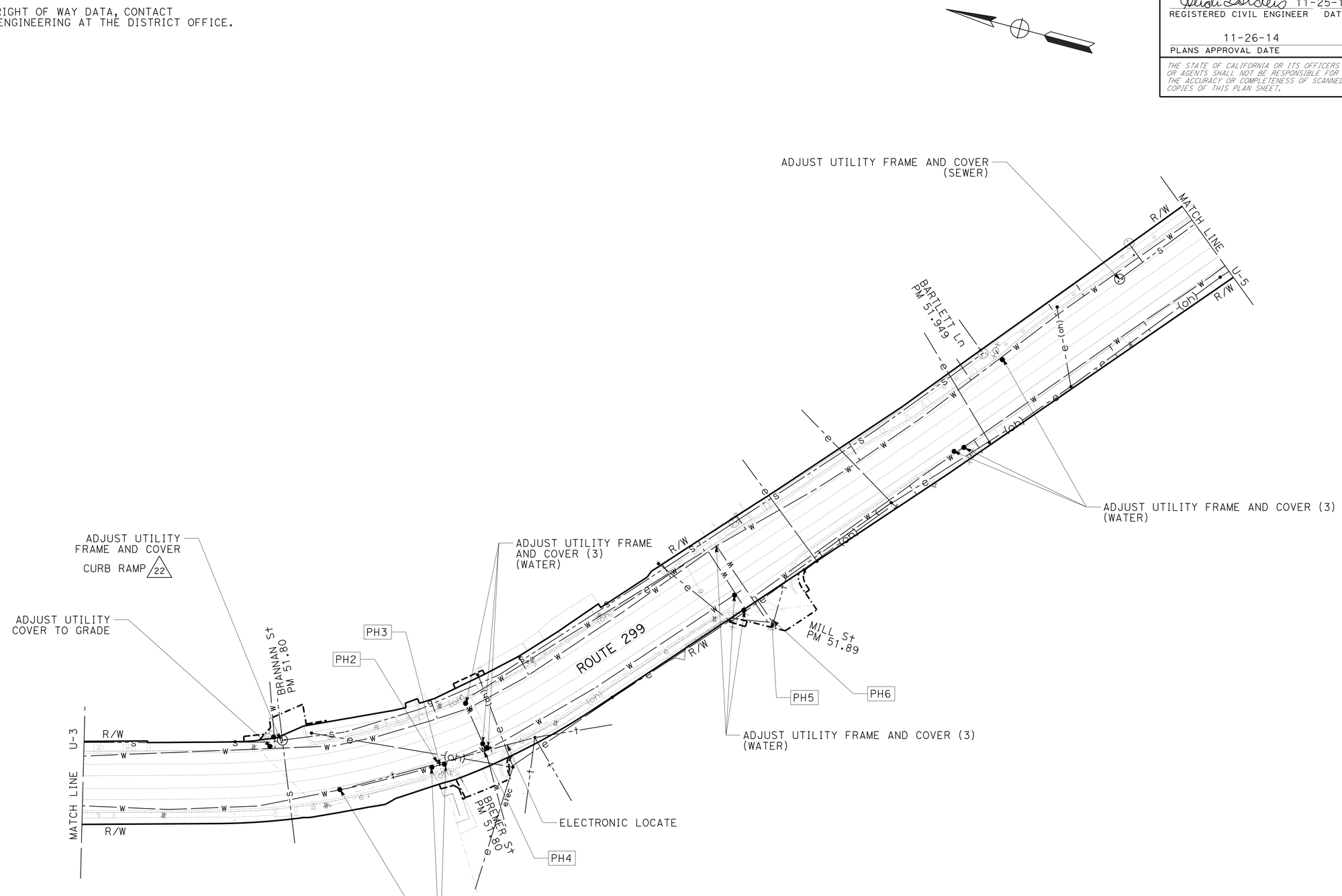

APPROVED FOR UTILITY WORK ONLY

UTILITY PLAN

SCALE: 1" = 50'

U-4

REVISED BY	DATE REVISED

CALCULATED-DESIGNED BY: JEANNIE STEFFAN
CHECKED BY: HEIDI BORDERS

FUNCTIONAL SUPERVISOR: JULIE CASEY

STATE OF CALIFORNIA - DEPARTMENT OF TRANSPORTATION
Caltrans
DESIGN

P:\proj1\02\3E770_plans\pse\23e770ka004.dgn

LAST REVISION 11-25-14 | DATE PLOTTED => 15-JAN-2015 | TIME PLOTTED => 16:09

Dist	COUNTY	ROUTE	POST MILES TOTAL PROJECT	SHEET No.	TOTAL SHEETS
02	Tri	299	36.9/53.5	79	165

Heidi Borders 11-25-14
REGISTERED CIVIL ENGINEER DATE

11-26-14
PLANS APPROVAL DATE

REGISTERED PROFESSIONAL ENGINEER HEIDI E. BORDERS No. C64194 Exp. 6-30-15 CIVIL STATE OF CALIFORNIA

THE STATE OF CALIFORNIA OR ITS OFFICERS OR AGENTS SHALL NOT BE RESPONSIBLE FOR THE ACCURACY OR COMPLETENESS OF SCANNED COPIES OF THIS PLAN SHEET.

NOTE:

1. FOR ACCURATE RIGHT OF WAY DATA, CONTACT RIGHT OF WAY ENGINEERING AT THE DISTRICT OFFICE.

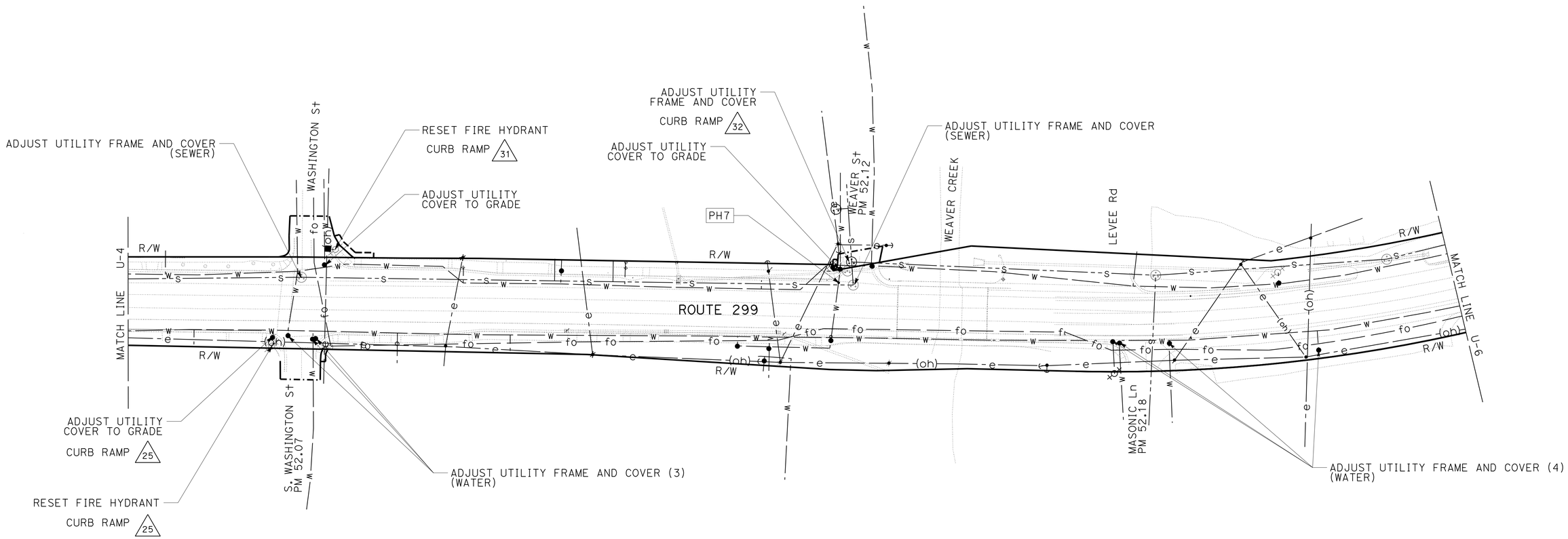

UTILITY PLAN

SCALE: 1" = 50'

U-5

APPROVED FOR UTILITY WORK ONLY

REVISED BY	JEANNIE STEFFAN
DATE REVISED	HEIDI BORDERS
CALCULATED-DESIGNED BY	
CHECKED BY	
FUNCTIONAL SUPERVISOR	JULIE CASEY

STATE OF CALIFORNIA - DEPARTMENT OF TRANSPORTATION
Caltrans
DESIGN

P:\proj1\02\3E770_plans\pse\23e770ka005.dgn

LAST REVISION 11-25-14 | DATE PLOTTED => 15-JAN-2015 | TIME PLOTTED => 16:09

Dist	COUNTY	ROUTE	POST MILES TOTAL PROJECT	SHEET No.	TOTAL SHEETS
02	Tri	299	36.9/53.5	80	165

Heidi Borders 11-25-14
REGISTERED CIVIL ENGINEER DATE

11-26-14
PLANS APPROVAL DATE

REGISTERED PROFESSIONAL ENGINEER
HEIDI E. BORDERS
No. C64194
Exp. 6-30-15
CIVIL
STATE OF CALIFORNIA

THE STATE OF CALIFORNIA OR ITS OFFICERS OR AGENTS SHALL NOT BE RESPONSIBLE FOR THE ACCURACY OR COMPLETENESS OF SCANNED COPIES OF THIS PLAN SHEET.

NOTE:

1. FOR ACCURATE RIGHT OF WAY DATA, CONTACT RIGHT OF WAY ENGINEERING AT THE DISTRICT OFFICE.

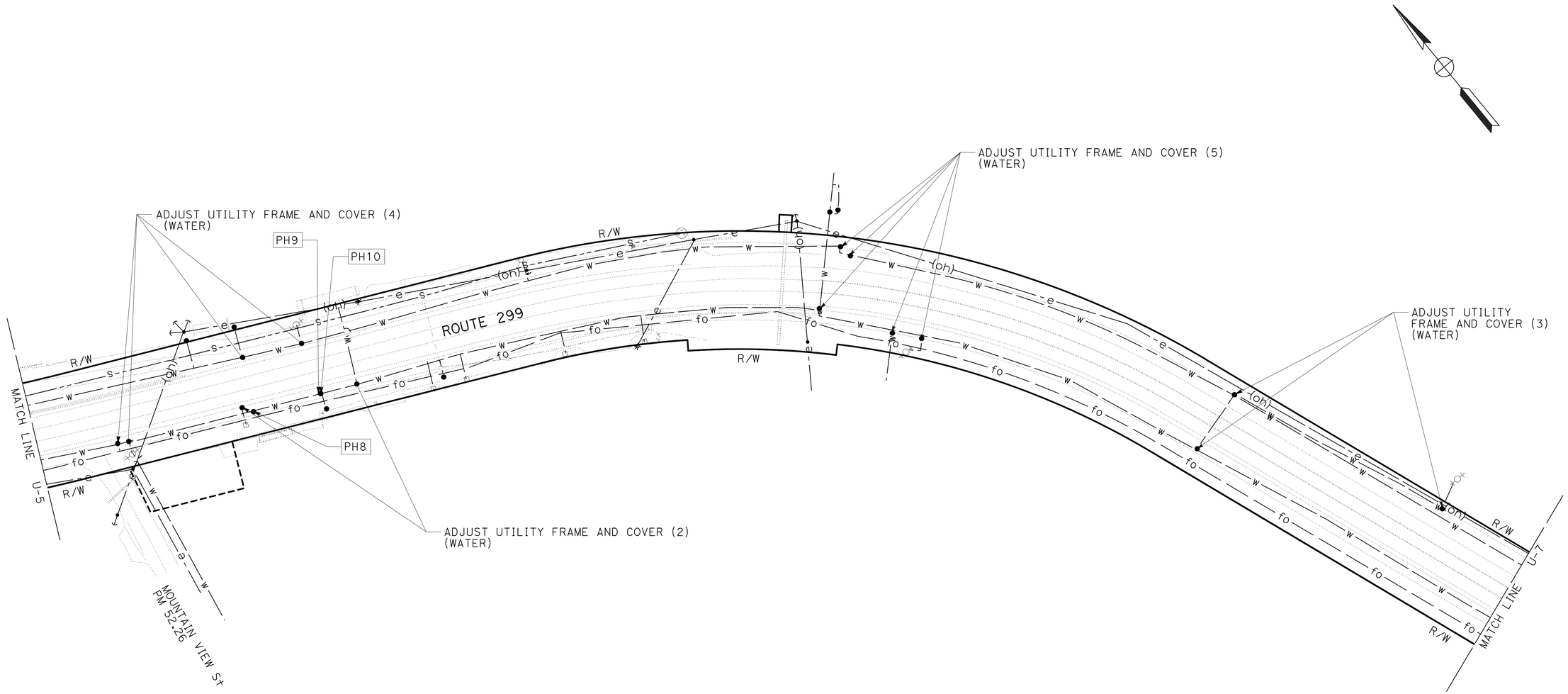

UTILITY PLAN

SCALE: 1" = 50'

U-6

APPROVED FOR UTILITY WORK ONLY

STATE OF CALIFORNIA - DEPARTMENT OF TRANSPORTATION
Caltrans
DESIGN

FUNCTIONAL SUPERVISOR: JULIE CASEY
CALCULATED-DESIGNED BY: JEANNIE STEFFAN
CHECKED BY: HEIDI BORDERS
REVISED BY
DATE REVISED

P:\proj1\02\3E770_plans\pse\23e770ka006.dgn

LAST REVISION 11-25-14
DATE PLOTTED => 15-JAN-2015
TIME PLOTTED => 16:09

BORDER LAST REVISED 7/2/2010
USERNAME => s123119
DGN FILE => 23e770ka006.dgn
RELATIVE BORDER SCALE IS IN INCHES 0 1 2 3
UNIT 0318
PROJECT NUMBER & PHASE: 02-1500-0046-1 EA: 3E7711

Dist	COUNTY	ROUTE	POST MILES TOTAL PROJECT	SHEET No.	TOTAL SHEETS
02	Tri	299	36.9/53.5	81	165

Heidi Borders 11-25-14
REGISTERED CIVIL ENGINEER DATE

11-26-14
PLANS APPROVAL DATE

REGISTERED PROFESSIONAL ENGINEER
HEIDI E. BORDERS
No. C64194
Exp. 6-30-15
CIVIL
STATE OF CALIFORNIA

THE STATE OF CALIFORNIA OR ITS OFFICERS OR AGENTS SHALL NOT BE RESPONSIBLE FOR THE ACCURACY OR COMPLETENESS OF SCANNED COPIES OF THIS PLAN SHEET.

NOTE:

1. FOR ACCURATE RIGHT OF WAY DATA, CONTACT RIGHT OF WAY ENGINEERING AT THE DISTRICT OFFICE.

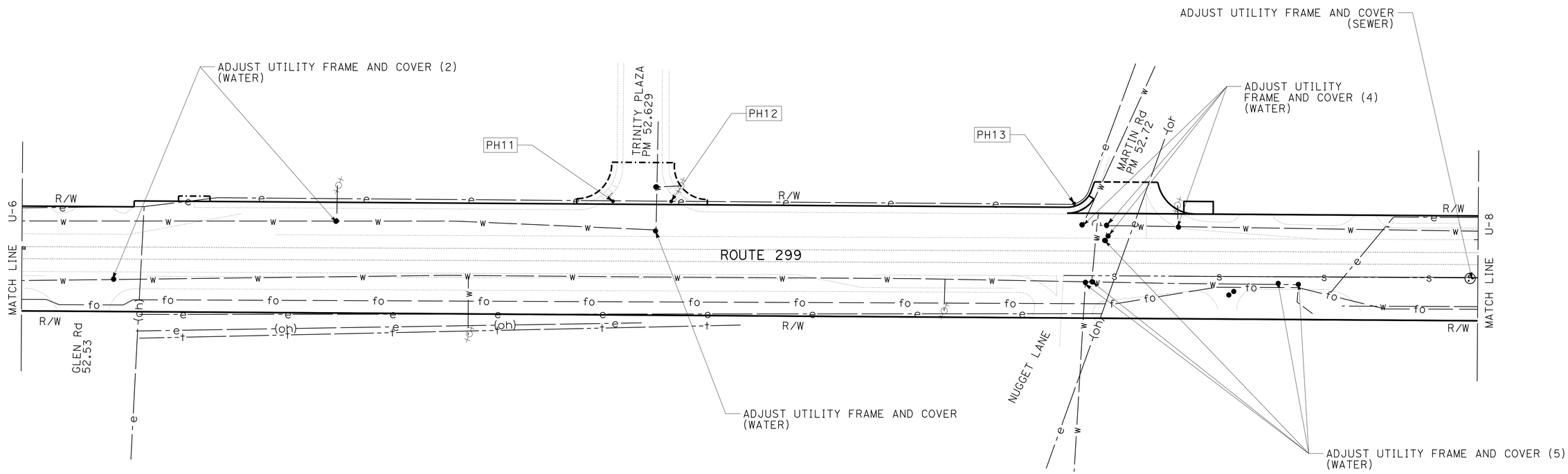

UTILITY PLAN

SCALE: 1" = 50'

U-7

APPROVED FOR UTILITY WORK ONLY

STATE OF CALIFORNIA - DEPARTMENT OF TRANSPORTATION
Caltrans DESIGN

FUNCTIONAL SUPERVISOR: JULIE CASEY
CALCULATED-DESIGNED BY: JEANNIE STEFFAN
CHECKED BY: HEIDI BORDERS
REVISED BY
DATE REVISED

P:\proj1\02\3E770_plans\pse\23e770ka007.dgn

LAST REVISION DATE PLOTTED => 15-JAN-2015
11-25-14 TIME PLOTTED => 16:09

BORDER LAST REVISED 7/2/2010
USERNAME => s123119
DGN FILE => 23e770ka007.dgn
RELATIVE BORDER SCALE IS IN INCHES 0 1 2 3
UNIT 0318
PROJECT NUMBER & PHASE: 02-1500-0046-1 EA: 3E7711

Dist	COUNTY	ROUTE	POST MILES TOTAL PROJECT	SHEET No.	TOTAL SHEETS
02	Tri	299	36.9/53.5	82	165

Heidi Borders 11-25-14
REGISTERED CIVIL ENGINEER DATE

11-26-14
PLANS APPROVAL DATE

REGISTERED PROFESSIONAL ENGINEER
HEIDI E. BORDERS
No. C64194
Exp. 6-30-15
CIVIL
STATE OF CALIFORNIA

THE STATE OF CALIFORNIA OR ITS OFFICERS OR AGENTS SHALL NOT BE RESPONSIBLE FOR THE ACCURACY OR COMPLETENESS OF SCANNED COPIES OF THIS PLAN SHEET.

NOTE:

1. FOR ACCURATE RIGHT OF WAY DATA, CONTACT RIGHT OF WAY ENGINEERING AT THE DISTRICT OFFICE.

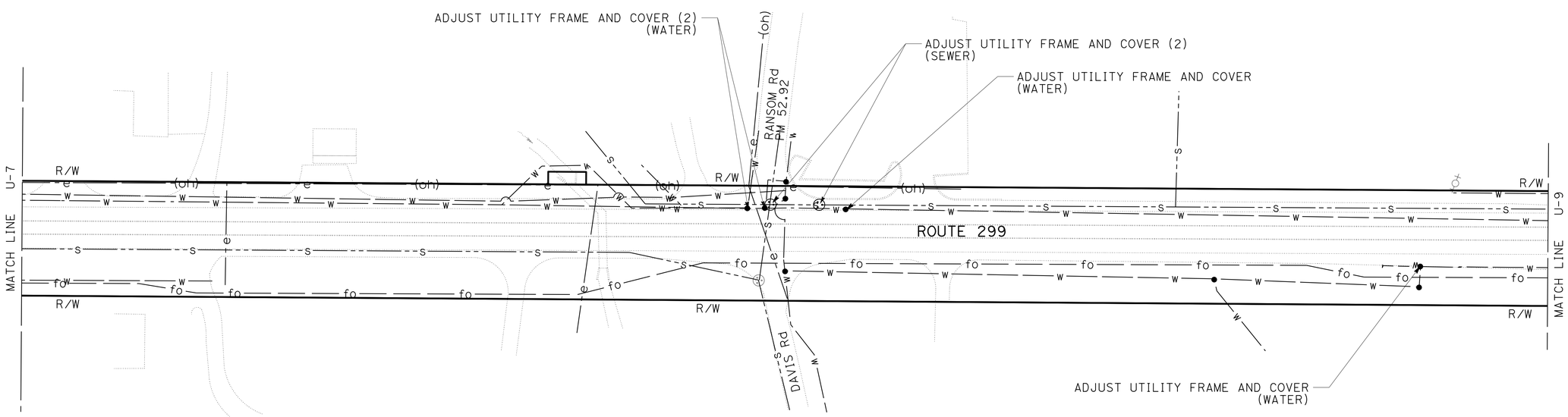

UTILITY PLAN

SCALE: 1" = 50'

U-8

APPROVED FOR UTILITY WORK ONLY

REVISED BY | DATE REVISED

JEANNIE STEFFAN | HEIDI BORDERS

CALCULATED-DESIGNED BY | CHECKED BY

FUNCTIONAL SUPERVISOR: JULIE CASEY

STATE OF CALIFORNIA - DEPARTMENT OF TRANSPORTATION

Caltrans® DESIGN

P:\proj1\02\3E770_plans\pse\23e770ka008.dgn

LAST REVISION | DATE PLOTTED => 15-JAN-2015 | TIME PLOTTED => 16:09

BORDER LAST REVISED 7/2/2010 | USERNAME => s123119 | DGN FILE => 23e770ka008.dgn | RELATIVE BORDER SCALE IS IN INCHES 0 1 2 3 | UNIT 0318 | PROJECT NUMBER & PHASE: 02-1500-0046-1 EA: 3E7711

Dist	COUNTY	ROUTE	POST MILES TOTAL PROJECT	SHEET No.	TOTAL SHEETS
02	Tri	299	36.9/53.5	83	165

Heidi Borders 11-25-14
REGISTERED CIVIL ENGINEER DATE

11-26-14
PLANS APPROVAL DATE

REGISTERED PROFESSIONAL ENGINEER
HEIDI E. BORDERS
No. C64194
Exp. 6-30-15
CIVIL
STATE OF CALIFORNIA

THE STATE OF CALIFORNIA OR ITS OFFICERS OR AGENTS SHALL NOT BE RESPONSIBLE FOR THE ACCURACY OR COMPLETENESS OF SCANNED COPIES OF THIS PLAN SHEET.

NOTE:

1. FOR ACCURATE RIGHT OF WAY DATA, CONTACT RIGHT OF WAY ENGINEERING AT THE DISTRICT OFFICE.

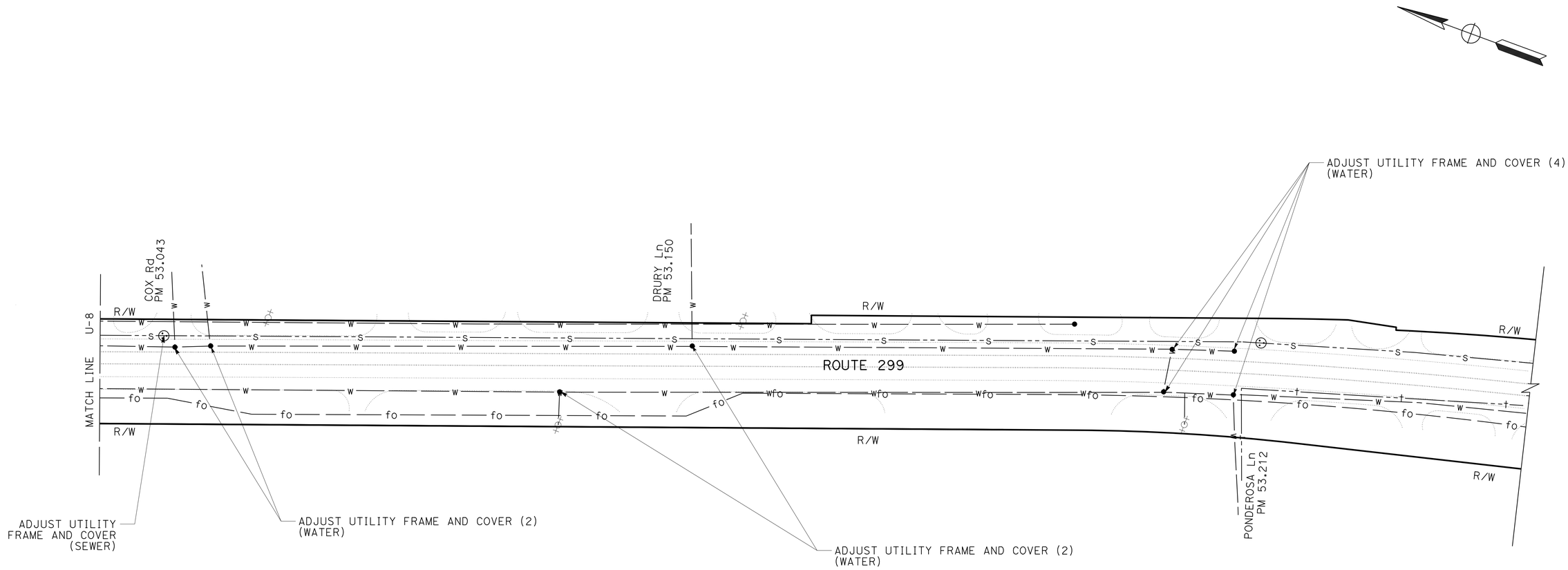

UTILITY PLAN

SCALE: 1" = 50'

U-9

APPROVED FOR UTILITY WORK ONLY

REVISED BY | DATE REVISED

JEANNIE STEFFAN | HEIDI BORDERS

CALCULATED-DESIGNED BY | CHECKED BY

FUNCTIONAL SUPERVISOR: JULIE CASEY

STATE OF CALIFORNIA - DEPARTMENT OF TRANSPORTATION

Caltrans® **DESIGN**

P:\proj1\02\3E770_plans\pse\23e770ka009.dgn

LAST REVISION | DATE PLOTTED => 15-JAN-2015
11-25-14 | TIME PLOTTED => 16:09

Dist	COUNTY	ROUTE	POST MILES TOTAL PROJECT	SHEET No.	TOTAL SHEETS
02	Tri	299	36.9/53.5	84	165

Heidi Borders 11-25-14
REGISTERED CIVIL ENGINEER DATE

11-26-14
PLANS APPROVAL DATE

REGISTERED PROFESSIONAL ENGINEER
HEIDI E. BORDERS
No. C64194
Exp. 6-30-15
CIVIL
STATE OF CALIFORNIA

THE STATE OF CALIFORNIA OR ITS OFFICERS OR AGENTS SHALL NOT BE RESPONSIBLE FOR THE ACCURACY OR COMPLETENESS OF SCANNED COPIES OF THIS PLAN SHEET.

ABBREVIATIONS;

MJ MECHANICAL JOINT

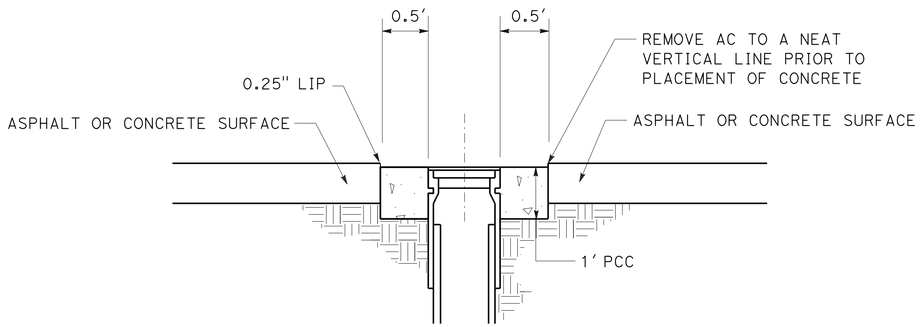

ADJUST UTILITY COVER TO GRADE

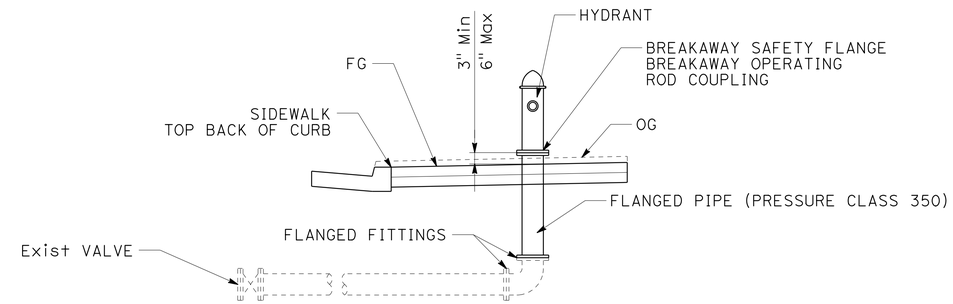

RESET FIRE HYDRANT

FITTINGS SHALL NOT BE RENDERED INACCESSIBLE BY THE CONCRETE.
CLEARANCE SHALL BE PROVIDED FOR BOLT REMOVAL.

UTILITY QUANTITIES

	RESET FIRE HYDRANT	ADJUST UTILITY COVER TO GRADE	ADJUST UTILITY FRAME AND COVER
	EA	EA	EA
TOTAL	2	9	99

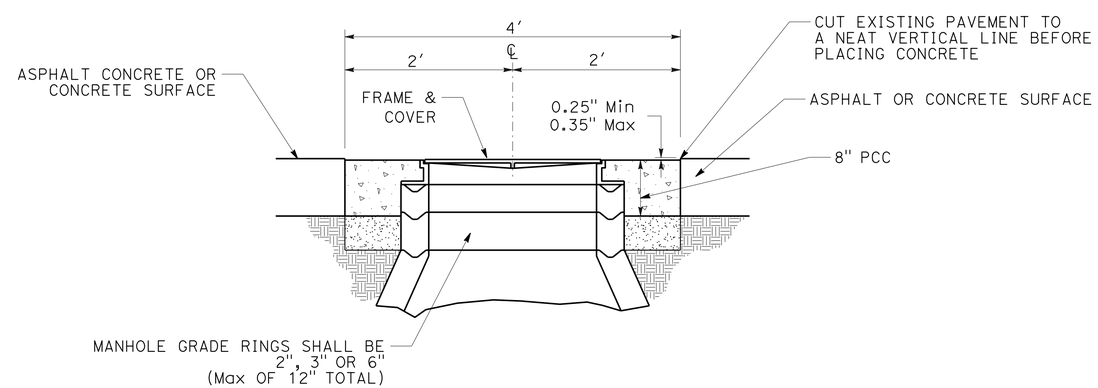

ADJUST UTILITY FRAME AND COVER

UTILITY DETAILS AND QUANTITIES

NO SCALE

UD-1

REVISED BY | DATE REVISED
JEANNIE STEFFAN | HEIDI BORDERS
CALCULATED-DESIGNED BY | CHECKED BY
FUNCTIONAL SUPERVISOR
JULIE CASEY

STATE OF CALIFORNIA - DEPARTMENT OF TRANSPORTATION
Caltrans
DESIGN

P:\proj1\02\3E770_plans\pse\23e770kb001.dgn

LAST REVISION 11-25-14 | DATE PLOTTED => 15-JAN-2015 | TIME PLOTTED => 16:09

Dist	COUNTY	ROUTE	POST MILES TOTAL PROJECT	SHEET No.	TOTAL SHEETS
02	Tri	299	36.9/53.5	85	165

Heidi Borders 11-25-14
REGISTERED CIVIL ENGINEER DATE

11-26-14
PLANS APPROVAL DATE

REGISTERED PROFESSIONAL ENGINEER HEIDI E. BORDERS No. C64194 Exp. 6-30-15 CIVIL STATE OF CALIFORNIA

THE STATE OF CALIFORNIA OR ITS OFFICERS OR AGENTS SHALL NOT BE RESPONSIBLE FOR THE ACCURACY OR COMPLETENESS OF SCANNED COPIES OF THIS PLAN SHEET.

NOTE:

1. EXACT LOCATION OF ALL SIGNS TO BE DETERMINED BY THE ENGINEER.

CONSTRUCTION AREA SIGNS (STATIONARY MOUNTED)

TYPE	CODE	PANEL SIZE	SIGN MESSAGE	No. AND SIZE OF POSTS	No. OF SIGNS
A	G20-1 C23B	36" x 18" 36" x 24"	ROAD WORK AHEAD NEXT XX MILES PAVEMENT MAINTENANCE	1 - 4" x 6"	10
B	G20-2	36" x 18"	END ROAD WORK	1 - 4" x 4"	4
C	W20-1	48" x 48"	ROAD WORK AHEAD	1 - 4" x 6"	47

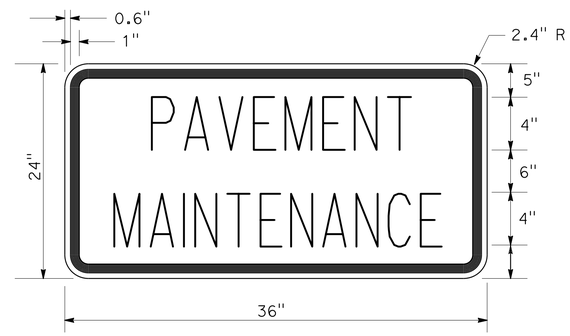

C23B SIGN PANEL DETAIL

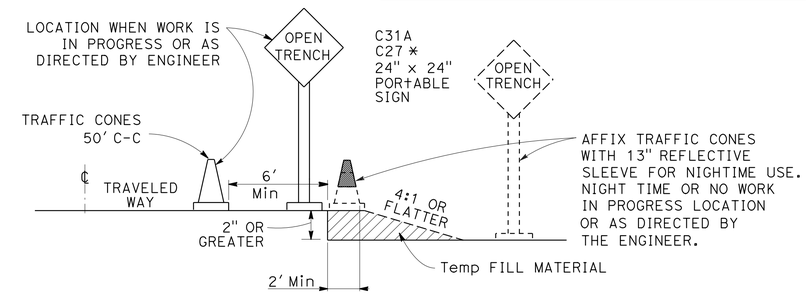

OPEN TRENCH SIGNING AND MARKING

* PLACE AT 250' INTERVALS THROUGH THE OPEN TRENCH AREA, ALTERNATE C27 (OPEN TRENCH) AND C31A (NO SHOULDER) SIGNS

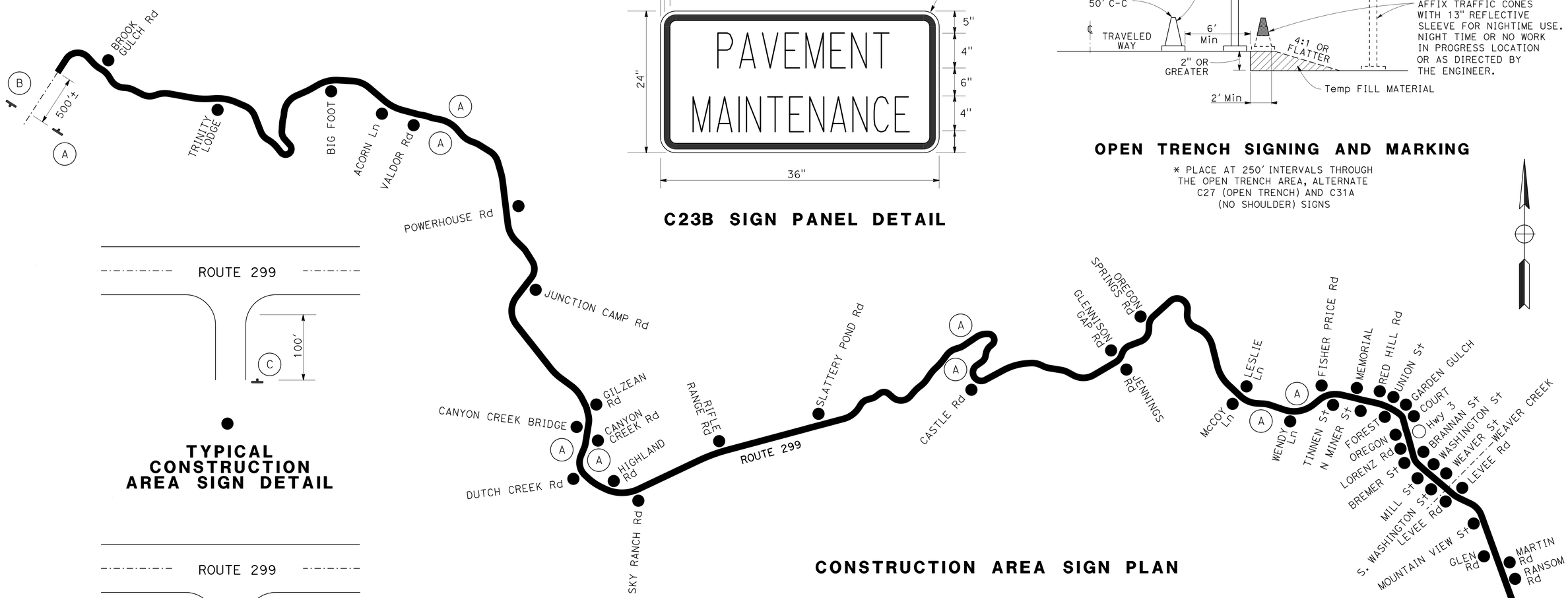

CONSTRUCTION AREA SIGN PLAN

TYPICAL CONSTRUCTION AREA SIGN DETAIL

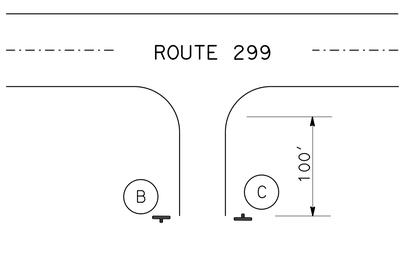

TYPICAL ROAD CONNECTION CONSTRUCTION AREA SIGN DETAIL

CONSTRUCTION AREA SIGNS

NO SCALE

CS-1

REVISED BY | DATE REVISED
JEANNIE STEFFAN | HEIDI BORDERS
CALCULATED-DESIGNED BY | CHECKED BY
FUNCTIONAL SUPERVISOR: JULIE CASEY

STATE OF CALIFORNIA - DEPARTMENT OF TRANSPORTATION
Caltrans
DESIGN

P:\proj\02\3E770_plans\pse\23e7701a001.dgn

LAST REVISION 11-25-14 | DATE PLOTTED => 15-JAN-2015 | TIME PLOTTED => 16:09

Dist	COUNTY	ROUTE	POST MILES TOTAL PROJECT	SHEET No.	TOTAL SHEETS
02	Tri	299	36.9/53.5	86	165

Heidi Borders 11-25-14
REGISTERED CIVIL ENGINEER DATE

11-26-14
PLANS APPROVAL DATE

REGISTERED PROFESSIONAL ENGINEER
HEIDI E. BORDERS
No. C64194
Exp. 6-30-15
CIVIL
STATE OF CALIFORNIA

THE STATE OF CALIFORNIA OR ITS OFFICERS OR AGENTS SHALL NOT BE RESPONSIBLE FOR THE ACCURACY OR COMPLETENESS OF SCANNED COPIES OF THIS PLAN SHEET.

LEGEND:

- No. — PAVEMENT DELINEATION STRIPE DETAIL No.
- BIKE LANE SYMBOL WITH PERSON
- PREFORMED THERMOPLASTIC PAVEMENT MARKING MATERIAL (TRAFFIC CALMING)

ABBREVIATIONS:

XW CROSSWALK 12" WHITE LINE

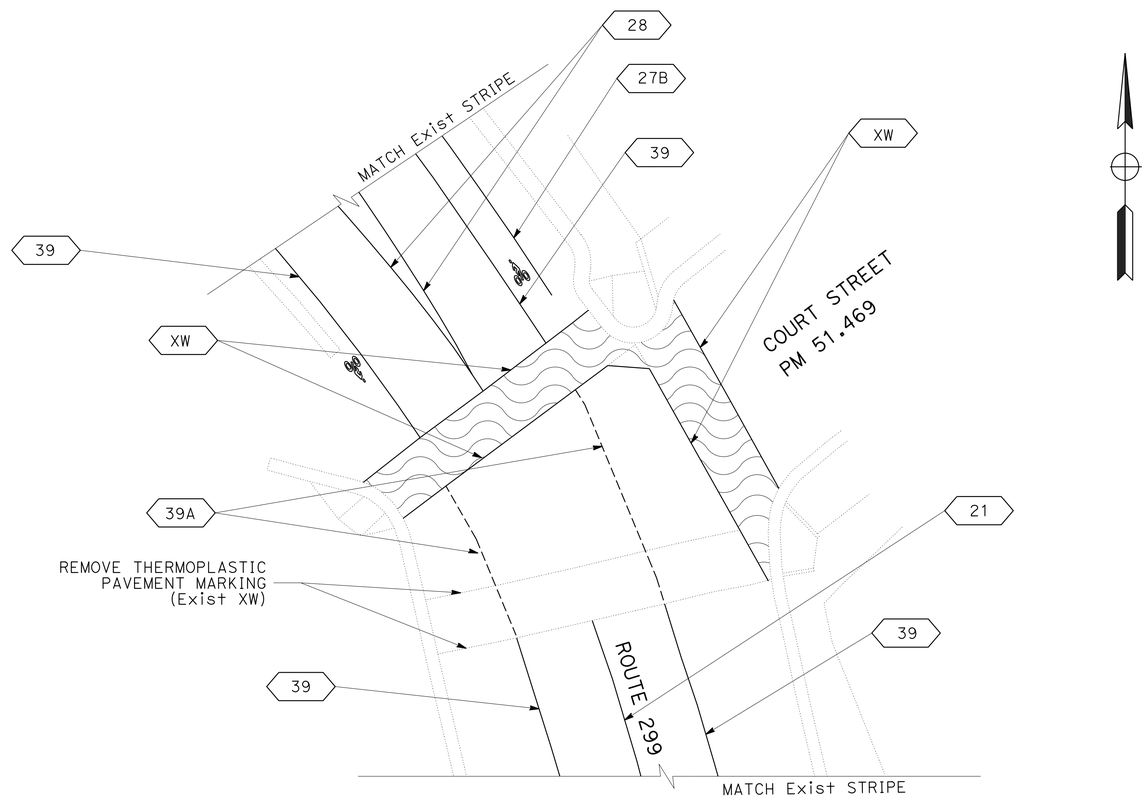

COURT STREET CROSSWALKS

PAVEMENT DELINEATION DETAILS

NO SCALE

PDD-1

STATE OF CALIFORNIA - DEPARTMENT OF TRANSPORTATION
Caltrans® DESIGN

FUNCTIONAL SUPERVISOR: JULIE CASEY
CALCULATED-DESIGNED BY: JEANNIE STEFFAN
CHECKED BY: HEIDI BORDERS
REVISED BY
DATE REVISED

P:\proj1\02\3E770_plans\pse\23e770nb001.dgn

LAST REVISION 11-25-14 | DATE PLOTTED => 15-JAN-2015 | TIME PLOTTED => 16:09

BORDER LAST REVISED 7/2/2010 | USERNAME => s123119 | DGN FILE => 23e770nb001.dgn | RELATIVE BORDER SCALE IS IN INCHES 0 1 2 3 | UNIT 0318 | PROJECT NUMBER & PHASE: 02-1500-0046-1 EA: 3E7711

Dist	COUNTY	ROUTE	POST MILES TOTAL PROJECT	SHEET No.	TOTAL SHEETS
02	Tri	299	36.9/53.5	87	165

Heidi Borders 11-25-14
REGISTERED CIVIL ENGINEER DATE

11-26-14
PLANS APPROVAL DATE

REGISTERED PROFESSIONAL ENGINEER
HEIDI E. BORDERS
No. C64194
Exp. 6-30-15
CIVIL
STATE OF CALIFORNIA

THE STATE OF CALIFORNIA OR ITS OFFICERS OR AGENTS SHALL NOT BE RESPONSIBLE FOR THE ACCURACY OR COMPLETENESS OF SCANNED COPIES OF THIS PLAN SHEET.

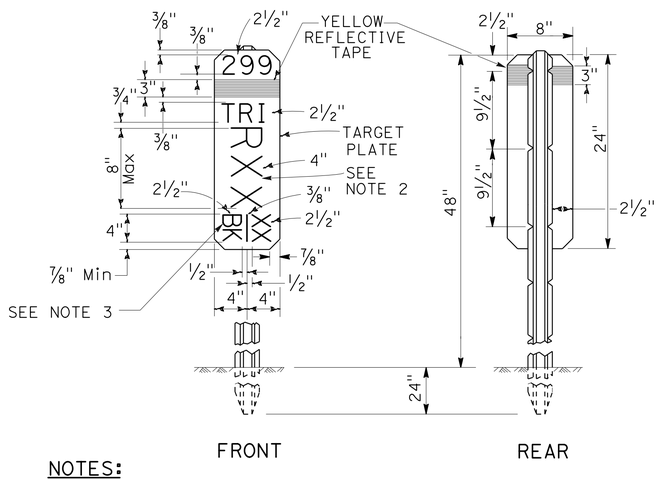

NOTES:

1. THE MARKER SHALL BE WHITE (NON-REFLECTIVE) TARGET PLATE WITH BLACK SERIES D NUMERALS AND LETTERS.
2. A POST MILE PREFIX, SUCH AS "R", SHALL APPLY ONLY WHEN DIRECTED BY THE ENGINEER.
3. "BK" (BACK), "AH" (AHEAD), OR A BLANK SPACE SHALL APPLY AS DIRECTED BY THE ENGINEER.
4. ALL INFORMATION SHALL BE IN ENGLISH UNITS (MILES).

MILE POST MARKER DETAIL

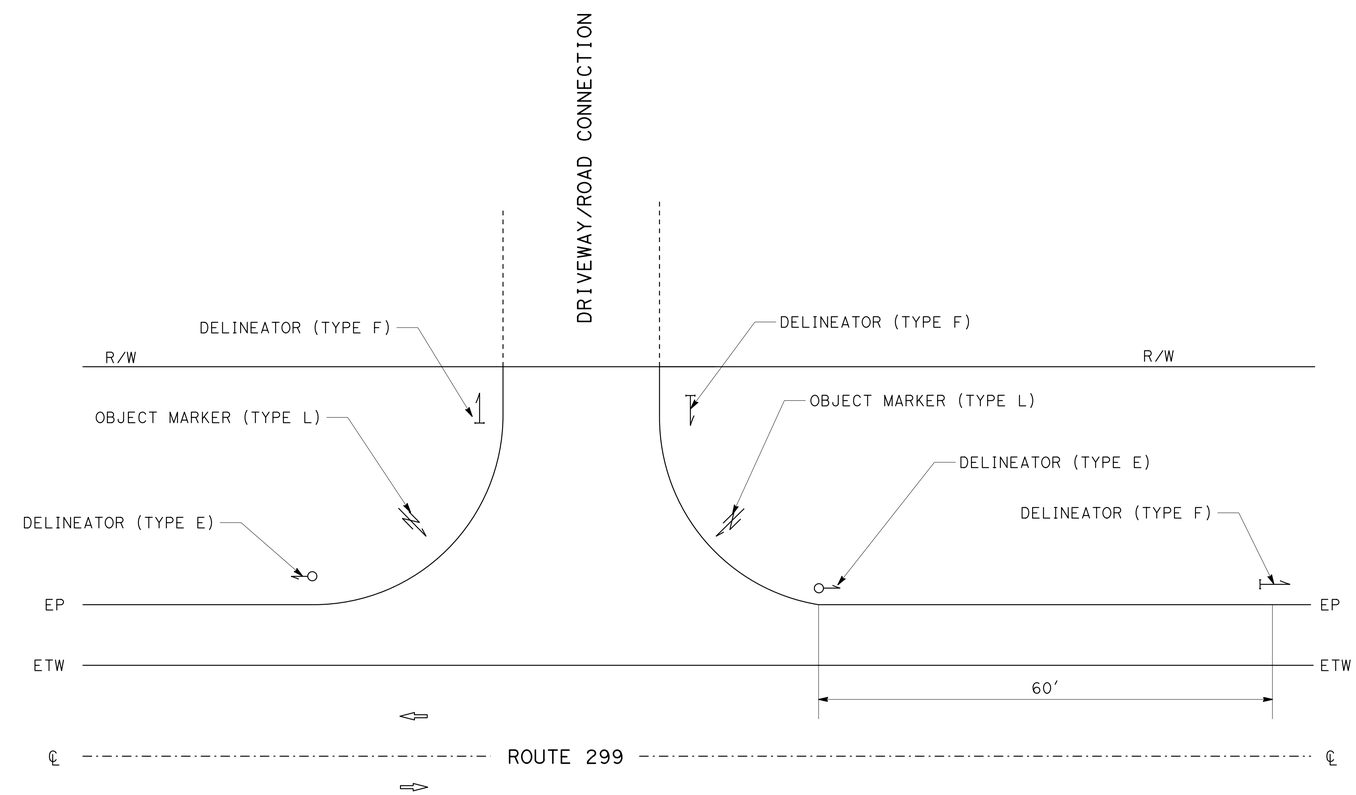

DRIVEWAY / ROAD CONNECTION DELINEATOR PLACEMENT DETAIL

PAVEMENT DELINEATION DETAILS

NO SCALE

PDD-2

JEANNIE STEFFAN — REVISED BY
HEIDI BORDERS — DATE REVISED
CALCULATED-DESIGNED BY
CHECKED BY
JULIE CASEY — FUNCTIONAL SUPERVISOR

STATE OF CALIFORNIA - DEPARTMENT OF TRANSPORTATION
Caltrans
DESIGN

P:\proj1\02\3E770_plans\pse\23e770nb002.dgn

LAST REVISION 11-25-14 | DATE PLOTTED => 15-JAN-2015 | TIME PLOTTED => 16:09

Dist	COUNTY	ROUTE	POST MILES TOTAL PROJECT	SHEET No.	TOTAL SHEETS
02	Tri	299	36.9/53.5	88	165

Heidi Borders 11-25-14
REGISTERED CIVIL ENGINEER DATE

11-26-14
PLANS APPROVAL DATE

REGISTERED PROFESSIONAL ENGINEER
HEIDI E. BORDERS
No. C64194
Exp. 6-30-15
CIVIL
STATE OF CALIFORNIA

THE STATE OF CALIFORNIA OR ITS OFFICERS OR AGENTS SHALL NOT BE RESPONSIBLE FOR THE ACCURACY OR COMPLETENESS OF SCANNED COPIES OF THIS PLAN SHEET.

LEGEND

XXX TRAFFIC STRIPE DETAIL No.

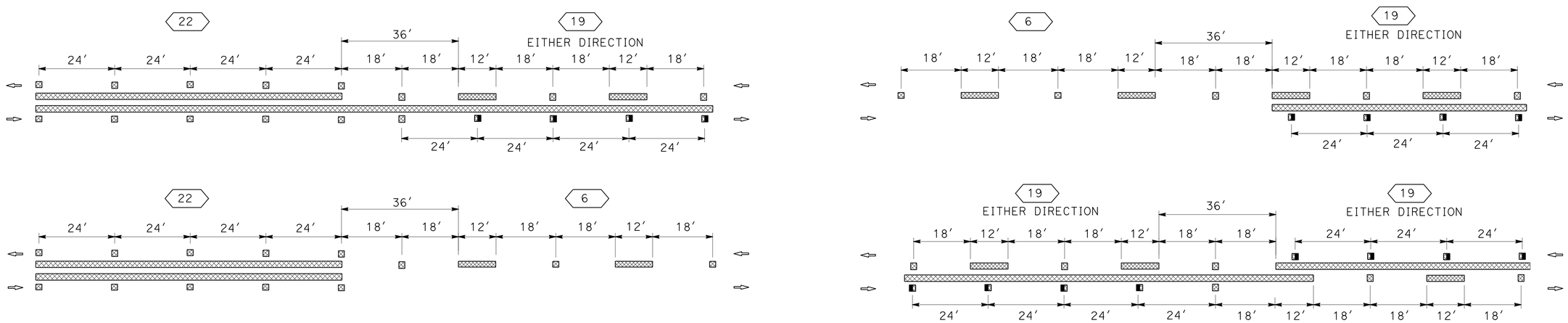

TYPICAL STRIPE TRANSITION DETAILS

PAVEMENT DELINEATION DETAILS (CONVENTIONAL ROADWAY)

NO SCALE

PDD-3

REVISED BY	DATE REVISED

CALCULATED-DESIGNED BY	CHECKED BY
JEANNIE STEFFAN	HEIDI BORDERS

FUNCTIONAL SUPERVISOR: JULIE CASEY

STATE OF CALIFORNIA - DEPARTMENT OF TRANSPORTATION
Caltrans
DESIGN

P:\proj1\02\3E770_plans\pse\23e770nb003.dgn

LAST REVISION 11-25-14 | DATE PLOTTED => 15-JAN-2015 | TIME PLOTTED => 16:09

Dist	COUNTY	ROUTE	POST MILES TOTAL PROJECT	SHEET No.	TOTAL SHEETS
02	Tri	299	36.9/53.5	89	165

Frank J. Rivas 11-25-14
REGISTERED CIVIL ENGINEER DATE

11-26-14
PLANS APPROVAL DATE

REGISTERED PROFESSIONAL ENGINEER
FRANK RIVAS
No. C53592
Exp. 6/30/15
CIVIL
STATE OF CALIFORNIA

THE STATE OF CALIFORNIA OR ITS OFFICERS OR AGENTS SHALL NOT BE RESPONSIBLE FOR THE ACCURACY OR COMPLETENESS OF SCANNED COPIES OF THIS PLAN SHEET.

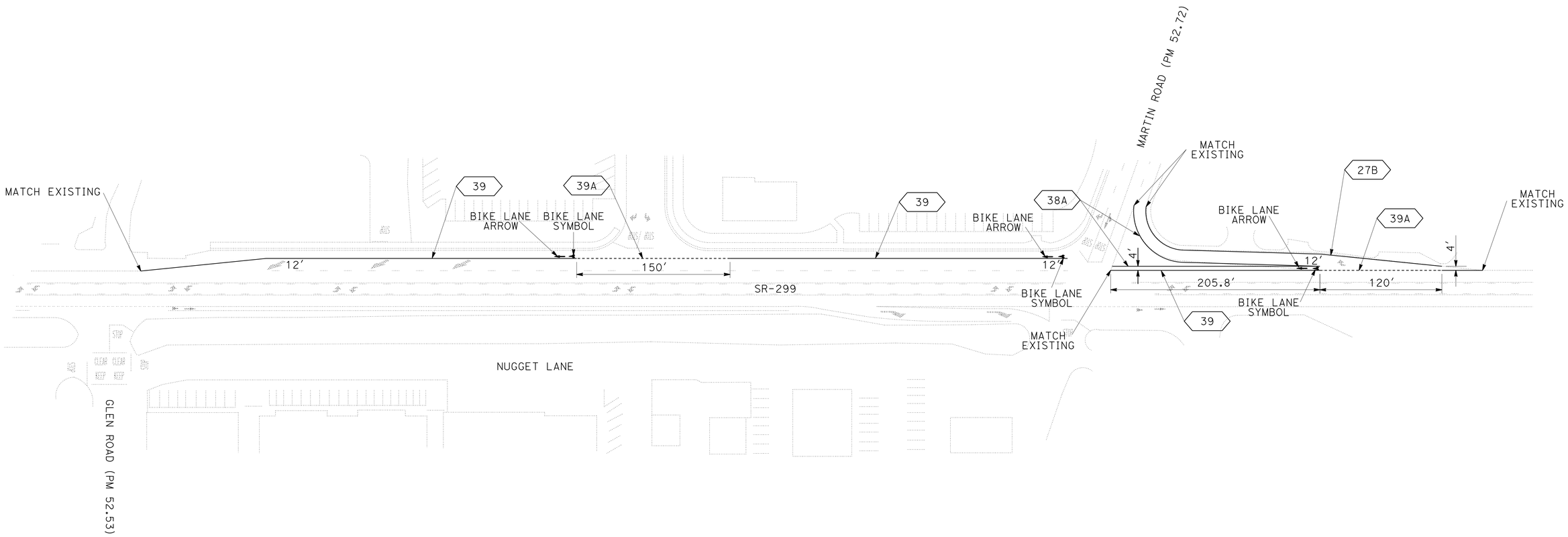

PAVEMENT DELINEATION DETAILS

NO SCALE

PDD-4

APPROVED FOR PAVEMENT DELINEATION WORK ONLY

REVISED BY | DATE REVISED
FRANK RIVAS | ROB STINGER
CALCULATED-DESIGNED BY | CHECKED BY
FUNCTIONAL SUPERVISOR: ROB STINGER

STATE OF CALIFORNIA - DEPARTMENT OF TRANSPORTATION
Caltrans® TRAFFIC OPS.

P:\proj1\02\3E770_plans\pse\23e770nb004.dgn

LAST REVISION 11-25-14 | DATE PLOTTED => 15-JAN-2015 | TIME PLOTTED => 16:09

Dist	COUNTY	ROUTE	POST MILES TOTAL PROJECT	SHEET No.	TOTAL SHEETS
02	Tri	299	36.9/53.5	90	165

Heidi Borders 11-25-14
REGISTERED CIVIL ENGINEER DATE

11-26-14
PLANS APPROVAL DATE

REGISTERED PROFESSIONAL ENGINEER
HEIDI E. BORDERS
No. C64194
Exp. 6-30-15
CIVIL
STATE OF CALIFORNIA

THE STATE OF CALIFORNIA OR ITS OFFICERS OR AGENTS SHALL NOT BE RESPONSIBLE FOR THE ACCURACY OR COMPLETENESS OF SCANNED COPIES OF THIS PLAN SHEET.

LEGEND:

No. — PAVEMENT DELINEATION STRIPE DETAIL No.

BIKE LANE SYMBOL WITH PERSON

PREFORMED THERMOPLASTIC PAVEMENT MARKING MATERIAL (TRAFFIC CALMING)

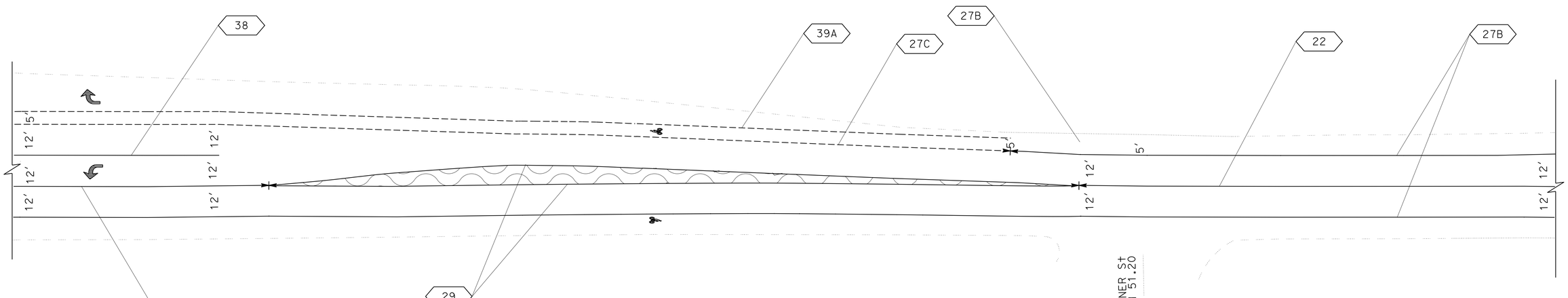

PAVEMENT DELINEATION DETAILS

NO SCALE

PDD-5

APPROVED FOR PAVEMENT DELINEATION WORK ONLY

REVISED BY	
DATE REVISED	
CALCULATED-DESIGNED BY	JEANNIE STEFFAN
CHECKED BY	HEIDI BORDERS
FUNCTIONAL SUPERVISOR	JULIE CASEY

STATE OF CALIFORNIA - DEPARTMENT OF TRANSPORTATION
Caltrans
DESIGN

P:\proj1\02\3E770_plans\pse\23e770nb005.dgn

LAST REVISION 11-25-14 | DATE PLOTTED => 15-JAN-2015 | TIME PLOTTED => 16:09

Dist	COUNTY	ROUTE	POST MILES TOTAL PROJECT	SHEET No.	TOTAL SHEETS
02	Tri	299	36.9/53.5	91	165

Heidi Borders 11-25-14
REGISTERED CIVIL ENGINEER DATE

11-26-14
PLANS APPROVAL DATE

REGISTERED PROFESSIONAL ENGINEER
HEIDI E. BORDERS
No. C64194
Exp. 6-30-15
CIVIL
STATE OF CALIFORNIA

THE STATE OF CALIFORNIA OR ITS OFFICERS OR AGENTS SHALL NOT BE RESPONSIBLE FOR THE ACCURACY OR COMPLETENESS OF SCANNED COPIES OF THIS PLAN SHEET.

LEGEND:

No. — PAVEMENT DELINEATION STRIPE DETAIL No.

BIKE LANE SYMBOL WITH PERSON

PREFORMED THERMOPLASTIC PAVEMENT MARKING MATERIAL (TRAFFIC CALMING)

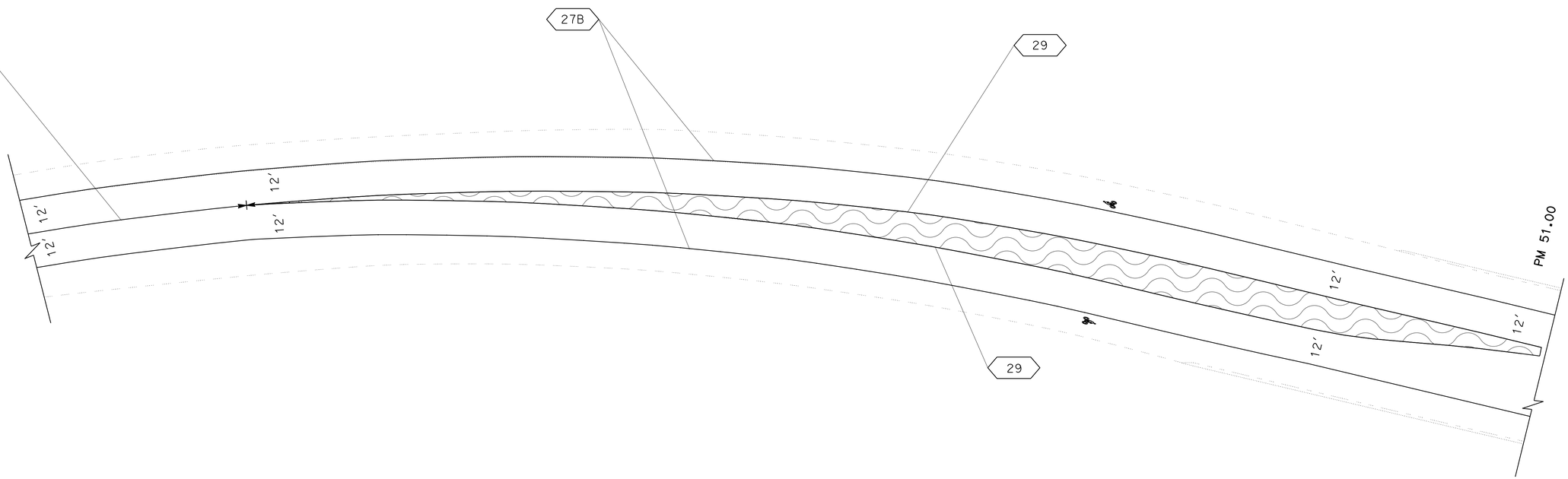

PAVEMENT DELINEATION DETAILS

NO SCALE

APPROVED FOR PAVEMENT DELINEATION WORK ONLY

PDD-6

STATE OF CALIFORNIA - DEPARTMENT OF TRANSPORTATION
Caltrans® **DESIGN**

FUNCTIONAL SUPERVISOR: JULIE CASEY
CALCULATED-DESIGNED BY: JEANNIE STEFFAN
CHECKED BY: HEIDI BORDERS
REVISED BY
DATE REVISED

P:\proj1\02\3E770_plans\pse\23e770nb006.dgn

LAST REVISION 11-25-14 | DATE PLOTTED => 15-JAN-2015 | TIME PLOTTED => 16:09

BORDER LAST REVISED 7/2/2010 | USERNAME => s123119 | DGN FILE => 23e770nb006.dgn | RELATIVE BORDER SCALE IS IN INCHES 0 1 2 3 | UNIT 0318 | PROJECT NUMBER & PHASE: 02-1500-0046-1 EA: 3E7711

Dist	COUNTY	ROUTE	POST MILES TOTAL PROJECT	SHEET No.	TOTAL SHEETS
02	Tri	299	36.9/53.5	92	165

Heidi Borders 11-25-14
REGISTERED CIVIL ENGINEER DATE

11-26-14
PLANS APPROVAL DATE

REGISTERED PROFESSIONAL ENGINEER HEIDI E. BORDERS No. C64194 Exp. 6-30-15 CIVIL STATE OF CALIFORNIA

THE STATE OF CALIFORNIA OR ITS OFFICERS OR AGENTS SHALL NOT BE RESPONSIBLE FOR THE ACCURACY OR COMPLETENESS OF SCANNED COPIES OF THIS PLAN SHEET.

THERMOPLASTIC PAVEMENT MARKING

LOCATION		DESCRIPTION / MESSAGE	SQFT
POST MILE	DESCRIPTION		
53.50	INDUSTRIAL PARKWAY	(2) TYPE IV (L) ARROWS	30
		(4) TYPE III (R) ARROWS	168
		LIMIT LINE	43
		(2) STOP	44
53.30		(2) TYPE IV (L) ARROWS	30
53.21	PONDEROSA LANE	(4) TYPE IV (L) ARROWS	60
		STOP	22
		LIMIT LINE	25
53.15	DRURY LANE	(4) TYPE IV (L) ARROWS	60
		STOP	22
		LIMIT LINE	23
53.04	COX ROAD	(4) TYPE IV (L) ARROWS	60
		STOP	22
		LIMIT LINE	24
52.99		(2) TYPE IV (L) ARROWS	30
		(1) BIKE LANE SYMBOL W/ PERSON	7
		(1) BIKE LANE ARROW	7
52.92	RANSOM ROAD	(4) TYPE IV (L) ARROWS	60
		(2) BIKE LANE SYMBOL W/ PERSON	14
		(2) BIKE LANE ARROW	14
		STOP	22
		LIMIT LINE	21
	DAVIS ROAD	LIMIT LINE	21
		STOP	22
52.82		(2) TYPE IV (L) ARROWS	30
52.72	MARTIN ROAD	(1) TYPE III (R) ARROWS	42
		(4) TYPE IV (L) ARROWS	60
		LIMIT LINE	33
		(2) STOP	44
52.72	NUGGET LANE	LIMIT LINE	33
		(1) STOP	22
		(2) TYPE III (R) ARROWS	84
		(1) BIKE LANE SYMBOL W/ PERSON	7
		(1) BIKE LANE ARROW	7
52.63	TRINITY PLAZA	(2) TYPE IV (L) ARROWS	30
		(2) STOP	44
		(2) LIMIT LINE	41
52.58		(2) TYPE IV (L) ARROWS	30
		(3) TYPE VI (R) ARROWS	126
52.53	GLEN ROAD	(4) TYPE IV (L) ARROWS	60
		(1) BIKE LANE SYMBOL W/ PERSON	7
		(1) BIKE LANE ARROW	7
		LIMIT LINE	30
		STOP	22
	BETWEEN PM 52.45-52.30	(8) TYPE IV (L) ARROWS	120
		(3) STOP	22
		LIMIT LINE	23
		LIMIT LINE	32
		LIMIT LINE	36
52.26	MOUNTAIN VIEW STREET	(5) TYPE IV (L) ARROWS	75
		LIMIT LINE	31
		STOP	22
		(2) BIKE LANE SYMBOL W/ PERSON	14
		(2) BIKE LANE ARROW	14
		SUBTOTAL	1999

THERMOPLASTIC PAVEMENT MARKING

LOCATION		DESCRIPTION / MESSAGE	SQFT
POST MILE	DESCRIPTION		
52.18	MASONIC LANE	(3) TYPE IV (L) ARROWS	45
		(2) BIKE LANE SYMBOL W/ PERSON	14
		(2) BIKE LANE ARROWS	
		STOP	22
		LIMIT LINE	30
52.12	WEAVER STREET	(4) TYPE IV (L) ARROWS	60
		(1) BIKE LANE SYMBOL W/ PERSON	7
		(1) BIKE LANE ARROW	7
		CROSSWALK	73
		STOP	22
52.10		(2) TYPE IV (L) ARROWS	30
52.07	WASHINGTON STREET	(2) TYPE IV (L) ARROWS	30
		(2) TYPE IV (R) ARROWS	30
		(3) BIKE LANE SYMBOL W/ PERSON	21
		(3) BIKE LANE ARROWS	21
		CROSSWALK	268
		(2) STOP	44
52.00		(2) TYPE IV (L) ARROWS	30
51.96		(2) TYPE IV (L) ARROWS	30
51.89	MILL STREET	(4) TYPE IV (L) ARROWS	60
		(2) BIKE LANE SYMBOL W/ PERSON	14
		(2) BIKE LANE ARROWS	14
		STOP	22
		CROSSWALK	131
51.83	BREMER STREET	(2) TYPE IV (L) ARROWS	30
		CROSS WALK	202
		(1) BIKE LANE SYMBOL W/ PERSON	7
		(1) BIKE LANE ARROW	7
		STOP	22
51.80	CENTER STREET	(5) TYPE IV (L) ARROWS	75
		(1) BIKE LANE SYMBOL W/ PERSON	7
		(1) BIKE LANE ARROW	7
		LIMIT LINE	17
		STOP	22
51.69	LORENZ ROAD	(4) TYPE IV (L) ARROWS	60
		(1) BIKE LANE SYMBOL W/ PERSON	7
		(1) BIKE LANE ARROW	7
		CROSSWALK	120
		LIMIT LINE	16
		STOP	22
		SUBTOTAL	1667
		SHEET TOTAL (QUANTITIES CONTINUE ON NEXT SHEET)	3666

PAVEMENT DELINEATION QUANTITIES

PDQ-1

REVISED BY | DATE REVISED
JEANNIE STEFFAN | HEIDI BORDERS
CALCULATED-DESIGNED BY | CHECKED BY
FUNCTIONAL SUPERVISOR | JULIE CASEY

STATE OF CALIFORNIA - DEPARTMENT OF TRANSPORTATION
Caltrans® DESIGN

P:\proj1\02\3E770_plans\pse\23e770nc001.dgn

LAST REVISION 11-25-14 | DATE PLOTTED => 15-JAN-2015 | TIME PLOTTED => 16:09

Dist	COUNTY	ROUTE	POST MILES TOTAL PROJECT	SHEET No.	TOTAL SHEETS
02	Tri	299	36.9/53.5	93	165

Heidi Borders 11-25-14
REGISTERED CIVIL ENGINEER DATE

11-26-14
PLANS APPROVAL DATE

REGISTERED PROFESSIONAL ENGINEER HEIDI E. BORDERS No. C64194 Exp. 6-30-15 CIVIL STATE OF CALIFORNIA

THE STATE OF CALIFORNIA OR ITS OFFICERS OR AGENTS SHALL NOT BE RESPONSIBLE FOR THE ACCURACY OR COMPLETENESS OF SCANNED COPIES OF THIS PLAN SHEET.

THERMOPLASTIC PAVEMENT MARKING

LOCATION		DESCRIPTION / MESSAGE	SQFT
POST MILE	DESCRIPTION		
51.63	OREGON STREET	(2) TYPE IV (L) ARROWS	30
		LIMIT LINE	120
		(2) STOP	44
		CROSSWALK	70
		CROSSWALK	112
51.58	Hwy 3	(3) TYPE IV (L) ARROWS	45
		(1) BIKE LANE SYMBOL W/ PERSON	7
		(1) BIKE LANE ARROW	7
		YELLOW CROSSWALK	118
		(2) SLOW	46
		(2) SCHOOL	70
		(2) XING	42
		(1) TYPE I 10'-0" ARROW	14
		(1) TYPE VI (L) ARROWS	42
		YELLOW CROSSWALK	112
		(2) STOP	44
51.50		CROSSWALK	103
51.47	COURT STREET	CROSSWALK	118
		(2) BIKE LANE SYMBOL W/ PERSON	14
		STOP	22
		(1) BIKE LANE ARROW	7
51.42	GARDEN GULCH/FOREST AVENUE	(3) TYPE IV (L) ARROWS	45
		(4) BIKE LANE SYMBOL W/ PERSON	28
		(2) BIKE LANE ARROWS	14
		CROSSWALK	79
		CROSSWALK	158
		(2) STOP	44
51.37		(2) TYPE IV (L) ARROWS	30
		(2) BIKE LANE SYMBOL W/ PERSON	14
		CROSSWALK	78
		LIMIT LINE	27
		STOP	22
51.34	RED HILL ROAD	(2) TYPE IV (L) ARROWS	30
		LIMIT LINE	31
		STOP	22
51.26		(2) BIKE LANE SYMBOL W/ PERSON	14
51.2	S MINER STREET	LIMIT LINE	26
		STOP	22
51.14	SIDNEY GULCH ROAD	(4) TYPE IV (L) ARROWS	60
		(2) TYPE IV (R) ARROWS	30
		(6) BIKE LANE SYMBOL W/ PERSON	42
		(2) BIKE LANE ARROW	14
		LIMIT LINE	36
		LIMIT LINE	35
		(2) STOP	44
50.98		(1) TYPE IV (L) ARROWS	15
		SUBTOTAL	2147

THERMOPLASTIC PAVEMENT MARKING

LOCATION		DESCRIPTION / MESSAGE	SQFT
POST MILE	DESCRIPTION		
51.03 TO 50.03		(8) BIKE LANE SYMBOL W/ PERSON	56
		(1) BIKE LANE ARROW	7
		(2) BIKE	10
		(2) LANE	12
48.1		(3) TYPE VI (R) ARROWS	126
48.00		(3) TYPE VI (R) ARROWS	126
47.49	CASTLE ROAD	LIMIT LINE	29
		STOP	22
44.52	RIFLE RANGE ROAD	LIMIT LINE	24
		STOP	22
44.35	DUMP ROAD	LIMIT LINE	20
		STOP	22
44.1	SKY RANCH ROAD	LIMIT LINE	23
		STOP	22
44.0	SKY RANCH ROAD	LIMIT LINE	41
		STOP	22
43.66	DUTCH CREEK ROAD	LIMIT LINE	40
		STOP	22
		(1) TYPE III (L) ARROW	42
43.61		LIMIT LINE	23
		STOP	22
43.52	CANYON CREEK ROAD	LIMIT LINE	40
		STOP	22
43.36	GILZEAN ROAD	LIMIT LINE	20
		STOP	22
42.15	JUNCTION CITY CAMPGROUND	LIMIT LINE	40
		STOP	22
41.39	POWERHOUSE ROAD	LIMIT LINE	41
		STOP	22
40.15	VALDOR DRIVE	LIMIT LINE	27
		STOP	22
39.87	BIG FOOT ROAD	LIMIT LINE	59
		STOP	22
37.11		LIMIT LINE	24
		STOP	22
37.05	TRINITY RIVER ACCESS	LIMIT LINE	41
		STOP	22
51.42 TO 51.89	FOREST Ave TO MILL St	PARKING SPACE "T" MARKINGS	50
		SUBTOTAL	1251
		SHEET PD-1 TOTAL	3666
		SHEET PD-2 TOTAL	3398
		TOTAL	7064

REMOVE THERMOPLASTIC PAVEMENT MARKING

LOCATION		DESCRIPTION / MESSAGE	SQFT
POST MILE	DESCRIPTION		
43.66	DUTCH CREEK Rd	(1) TYPE III (L) ARROW	42
48.10		(3) TYPE VI (R) ARROWS	126
48.05		(3) TYPE VI (R) ARROWS	126
		TOTAL	294

PAVEMENT DELINEATION QUANTITIES

PDQ-2

STATE OF CALIFORNIA - DEPARTMENT OF TRANSPORTATION
Caltrans DESIGN

FUNCTIONAL SUPERVISOR: JULIE CASEY
CALCULATED-DESIGNED BY: JEANNIE STEFFAN
CHECKED BY: HEIDI BORDERS
REVISED BY
DATE REVISED

P:\proj1\02\3E770_plans\pse\23e770nc002.dgn

LAST REVISION 11-25-14
DATE PLOTTED => 15-JAN-2015
TIME PLOTTED => 16:09

Dist	COUNTY	ROUTE	POST MILES TOTAL PROJECT	SHEET No.	TOTAL SHEETS
02	Tri	299	36.9/53.5	94	165

Heidi Borders 11-25-14
REGISTERED CIVIL ENGINEER DATE

11-26-14
PLANS APPROVAL DATE

REGISTERED PROFESSIONAL ENGINEER
HEIDI E. BORDERS
No. C64194
Exp. 6-30-15
CIVIL
STATE OF CALIFORNIA

THE STATE OF CALIFORNIA OR ITS OFFICERS OR AGENTS SHALL NOT BE RESPONSIBLE FOR THE ACCURACY OR COMPLETENESS OF SCANNED COPIES OF THIS PLAN SHEET.

PAVEMENT DELINEATION QUANTITIES

THERMOPLASTIC TRAFFIC STRIPE (SPRAYABLE)																		PAVEMENT MARKERS (RETROREFLECTIVE-RECESSED)							
LOCATION DESCRIPTION / POST MILE				DETAIL 6	DETAIL 12	DETAIL 11	DETAIL 19	DETAIL 22	DETAIL 27B	DETAIL 27C	DETAIL 29	DETAIL 32	DETAIL 38	DETAIL 38A	DETAIL 39	DETAIL 39A	TYPE D				TYPE G			TYPE H
																	DETAIL 6	DETAIL 19	DETAIL 22	DETAIL 29	DETAIL 32	DETAIL 12	DETAIL 38	DETAIL 19
BEGIN		END		LF	LF	LF	LF	LF	LF	LF	LF	LF	LF	LF	LF	LF	EA	EA	EA	EA	EA	EA	EA	EA
BEGIN BRIDGE	36.90	ACORN LN	40.01					16,035	32,070										1338					
ACORN LANE	40.01	HIGHLAND RD	43.75	550			1627	16,788	39,272		1294		204				12	36	1405	58				70
HIGHLAND Rd	43.75	BEGIN PASSING LANE	46.81	3030			949	12,417	32,554					238			64	21	1039					42
BEGIN PASSING LANE	46.81	END PASSING LANE	49.70			16,303		13,807	30,154		2540								1155	108				
END PASSING LANE	49.70	WENDY LN	50.03					5110	10,220	115									428					
WENDY LANE	50.03	S. MINER ST	51.20					670	1202	1219	1472		570	150	4234				60	65			25	
S MINER St	51.20	WEAVER ST	52.12					929	337	1048	750	6116	374		8333	99			83	37	322		17	
WEAVER ST	52.12	RANSOM RD	52.92		297			333	4375	1071		7218	157	633	4942				30		379	7	9	
RANSOM Rd	52.92	END INDUSTRIAL PKWY	53.50						5162	416		5618		325							296			
SUBTOTAL				3580	297	16,303	2576	66,089	155,346	3869	6056	18,952	1305	1346	17,509	99	76	57	5538	268	997	7	51	112
TOTAL				293,327													7106							

PAVEMENT DELINEATION QUANTITIES

PDQ-3

REVISED BY | DATE REVISED
JEANNIE STEFFAN | HEIDI BORDERS
CALCULATED-DESIGNED BY | CHECKED BY
FUNCTIONAL SUPERVISOR: JULIE CASEY
STATE OF CALIFORNIA - DEPARTMENT OF TRANSPORTATION
Caltrans DESIGN
P:\proj\02\3E770_plans\pse\23e770nc003.dgn

LAST REVISION 11-25-14 | DATE PLOTTED => 15-JAN-2015 | TIME PLOTTED => 16:09

Dist	COUNTY	ROUTE	POST MILES TOTAL PROJECT	SHEET No.	TOTAL SHEETS
02	Tri	299	36.9/53.5	95	165

Heidi Borders 11-25-14
REGISTERED CIVIL ENGINEER DATE

11-26-14
PLANS APPROVAL DATE

REGISTERED PROFESSIONAL ENGINEER
HEIDI E. BORDERS
No. C64194
Exp. 6-30-15
CIVIL
STATE OF CALIFORNIA

THE STATE OF CALIFORNIA OR ITS OFFICERS OR AGENTS SHALL NOT BE RESPONSIBLE FOR THE ACCURACY OR COMPLETENESS OF SCANNED COPIES OF THIS PLAN SHEET.

PAINT CURB (2-COAT)

CURB RAMP #	LOCATION	LF
1	FOREST Ave	20
2	OREGON St	27
3	PM 51.50, WB	34
4	PM 51.50, EB	10
5	TRINITY LAKE Blvd	18
7	TRINITY LAKE Blvd	35
8	COURT St	15
10	OREGON St	18
14	LORENZ Rd	16
15	LORENZ Rd	8
16	LORENZ Rd	5
18	TRINITY LAKE Blvd	20
19	COURT St	24
21	OREGON St	29
22	BRANNAN St	6
27	BREMER St	20
30	BREMER St	17
31	WASHINGTON St	35
38	MARTIN Rd	35
	TOTAL	392

NOTE: RED CURB PAINT

PREFORMED THERMOPLASTIC PAVEMENT MARKING MATERIAL (TRAFFIC CALMING)

LOCATION		DESCRIPTION	SQFT	NOTES
PM				
PM 51.00			3558	HERRING BONE (SAND AND WHITE)
PM 51.20			1264	HERRING BONE (SAND AND WHITE)
PM 51.47	COURT St	CROSSWALK - BRICK PATTERN	774	RUNNING BOND (BRICK RED AND WHITE)
PM 51.50		CROSSWALK - BRICK PATTERN	470	RUNNING BOND (BRICK RED AND WHITE)
PM 51.58	Hwy 3	CROSSWALK - BRICK PATTERN	508	RUNNING BOND (BRICK RED AND WHITE)
PM 51.63	OREGON St	CROSSWALK - BRICK PATTERN	515	RUNNING BOND (BRICK RED AND WHITE)
PM 51.69	LORENZ Rd	CROSSWALK - BRICK PATTERN	515	RUNNING BOND (BRICK RED AND WHITE)
		TOTAL	7604	

NOTE: ALL ITEMS LISTED ABOVE ARE TO BE REPLACED IN KIND

PAVEMENT DELINEATION QUANTITIES

PDQ-4

REVISED BY | DATE REVISED
JEANNIE STEFFAN | HEIDI BORDERS
CALCULATED-DESIGNED BY | CHECKED BY
FUNCTIONAL SUPERVISOR: JULIE CASEY

STATE OF CALIFORNIA - DEPARTMENT OF TRANSPORTATION
Caltrans
DESIGN

P:\proj1\02\3E770_plans\pse\23e770nc004.dgn

LAST REVISION 11-25-14 | DATE PLOTTED => 15-JAN-2015 | TIME PLOTTED => 16:09

Dist	COUNTY	ROUTE	POST MILES TOTAL PROJECT	SHEET No.	TOTAL SHEETS
02	Tri	299	36.9/53.5	96	165

Frank J. Rivas 11-25-14
REGISTERED CIVIL ENGINEER DATE

11-26-14
PLANS APPROVAL DATE

REGISTERED PROFESSIONAL ENGINEER
FRANK RIVAS
No. C53592
Exp. 6/30/15
CIVIL
STATE OF CALIFORNIA

THE STATE OF CALIFORNIA OR ITS OFFICERS OR AGENTS SHALL NOT BE RESPONSIBLE FOR THE ACCURACY OR COMPLETENESS OF SCANNED COPIES OF THIS PLAN SHEET.

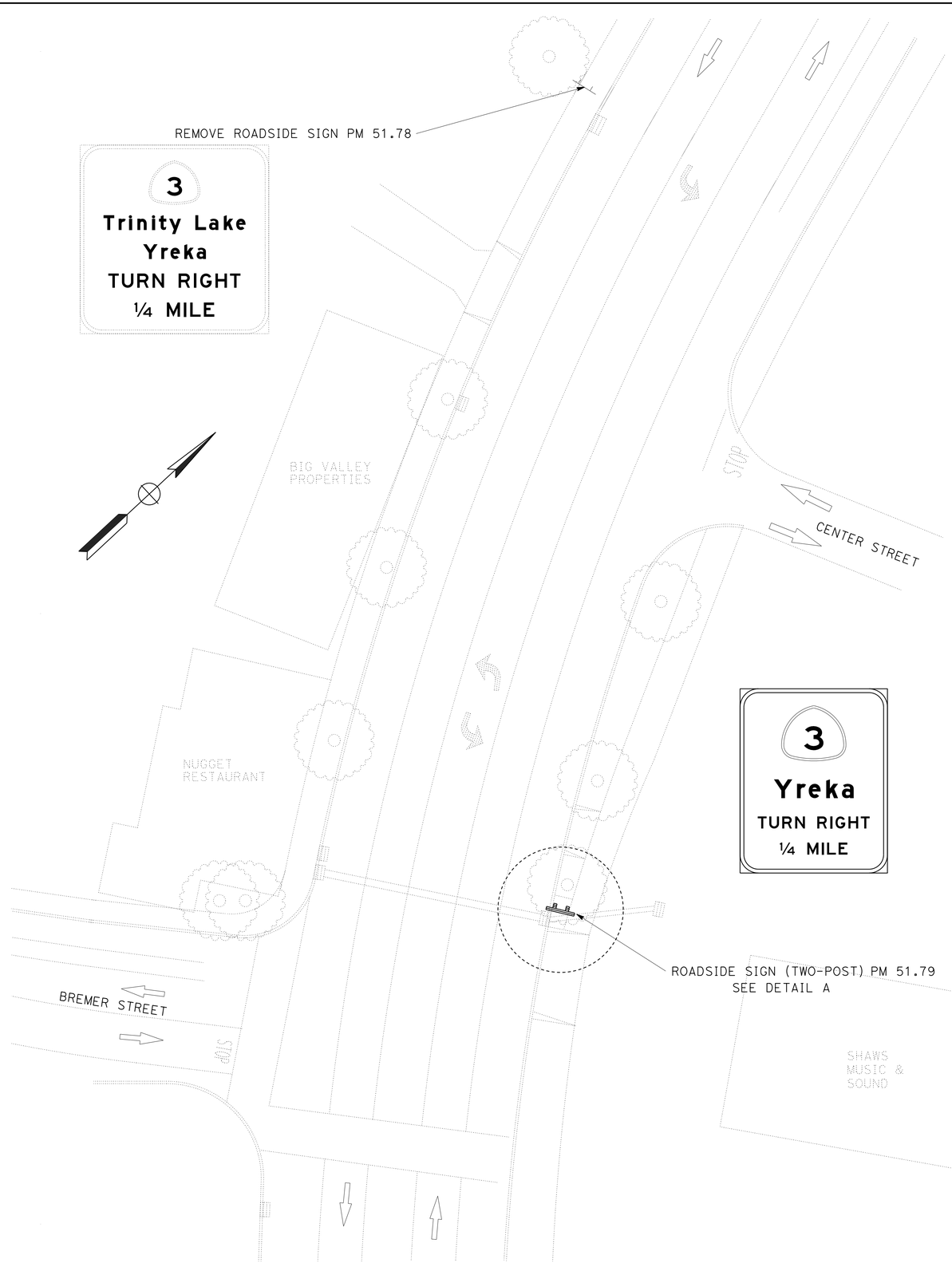

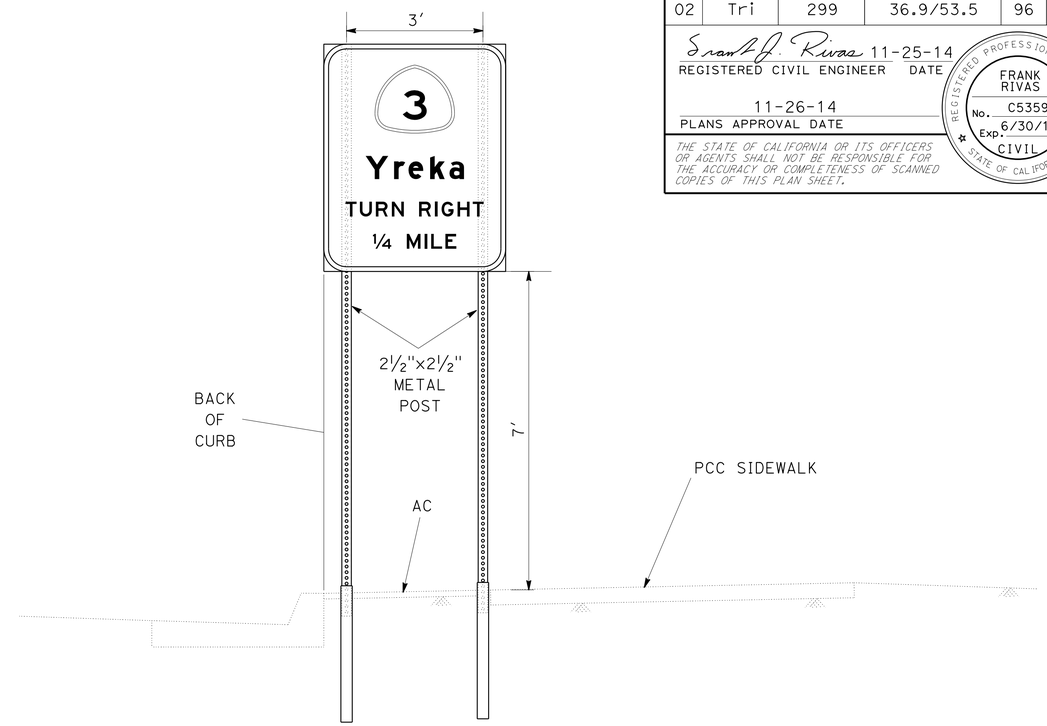

SECTION A-A

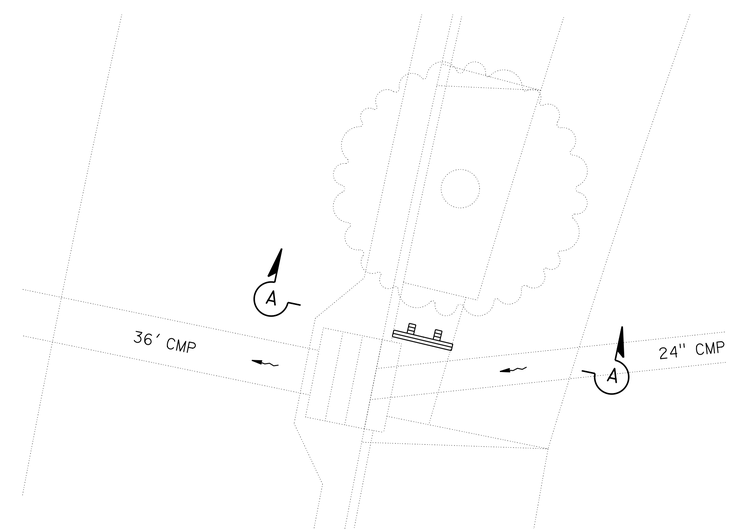

DETAIL A

SIGN DETAILS

NO SCALE

SD-1

REVISED BY	DATE REVISED

CALCULATED-DESIGNED BY	CHECKED BY
FRANK RIVAS	ROB STINGER

FUNCTIONAL SUPERVISOR: ROB STINGER

STATE OF CALIFORNIA - DEPARTMENT OF TRANSPORTATION
Caltrans® TRAFFIC OPS.

P:\proj1\02\3E770_plans\pse\23e770ob001.dgn

LAST REVISION 11-25-14 | DATE PLOTTED => 15-JAN-2015 | TIME PLOTTED => 16:09

Dist	COUNTY	ROUTE	POST MILES TOTAL PROJECT	SHEET No.	TOTAL SHEETS
02	Tri	299	36.9/53.5	97	165

Frank J. Rivas 11-25-14
REGISTERED CIVIL ENGINEER DATE

11-26-14
PLANS APPROVAL DATE

REGISTERED PROFESSIONAL ENGINEER
FRANK RIVAS
No. C53592
Exp. 6/30/15
CIVIL
STATE OF CALIFORNIA

THE STATE OF CALIFORNIA OR ITS OFFICERS OR AGENTS SHALL NOT BE RESPONSIBLE FOR THE ACCURACY OR COMPLETENESS OF SCANNED COPIES OF THIS PLAN SHEET.

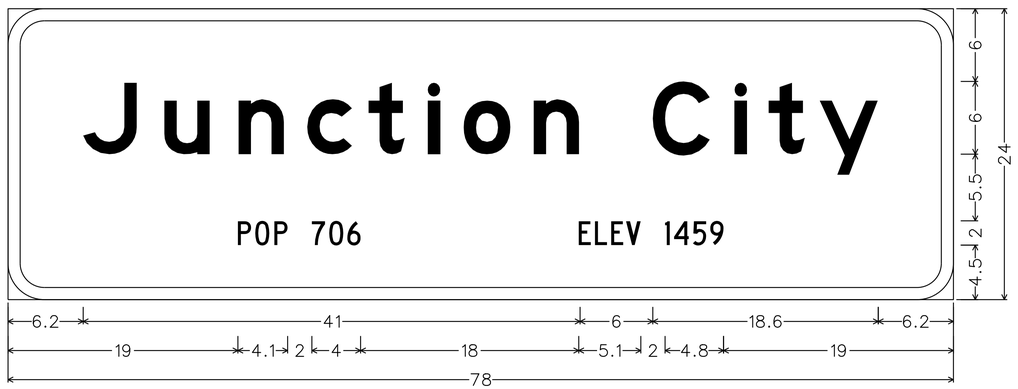

3.0" Radius, 1.0" Border, White on Green;
[Junction City] E Mod; [POP 706] C; [ELEV 1459] C;

G9(Ca)
PM 43.35 & PM 43.95

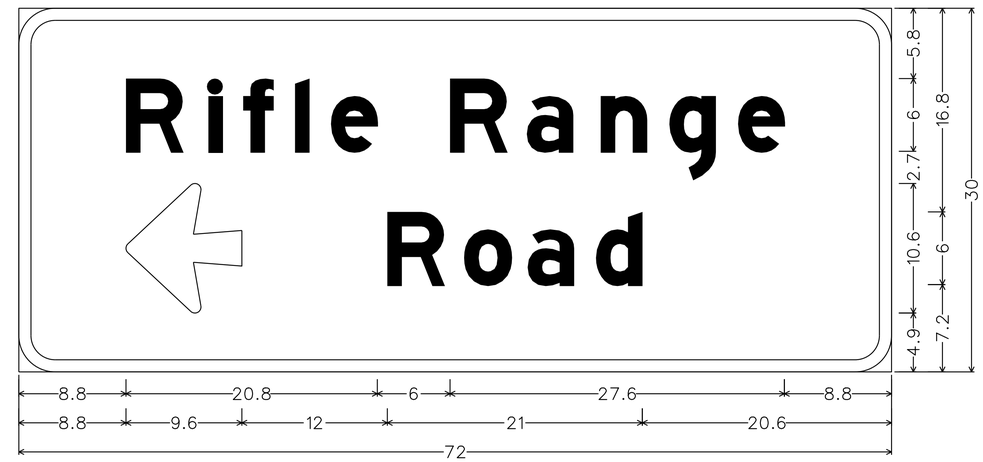

3.0" Radius, 1.0" Border, White on Green;
[Rifle Range] E Mod; Arrow 6UC-2LH - 9.6" 180¦; [Road] E Mod;

G8(Ca)
PM 44.47

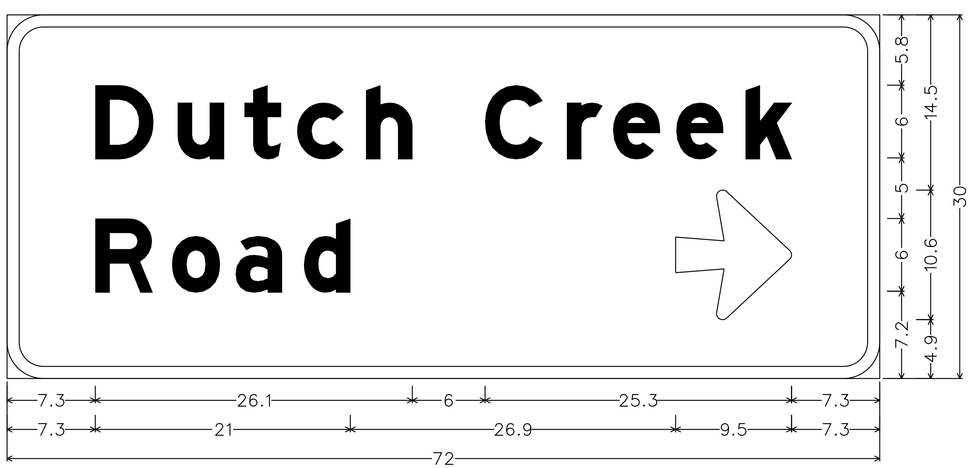

3.0" Radius, 1.0" Border, White on Green;
[Dutch Creek] E Mod; [Road] E Mod; Arrow 6UC-2LH - 9.6" 0¦;

G8(Ca)
PM 43.54

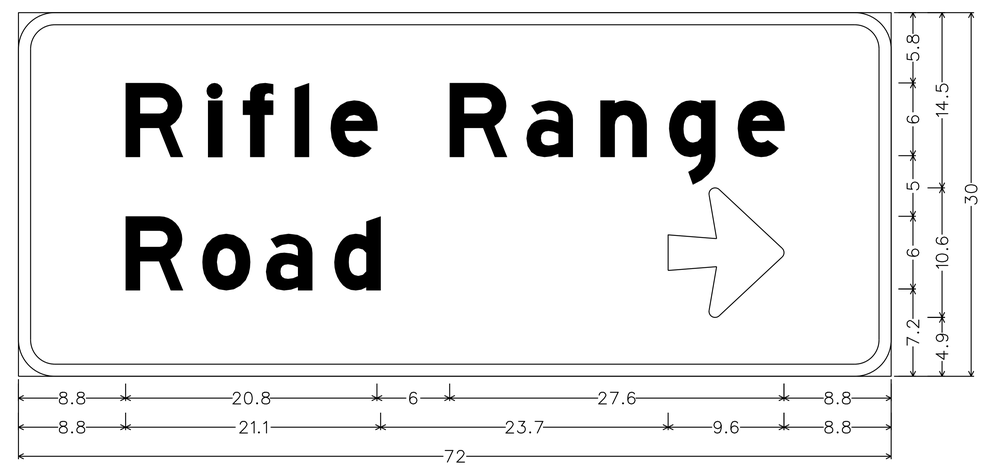

3.0" Radius, 1.0" Border, White on Green;
[Rifle Range] E Mod; [Road] E Mod; Arrow 6UC-2LH - 9.6" 0¦;

G8(Ca)
PM 44.54

SIGN DETAILS
NO SCALE

SD-2

REVISED BY | DATE REVISED
FRANK RIVAS | ROB STINGER
CALCULATED-DESIGNED BY | CHECKED BY
FUNCTIONAL SUPERVISOR
ROB STINGER

STATE OF CALIFORNIA - DEPARTMENT OF TRANSPORTATION
Caltrans® TRAFFIC OPS.

P:\proj1\02\3E770_plans\pse\23e770ob002.dgn

LAST REVISION 11-25-14 | DATE PLOTTED => 15-JAN-2015 | TIME PLOTTED => 16:09

Dist	COUNTY	ROUTE	POST MILES TOTAL PROJECT	SHEET No.	TOTAL SHEETS
02	Tri	299	36.9/53.5	98	165

REGISTERED CIVIL ENGINEER 11-25-14 DATE

PLANS APPROVAL DATE 11-26-14

REGISTERED PROFESSIONAL ENGINEER FRANK RIVAS No. C53592 Exp. 6/30/15 CIVIL STATE OF CALIFORNIA

THE STATE OF CALIFORNIA OR ITS OFFICERS OR AGENTS SHALL NOT BE RESPONSIBLE FOR THE ACCURACY OR COMPLETENESS OF SCANNED COPIES OF THIS PLAN SHEET.

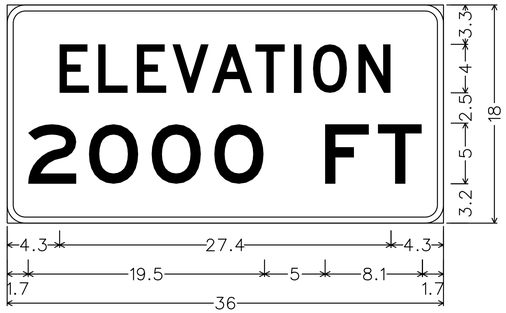

1.5" Radius, 0.5" Border, White on Green;
[ELEVATION] D; [2000 FT] E;

G17(2000)(Ca)
PM 46.18
PM 52.63
PM 52.65

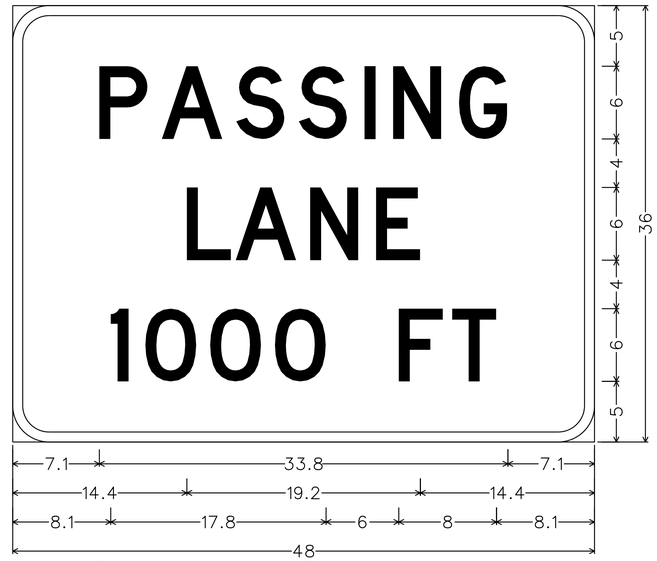

3.0" Radius, 0.8" Border, White on Green;
[PASSING] D; [LANE] D; [1000 FT] D;

G69(Ca)
PM 46.67

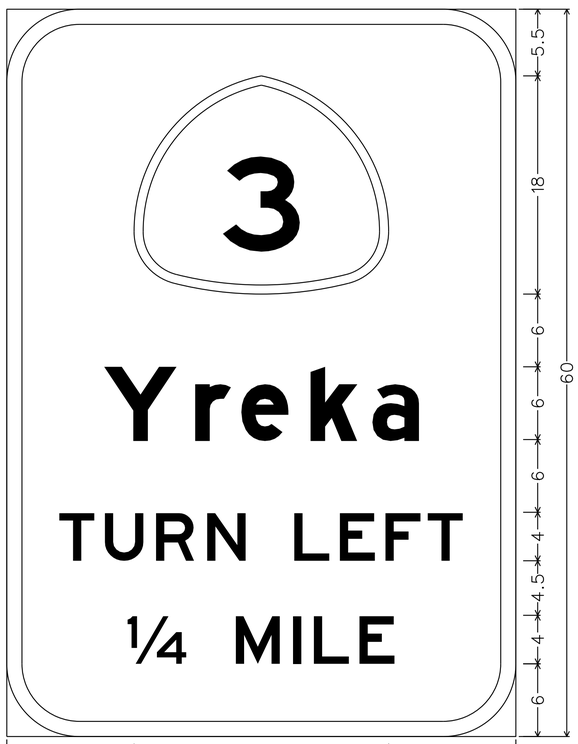

6.0" Radius, 1.3" Border, White on Green;
[Yreka] E Mod; [TURN LEFT] E; [¼ MILE] E;

G22(Ca)
PM 51.42

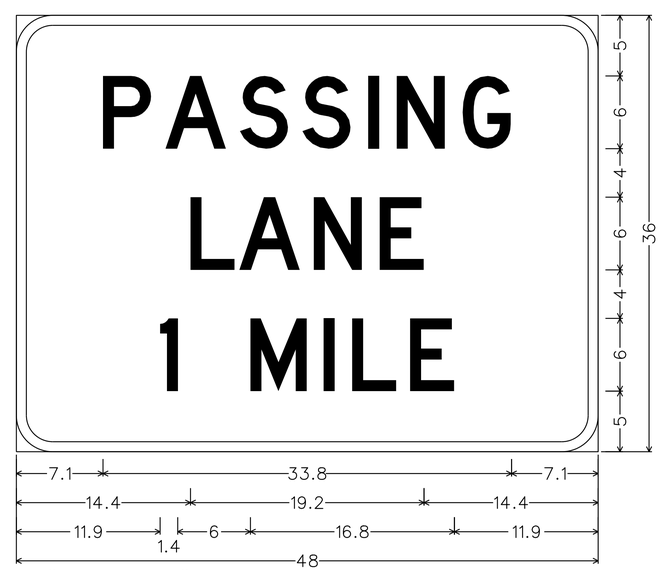

3.0" Radius, 0.8" Border, White on Green;
[PASSING] D; [LANE] D; [1 MILE] D;

G69(Ca)
PM 50.76

SIGN DETAILS
NO SCALE
SD-3

REVISED BY | DATE REVISED
FRANK RIVAS | ROB STINGER
CALCULATED-DESIGNED BY | CHECKED BY
FUNCTIONAL SUPERVISOR: ROB STINGER
STATE OF CALIFORNIA - DEPARTMENT OF TRANSPORTATION
Caltrans® TRAFFIC OPS.
P:\proj1\02\3E770_plans\pse\23e770ob003.dgn

LAST REVISION 11-25-14 | DATE PLOTTED => 15-JAN-2015 | TIME PLOTTED => 16:09

Dist	COUNTY	ROUTE	POST MILES TOTAL PROJECT	SHEET No.	TOTAL SHEETS
02	Tri	299	36.9/53.5	99	165

REGISTERED CIVIL ENGINEER DATE 11-25-14

PLANS APPROVAL DATE 11-26-14

REGISTERED PROFESSIONAL ENGINEER FRANK RIVAS No. C53592 Exp. 6/30/15 CIVIL STATE OF CALIFORNIA

THE STATE OF CALIFORNIA OR ITS OFFICERS OR AGENTS SHALL NOT BE RESPONSIBLE FOR THE ACCURACY OR COMPLETENESS OF SCANNED COPIES OF THIS PLAN SHEET.

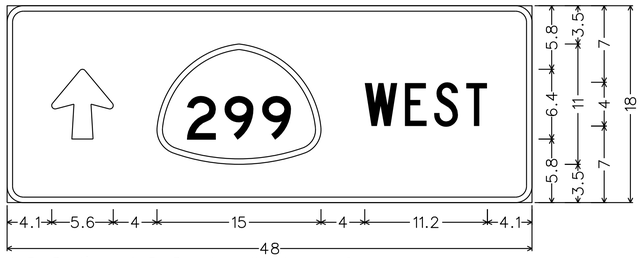

1.5" Radius, 0.5" Border, White on Green;
Arrow 4UC&CAP-1L - 6.4" 90{; [WEST] C;

G78(Ca)
PM 51.63

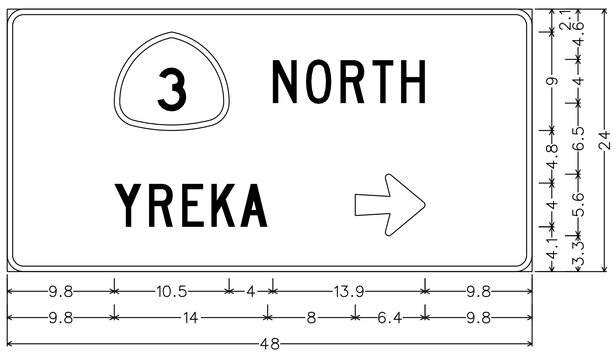

1.5" Radius, 0.5" Border, White on Green;
[NORTH] C; [YREKA] C; Arrow 4UC&CAP-1L - 6.4" 0{;

G78(Ca)
PM 51.63

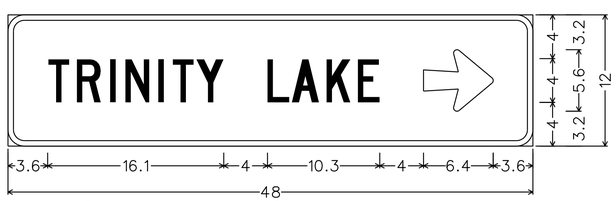

1.5" Radius, 0.5" Border, White on Brown;
[TRINITY] C; [LAKE] C; Arrow 4UC&CAP-1L - 6.4" 0{;

G8(Ca)
PM 51.63

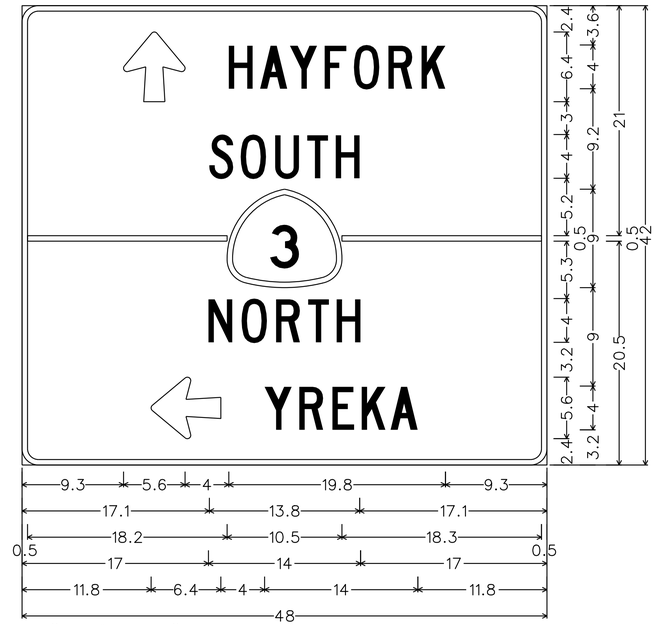

1.5" Radius, 0.5" Border, White on Green;
Arrow 4UC&CAP-1L - 6.4" 90{; [HAYFORK] C; [SOUTH] C;
[NORTH] C; Arrow 4UC&CAP-1L - 6.4" 180{; [YREKA] C;

G77A(Ca)
PM 51.55

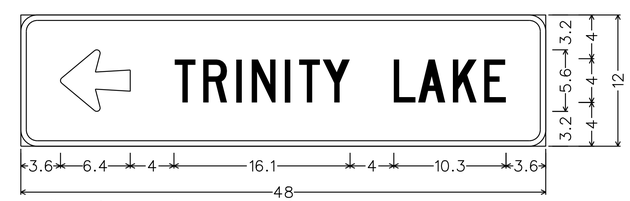

1.5" Radius, 0.5" Border, White on Brown;
Arrow 4UC&CAP-1L - 6.4" 180{; [TRINITY] C; [LAKE] C;

G8(Ca)
PM 51.55

SIGN DETAILS

NO SCALE

SD-4

REVISED BY	DATE REVISED
FRANK RIVAS	ROB STINGER
CALCULATED-DESIGNED BY	CHECKED BY
FUNCTIONAL SUPERVISOR	ROB STINGER

STATE OF CALIFORNIA - DEPARTMENT OF TRANSPORTATION
Caltrans® TRAFFIC OPS.

P:\proj\02\3E770_plans\pse\23e770ob004.dgn

LAST REVISION 11-25-14 | DATE PLOTTED => 15-JAN-2015 | TIME PLOTTED => 16:09

Dist	COUNTY	ROUTE	POST MILES TOTAL PROJECT	SHEET No.	TOTAL SHEETS
02	Tri	299	36.9/53.5	100	165

REGISTERED CIVIL ENGINEER DATE 11-25-14

PLANS APPROVAL DATE 11-26-14

REGISTERED PROFESSIONAL ENGINEER FRANK RIVAS No. C53592 Exp. 6/30/15 CIVIL STATE OF CALIFORNIA

THE STATE OF CALIFORNIA OR ITS OFFICERS OR AGENTS SHALL NOT BE RESPONSIBLE FOR THE ACCURACY OR COMPLETENESS OF SCANNED COPIES OF THIS PLAN SHEET.

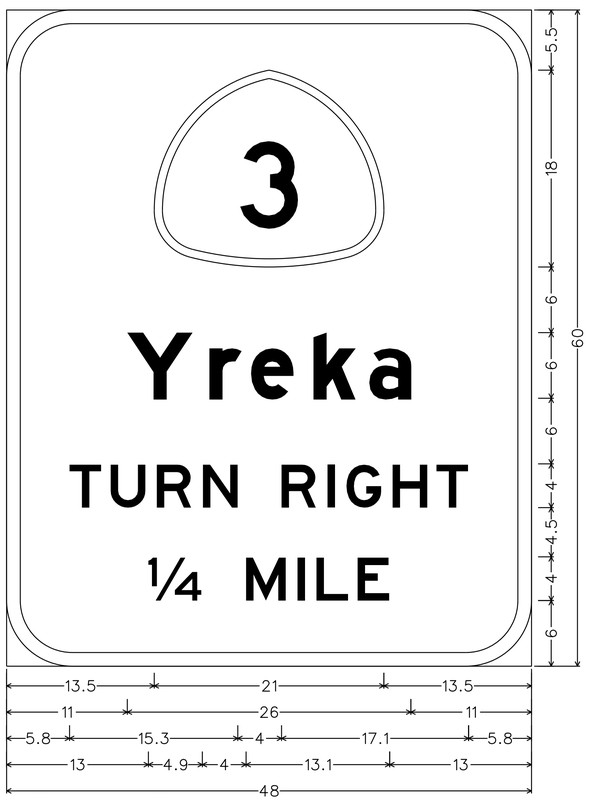

6.0" Radius, 1.3" Border, White on Green;
[Yreka] E Mod; [TURN RIGHT] E; [¼ MILE] E;

G22(Ca)
PM 51.79

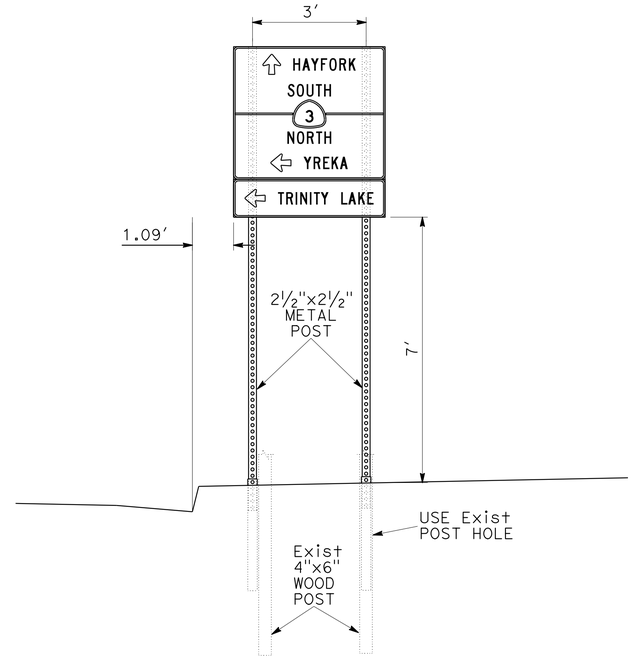

PM 51.55
FEBT

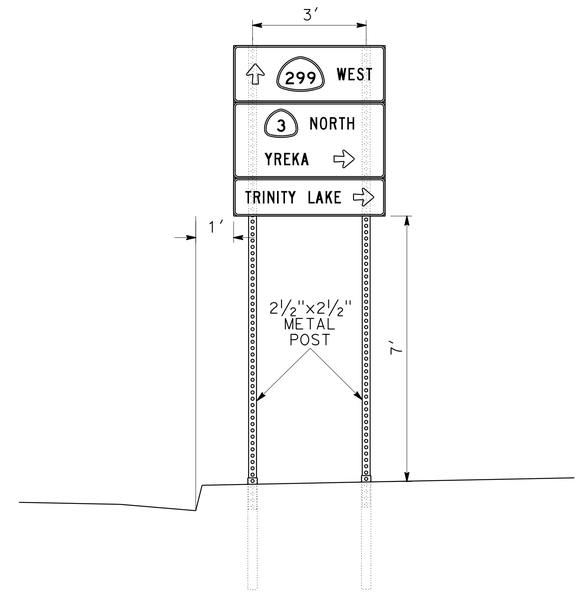

PM 51.63
FWBT

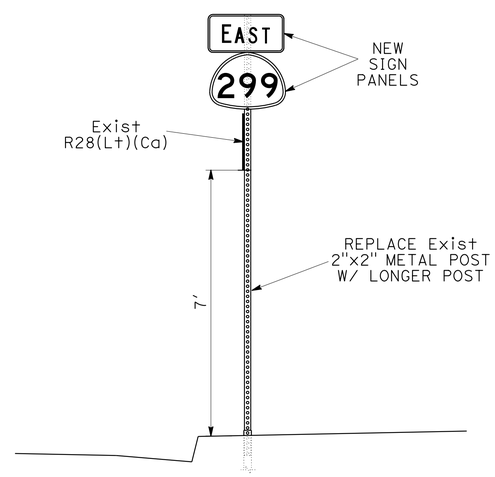

PM 51.63
FEBT

SIGN DETAILS

NO SCALE

SD-5

REVISED BY	DATE REVISED

CALCULATED-DESIGNED BY	FRANK RIVAS
CHECKED BY	ROB STINGER

FUNCTIONAL SUPERVISOR: ROB STINGER

STATE OF CALIFORNIA - DEPARTMENT OF TRANSPORTATION
Caltrans® TRAFFIC OPS.

P:\proj1\02\3E770_plans\pse\23e770ob005.dgn

LAST REVISION 11-25-14 | DATE PLOTTED => 15-JAN-2015 | TIME PLOTTED => 16:09