Dist	COUNTY	ROUTE	POST MILES TOTAL PROJECT	SHEET No.	TOTAL SHEETS
02	Sis	5	R50.9/R58.2	128	329

REGISTERED CIVIL ENGINEER 06-14-11 DATE

06-15-11
PLANS APPROVAL DATE

TOBY J. CRAWFORD No. C71138 Exp. 6-30-13 CIVIL — REGISTERED PROFESSIONAL ENGINEER — STATE OF CALIFORNIA

THE STATE OF CALIFORNIA OR ITS OFFICERS OR AGENTS SHALL NOT BE RESPONSIBLE FOR THE ACCURACY OR COMPLETENESS OF SCANNED COPIES OF THIS PLAN SHEET.

NOTE:

1. FOR DRAINAGE SYSTEMS NOT SHOWN, REFER TO DRAINAGE DETAILS AND DRAINAGE QUANTITIES.
2. SEE REVISED STANDARD PLAN P45 FOR CONCRETE PAVEMENT REINFORCEMENT AND ISOLATION JOINTS AT DRAINAGE INLETS.

LEGEND:

- (1) DRAINAGE SYSTEM No.
- (a) DRAINAGE UNIT
- FLOW DIRECTION

ABBREVIATIONS:

Dir DIRECTION

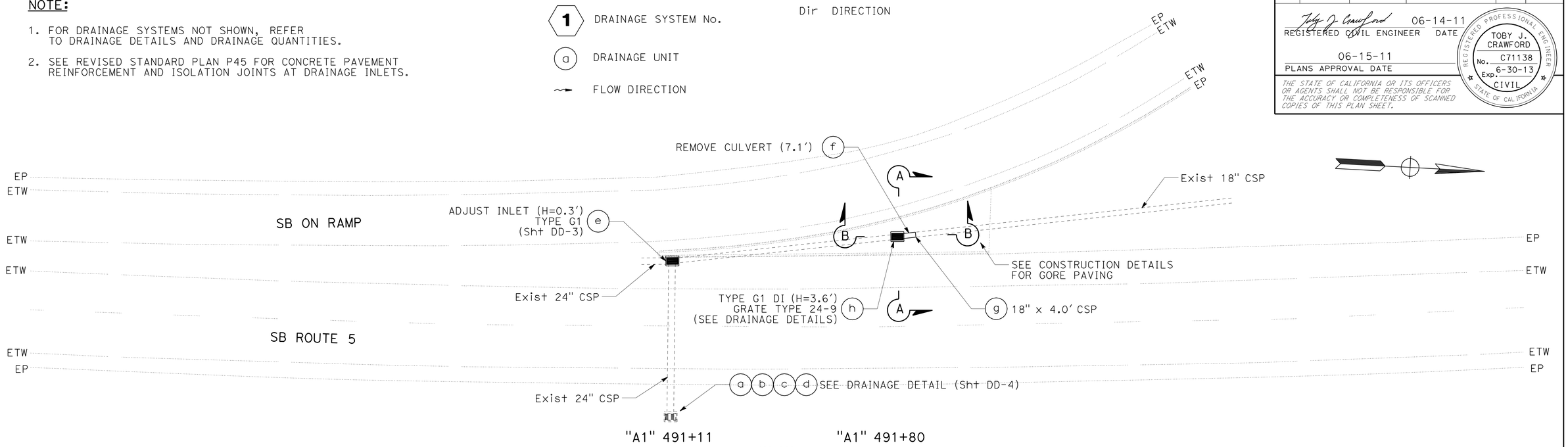

PLAN

DRAINAGE SYSTEM No. (2)

SCALE: 1" = 15′

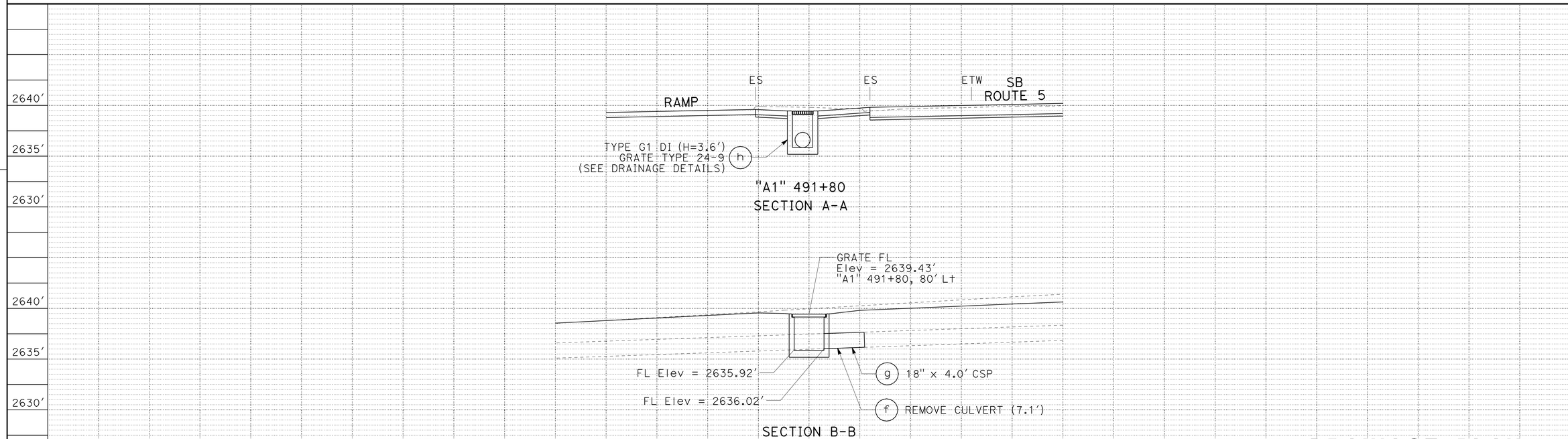

PROFILE

SCALE: 1" = 5′

DRAINAGE PLAN AND PROFILE

SCALE: AS SHOWN **D-1**

REVISED BY	DATE REVISED

TOBY CRAWFORD — GINNY SEIBERT — CALCULATED-DESIGNED BY — CHECKED BY

FUNCTIONAL SUPERVISOR: STEVE TOPAL

STATE OF CALIFORNIA - DEPARTMENT OF TRANSPORTATION — Caltrans — DESIGN

P:\proj1\02\3E760_plans\pse\23e760ia001.dgn

LAST REVISION 06-14-11 — DATE PLOTTED => 17-AUG-2011 — TIME PLOTTED => 10:51

Dist	COUNTY	ROUTE	POST MILES TOTAL PROJECT	SHEET No.	TOTAL SHEETS
02	Sis	5	R50.9/R58.2	129	329

REGISTERED CIVIL ENGINEER 06-14-11 DATE

06-15-11
PLANS APPROVAL DATE

REGISTERED PROFESSIONAL ENGINEER TOBY J. CRAWFORD No. C71138 Exp. 6-30-13 CIVIL STATE OF CALIFORNIA

THE STATE OF CALIFORNIA OR ITS OFFICERS OR AGENTS SHALL NOT BE RESPONSIBLE FOR THE ACCURACY OR COMPLETENESS OF SCANNED COPIES OF THIS PLAN SHEET.

NOTES:

1. SEE LAYOUTS AND STAGE CONSTRUCTION SHEETS FOR LOCATIONS OF CONCRETE BARRIER REMOVAL AND REPLACEMENT.
2. GRATED LINE DRAIN TO BE INSTALLED DURING STAGE 4A. SEE DRAINAGE DETAILS.

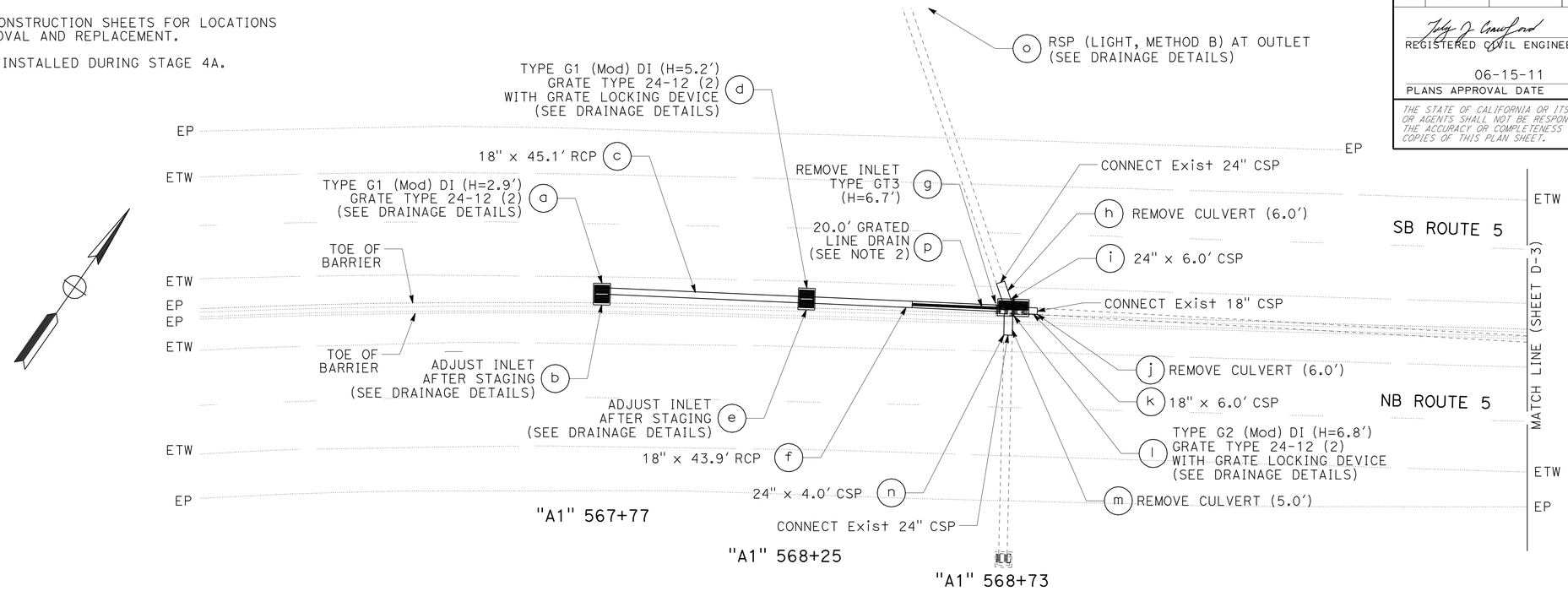

PLAN

DRAINAGE SYSTEM No. 11

SCALE: 1"=15'

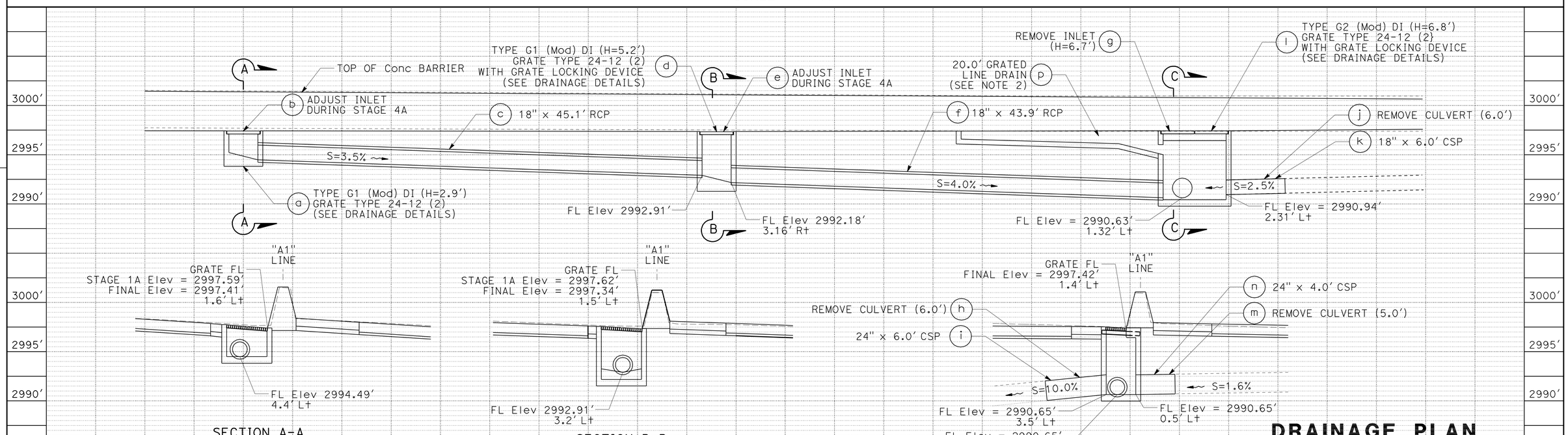

PROFILE

SCALE: 1" = 5'

DRAINAGE PLAN AND PROFILES

SCALE: AS SHOWN

D-2

REVISED BY | DATE REVISED | CALCULATED-DESIGNED BY | CHECKED BY | FUNCTIONAL SUPERVISOR: STEVE TOPAL

STATE OF CALIFORNIA - DEPARTMENT OF TRANSPORTATION
Caltrans DESIGN

P:\proj1\02\3E760_plans\pse\23e760ia002.dgn

LAST REVISION | DATE PLOTTED => 17-AUG-2011 | TIME PLOTTED => 10:52
06-14-11

Dist	COUNTY	ROUTE	POST MILES TOTAL PROJECT	SHEET No.	TOTAL SHEETS
02	Sis	5	R50.9/R58.2	130	329

REGISTERED CIVIL ENGINEER 06-14-11 DATE

06-15-11
PLANS APPROVAL DATE

REGISTERED PROFESSIONAL ENGINEER TOBY J. CRAWFORD No. C71138 Exp. 6-30-13 CIVIL STATE OF CALIFORNIA

THE STATE OF CALIFORNIA OR ITS OFFICERS OR AGENTS SHALL NOT BE RESPONSIBLE FOR THE ACCURACY OR COMPLETENESS OF SCANNED COPIES OF THIS PLAN SHEET.

NOTE:

1. SEE LAYOUTS AND STAGE CONSTRUCTION SHEETS FOR LOCATIONS OF CONCRETE BARRIER REMOVAL AND REPLACEMENT.

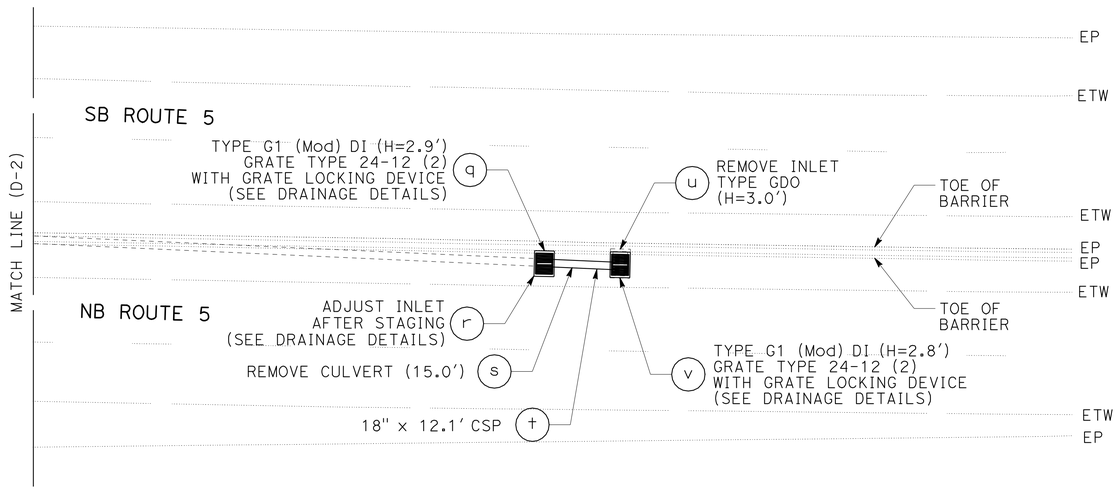

"A1" 570+65 "A1" 570+80

PLAN

DRAINAGE SYSTEM No. 11 (Continued)

SCALE: 1"=15′

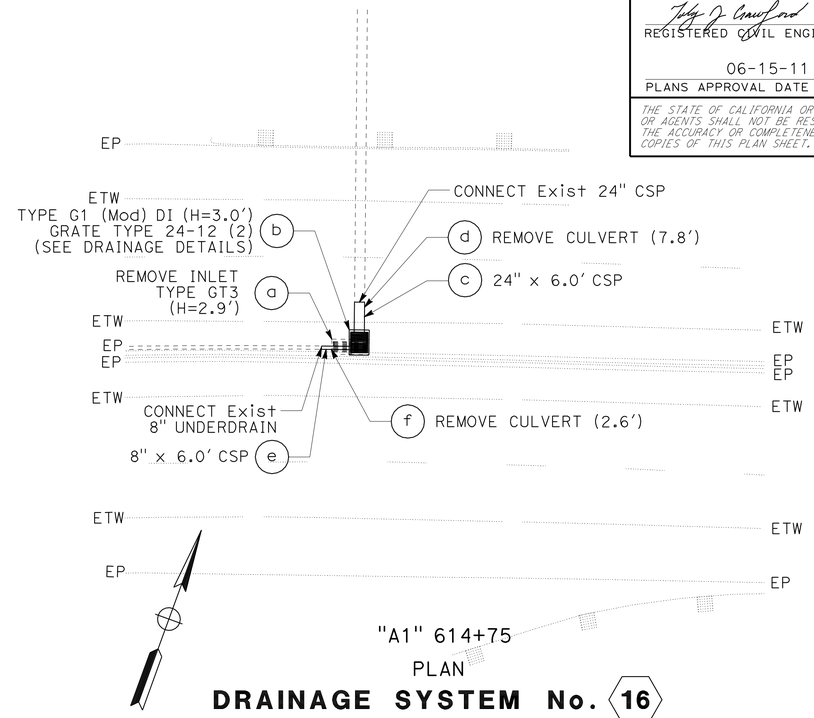

"A1" 614+75

PLAN

DRAINAGE SYSTEM No. 16

SCALE: 1"=15′

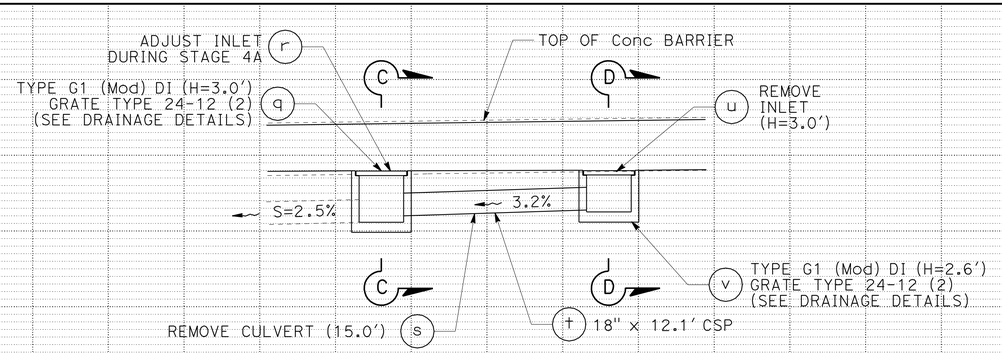

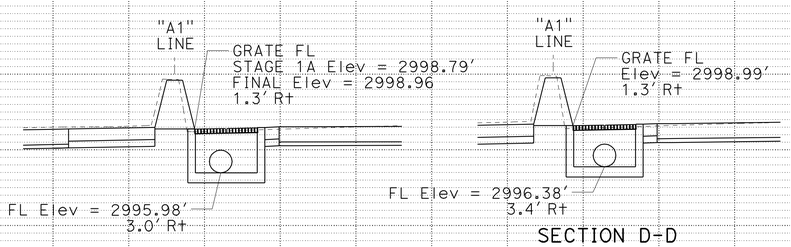

SECTION C-C
"A1" 570+65

SECTION D-D
"A1" 570+80

PROFILE

SCALE: 1" = 5′

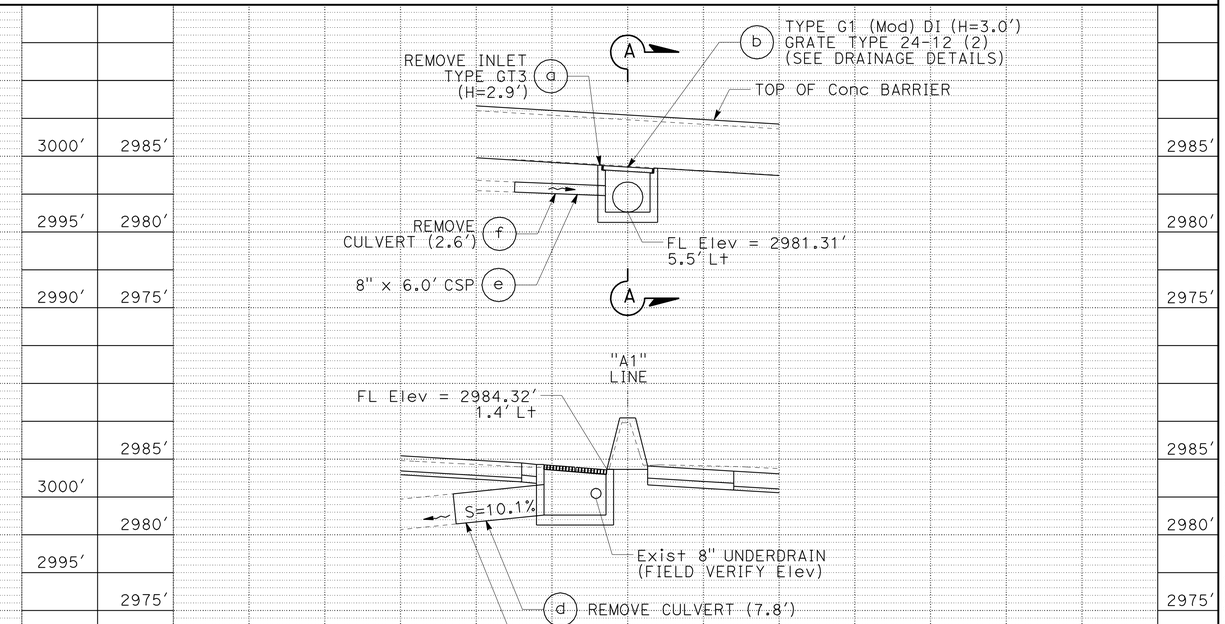

SECTION A-A
"A1" 614+75

DRAINAGE PLAN AND PROFILE

SCALE: AS SHOWN **D-3**

REVISED BY	DATE REVISED

TOBY CRAWFORD — GINNY SEIBERT — CALCULATED-DESIGNED BY — CHECKED BY

FUNCTIONAL SUPERVISOR: STEVE TOPAL

STATE OF CALIFORNIA - DEPARTMENT OF TRANSPORTATION — DESIGN — Caltrans

P:\proj1\02\3E760_plans\pse\23e760ia003.dgn

LAST REVISION 06-14-11 — DATE PLOTTED => 17-AUG-2011 — TIME PLOTTED => 10:52

Dist	COUNTY	ROUTE	POST MILES TOTAL PROJECT	SHEET No.	TOTAL SHEETS
02	Sis	5	R50.9/R58.2	131	329

REGISTERED CIVIL ENGINEER 06-14-11 DATE

06-15-11
PLANS APPROVAL DATE

REGISTERED PROFESSIONAL ENGINEER TOBY J. CRAWFORD No. C71138 Exp. 6-30-13 CIVIL STATE OF CALIFORNIA

THE STATE OF CALIFORNIA OR ITS OFFICERS OR AGENTS SHALL NOT BE RESPONSIBLE FOR THE ACCURACY OR COMPLETENESS OF SCANNED COPIES OF THIS PLAN SHEET.

NOTE:

1. SEE LAYOUTS AND STAGE CONSTRUCTION SHEETS FOR LOCATIONS OF CONCRETE BARRIER REMOVAL AND REPLACEMENT.

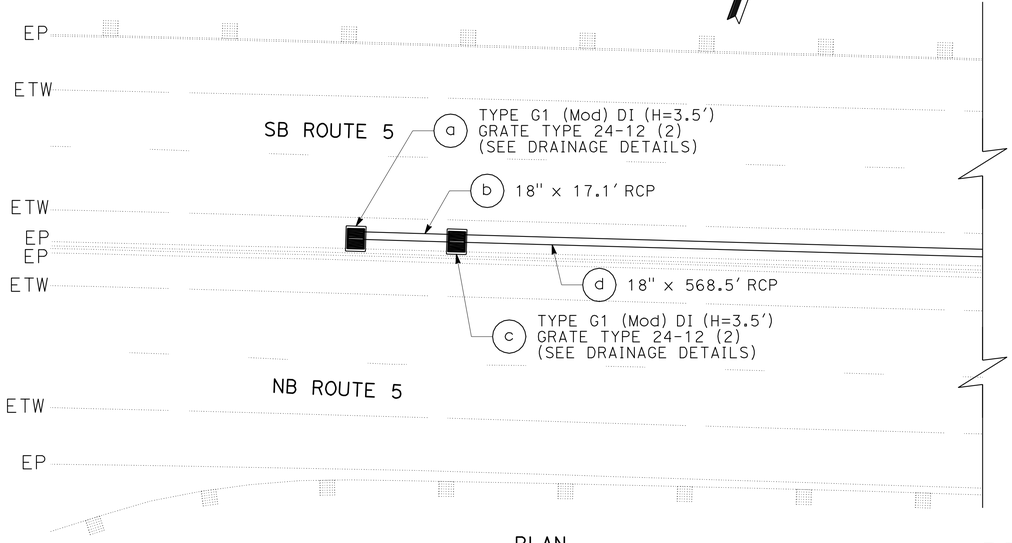

PLAN
"A1" 615+60 "A1" 615+80

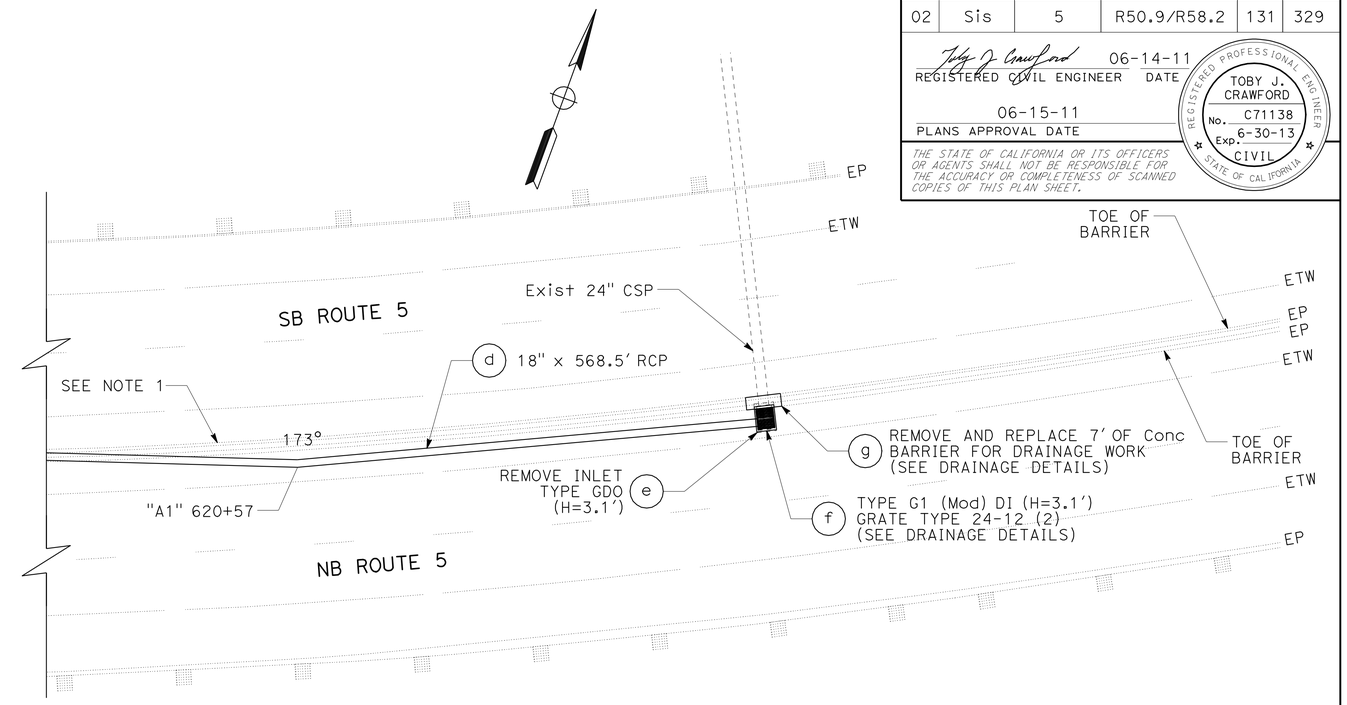

PLAN
"A1" 621+50

DRAINAGE SYSTEM No. 17

SCALE: 1"=15′

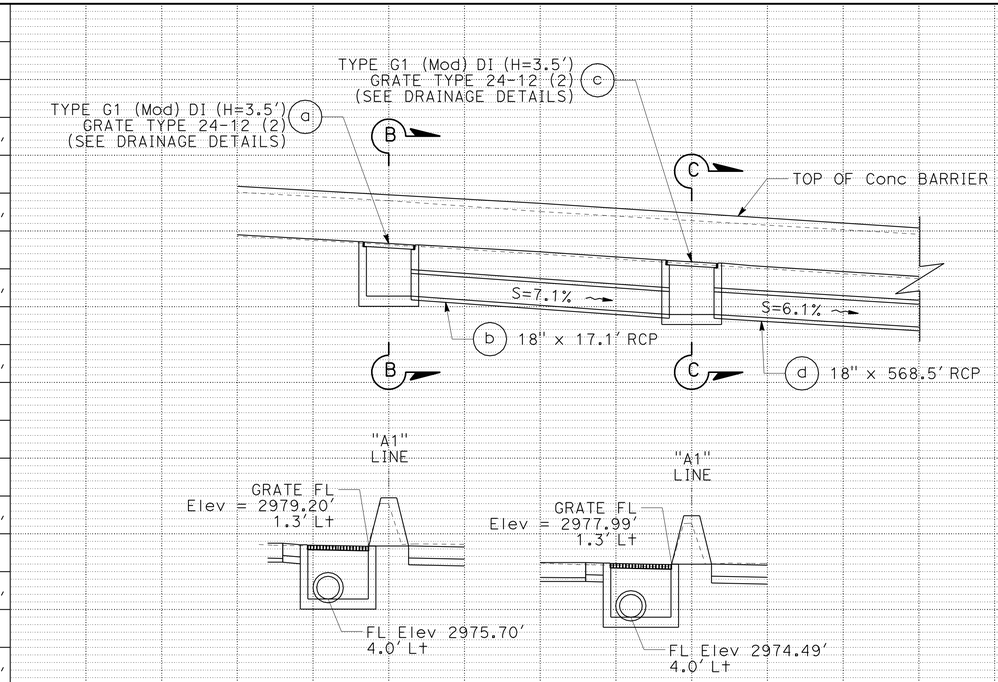

SECTION B-B
"A1" 615+60

SECTION C-C
"A1" 615+80

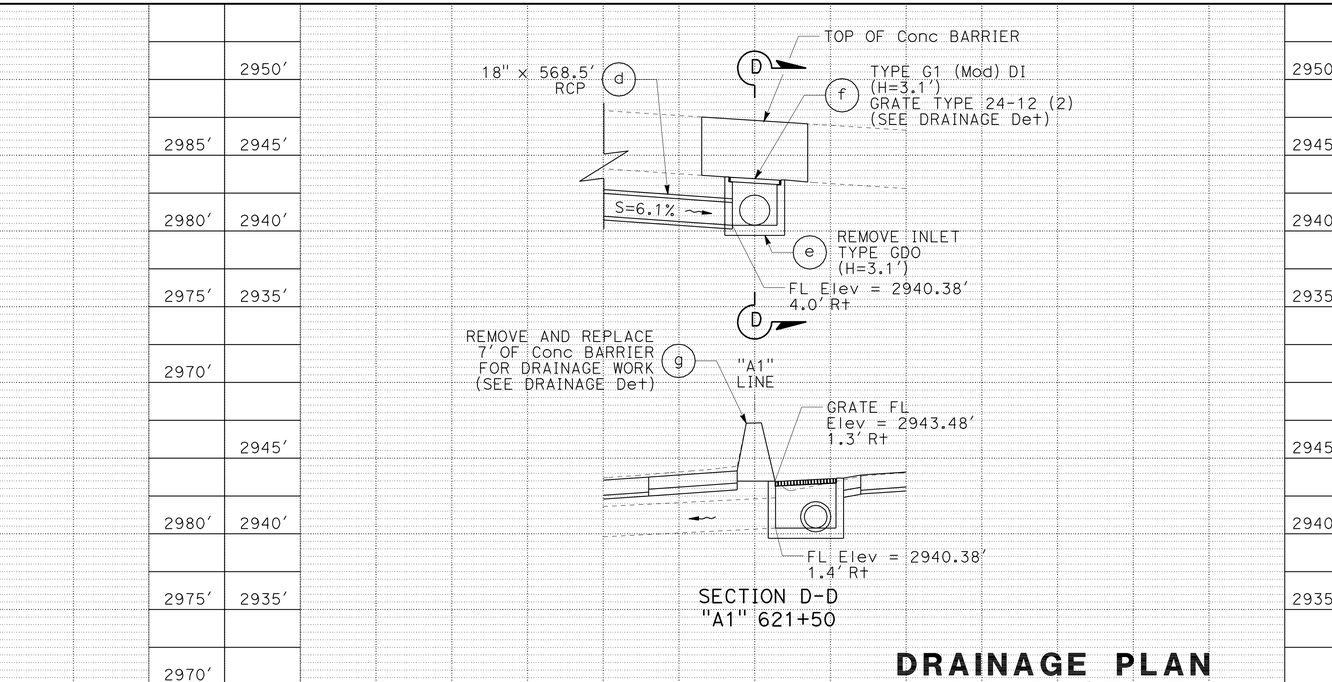

SECTION D-D
"A1" 621+50

PROFILE

SCALE: 1" = 5′

DRAINAGE PLAN AND PROFILE

SCALE: AS SHOWN **D-4**

REVISED BY	DATE REVISED
TOBY CRAWFORD	GINNY SEIBERT
CALCULATED-DESIGNED BY	CHECKED BY
FUNCTIONAL SUPERVISOR	STEVE TOPAL

STATE OF CALIFORNIA - DEPARTMENT OF TRANSPORTATION
Caltrans DESIGN

P:\proj\02\3E760_plans\pse\23e760ia004.dgn

LAST REVISION 06-14-11 | DATE PLOTTED => 17-AUG-2011 | TIME PLOTTED => 10:52

Dist	COUNTY	ROUTE	POST MILES TOTAL PROJECT	SHEET No.	TOTAL SHEETS
02	Sis	5	R50.9/R58.2	132	329

REGISTERED CIVIL ENGINEER 06-14-11 DATE

06-15-11
PLANS APPROVAL DATE

REGISTERED PROFESSIONAL ENGINEER TOBY J. CRAWFORD No. C71138 Exp. 6-30-13 CIVIL STATE OF CALIFORNIA

THE STATE OF CALIFORNIA OR ITS OFFICERS OR AGENTS SHALL NOT BE RESPONSIBLE FOR THE ACCURACY OR COMPLETENESS OF SCANNED COPIES OF THIS PLAN SHEET.

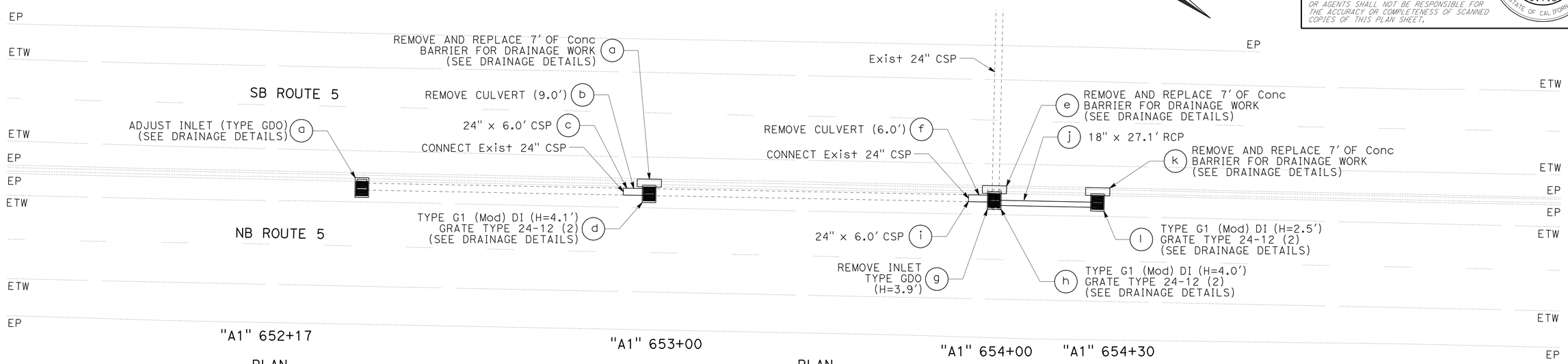

PLAN
DRAINAGE SYSTEM No. 21
SCALE: 1" = 15'

PLAN
DRAINAGE SYSTEM No. 22
SCALE: 1" = 15'

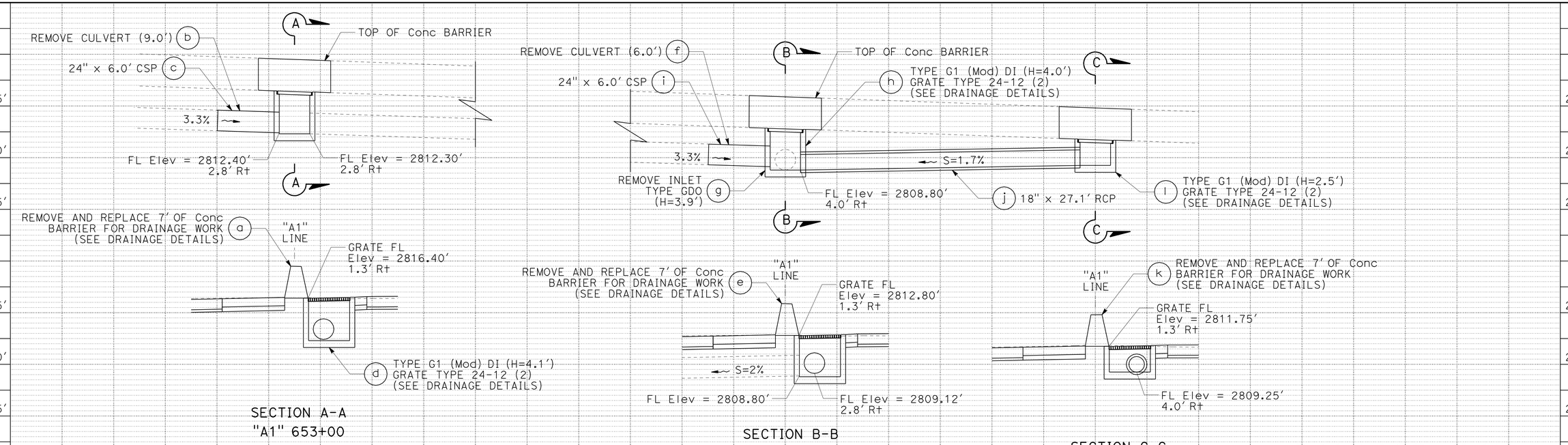

SECTION A-A
"A1" 653+00

SECTION B-B
"A1" 654+00

SECTION C-C
"A1" 654+30

PROFILE
SCALE: 1" = 5'

DRAINAGE PLAN AND PROFILE
SCALE: AS SHOWN **D-5**

REVISED BY | DATE REVISED | CALCULATED-DESIGNED BY | CHECKED BY | FUNCTIONAL SUPERVISOR: STEVE TOPAL

STATE OF CALIFORNIA - DEPARTMENT OF TRANSPORTATION
Caltrans
DESIGN

P:\proj1\02\3E760_plans\pse\23e760ia005.dgn

LAST REVISION 06-14-11 | DATE PLOTTED => 17-AUG-2011 | TIME PLOTTED => 10:52

Dist	COUNTY	ROUTE	POST MILES TOTAL PROJECT	SHEET No.	TOTAL SHEETS
02	Sis	5	R50.9/R58.2	133	329

REGISTERED CIVIL ENGINEER 06-14-11 DATE

06-15-11
PLANS APPROVAL DATE

REGISTERED PROFESSIONAL ENGINEER TOBY J. CRAWFORD No. C71138 Exp. 6-30-13 CIVIL STATE OF CALIFORNIA

THE STATE OF CALIFORNIA OR ITS OFFICERS OR AGENTS SHALL NOT BE RESPONSIBLE FOR THE ACCURACY OR COMPLETENESS OF SCANNED COPIES OF THIS PLAN SHEET.

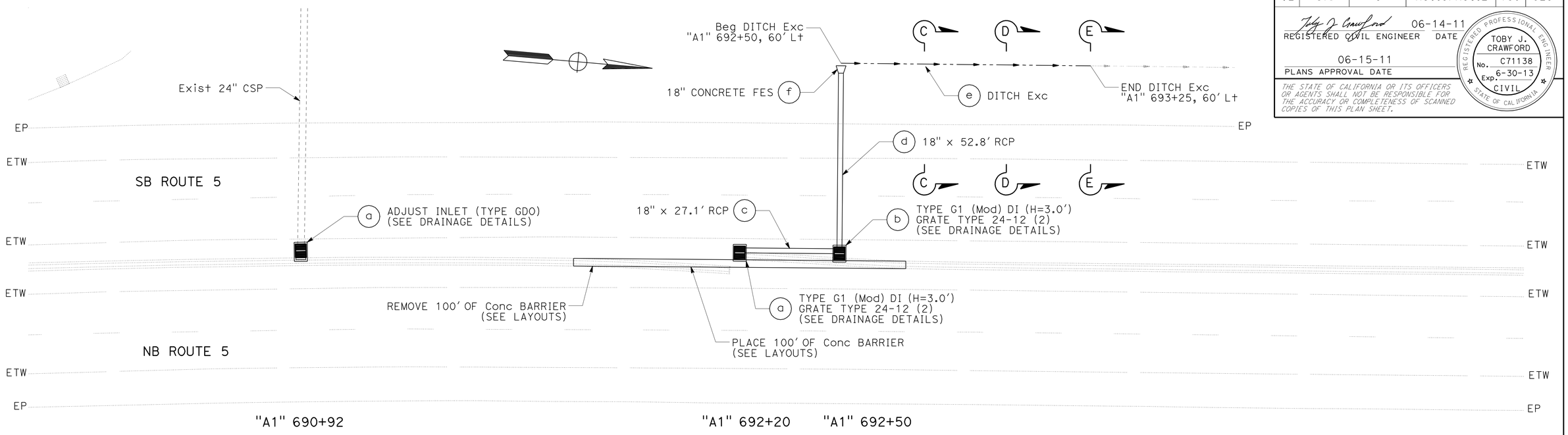

PLAN
DRAINAGE SYSTEM No. 26
SCALE: 1" = 15'

PLAN
DRAINAGE SYSTEM No. 27
SCALE: 1" = 15'

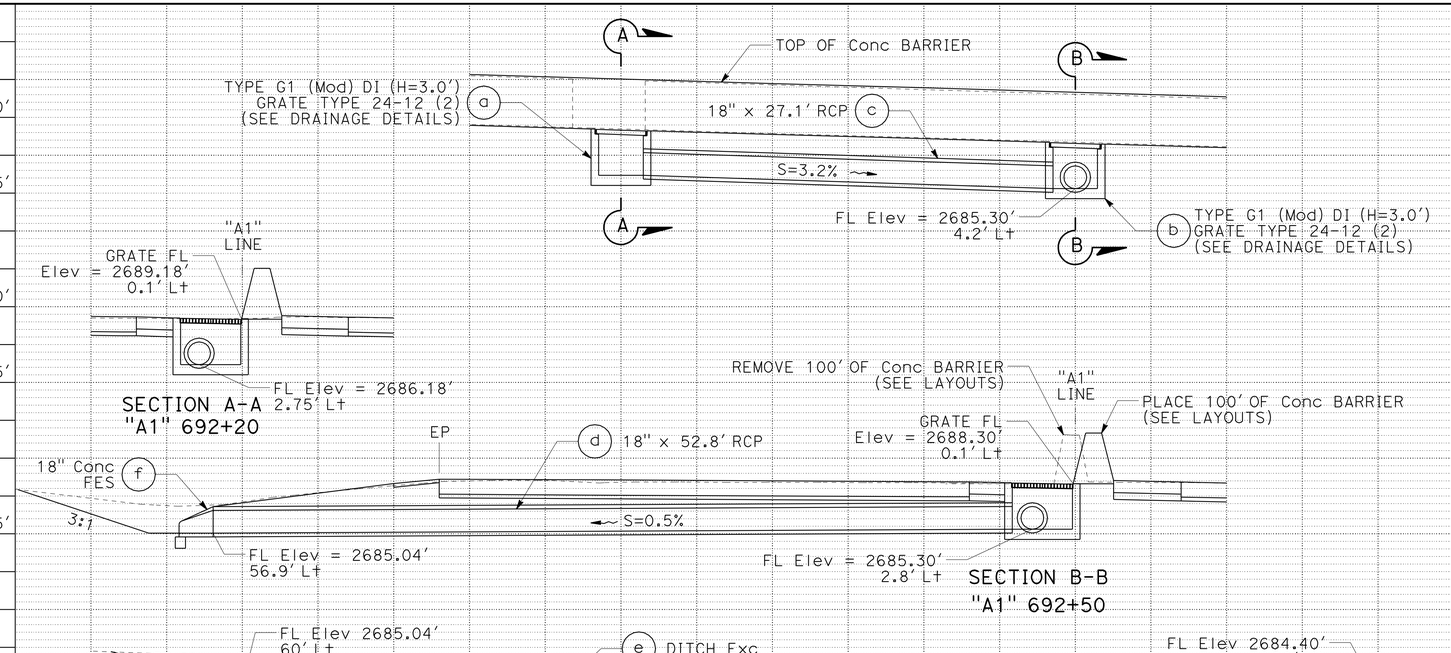

DITCH PROFILE

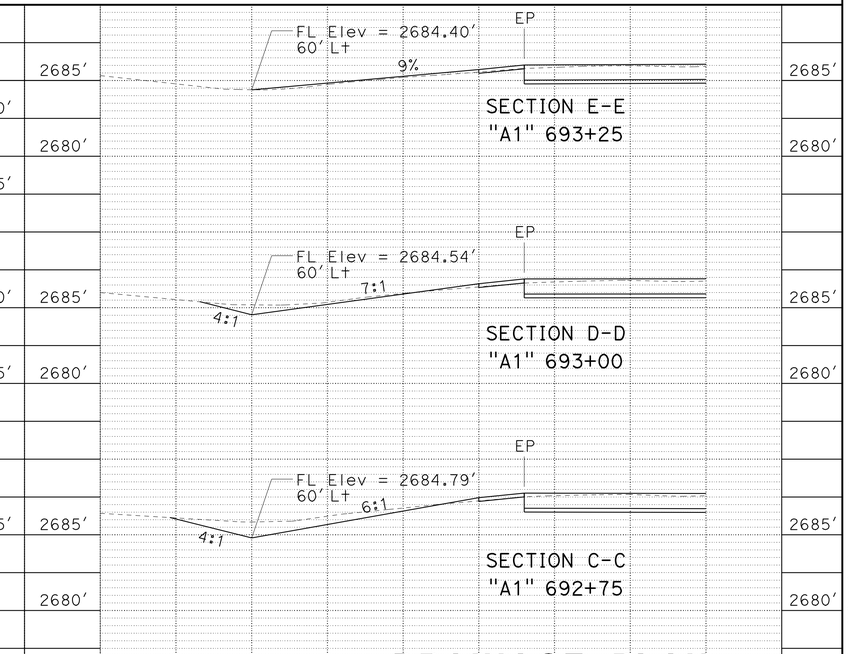

PROFILE
SCALE: 1" = 5'

DRAINAGE PLAN AND PROFILE
SCALE: AS SHOWN **D-6**

REVISED BY	DATE REVISED
TOBY CRAWFORD	GINNY SEIBERT
CALCULATED-DESIGNED BY	CHECKED BY
FUNCTIONAL SUPERVISOR	STEVE TOPAL

STATE OF CALIFORNIA - DEPARTMENT OF TRANSPORTATION
DESIGN
Caltrans

P:\proj\02\3E760_plans\pse\23e760ia006.dgn

LAST REVISION 06-14-11 DATE PLOTTED => 17-AUG-2011 TIME PLOTTED => 10:52

Dist	COUNTY	ROUTE	POST MILES TOTAL PROJECT	SHEET No.	TOTAL SHEETS
02	Sis	5	R50.9/R58.2	134	329

REGISTERED CIVIL ENGINEER 06-14-11 DATE

06-15-11
PLANS APPROVAL DATE

REGISTERED PROFESSIONAL ENGINEER TOBY J. CRAWFORD No. C71138 Exp. 6-30-13 CIVIL STATE OF CALIFORNIA

THE STATE OF CALIFORNIA OR ITS OFFICERS OR AGENTS SHALL NOT BE RESPONSIBLE FOR THE ACCURACY OR COMPLETENESS OF SCANNED COPIES OF THIS PLAN SHEET.

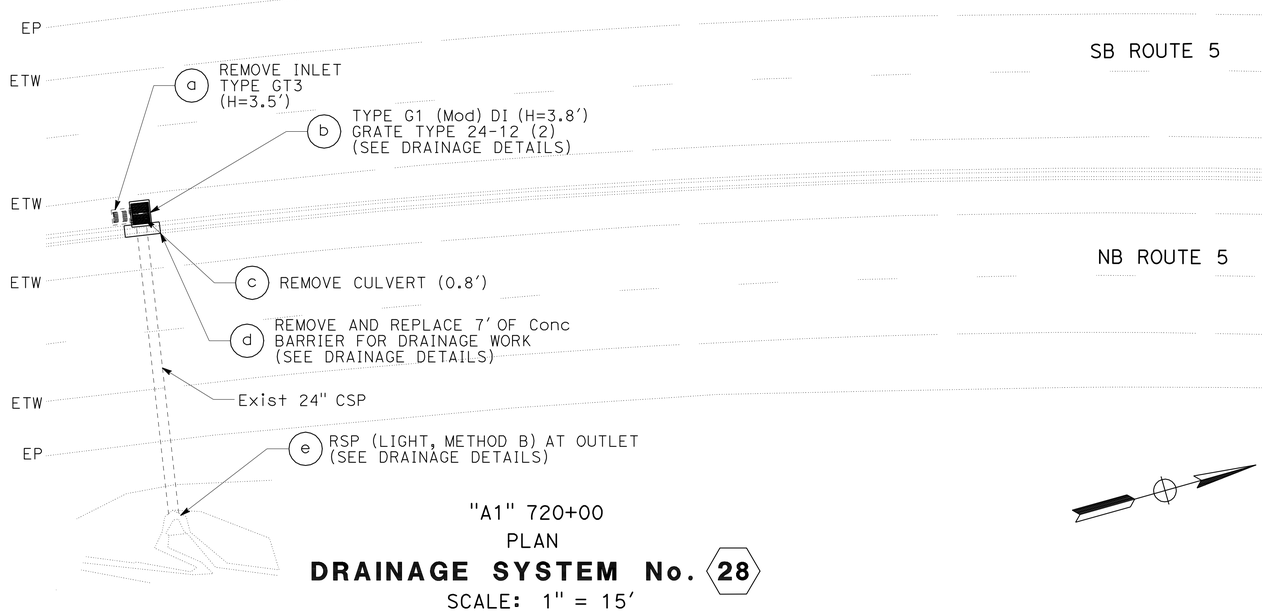

"A1" 720+00
PLAN
DRAINAGE SYSTEM No. 28
SCALE: 1" = 15'

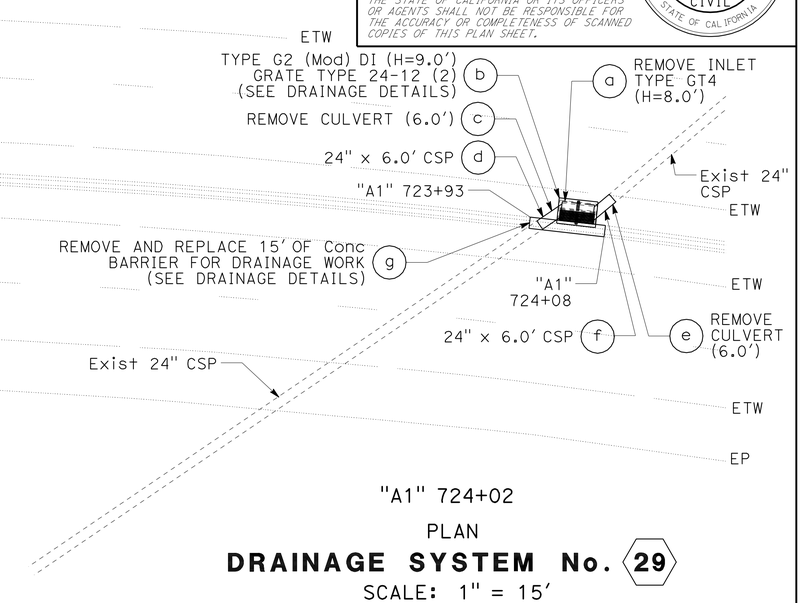

"A1" 724+02
PLAN
DRAINAGE SYSTEM No. 29
SCALE: 1" = 15'

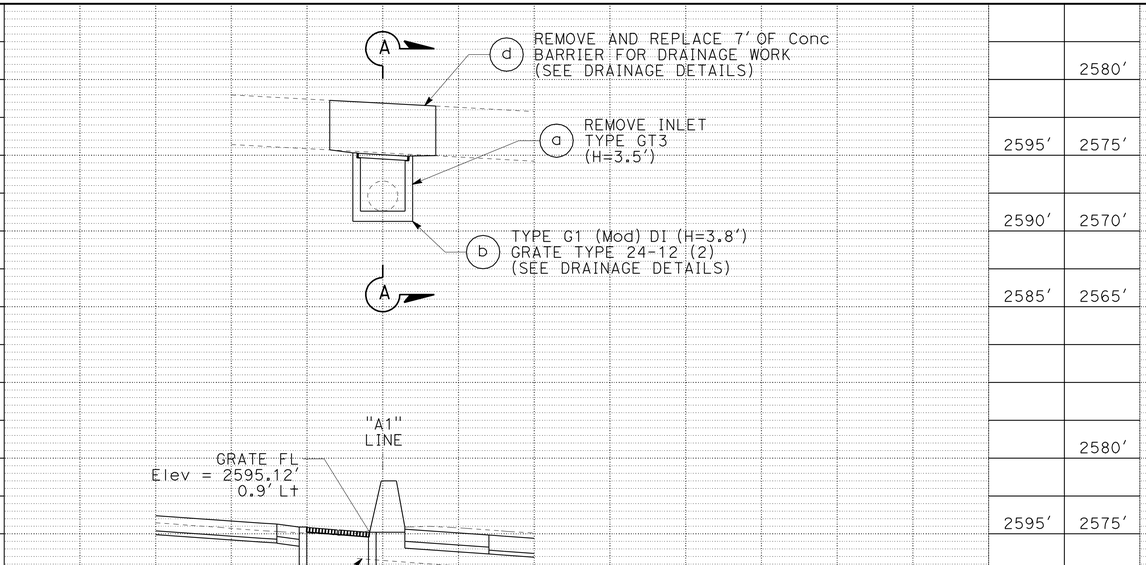

SECTION A-A
"A1" 720+00

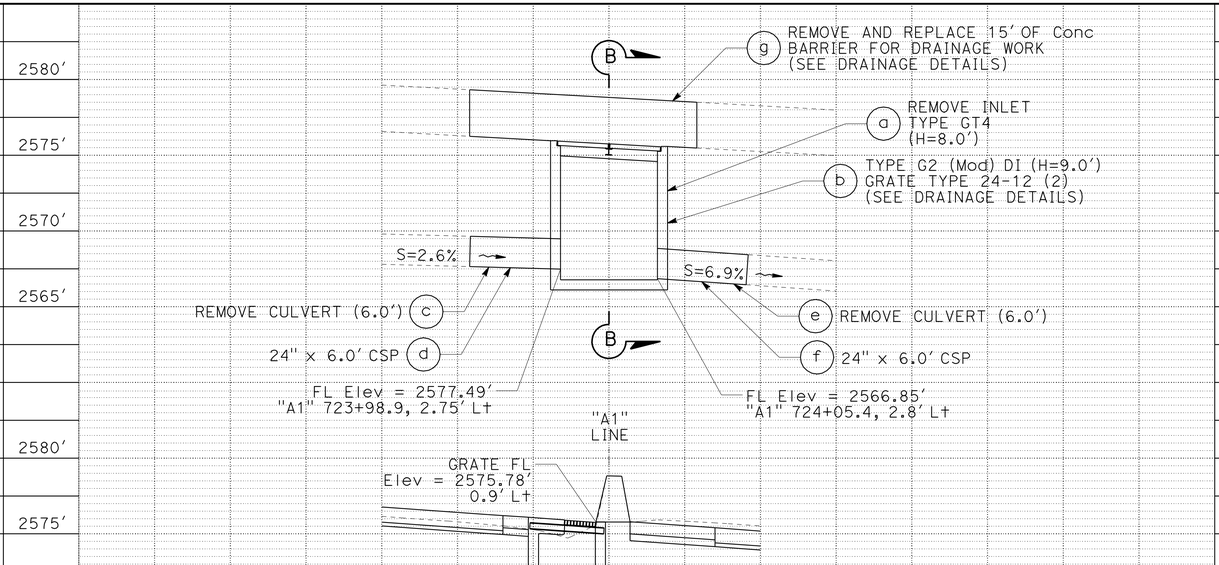

PROFILE
SCALE: 1" = 5'

SECTION B-B
"A1" 724+02

DRAINAGE PLAN AND PROFILE

SCALE: AS SHOWN **D-7**

REVISED BY	DATE REVISED

TOBY CRAWFORD — GINNY SEIBERT — CALCULATED-DESIGNED BY — CHECKED BY

FUNCTIONAL SUPERVISOR: STEVE TOPAL

STATE OF CALIFORNIA - DEPARTMENT OF TRANSPORTATION — DESIGN

P:\proj1\02\3E760_plans\pse\23e760ia007.dgn

LAST REVISION 06-14-11 — DATE PLOTTED => 17-AUG-2011 — TIME PLOTTED => 10:52

Dist	COUNTY	ROUTE	POST MILES TOTAL PROJECT	SHEET No.	TOTAL SHEETS
02	Sis	5	R50.9/R58.2	135	329

REGISTERED CIVIL ENGINEER 06-14-11 DATE

06-15-11
PLANS APPROVAL DATE

REGISTERED PROFESSIONAL ENGINEER TOBY J. CRAWFORD No. C71138 Exp. 6-30-13 CIVIL STATE OF CALIFORNIA

THE STATE OF CALIFORNIA OR ITS OFFICERS OR AGENTS SHALL NOT BE RESPONSIBLE FOR THE ACCURACY OR COMPLETENESS OF SCANNED COPIES OF THIS PLAN SHEET.

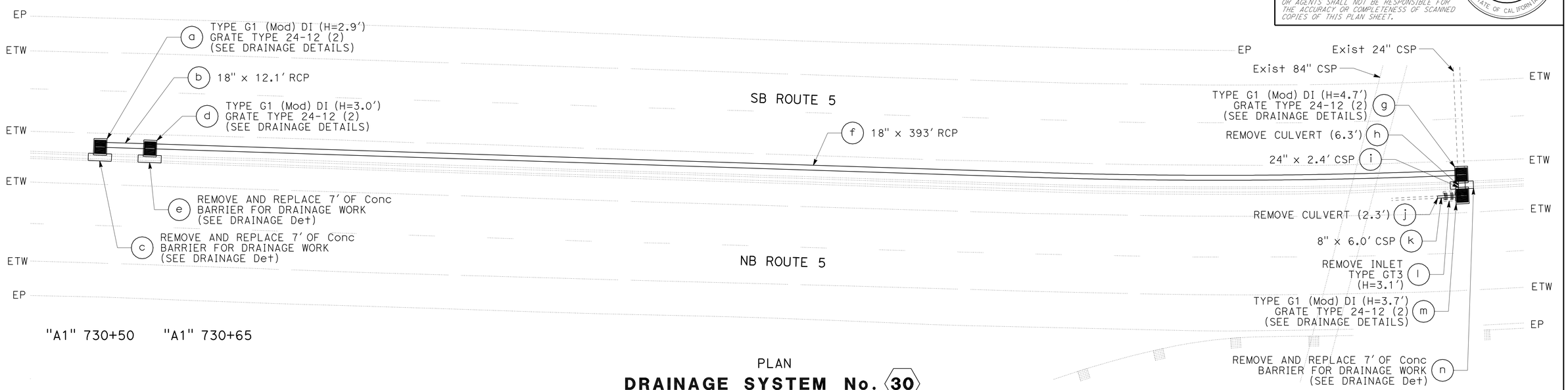

PLAN

DRAINAGE SYSTEM No. 30

SCALE: 1" = 15'

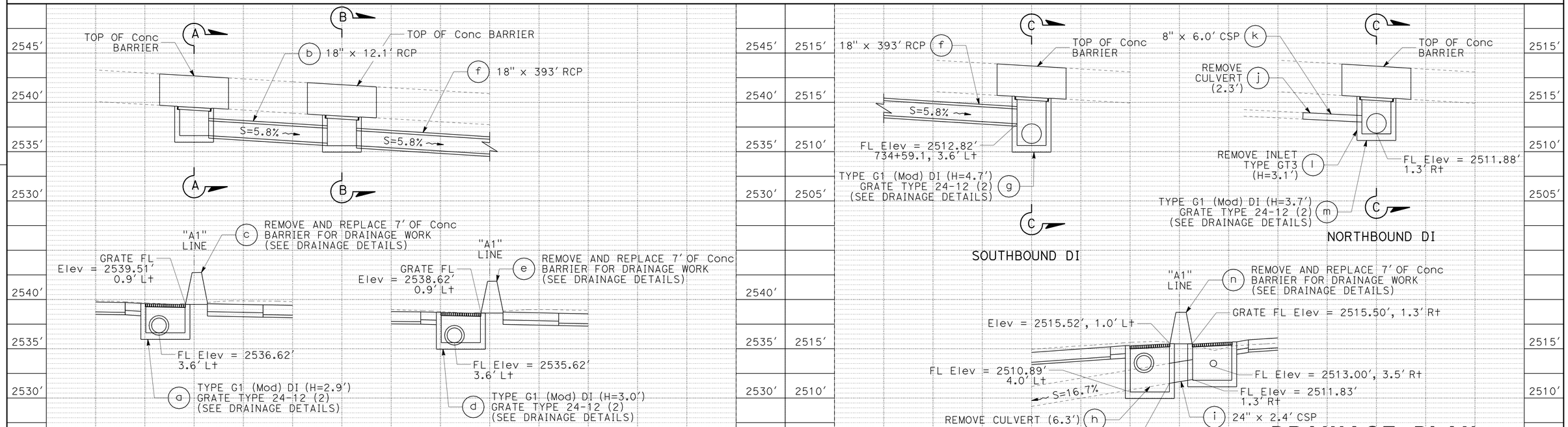

PROFILE

SCALE: 1" = 5'

DRAINAGE PLAN AND PROFILE

SCALE: AS SHOWN

D-8

REVISED BY | DATE REVISED

TOBY CRAWFORD | GINNY SEIBERT

CALCULATED-DESIGNED BY | CHECKED BY

FUNCTIONAL SUPERVISOR: STEVE TOPAL

STATE OF CALIFORNIA - DEPARTMENT OF TRANSPORTATION

DESIGN

Caltrans

P:\proj\02\3E760_plans\pse\23e760ia008.dgn

LAST REVISION 06-14-11 | DATE PLOTTED => 17-AUG-2011 | TIME PLOTTED => 10:52

Dist	COUNTY	ROUTE	POST MILES TOTAL PROJECT	SHEET No.	TOTAL SHEETS
02	Sis	5	R50.9/R58.2	136	329

REGISTERED CIVIL ENGINEER 06-14-11 DATE

06-15-11
PLANS APPROVAL DATE

REGISTERED PROFESSIONAL ENGINEER TOBY J. CRAWFORD No. C71138 Exp. 6-30-13 CIVIL STATE OF CALIFORNIA

THE STATE OF CALIFORNIA OR ITS OFFICERS OR AGENTS SHALL NOT BE RESPONSIBLE FOR THE ACCURACY OR COMPLETENESS OF SCANNED COPIES OF THIS PLAN SHEET.

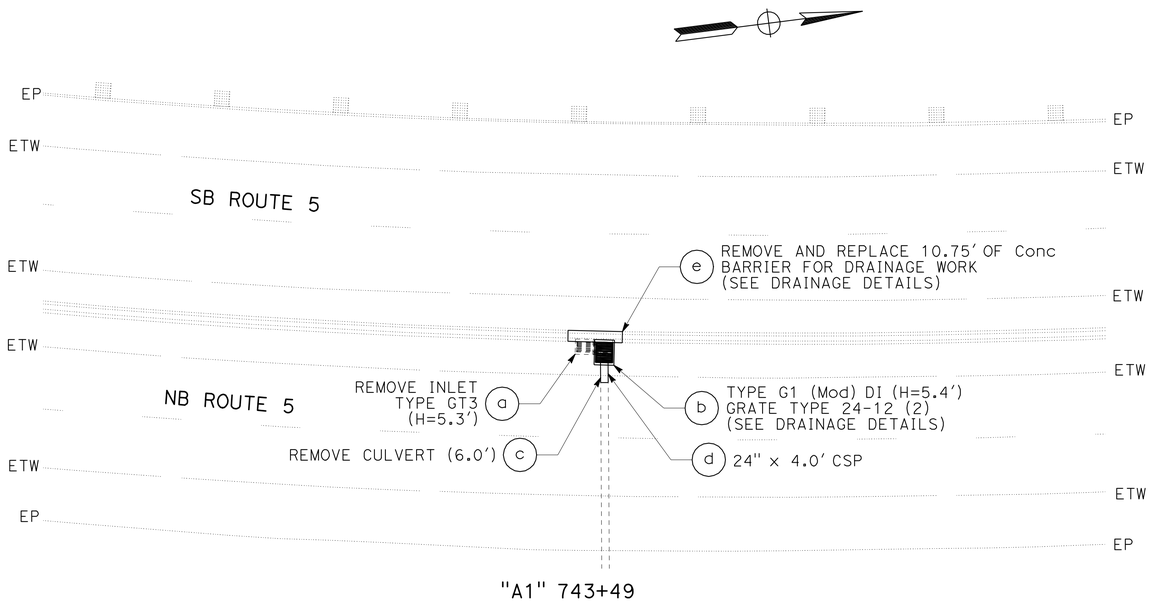

PLAN

DRAINAGE SYSTEM No. 31

SCALE: 1" = 15'

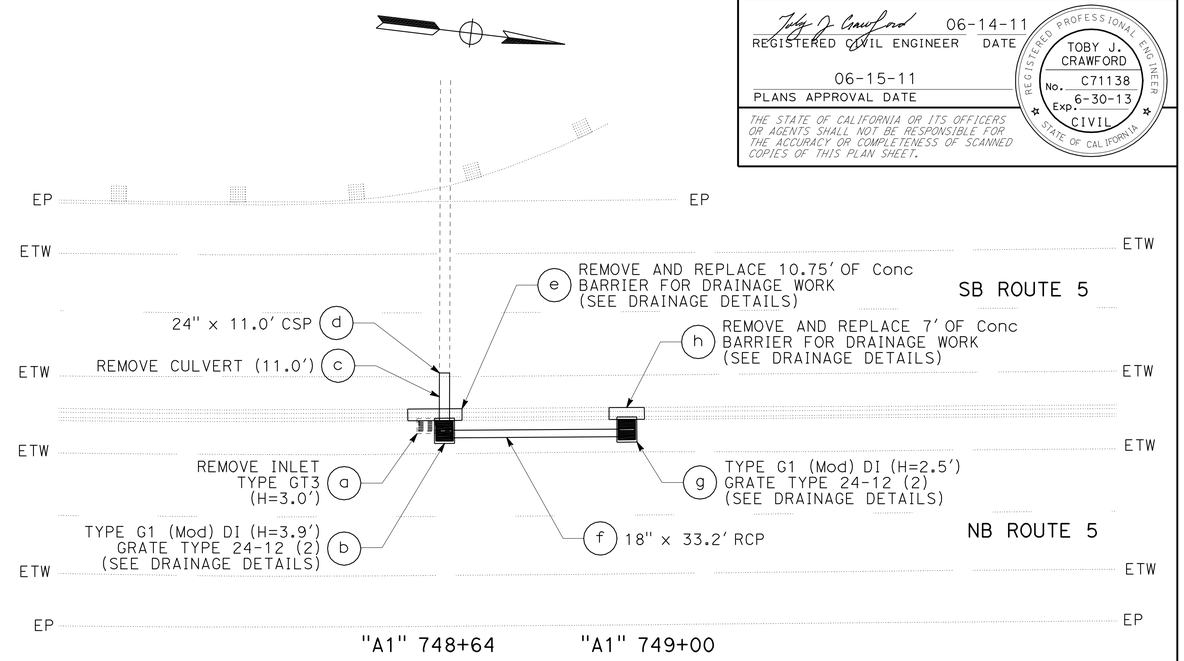

PLAN

DRAINAGE SYSTEM No. 32

SCALE: 1" = 15'

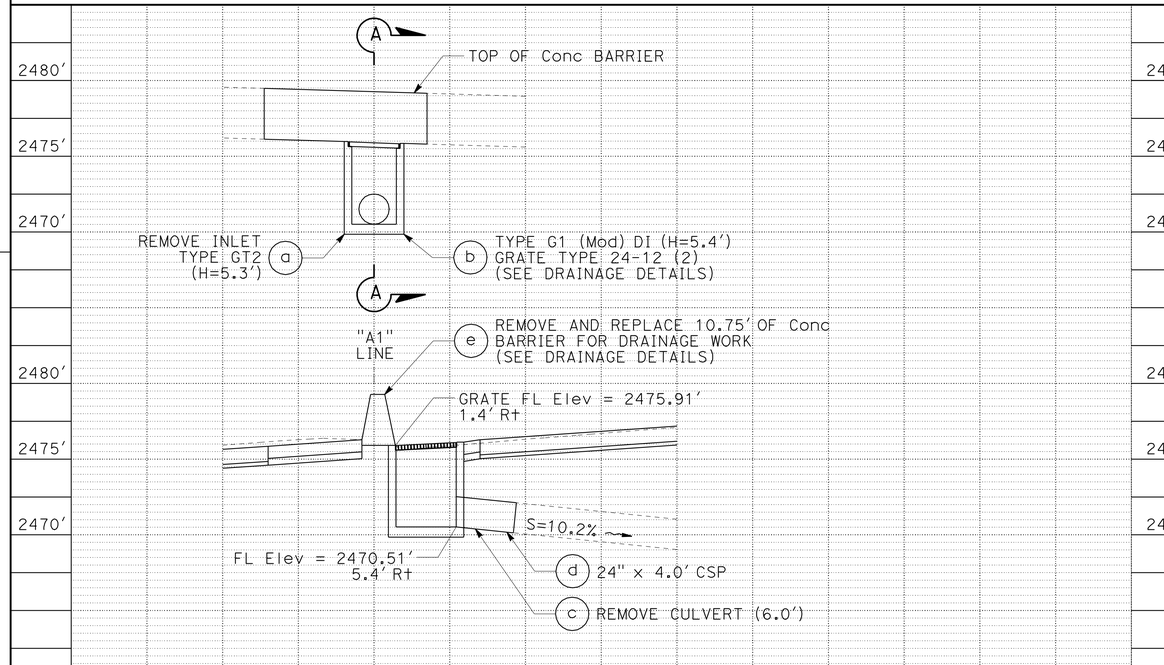

SECTION A-A
"A1" 743+49

PROFILE
SCALE: 1" = 5'

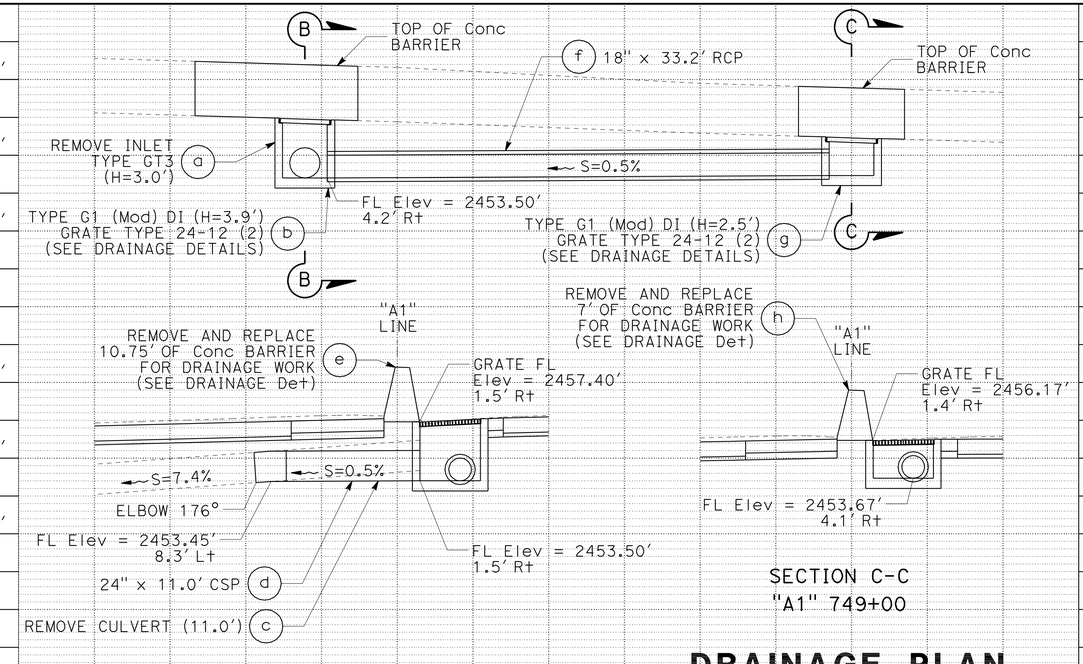

SECTION B-B
"A1" 748+64

SECTION C-C
"A1" 749+00

DRAINAGE PLAN AND PROFILE

SCALE: AS SHOWN **D-9**

REVISED BY | DATE REVISED
TOBY CRAWFORD | GINNY SEIBERT
CALCULATED-DESIGNED BY | CHECKED BY
FUNCTIONAL SUPERVISOR: STEVE TOPAL

STATE OF CALIFORNIA - DEPARTMENT OF TRANSPORTATION
Caltrans
DESIGN

P:\proj\02\3E760_plans\pse\23e760ia009.dgn

LAST REVISION 06-14-11 | DATE PLOTTED => 17-AUG-2011 | TIME PLOTTED => 10:52

Dist	COUNTY	ROUTE	POST MILES TOTAL PROJECT	SHEET No.	TOTAL SHEETS
02	Sis	5	R50.9/R58.2	137	329

REGISTERED CIVIL ENGINEER 06-14-11 DATE

06-15-11
PLANS APPROVAL DATE

REGISTERED PROFESSIONAL ENGINEER TOBY J. CRAWFORD No. C71138 Exp. 6-30-13 CIVIL STATE OF CALIFORNIA

THE STATE OF CALIFORNIA OR ITS OFFICERS OR AGENTS SHALL NOT BE RESPONSIBLE FOR THE ACCURACY OR COMPLETENESS OF SCANNED COPIES OF THIS PLAN SHEET.

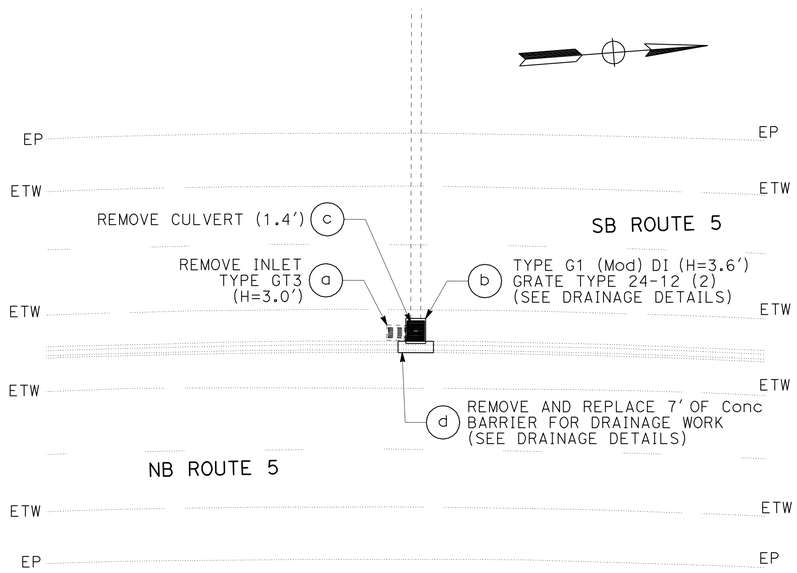

"A1" 755+20
PLAN
DRAINAGE SYSTEM No. 33
SCALE: 1" = 15′

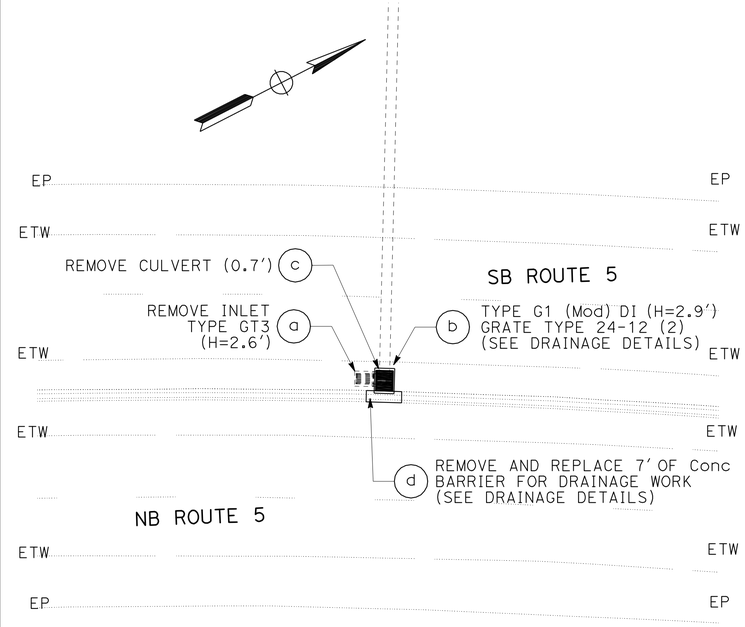

"A1" 762+50
PLAN
DRAINAGE SYSTEM No. 34
SCALE: 1" = 15′

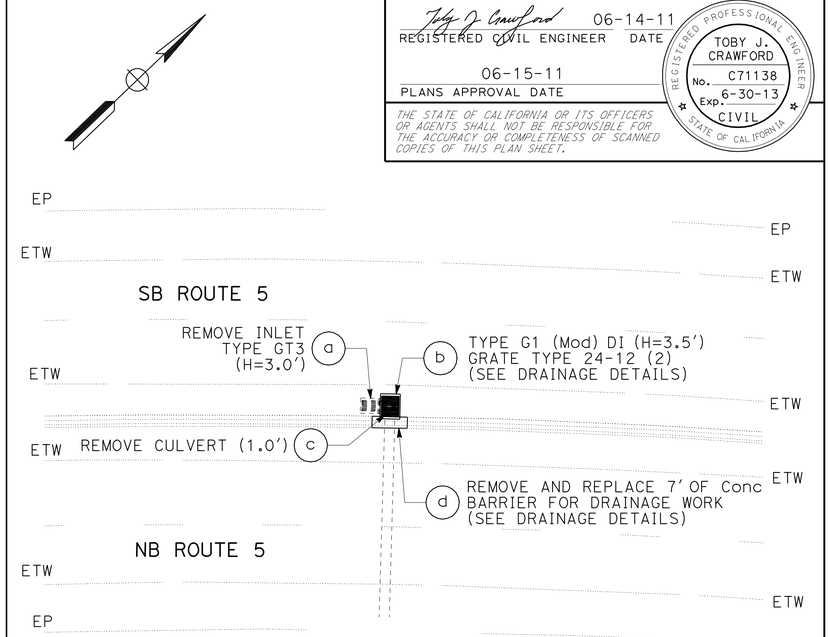

"A1" 767+50
PLAN
DRAINAGE SYSTEM No. 35
SCALE: 1" = 15′

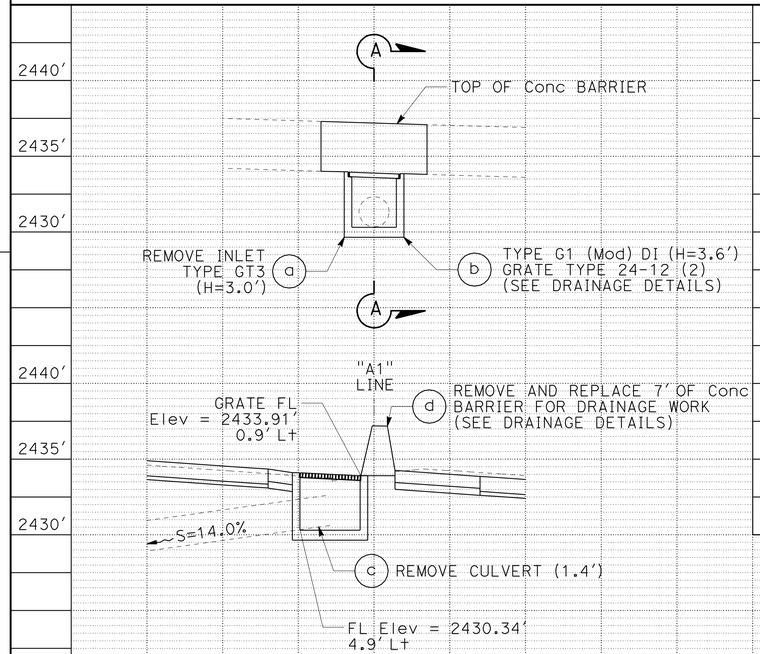

SECTION A-A
"A1" 755+20

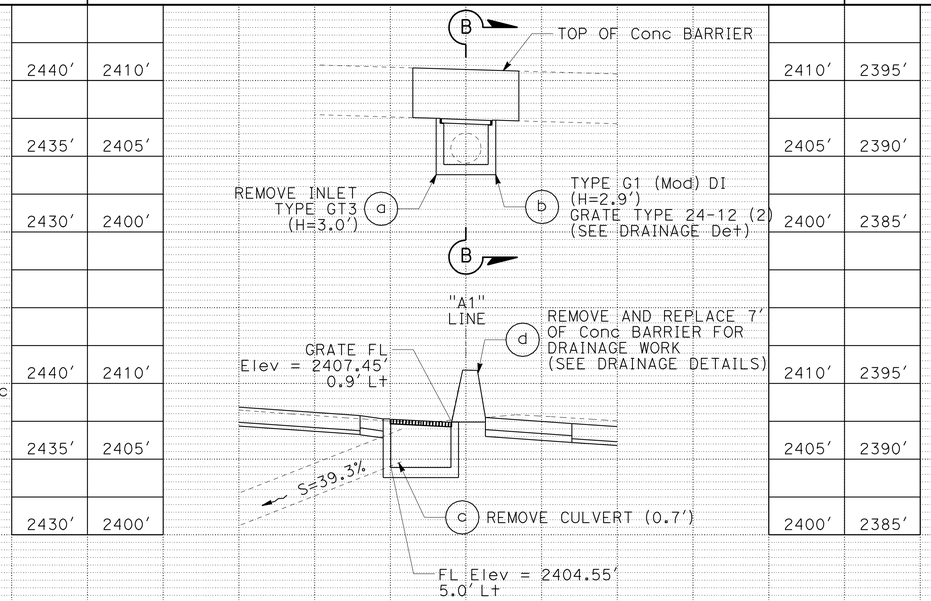

SECTION B-B
"A1" 762+50

PROFILES
SCALE: 1" = 5′

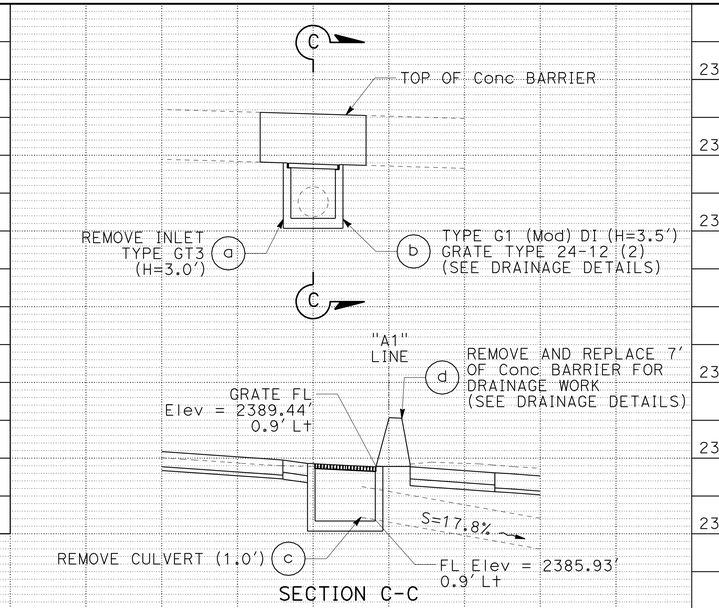

SECTION C-C
"A1" 767+50

DRAINAGE PLAN AND PROFILE
SCALE: AS SHOWN **D-10**

REVISED BY	DATE REVISED
TOBY CRAWFORD	GINNY SEIBERT
CALCULATED-DESIGNED BY	CHECKED BY
FUNCTIONAL SUPERVISOR	STEVE TOPAL

STATE OF CALIFORNIA - DEPARTMENT OF TRANSPORTATION
Caltrans
DESIGN

P:\proj1\02\3E760_plans\pse\23e760ia010.dgn

LAST REVISION 06-14-11 DATE PLOTTED => 17-AUG-2011 TIME PLOTTED => 10:52

Dist	COUNTY	ROUTE	POST MILES TOTAL PROJECT	SHEET No.	TOTAL SHEETS
02	Sis	5	R50.9/R58.2	138	329

REGISTERED CIVIL ENGINEER 06-14-11 DATE

06-15-11
PLANS APPROVAL DATE

REGISTERED PROFESSIONAL ENGINEER TOBY J. CRAWFORD No. C71138 Exp. 6-30-13 CIVIL STATE OF CALIFORNIA

THE STATE OF CALIFORNIA OR ITS OFFICERS OR AGENTS SHALL NOT BE RESPONSIBLE FOR THE ACCURACY OR COMPLETENESS OF SCANNED COPIES OF THIS PLAN SHEET.

NOTE:

1. SEE LAYOUTS AND STAGE CONSTRUCTION SHEETS FOR LOCATIONS OF CONCRETE BARRIER REMOVAL AND REPLACEMENT.

DRAINAGE SYSTEM No. 37

SCALE: 1" = 15'

PLAN

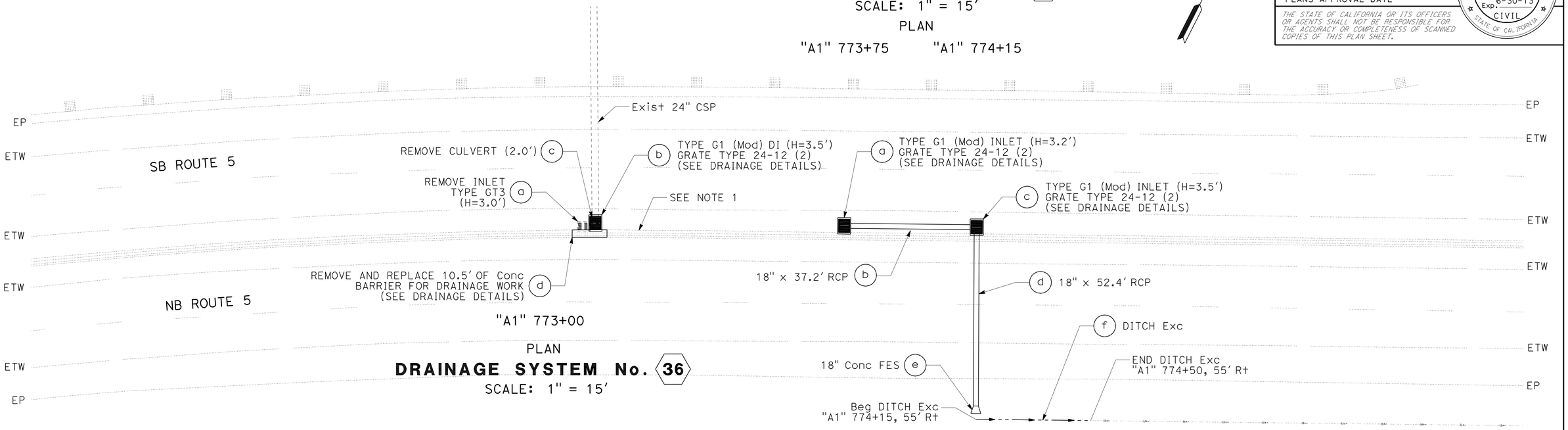

PLAN

DRAINAGE SYSTEM No. 36

SCALE: 1" = 15'

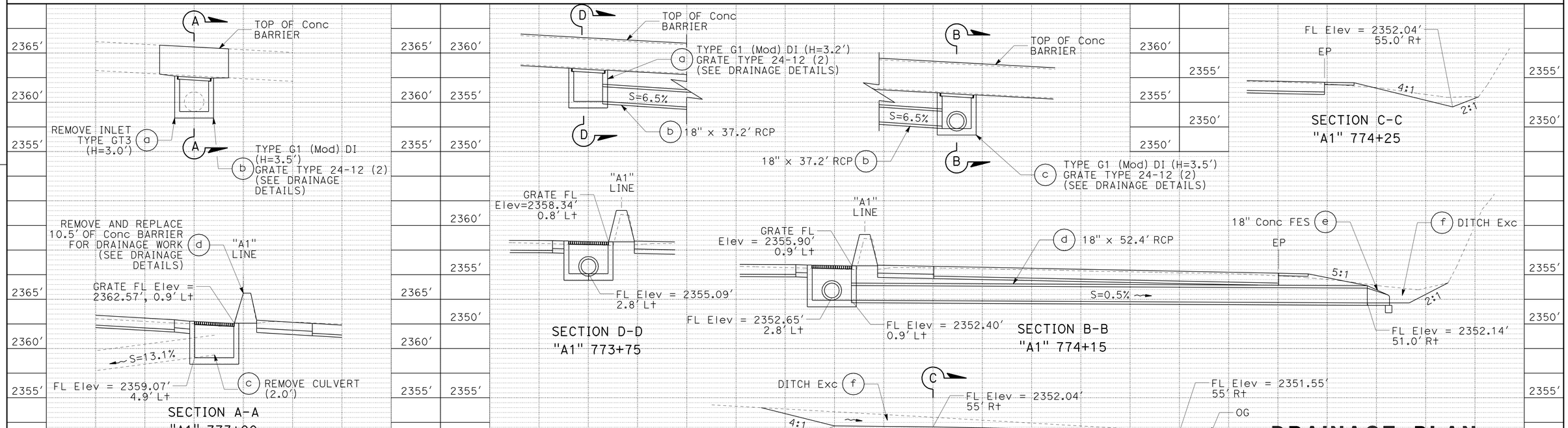

PROFILE

SCALE: 1" = 5'

DRAINAGE PLAN AND PROFILE

SCALE: AS SHOWN **D-11**

REVISED BY | DATE REVISED
TOBY CRAWFORD | GINNY SEIBERT
CALCULATED-DESIGNED BY | CHECKED BY
FUNCTIONAL SUPERVISOR | STEVE TOPAL

STATE OF CALIFORNIA - DEPARTMENT OF TRANSPORTATION
Caltrans
DESIGN

P:\proj1\02\3E760_plans\pse\23e760ia011.dgn

LAST REVISION 06-14-11 | DATE PLOTTED => 17-AUG-2011 | TIME PLOTTED => 10:53

Dist	COUNTY	ROUTE	POST MILES TOTAL PROJECT	SHEET No.	TOTAL SHEETS
02	Sis	5	R50.9/R58.2	139	329

REGISTERED CIVIL ENGINEER 06-14-11 DATE

06-15-11
PLANS APPROVAL DATE

REGISTERED PROFESSIONAL ENGINEER TOBY J. CRAWFORD No. C71138 Exp. 6-30-13 CIVIL STATE OF CALIFORNIA

THE STATE OF CALIFORNIA OR ITS OFFICERS OR AGENTS SHALL NOT BE RESPONSIBLE FOR THE ACCURACY OR COMPLETENESS OF SCANNED COPIES OF THIS PLAN SHEET.

NOTES:

1. SEE LAYOUTS AND STAGE CONSTRUCTION SHEETS FOR LOCATIONS OF CONCRETE BARRIER REMOVAL AND REPLACEMENT.

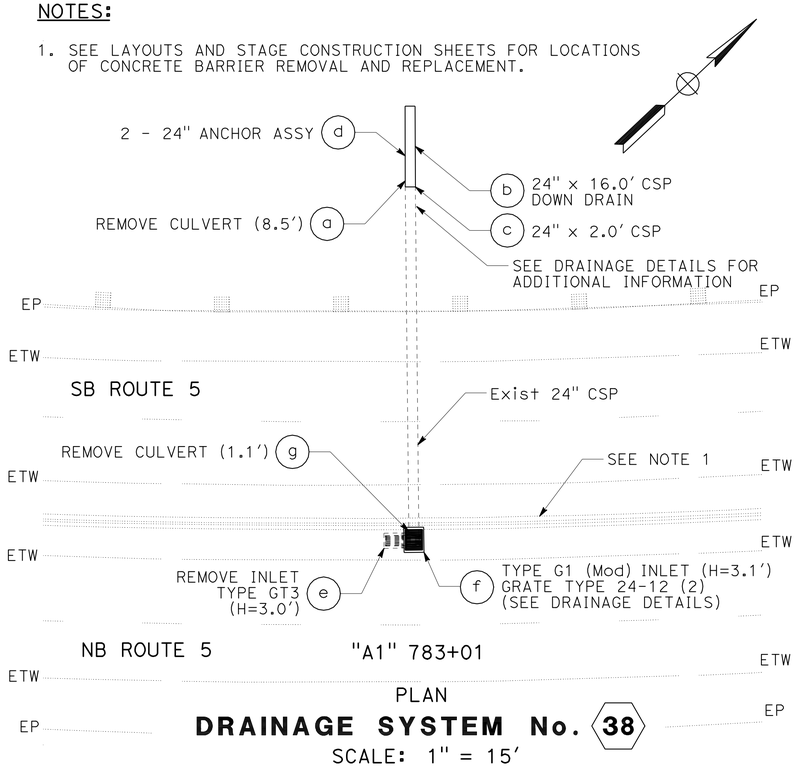

PLAN

DRAINAGE SYSTEM No. 38

SCALE: 1" = 15'

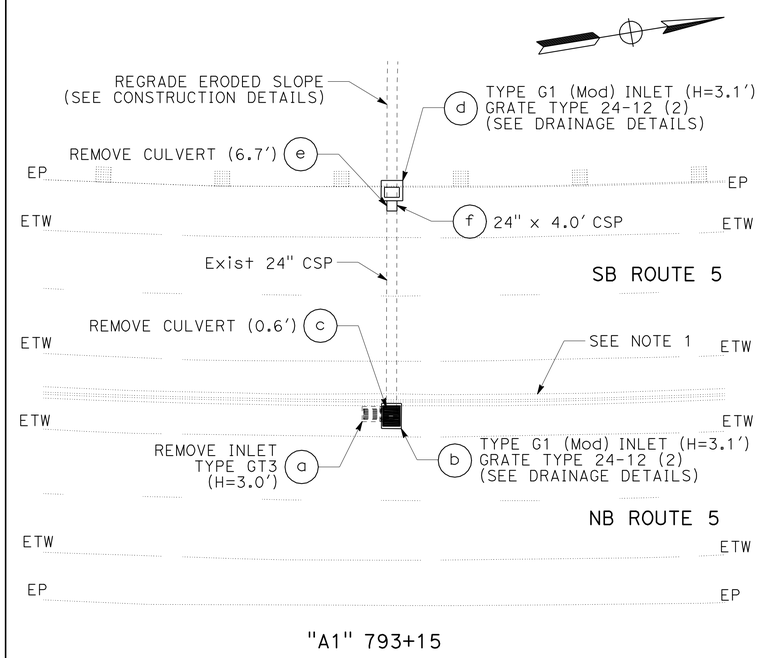

PLAN

DRAINAGE SYSTEM No. 39

SCALE: 1" = 15'

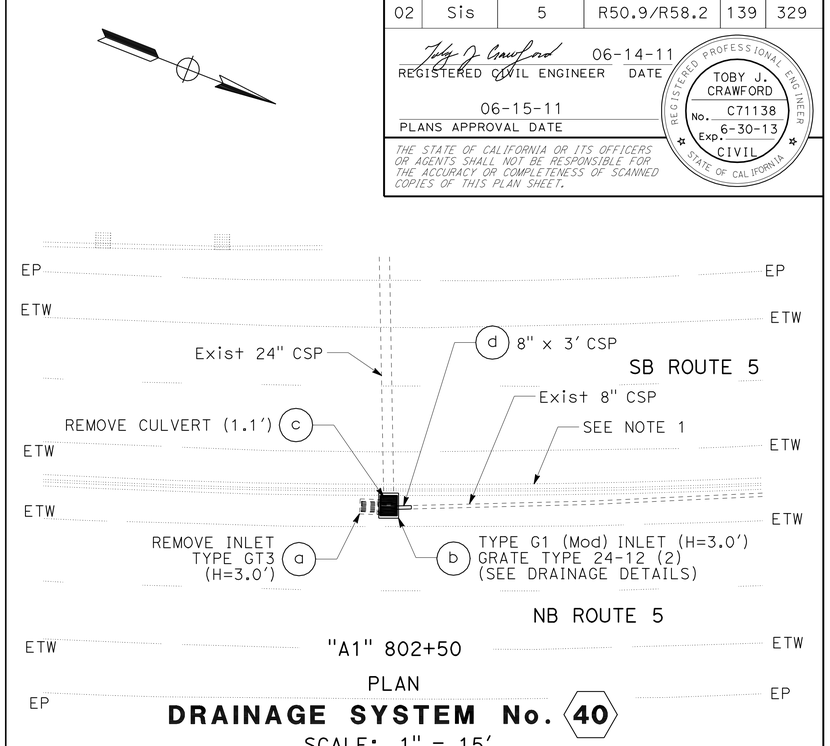

PLAN

DRAINAGE SYSTEM No. 40

SCALE: 1" = 15'

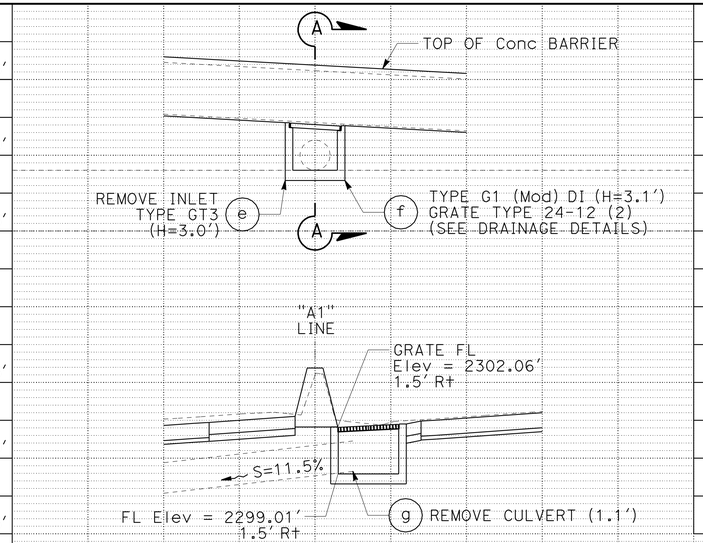

SECTION A-A
"A1" 783+01

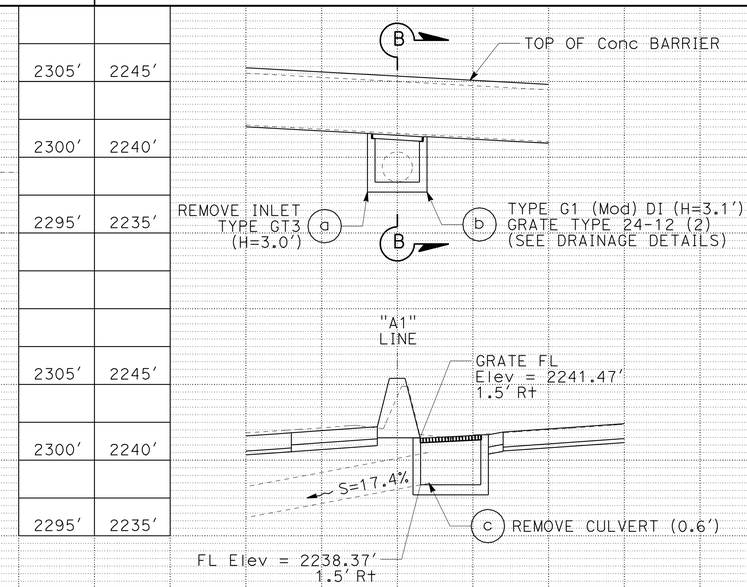

SECTION B-B
"A1" 793+15

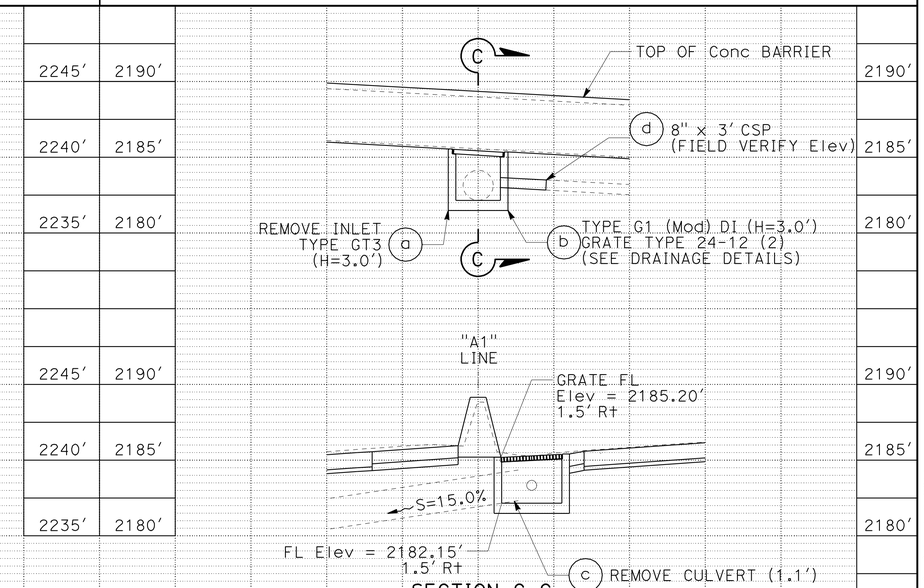

SECTION C-C
"A1" 802+50

PROFILE

SCALE: 1" = 5'

DRAINAGE PLAN AND PROFILE

SCALE: AS SHOWN **D-12**

REVISED BY | DATE REVISED
TOBY CRAWFORD | GINNY SEIBERT
CALCULATED-DESIGNED BY | CHECKED BY
FUNCTIONAL SUPERVISOR: STEVE TOPAL

STATE OF CALIFORNIA - DEPARTMENT OF TRANSPORTATION
Caltrans® DESIGN

P:\proj1\02\3E760_plans\pse\23e760ia012.dgn

LAST REVISION 06-14-11 | DATE PLOTTED => 17-AUG-2011 | TIME PLOTTED => 10:53

Dist	COUNTY	ROUTE	POST MILES TOTAL PROJECT	SHEET No.	TOTAL SHEETS
02	Sis	5	R50.9/R58.2	140	329

REGISTERED CIVIL ENGINEER 06-14-11 DATE

06-15-11
PLANS APPROVAL DATE

REGISTERED PROFESSIONAL ENGINEER TOBY J. CRAWFORD C71138 Exp. 6-30-13 CIVIL STATE OF CALIFORNIA

THE STATE OF CALIFORNIA OR ITS OFFICERS OR AGENTS SHALL NOT BE RESPONSIBLE FOR THE ACCURACY OR COMPLETENESS OF SCANNED COPIES OF THIS PLAN SHEET.

NOTES:

1. SEE LAYOUTS AND STAGE CONSTRUCTION SHEETS FOR LOCATIONS OF CONCRETE BARRIER REMOVAL AND REPLACEMENT.

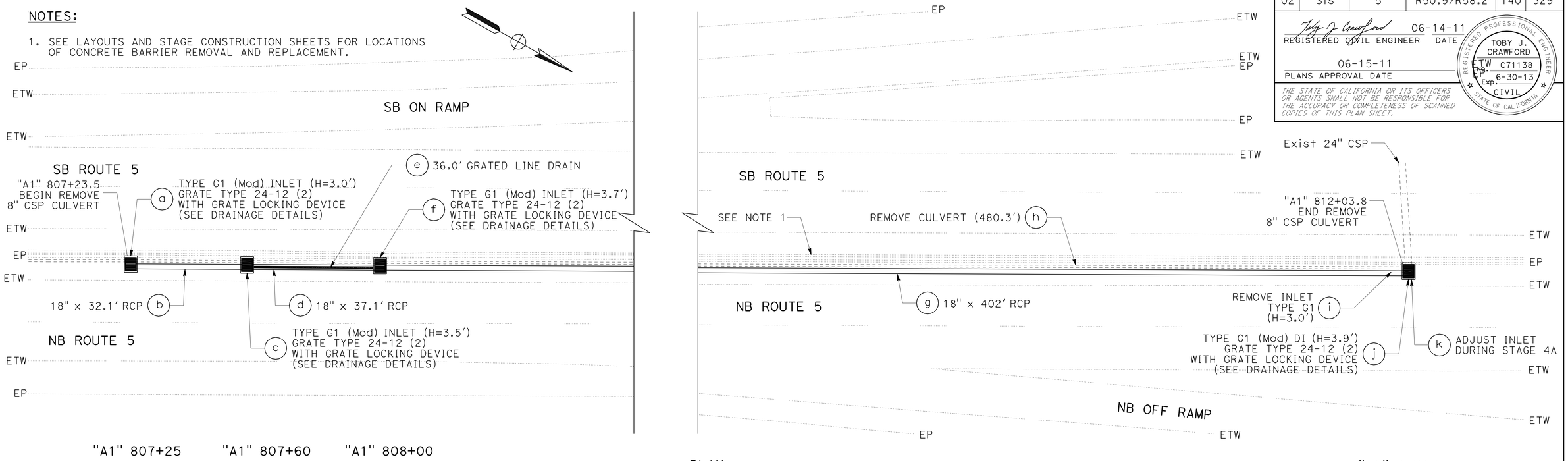

PLAN

DRAINAGE SYSTEM No. 41

SCALE: 1"=15'

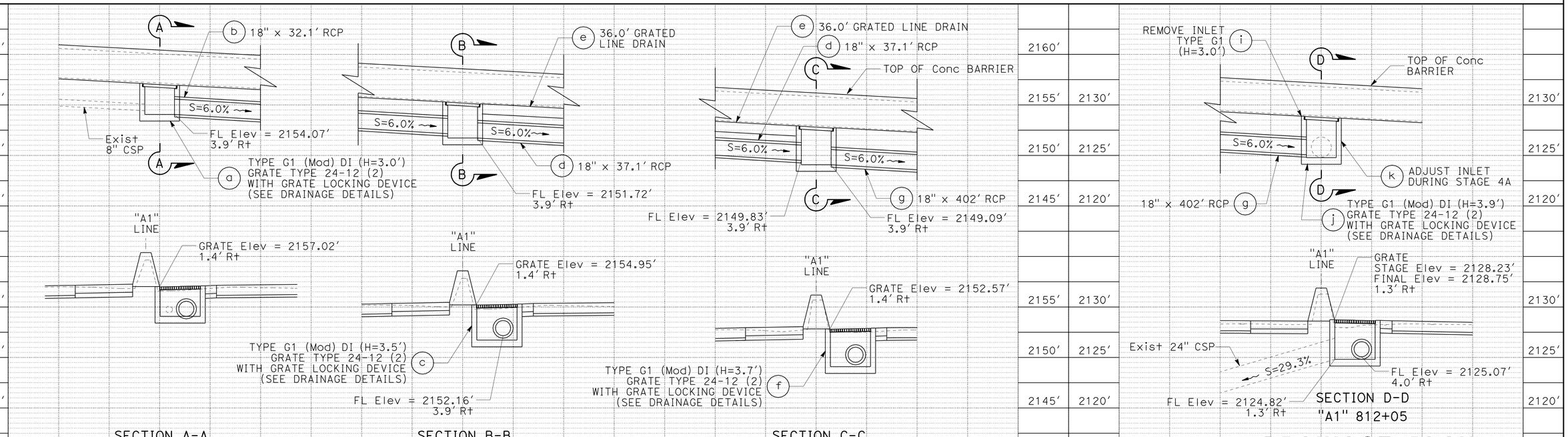

PROFILE

SCALE: 1" = 5'

DRAINAGE PLAN AND PROFILES

SCALE: AS SHOWN **D-13**

REVISED BY | DATE REVISED
TOBY CRAWFORD | GINNY SEIBERT
CALCULATED-DESIGNED BY | CHECKED BY
FUNCTIONAL SUPERVISOR: STEVE TOPAL

STATE OF CALIFORNIA - DEPARTMENT OF TRANSPORTATION
Caltrans® DESIGN

P:\proj1\02\3E760_plans\pse\23e760ia013.dgn

LAST REVISION 06-14-11 | DATE PLOTTED => 17-AUG-2011 | TIME PLOTTED => 10:53

Dist	COUNTY	ROUTE	POST MILES TOTAL PROJECT	SHEET No.	TOTAL SHEETS
02	Sis	5	R50.9/R58.2	141	329

REGISTERED CIVIL ENGINEER 06-14-11 DATE

06-15-11
PLANS APPROVAL DATE

REGISTERED PROFESSIONAL ENGINEER TOBY J. CRAWFORD No. C71138 Exp. 6-30-13 CIVIL STATE OF CALIFORNIA

THE STATE OF CALIFORNIA OR ITS OFFICERS OR AGENTS SHALL NOT BE RESPONSIBLE FOR THE ACCURACY OR COMPLETENESS OF SCANNED COPIES OF THIS PLAN SHEET.

NOTES:

1. FOR DETAILS NOT SHOWN, INCLUDING MEDIAN BARRIER REINFORCEMENT, REFER TO STANDARD PLANS.
2. CONTRACTOR SHALL FIELD VERIFY HEIGHT PRIOR TO ADJUSTING INLET.
3. PRIOR TO ADJUSTING INLET, REMOVE 7′ SECTION OF MEDIAN BARRIER. AFTER ADJUSTING INLET, RECONSTRUCT MEDIAN BARRIER.

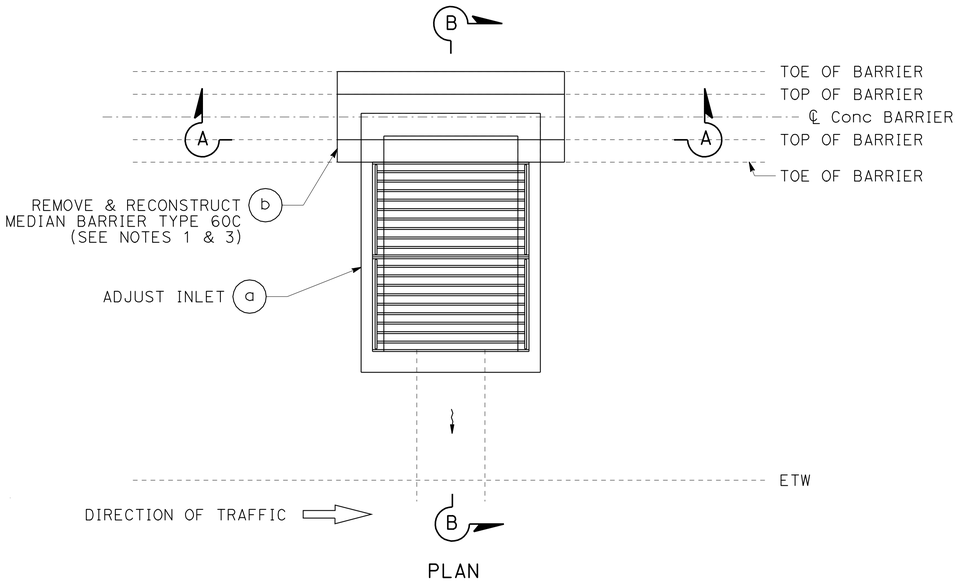

PLAN

ADJUST DRAINAGE INLETS IN MEDIAN (TYPE GDO)

RAISE GRATE ELEVATION

ADJUST DRAINAGE INLETS (TYPE GDO)

RAISE GRATE ELEVATION

DRAINAGE SYSTEM No.	STATION	DIRECTION	Exist GRATE ELEVATION	FINISHED GRATE ELEVATION	ADJUSTED HEIGHT
12	"A1" 573+11	NB	3003.28′	3003.83′	0.55′
13	"A1" 580+00	NB	3037.29′	3037.80′	0.51′
14	"A1" 599+60	SB	3060.40′	3060.56′	0.16′
15	"A1" 605+75	SB	3036.73′	3037.05′	0.32′
18	"A1" 630+25	NB	2898.54′	2899.12′	0.58′
19	"A1" 637+05	NB	2873.90′	2874.34′	0.44′
20	"A1" 644+50	NB	2846.58′	2846.95′	0.37′
21	"A1" 652+17	NB	2819.02′	2819.29′	0.27′
23	"A1" 671+00	SB	2752.67′	2752.88′	0.21′
25	"A1" 686+00	SB	2707.39′	2707.77′	0.38′
26	"A1" 690+92	SB	2692.89′	2693.04′	0.15′

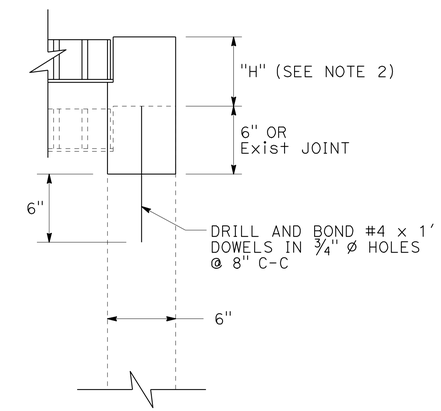

DETAIL A

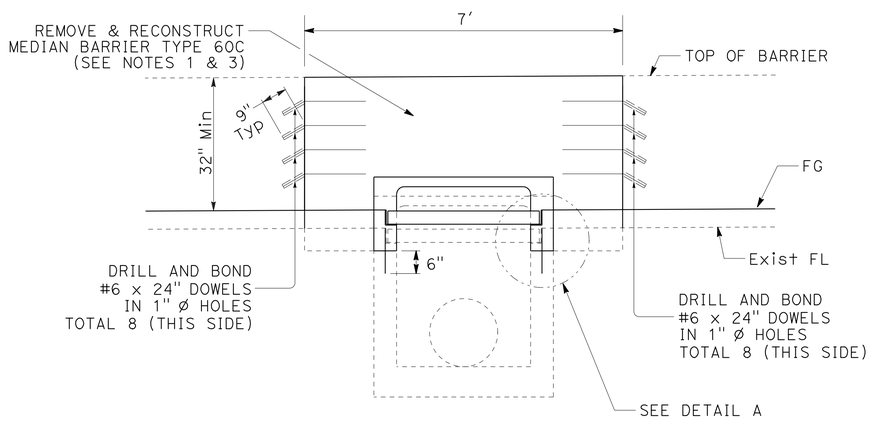

SECTION A-A

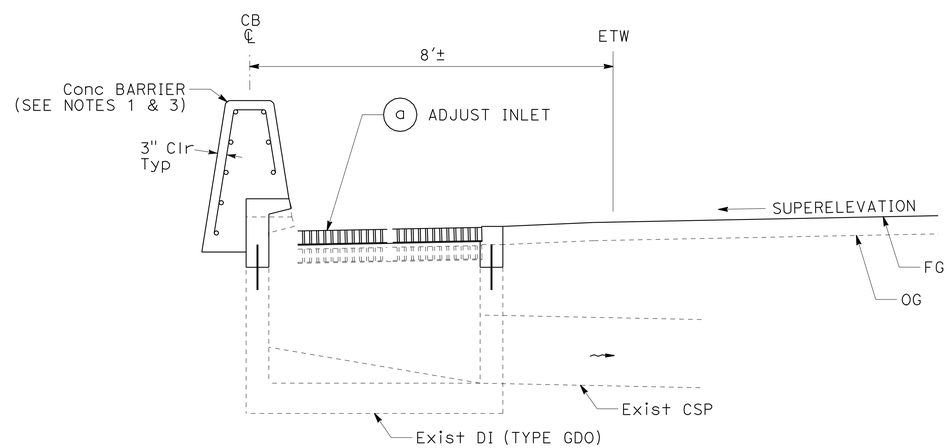

SECTION B-B

DRAINAGE DETAILS

NO SCALE

DD-1

REVISED BY | DATE REVISED
NICOLE MALLORY | TOBY CRAWFORD
CALCULATED-DESIGNED BY | CHECKED BY
FUNCTIONAL SUPERVISOR: STEVE TOPAL

STATE OF CALIFORNIA - DEPARTMENT OF TRANSPORTATION
Caltrans® DESIGN

P:\proj1\02\3E760_plans\pse\23e760ic001.dgn

LAST REVISION 06-14-11 | DATE PLOTTED => 17-AUG-2011 | TIME PLOTTED => 10:53

Dist	COUNTY	ROUTE	POST MILES TOTAL PROJECT	SHEET No.	TOTAL SHEETS
02	Sis	5	R50.9/R58.2	142	329

REGISTERED CIVIL ENGINEER 06-14-11 DATE

06-15-11
PLANS APPROVAL DATE

REGISTERED PROFESSIONAL ENGINEER TOBY J. CRAWFORD No. C71138 Exp. 6-30-13 CIVIL STATE OF CALIFORNIA

THE STATE OF CALIFORNIA OR ITS OFFICERS OR AGENTS SHALL NOT BE RESPONSIBLE FOR THE ACCURACY OR COMPLETENESS OF SCANNED COPIES OF THIS PLAN SHEET.

NOTES:

1. FOR DETAILS NOT SHOWN, INCLUDING MEDIAN BARRIER REINFORCEMENT, REFER TO STANDARD PLANS.
2. CONTRACTOR SHALL FIELD VERIFY HEIGHT PRIOR TO ADJUSTING INLET.
3. PRIOR TO ADJUSTING INLET, REMOVE 7′ SECTION OF MEDIAN BARRIER. AFTER ADJUSTING INLET, RECONSTRUCT MEDIAN BARRIER.
4. DO NOT DRILL AND BOND DOWELS DIRECTLY ABOVE PIPE OPENINGS.

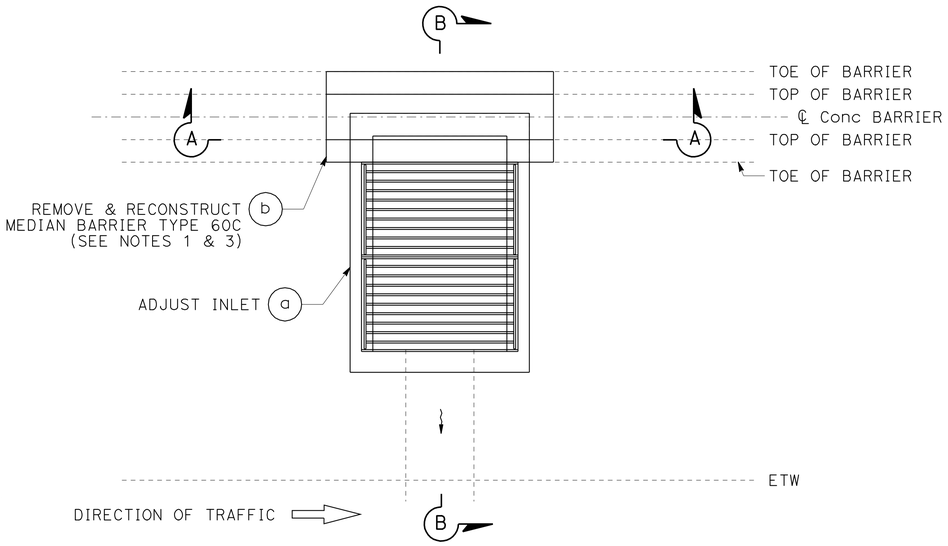

PLAN

ADJUST DRAINAGE INLETS (TYPE GDO)

LOWER GRATE ELEVATION

DRAINAGE SYSTEM No.	STATION	DIRECTION	Exist GRATE ELEVATION	FINISHED GRATE ELEVATION	ADJUSTED HEIGHT
24	"A1" 678+53	SB	2730.23′	2730.03′	0.20′

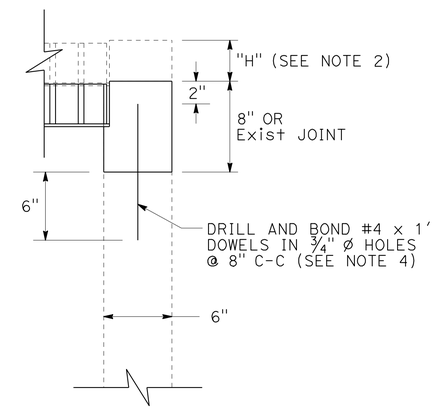

DETAIL A

ADJUST DRAINAGE INLETS IN MEDIAN (TYPE GDO)

LOWER GRATE ELEVATION

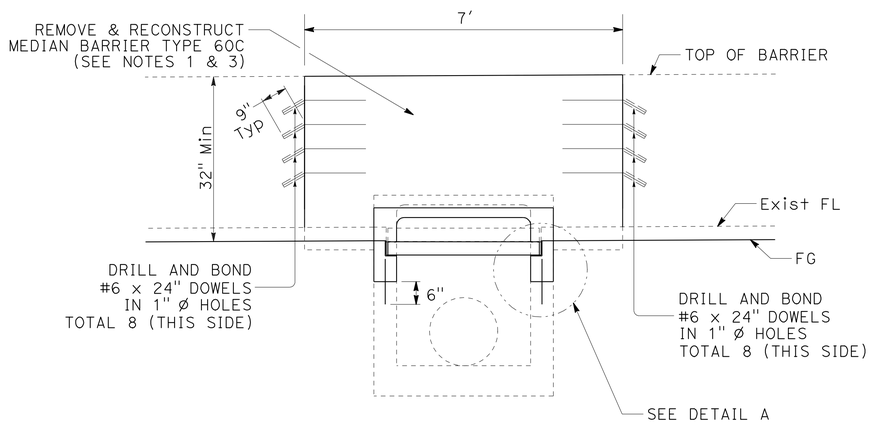

SECTION A-A

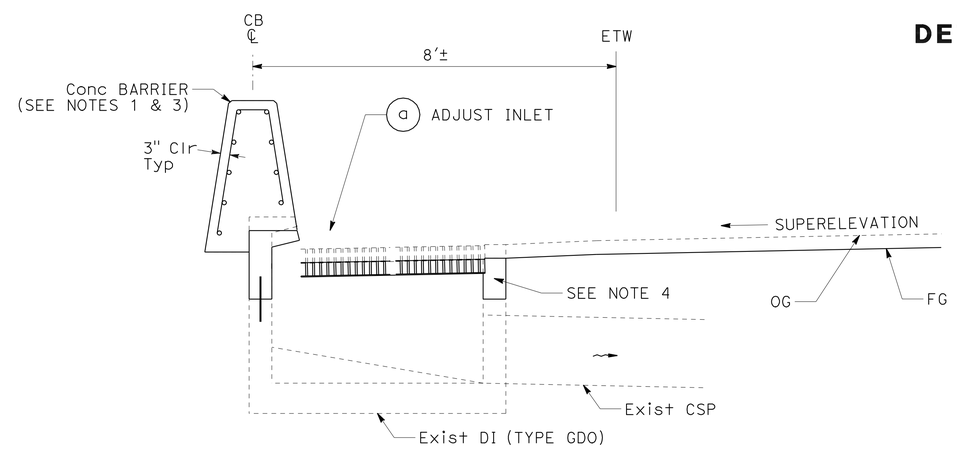

SECTION B-B

DRAINAGE DETAILS

NO SCALE

DD-2

REVISED BY	DATE REVISED
NICOLE MALLORY	TOBY CRAWFORD
CALCULATED-DESIGNED BY	CHECKED BY
FUNCTIONAL SUPERVISOR	STEVE TOPAL

STATE OF CALIFORNIA - DEPARTMENT OF TRANSPORTATION **DESIGN**

Caltrans

P:\proj1\02\3E760_plans\pse\23e760ic002.dgn

LAST REVISION 06-14-11 | DATE PLOTTED => 17-AUG-2011 | TIME PLOTTED => 10:53

Dist	COUNTY	ROUTE	POST MILES TOTAL PROJECT	SHEET No.	TOTAL SHEETS
02	Sis	5	R50.9/R58.2	143	329

REGISTERED CIVIL ENGINEER 06-14-11 DATE

06-15-11
PLANS APPROVAL DATE

REGISTERED PROFESSIONAL ENGINEER TOBY J. CRAWFORD No. C71138 Exp. 6-30-13 CIVIL STATE OF CALIFORNIA

THE STATE OF CALIFORNIA OR ITS OFFICERS OR AGENTS SHALL NOT BE RESPONSIBLE FOR THE ACCURACY OR COMPLETENESS OF SCANNED COPIES OF THIS PLAN SHEET.

NOTES:

1. FOR DETAILS NOT SHOWN, REFER TO STANDARD PLANS.
2. CONTRACTOR SHALL FIELD VERIFY HEIGHT PRIOR TO ADJUSTING INLETS.

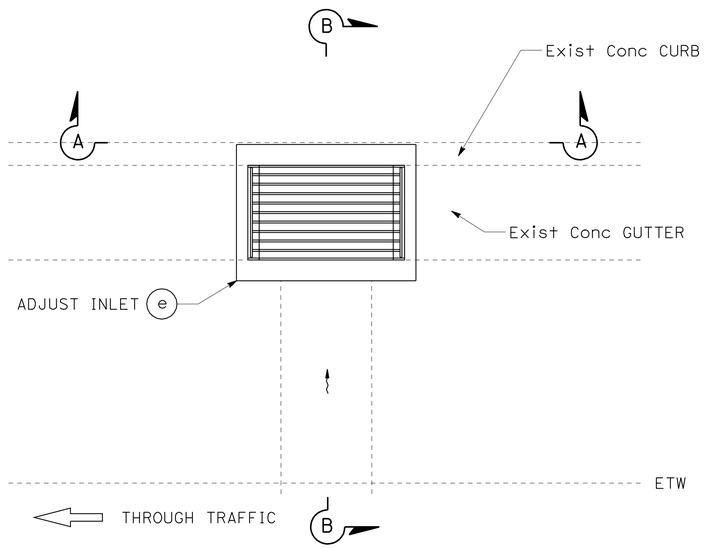

PLAN

ADJUST DRAINAGE INLET (TYPE G1)

"A1" 491+11 IN GORE AREA

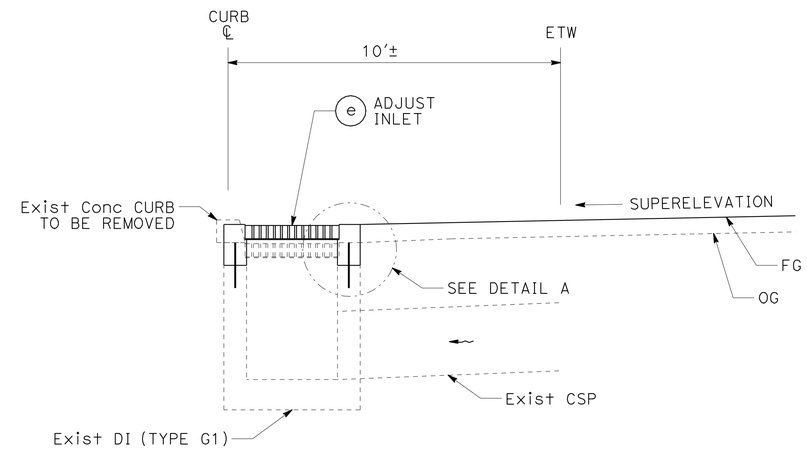

SECTION B-B

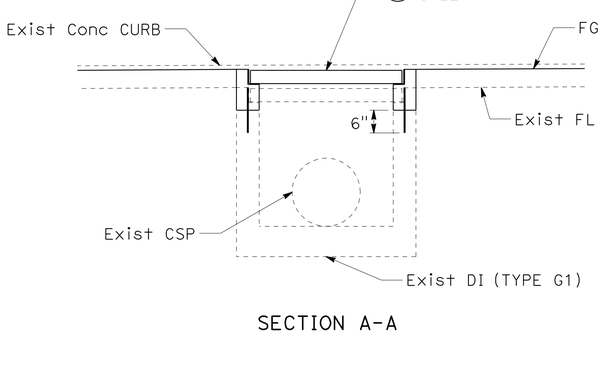

SECTION A-A

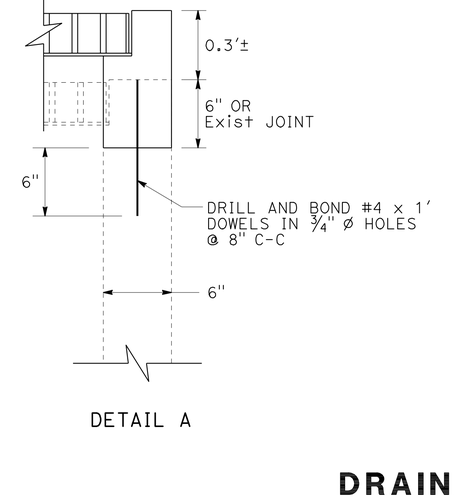

DETAIL A

DRAINAGE SYSTEM No. 2

DRAINAGE DETAILS

NO SCALE **DD-3**

REVISED BY	DATE REVISED
GINNY SEIBERT	TOBY CRAWFORD
CALCULATED-DESIGNED BY	CHECKED BY
FUNCTIONAL SUPERVISOR	STEVE TOPAL

STATE OF CALIFORNIA - DEPARTMENT OF TRANSPORTATION **DESIGN**

Caltrans

P:\proj1\02\3E760_plans\pse\23e760ic003.dgn

LAST REVISION 06-14-11 | DATE PLOTTED => 17-AUG-2011 TIME PLOTTED => 10:53

Dist	COUNTY	ROUTE	POST MILES TOTAL PROJECT	SHEET No.	TOTAL SHEETS
02	Sis	5	R50.9/R58.2	144	329

REGISTERED CIVIL ENGINEER 06-14-11 DATE

06-15-11
PLANS APPROVAL DATE

REGISTERED PROFESSIONAL ENGINEER TOBY J. CRAWFORD No. C71138 Exp. 6-30-13 CIVIL STATE OF CALIFORNIA

THE STATE OF CALIFORNIA OR ITS OFFICERS OR AGENTS SHALL NOT BE RESPONSIBLE FOR THE ACCURACY OR COMPLETENESS OF SCANNED COPIES OF THIS PLAN SHEET.

NOTES:

1. FOR DETAILS NOT SHOWN, REFER TO STANDARD PLANS.
2. DIMENSION IS APPROXIMATE, PAVE APRON TO EDGE OF PAVEMENT OR AS DIRECTED BY THE ENGINEER.

HMA APRON LOCATIONS
(SB MEDIAN)

DRAINAGE SYSTEM No. ⬡	Sta
2	491+11
3	500+50
4	512+00
6	524+00
8	538+00
9	547+48
10	553+02

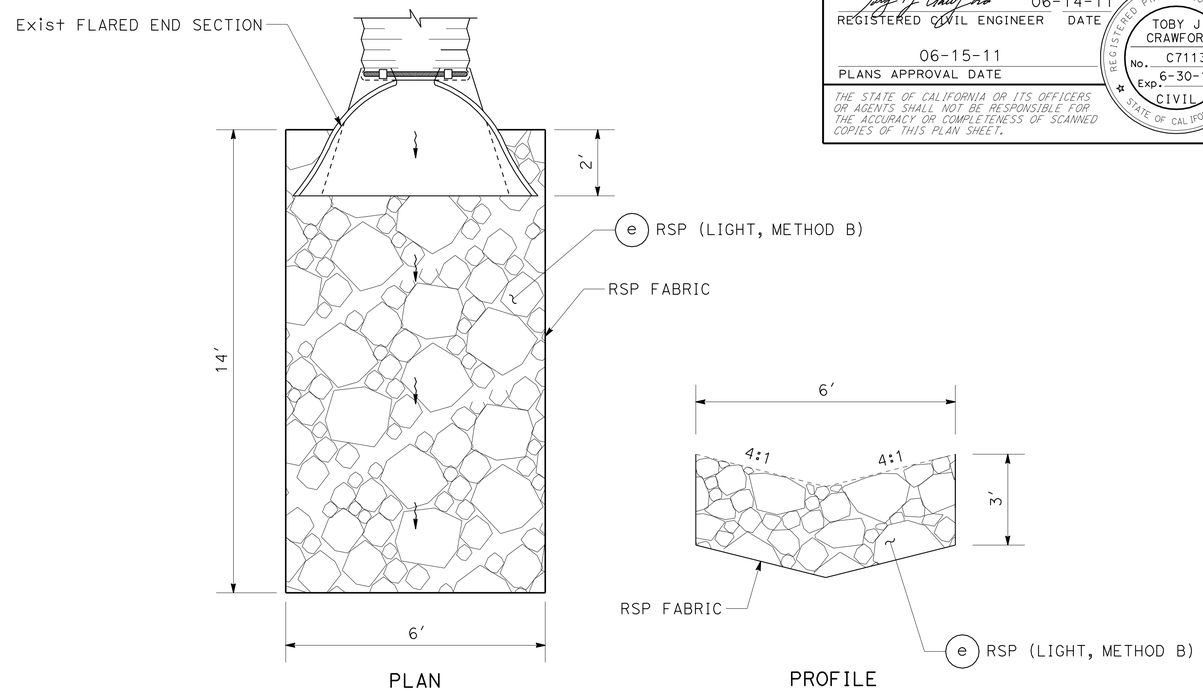

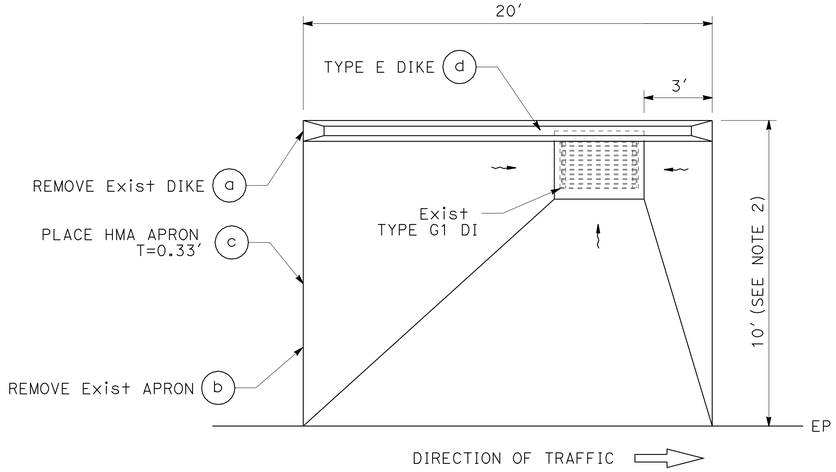

PLAN

HMA APRON RECTANGULAR GRATE INLET (WITHOUT CURB)

DRAINAGE SYSTEM No. ⬡2 ⬡3 ⬡4 ⬡6 ⬡8 ⬡9 ⬡10

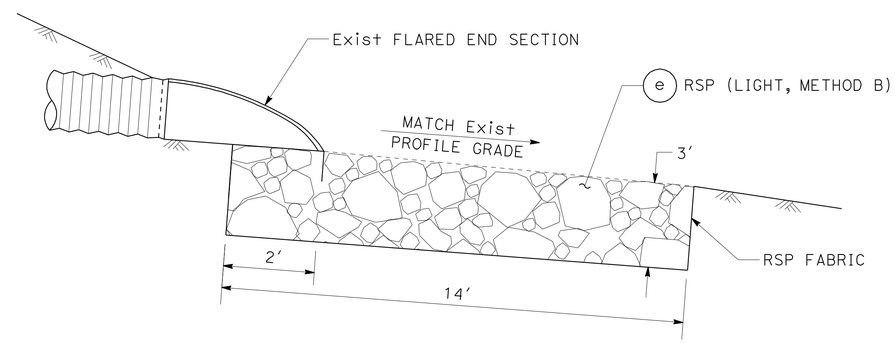

"A1" 500+50 AND "A1" 720+00

ROCK SLOPE PROTECTION (LIGHT, METHOD B)

DRAINAGE SYSTEM No. ⬡3 ⬡28

DRAINAGE DETAILS

NO SCALE

DD-4

REVISED BY	DATE REVISED
NICOLE MALLORY	GINNY SEIBERT
CALCULATED-DESIGNED BY	CHECKED BY
FUNCTIONAL SUPERVISOR	STEVE TOPAL

STATE OF CALIFORNIA - DEPARTMENT OF TRANSPORTATION
Caltrans
DESIGN

P:\proj\02\3E760_plans\pse\23e760ic004.dgn

LAST REVISION 06-14-11 | DATE PLOTTED => 17-AUG-2011 | TIME PLOTTED => 10:53

Dist	COUNTY	ROUTE	POST MILES TOTAL PROJECT	SHEET No.	TOTAL SHEETS
02	Sis	5	R50.9/R58.2	145	329

REGISTERED CIVIL ENGINEER 06-14-11 DATE

06-15-11
PLANS APPROVAL DATE

REGISTERED PROFESSIONAL ENGINEER TOBY J. CRAWFORD No. C71138 Exp. 6-30-13 CIVIL STATE OF CALIFORNIA

THE STATE OF CALIFORNIA OR ITS OFFICERS OR AGENTS SHALL NOT BE RESPONSIBLE FOR THE ACCURACY OR COMPLETENESS OF SCANNED COPIES OF THIS PLAN SHEET.

NOTE:

1. FOR DETAILS NOT SHOWN, REFER TO STANDARD PLANS.

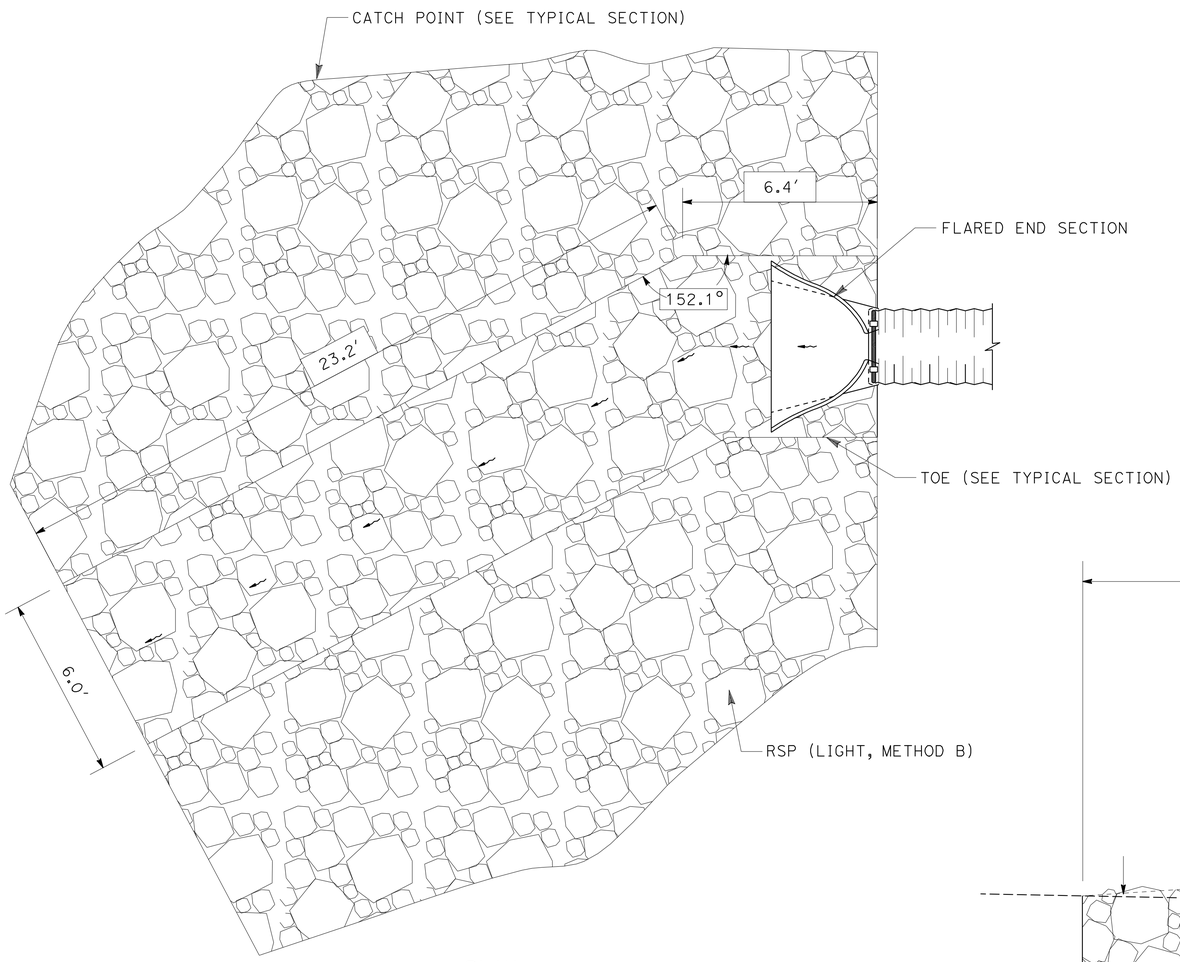

PLAN

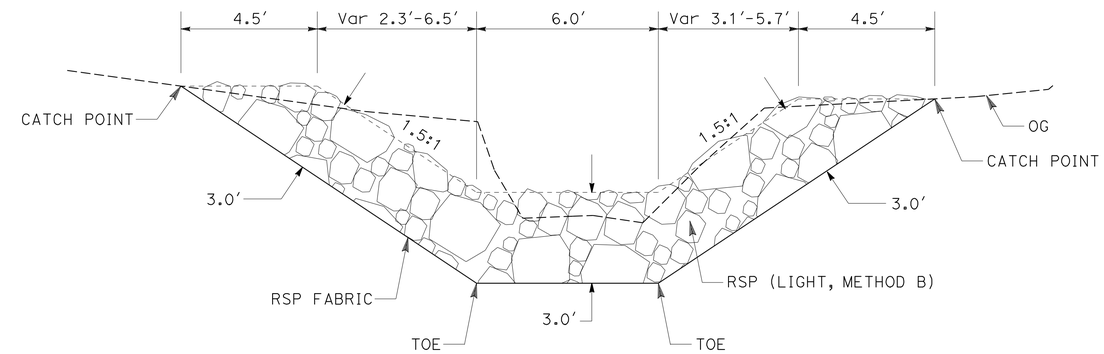

TYPICAL SECTION

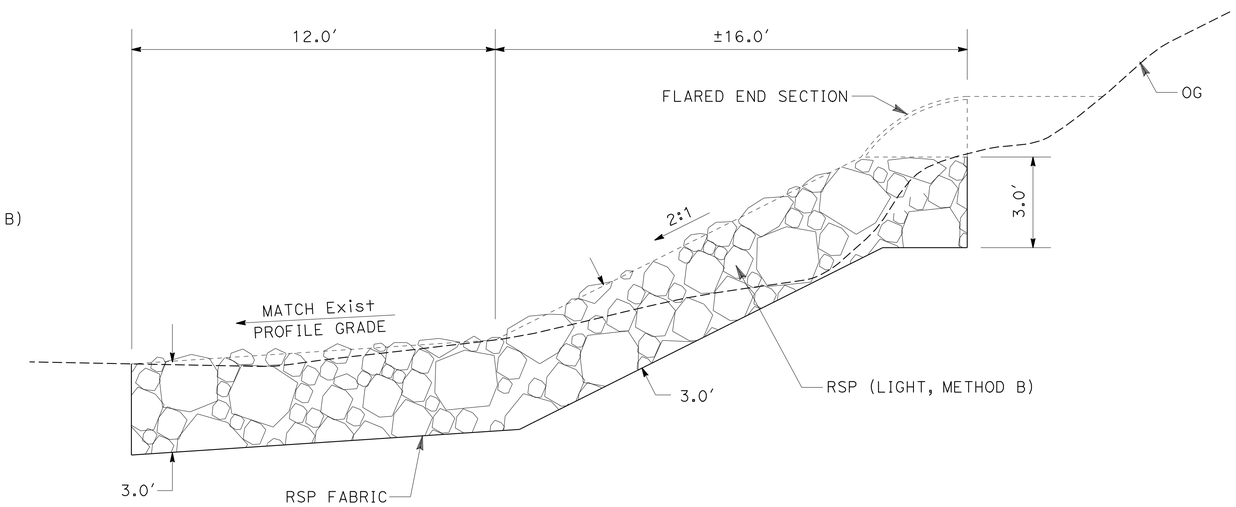

PROFILE

"A1" 568+73

ROCK SLOPE PROTECTION (LIGHT, METHOD B)

DRAINAGE SYSTEM No. 11

DRAINAGE DETAILS

NO SCALE **DD-5**

STATE OF CALIFORNIA - DEPARTMENT OF TRANSPORTATION
Caltrans® **DESIGN**

FUNCTIONAL SUPERVISOR: STEVE TOPAL
CALCULATED-DESIGNED BY: NICOLE MALLORY
CHECKED BY: TOBY CRAWFORD
REVISED BY / DATE REVISED

P:\proj1\02\3E760_plans\pse\23e760ic005.dgn

LAST REVISION OG-14-11 | DATE PLOTTED => 17-AUG-2011 | TIME PLOTTED => 10:53

Dist	COUNTY	ROUTE	POST MILES TOTAL PROJECT	SHEET No.	TOTAL SHEETS
02	Sis	5	R50.9/R58.2	146	329

REGISTERED CIVIL ENGINEER 06-14-11 DATE

06-15-11
PLANS APPROVAL DATE

REGISTERED PROFESSIONAL ENGINEER TOBY J. CRAWFORD No. C71138 Exp. 6-30-13 CIVIL STATE OF CALIFORNIA

THE STATE OF CALIFORNIA OR ITS OFFICERS OR AGENTS SHALL NOT BE RESPONSIBLE FOR THE ACCURACY OR COMPLETENESS OF SCANNED COPIES OF THIS PLAN SHEET.

NOTES:

1. NOT A SEPARATE PAY ITEM, FOR INFORMATION ONLY
2. FOR DETAILS NOT SHOWN, REFER TO STANDARD PLANS.

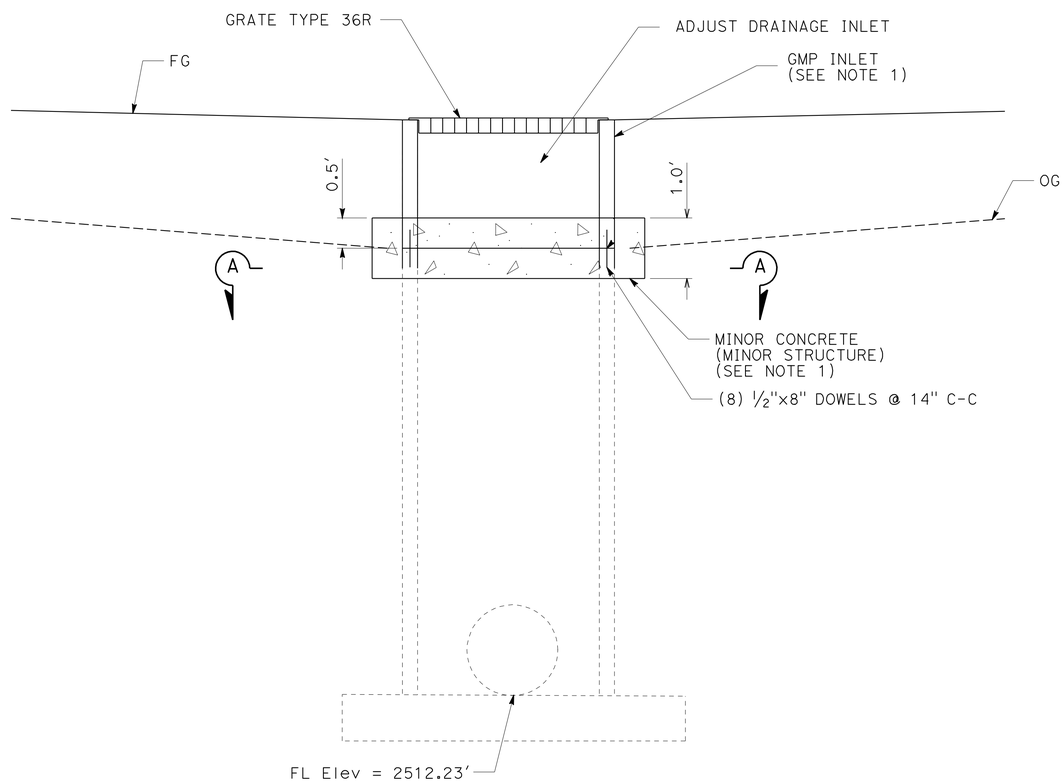

ELEVATION

ADJUST GMP INLET

DRAINAGE SYSTEM No. 1

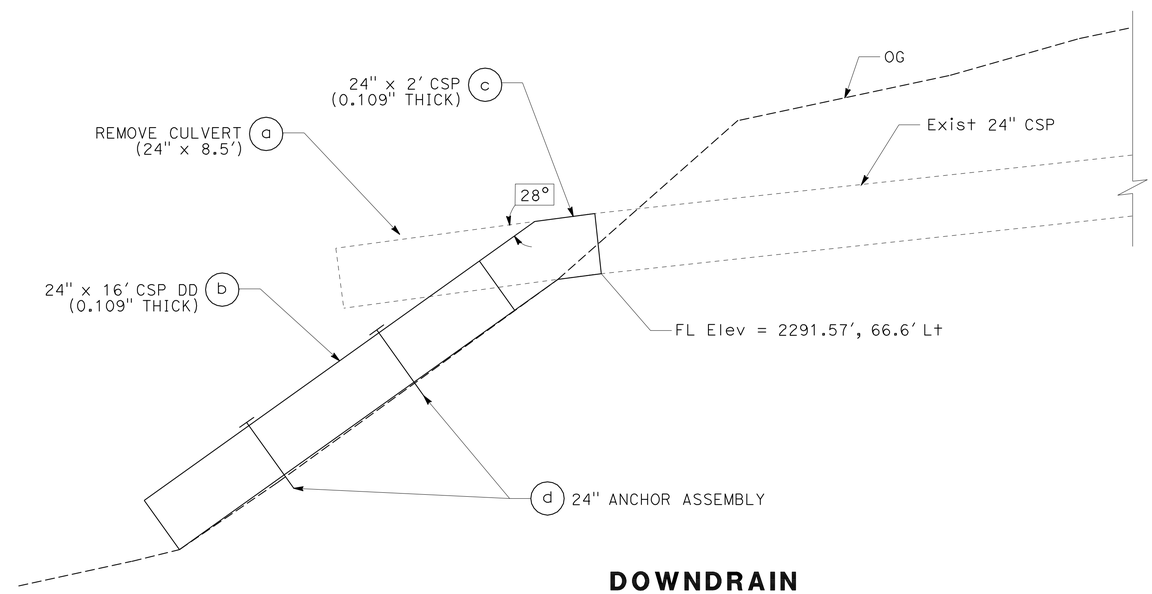

DOWNDRAIN

DRAINAGE SYSTEM No. 38

"A1" 783+01, SB

ADJUST DRAINAGE INLETS (TYPE GMP)

RAISE GRATE ELEVATION

DRAINAGE SYSTEM No.	STATION	Exist GRATE ELEVATION	FINISHED GRATE ELEVATION	ADJUSTED HEIGHT
1	"A1" 448+94	2522.59'	2524.73'	2.14'

DRAINAGE DETAILS

NO SCALE

DD-6

REVISED BY | DATE REVISED
GINNY SEIBERT | TOBY CRAWFORD
CALCULATED-DESIGNED BY | CHECKED BY
FUNCTIONAL SUPERVISOR: STEVE TOPAL

STATE OF CALIFORNIA - DEPARTMENT OF TRANSPORTATION
Caltrans DESIGN

P:\proj1\02\3E760_plans\pse\23e760ic006.dgn

LAST REVISION 06-14-11 | DATE PLOTTED => 17-AUG-2011 | TIME PLOTTED => 10:53

Dist	COUNTY	ROUTE	POST MILES TOTAL PROJECT	SHEET No.	TOTAL SHEETS
02	Sis	5	R50.9/R58.2	147	329

REGISTERED CIVIL ENGINEER 06-14-11 DATE

06-15-11
PLANS APPROVAL DATE

REGISTERED PROFESSIONAL ENGINEER TOBY J. CRAWFORD No. C71138 Exp. 6-30-13 CIVIL STATE OF CALIFORNIA

THE STATE OF CALIFORNIA OR ITS OFFICERS OR AGENTS SHALL NOT BE RESPONSIBLE FOR THE ACCURACY OR COMPLETENESS OF SCANNED COPIES OF THIS PLAN SHEET.

NOTES:

1. FOR DETAILS NOT SHOWN, REFER TO STANDARD PLANS.
2. 2 BOLT-DOWN CLIPS FOR EACH GRATE.
3. USE LENGTH NEEDED TO SECURELY FASTEN THE GRATE TO THE FRAME PER THE MANUFACTURER'S GUIDELINES.
4. GRATE LOCKING DEVICE TO BE USED ON INLETS WITHIN THE VEHICLE WHEEL PATH DURING STAGE CONSTRUCTION.

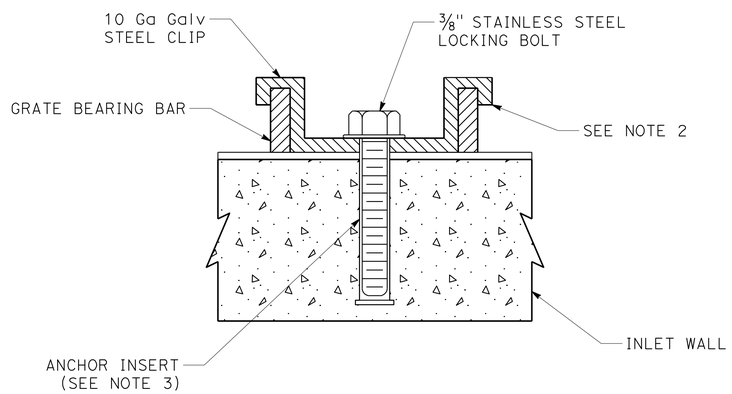

ELEVATION

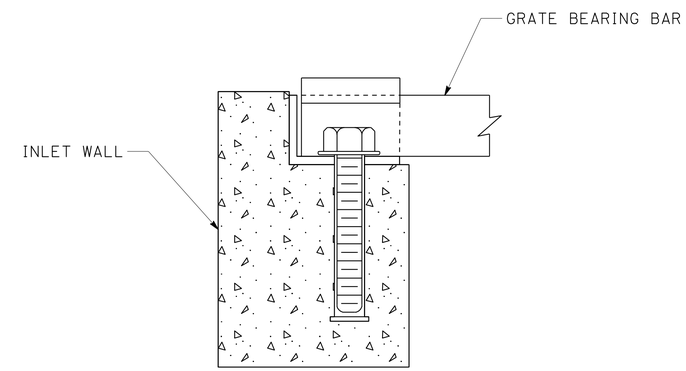

SIDE VIEW

GRATE LOCKING DEVICE

DRAINAGE SYSTEM No. 11 40 41

NOTE: SEE DRAINAGE PLAN AND PROFILES.

DRAINAGE DETAILS

NO SCALE

DD-7

REVISED BY	DATE REVISED
TOBY CRAWFORD	GINNY SEIBERT
CALCULATED-DESIGNED BY	CHECKED BY
FUNCTIONAL SUPERVISOR	STEVE TOPAL

STATE OF CALIFORNIA - DEPARTMENT OF TRANSPORTATION
Caltrans® DESIGN

P:\proj1\02\3E760_plans\pse\23e760ic007.dgn

LAST REVISION 06-14-11 DATE PLOTTED => 17-AUG-2011 TIME PLOTTED => 10:54

Dist	COUNTY	ROUTE	POST MILES TOTAL PROJECT	SHEET No.	TOTAL SHEETS
02	Sis	5	R50.9/R58.2	148	329

REGISTERED CIVIL ENGINEER 06-14-11 DATE

06-15-11
PLANS APPROVAL DATE

REGISTERED PROFESSIONAL ENGINEER TOBY J. CRAWFORD No. C71138 Exp. 6-30-13 CIVIL STATE OF CALIFORNIA

THE STATE OF CALIFORNIA OR ITS OFFICERS OR AGENTS SHALL NOT BE RESPONSIBLE FOR THE ACCURACY OR COMPLETENESS OF SCANNED COPIES OF THIS PLAN SHEET.

NOTES:

1. FOR DETAILS NOT SHOWN, REFER TO STANDARD PLANS.
2. SEE DRAINAGE QUANTITY SHEET FOR DI HEIGHTS.

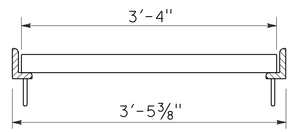

SECTION B-B

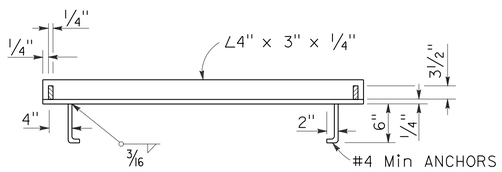

SECTION A-A

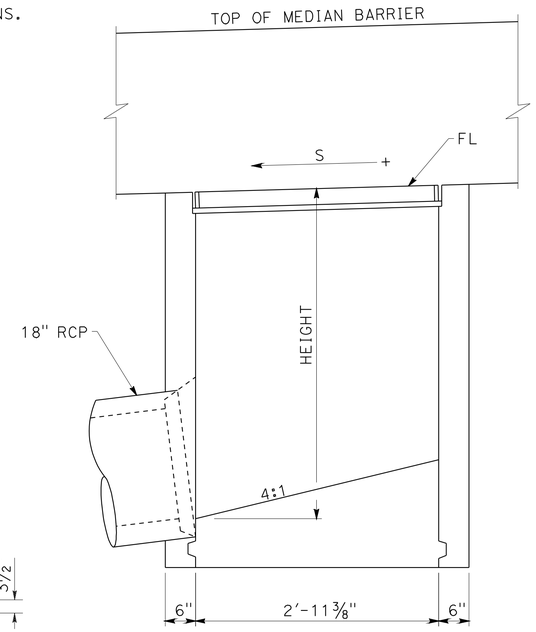

SECTION A-A

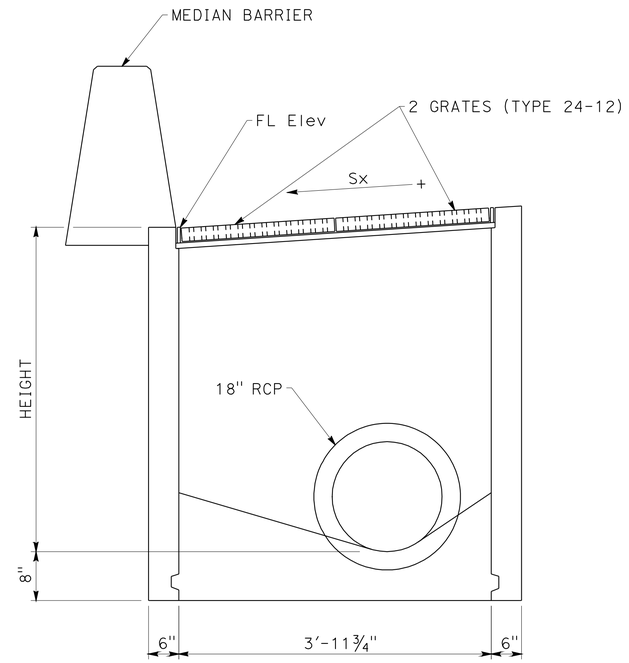

SECTION B-B

ADJUST DRAINAGE INLETS (TYPE G1 Mod)

DURING STAGE 4A

DRAINAGE SYSTEM No.	STATION	CROSSOVER	Exist GRATE ELEVATION	FINISHED GRATE ELEVATION	ADJUSTED HEIGHT "H"
11	"A1" 567+77	3	2997.59'	2997.41'	-0.18'
11	"A1" 568+25	3	2997.62'	2997.34'	-0.28'
11	"A1" 570+65	3	2998.79'	2998.96'	+0.17'
41	"A1" 807+25	5	2157.13'	2156.97'	-0.16'
41	"A1" 812+05	3	2128.23'	2128.75'	+0.52'

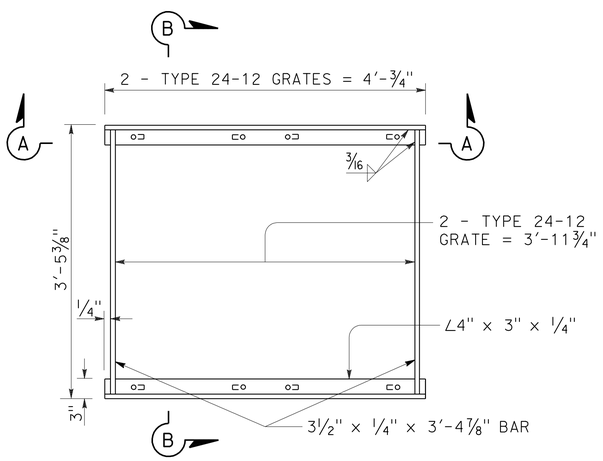

PLAN

DOUBLE GRATE FRAME DETAILS

FOR TYPE G1 (MODIFIED) DI

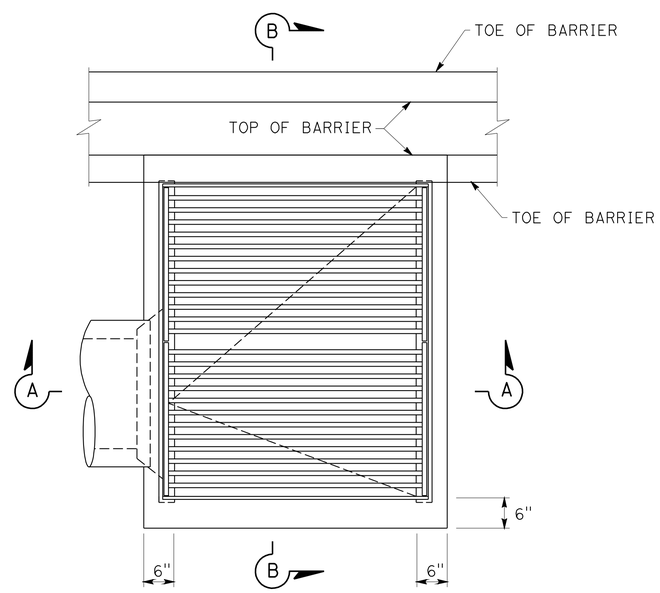

PLAN

TYPE G1 (MODIFIED) DI

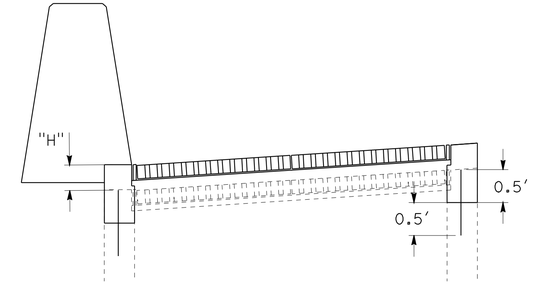

TYPE G1 (MODIFIED) DI

RAISE GRATE ELEVATION

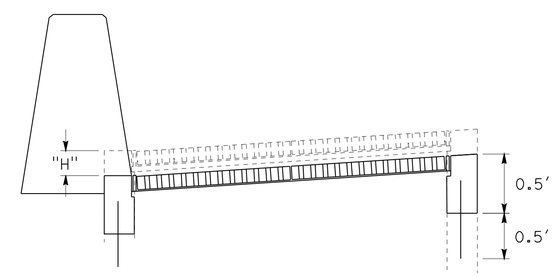

TYPE G1 (MODIFIED) DI

LOWER GRATE ELEVATION

DRAINAGE DETAILS

NO SCALE

DD-8

REVISED BY | DATE REVISED
TOBY CRAWFORD | GINNY SEIBERT
CALCULATED-DESIGNED BY | CHECKED BY
FUNCTIONAL SUPERVISOR: STEVE TOPAL

STATE OF CALIFORNIA - DEPARTMENT OF TRANSPORTATION
Caltrans DESIGN

P:\proj1\02\3E760_plans\pse\23e760ic008.dgn

LAST REVISION 06-14-11 | DATE PLOTTED => 17-AUG-2011 | TIME PLOTTED => 10:54

Dist	COUNTY	ROUTE	POST MILES TOTAL PROJECT	SHEET No.	TOTAL SHEETS
02	Sis	5	R50.9/R58.2	149	329

REGISTERED CIVIL ENGINEER 06-14-11 DATE

06-15-11
PLANS APPROVAL DATE

REGISTERED PROFESSIONAL ENGINEER TOBY J. CRAWFORD No. C71138 Exp. 6-30-13 CIVIL STATE OF CALIFORNIA

THE STATE OF CALIFORNIA OR ITS OFFICERS OR AGENTS SHALL NOT BE RESPONSIBLE FOR THE ACCURACY OR COMPLETENESS OF SCANNED COPIES OF THIS PLAN SHEET.

NOTES:

1. FOR DETAILS NOT SHOWN, REFER TO STANDARD PLANS.
2. SEE DRAINAGE QUANTITY SHEET FOR DI HEIGHTS.
3. DIMENSIONS OF SECTION A-A TO MATCH TYPE GT4 INLET (SEE Std PLAN D74A).

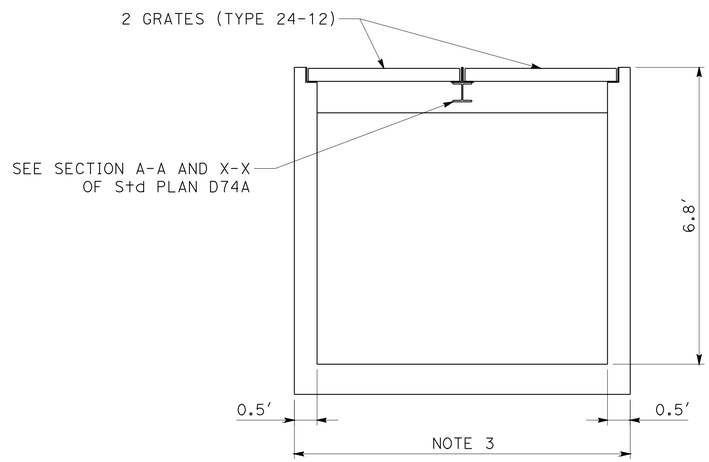

SECTION A-A

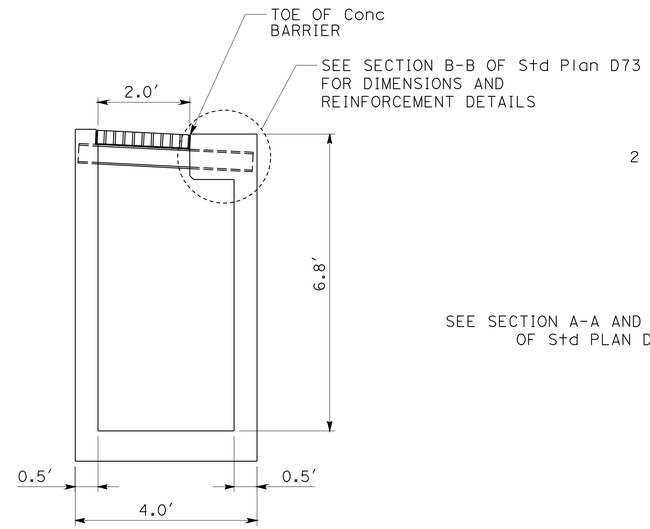

SECTION B-B

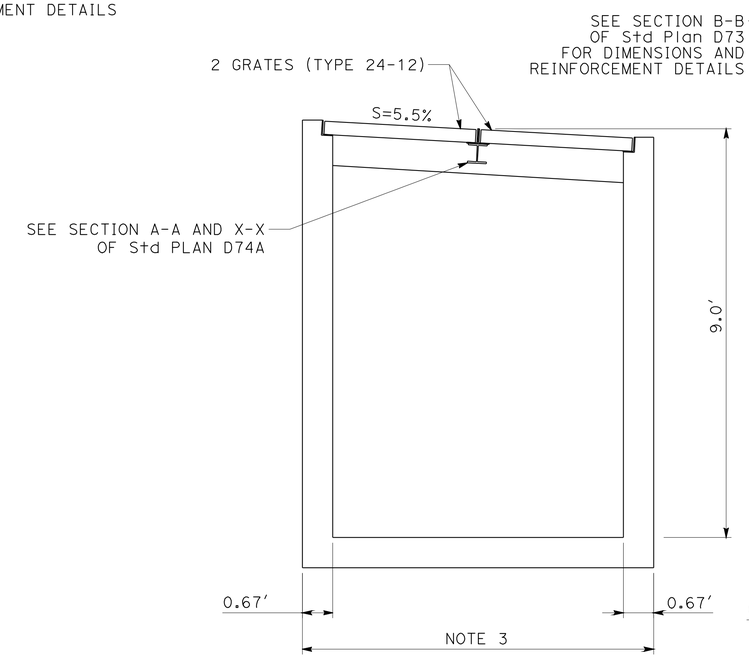

SECTION A-A

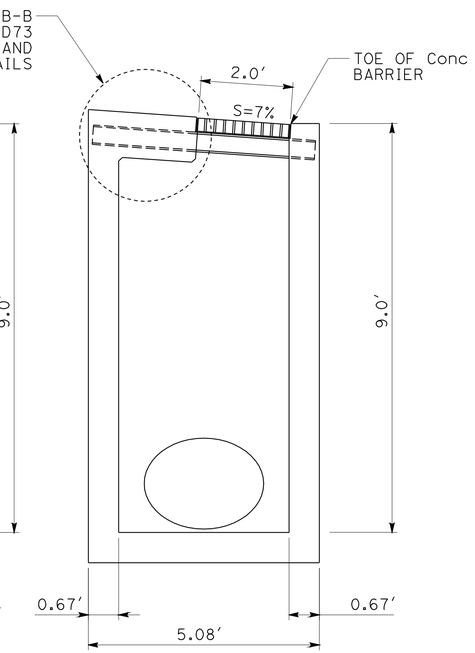

SECTION B-B

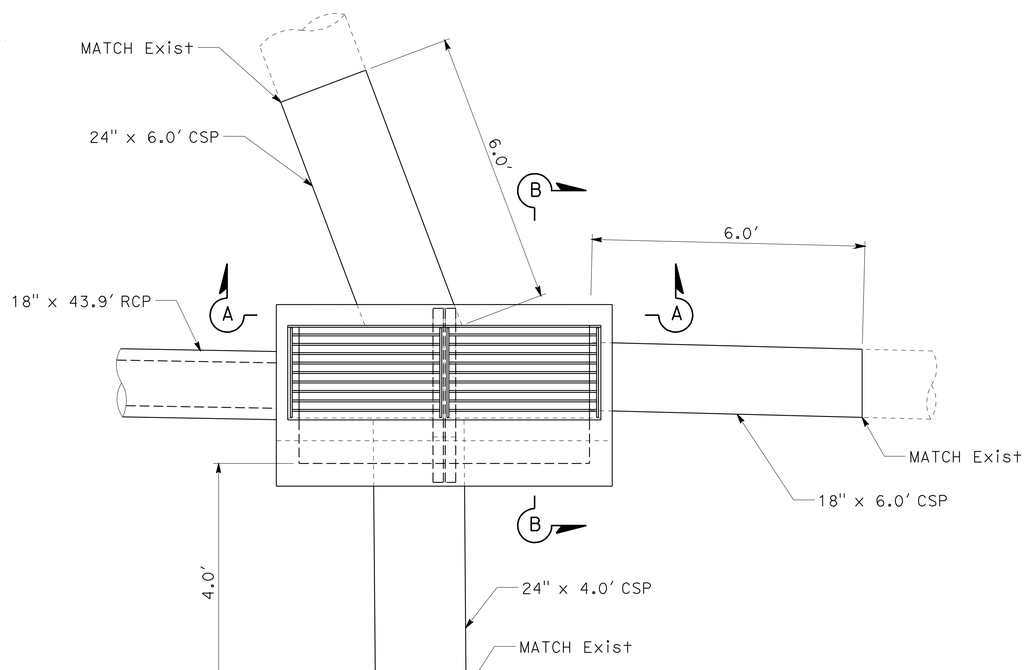

PLAN

DRAINAGE SYSTEM No. 11
"A1" 568+73

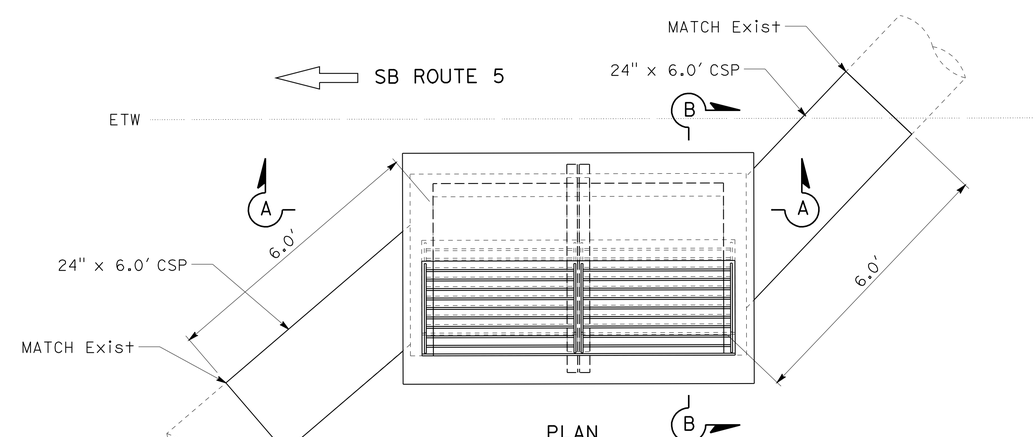

PLAN

DRAINAGE SYSTEM No. 29
"A1" 724+02

TYPE G2 (MODIFIED) DI

DRAINAGE DETAILS
NO SCALE
DD-9

REVISED BY	DATE REVISED
TOBY CRAWFORD	GINNY SEIBERT

CALCULATED-DESIGNED BY / CHECKED BY

FUNCTIONAL SUPERVISOR: STEVE TOPAL

STATE OF CALIFORNIA - DEPARTMENT OF TRANSPORTATION
Caltrans® DESIGN

P:\proj1\02\3E760_plans\pse\23e760ic009.dgn

LAST REVISION 06-14-11 | DATE PLOTTED => 17-AUG-2011 | TIME PLOTTED => 10:54

Dist	COUNTY	ROUTE	POST MILES TOTAL PROJECT	SHEET No.	TOTAL SHEETS
02	Sis	5	R50.9/R58.2	150	329

REGISTERED CIVIL ENGINEER 06-14-11 DATE

06-15-11
PLANS APPROVAL DATE

REGISTERED PROFESSIONAL ENGINEER TOBY J. CRAWFORD No. C71138 Exp. 6-30-13 CIVIL STATE OF CALIFORNIA

THE STATE OF CALIFORNIA OR ITS OFFICERS OR AGENTS SHALL NOT BE RESPONSIBLE FOR THE ACCURACY OR COMPLETENESS OF SCANNED COPIES OF THIS PLAN SHEET.

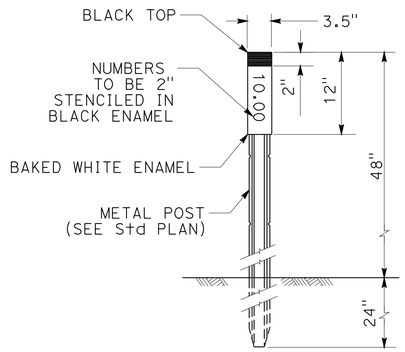

MARKER (CULVERT)

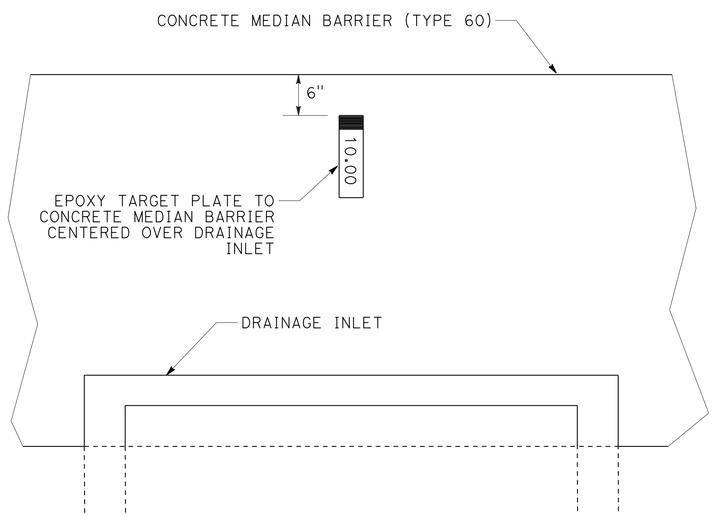

PLAN

CULVERT MARKER (BARRIER MOUNTED)

CULVERT MARKER (BARRIER MOUNTED)

DRAINAGE SYSTEM No.	Sta	Dir	POST MILE
11	567+77	SB	53.31
	568+25	SB	53.32
	568+73	SB	53.33
	570+65	NB	53.36
	570+80	NB	53.37
12	573+11	NB	53.41
13	580+00	NB	53.54
14	599+60	SB	53.91
15	605+75	SB	54.03
16	614+75	SB	54.20
17	615+60	SB	54.22
	615+80	SB	54.22
	621+50	NB	54.33
18	630+25	NB	54.49
19	637+05	NB	54.62
20	644+50	NB	54.76
21	652+17	NB	54.91
22	654+00	NB	54.94
	654+30	NB	54.95
23	671+00	SB	55.27
24	678+53	SB	55.41
25	686+00	SB	55.55
26	690+92	SB	55.64
27	692+20	SB	55.67
	692+50	SB	55.67
28	720+00	SB	56.19
29	724+02	SB	56.27
30	730+50	SB	56.39
	730+65	SB	56.39
	734+60	SB	56.47
	734+60	NB	56.47
31	743+49	NB	56.64
32	748+62	NB	56.74
	749+00	NB	56.74
33	755+20	SB	56.86
34	762+50	SB	57.00
35	767+50	SB	57.09
36	773+00	SB	57.20
37	774+15	SB	57.22
38	782+99	NB	57.39
	783+01	NB	57.39
39	793+13	NB	57.58
40	802+50	NB	57.76
41	807+60	NB	57.85
	808+00	NB	57.86
	812+05	NB	57.94

DRAINAGE DETAILS

NO SCALE

DD-10

STATE OF CALIFORNIA - DEPARTMENT OF TRANSPORTATION
Caltrans® DESIGN

FUNCTIONAL SUPERVISOR: STEVE TOPAL
CALCULATED-DESIGNED BY: WILL LESLIE
CHECKED BY: TOBY CRAWFORD
REVISED BY / DATE REVISED

P:\proj1\02\3E760_plans\pse\23e760ic010.dgn

LAST REVISION OG-14-11 | DATE PLOTTED => 17-AUG-2011 | TIME PLOTTED => 10:54

Dist	COUNTY	ROUTE	POST MILES TOTAL PROJECT	SHEET No.	TOTAL SHEETS
02	Sis	5	R50.9/R58.2	151	329

REGISTERED CIVIL ENGINEER 06-14-11 DATE

06-15-11
PLANS APPROVAL DATE

REGISTERED PROFESSIONAL ENGINEER TOBY J. CRAWFORD No. C71138 Exp. 6-30-13 CIVIL STATE OF CALIFORNIA

THE STATE OF CALIFORNIA OR ITS OFFICERS OR AGENTS SHALL NOT BE RESPONSIBLE FOR THE ACCURACY OR COMPLETENESS OF SCANNED COPIES OF THIS PLAN SHEET.

LEGEND

EMBANKMENT

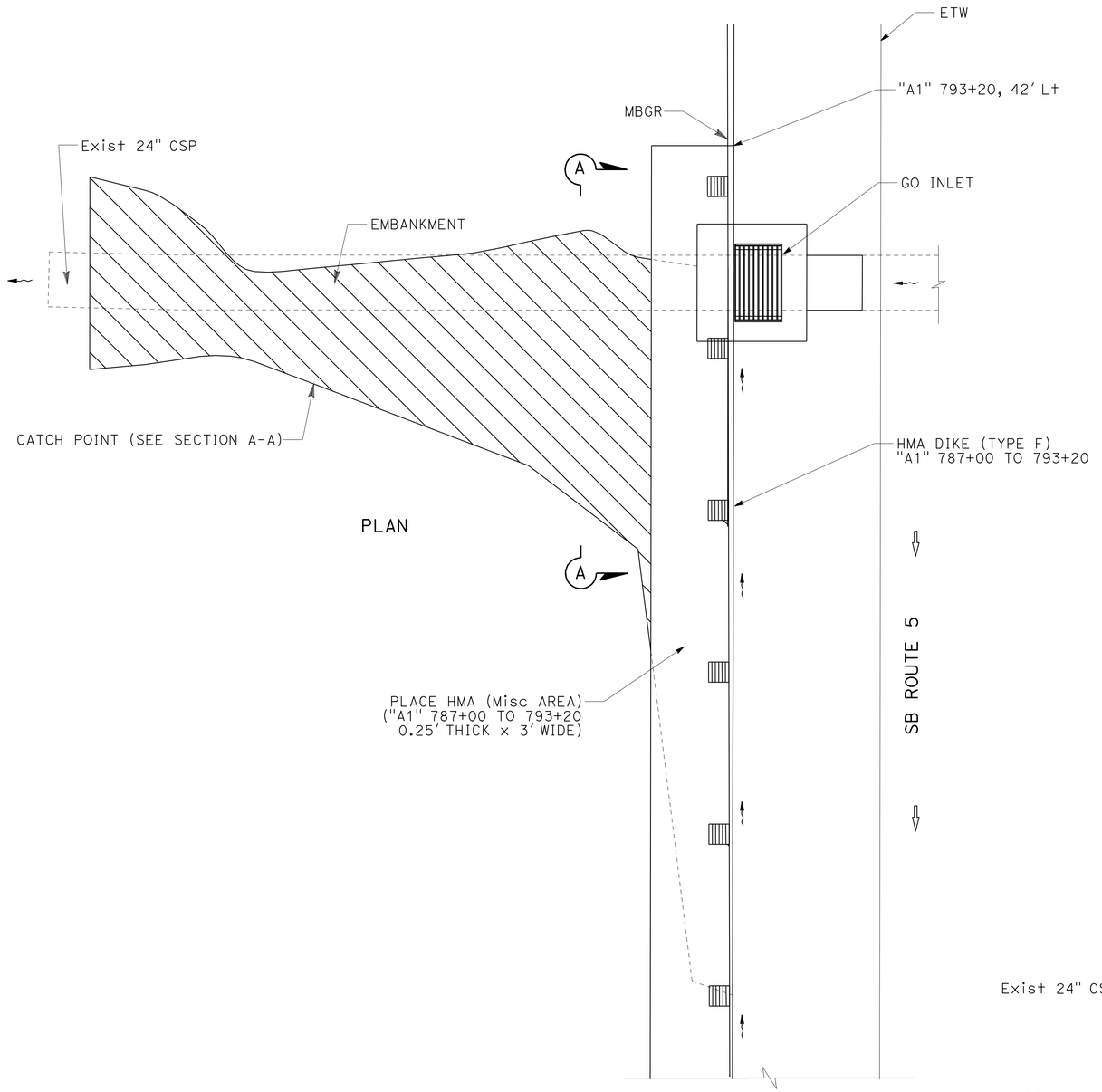

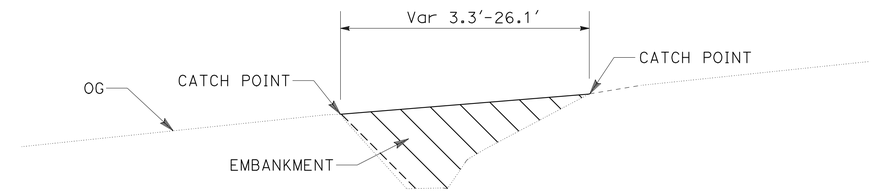

SECTION A-A

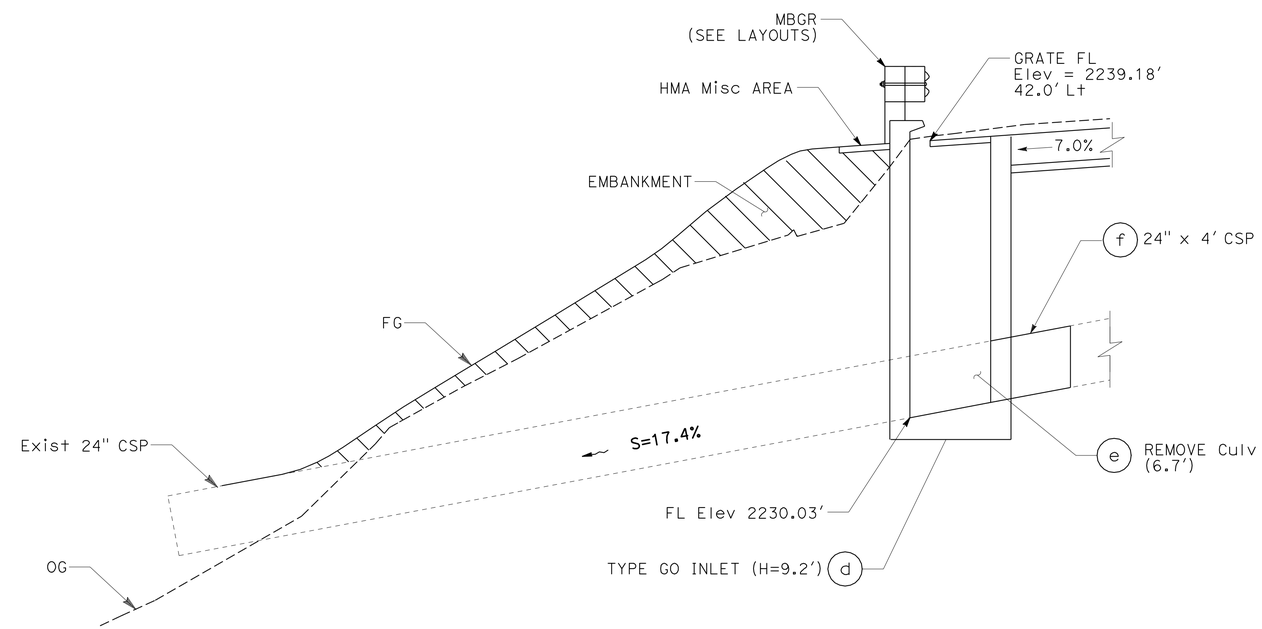

PROFILE

"A1" 793+15, SB SHOULDER

RE-GRADE ERODED SLOPE

DRAINAGE SYSTEM No. 39

DRAINAGE DETAILS

NO SCALE **DD-11**

REVISED BY	DATE REVISED
TOBY CRAWFORD	GINNY SEIBERT

CALCULATED-DESIGNED BY / CHECKED BY

FUNCTIONAL SUPERVISOR: STEVE TOPAL

STATE OF CALIFORNIA - DEPARTMENT OF TRANSPORTATION

Caltrans DESIGN

P:\proj1\02\3E760_plans\pse\23e760ic011.dgn

LAST REVISION 06-14-11 | DATE PLOTTED => 17-AUG-2011 | TIME PLOTTED => 10:54

Dist	COUNTY	ROUTE	POST MILES TOTAL PROJECT	SHEET No.	TOTAL SHEETS
02	Sis	5	R50.9/R58.2	152	329

REGISTERED CIVIL ENGINEER 06-14-11 DATE

06-15-11
PLANS APPROVAL DATE

REGISTERED PROFESSIONAL ENGINEER TOBY J. CRAWFORD No. C71138 Exp. 6-30-13 CIVIL STATE OF CALIFORNIA

THE STATE OF CALIFORNIA OR ITS OFFICERS OR AGENTS SHALL NOT BE RESPONSIBLE FOR THE ACCURACY OR COMPLETENESS OF SCANNED COPIES OF THIS PLAN SHEET.

NOTES:

1. SEE STANDARD PLAN D98C FOR DETAILS NOT SHOWN.
2. PLACE ISOLATION JOINT BETWEEN PCC PAVEMENT AND CONCRETE BACKFILL.
3. GRATED LINE DRAIN FOR DRAINAGE SYSTEM 11 TO BE INSTALLED DURING STAGE 4A.

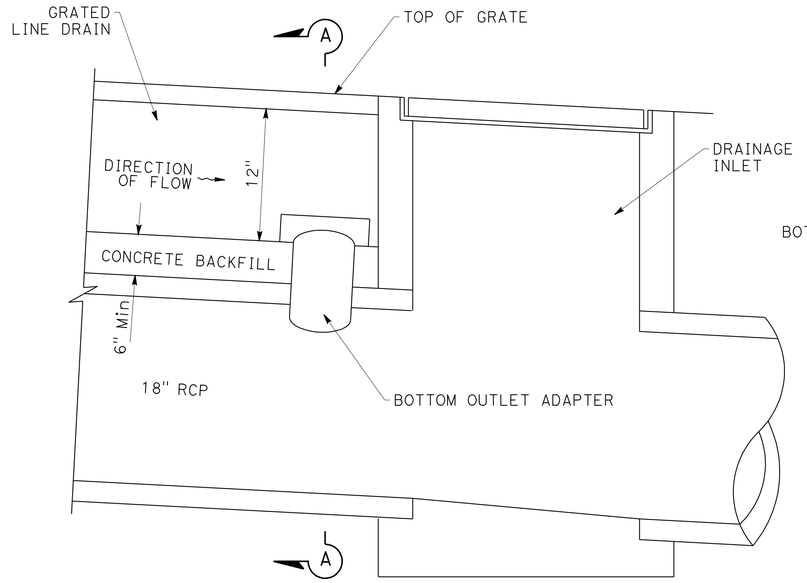

SECTION B-B

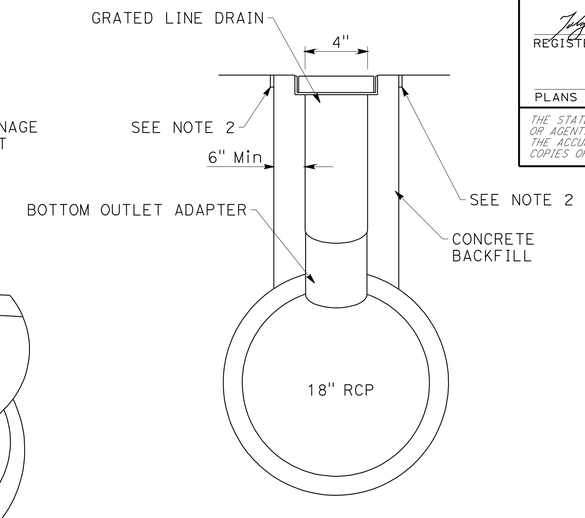

SECTION A-A

DRAINAGE SYSTEM No. 41
"A1" 808+00

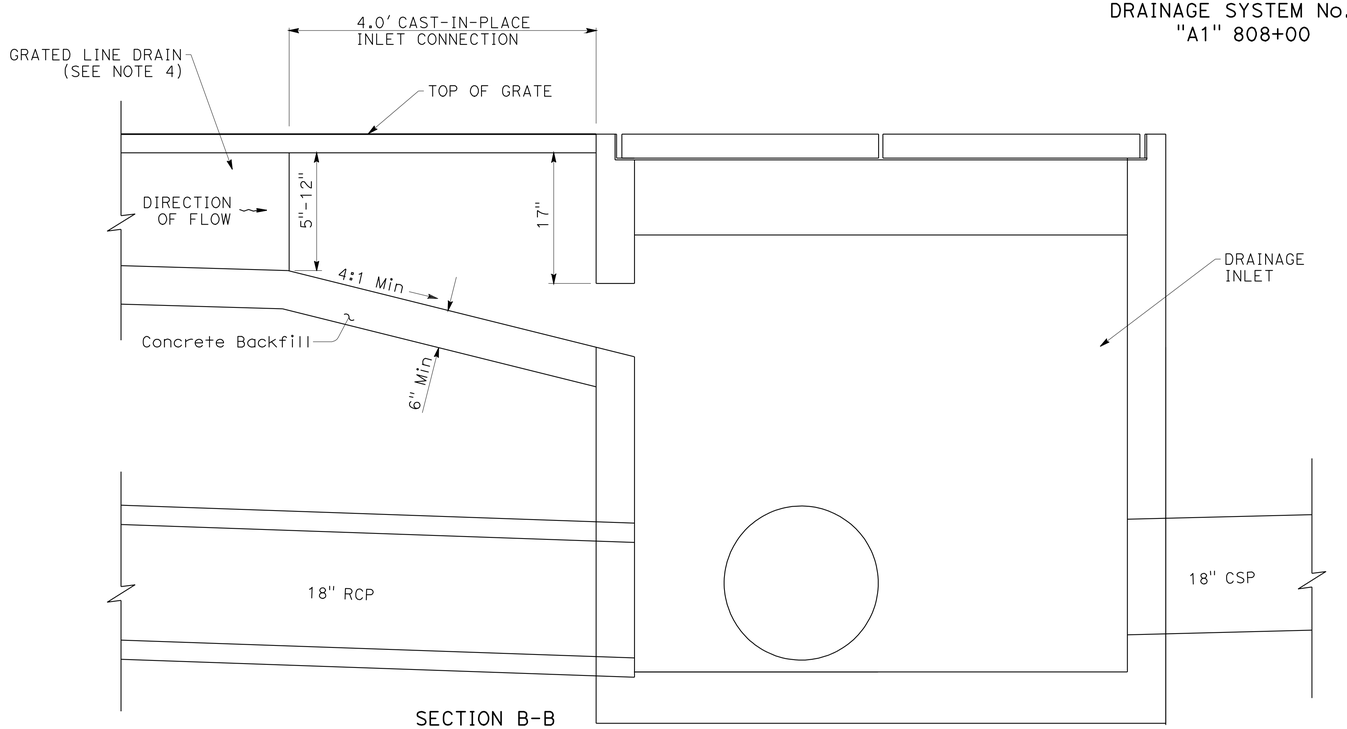

SECTION B-B

DRAINAGE SYSTEM No. 11
"A1" 568+73

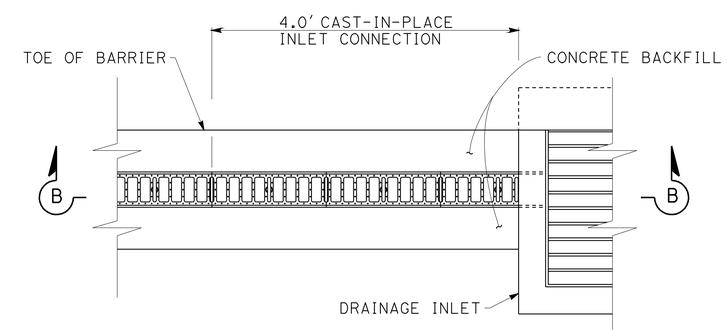

PLAN

DRAINAGE SYSTEM No. 11 41

GRATED LINE DRAIN INLET CONNECTION DETAILS

DRAINAGE DETAILS

NO SCALE

DD-12

REVISED BY	DATE REVISED
TOBY CRAWFORD	GINNY SEIBERT
CALCULATED-DESIGNED BY	CHECKED BY
FUNCTIONAL SUPERVISOR	STEVE TOPAL

STATE OF CALIFORNIA - DEPARTMENT OF TRANSPORTATION
Caltrans DESIGN

P:\proj1\02\3E760_plans\pse\23e760ic012.dgn

LAST REVISION 06-14-11 | DATE PLOTTED => 17-AUG-2011 | TIME PLOTTED => 10:54

Dist	COUNTY	ROUTE	POST MILES TOTAL PROJECT	SHEET No.	TOTAL SHEETS
02	Sis	5	R50.9/R58.2	153	329

REGISTERED CIVIL ENGINEER 06-14-11 DATE

06-15-11
PLANS APPROVAL DATE

REGISTERED PROFESSIONAL ENGINEER TOBY J. CRAWFORD No. C71138 Exp. 6-30-13 CIVIL STATE OF CALIFORNIA

THE STATE OF CALIFORNIA OR ITS OFFICERS OR AGENTS SHALL NOT BE RESPONSIBLE FOR THE ACCURACY OR COMPLETENESS OF SCANNED COPIES OF THIS PLAN SHEET.

NOTES:

1. (N) - NOT A SEPARATE PAY ITEM, FOR INFORMATION ONLY.
2. DRAINAGE INLETS SHALL MATCH ROADWAY PROFILE AND CROSS SLOPE.
3. INLETS SHALL BE FLUSH WITH FINISH GRADE.
4. ALL PIPE JOINTS STANDARD.

DRAINAGE QUANTITIES

PLAN SHEET No.	STATION	DRAINAGE SYSTEM No.	DRAINAGE ITEM	REMOVE FES	REMOVE AC DIKE	REMOVE CULVERT	REMOVE INLET	HEIGHT OF INLET	ADJUST INLET	CROSS SLOPE "SX"	LONGITUDINAL SLOPE "S"	REMOVE CONCRETE BARRIER (N)	ROADWAY EXCAVATION (N)	DITCH EXCAVATION (N)	PLACE HMA DIKE (TYPE E) *	PLACE HMA (MISC AREA) *	HOT MIX ASPHALT	SEAL ISOLATION JOINT *	MINOR CONCRETE (MINOR STRUCTURE) *	18" REINFORCED CONCRETE PIPE *	8" CORRUGATED STEEL PIPE (0.079" THICK)	18" CORRUGATED STEEL PIPE (0.109" THICK)	24" CORRUGATED STEEL PIPE (0.109" THICK)	24" CORRUGATED STEEL PIPE DOWNDRAIN (0.109" THICK)	24" ANCHOR ASSEMBLY	GRATED LINE DRAIN	24" STEEL FLARED END SECTION	18" CONCRETE FLARED END SECTION	ROCK SLOPE PROTECTION (LIGHT, METHOD B)	ROCK SLOPE PROTECTION FABRIC	MISCELLANEOUS IRON AND STEEL	MARKER (CULVERT)	CULVERT MARKER (BARRIER MOUNTED)	CONCRETE BARRIER (TYPE 60C) *	DESCRIPTION	DRAINAGE ITEM	DRAINAGE SYSTEM No.
				EA	LF	LF	EA	FT	EA	%	%	LF	CY	CY	LF	SQYD	TON	LF	CY	LF	LF	LF	LF	LF	LF	EA	LF	EA	EA	CY	SQYD	LB	EA	EA	LF			
L-2	448+94	1	a						1									13.5															1			ADJUST INLET AFTER STAGING	a	1
DD-4	491+11	2	a		17.0																															REMOVE AC DIKE	a	2
			b										4.4																							REMOVE AC APRON	b	
			c													20.9	5.0																			HMA APRON	c	
			d												20.0		0.6																			PLACE HMA DIKE (TYPE E)	d	
DD-3			e						1									10.0																		ADJUST INLET (TYPE G1)	e	
D-1	491+80		f			7.1																														REMOVE CULVERT	f	
			g																			4.0														18" x 4.0' CSP	g	
			h					3.6										14.0	1.1													326	1			TYPE G1 DI, GRATE TYPE 24-12	h	
DD-4	500+50	3	a		16.0																															REMOVE AC DIKE	a	3
			b										4.1																							REMOVE AC APRON	b	
			c													20.9	5.0																			HMA APRON	c	
			d												20.0		0.6																			PLACE HMA DIKE (TYPE E)	d	
			e																											9.3	22.7					RSP (LIGHT, METHOD B)	e	
DD-4	512+00	4	a		18.0																															REMOVE AC DIKE	a	4
			b										4.7																							REMOVE AC APRON	b	
			c													20.9	5.0																			HMA APRON	c	
			d												20.0		0.6																			PLACE HMA DIKE (TYPE E)	d	
L-6			e	1																																REMOVE FES	e	
			f																								1									24" STEEL FES	f	
L-7	520+28	5	a	1																																REMOVE FES	a	5
			b																								1									24" STEEL FES	b	
DD-4	524+00	6	a		17.0																															REMOVE AC DIKE	a	6
			b										4.4																							REMOVE AC APRON	b	
			c													20.9	5.0																			HMA APRON	c	
			d												20.0		0.6																			PLACE HMA DIKE (TYPE E)	d	
L-7	526+58	7	a	1																																REMOVE FES	a	7
			b																								1									24" STEEL FES	b	
DD-4	538+00	8	a		16.0																															REMOVE AC DIKE	a	8
			b										4.1																							REMOVE AC APRON	b	
			c													20.9	5.0																			HMA APRON	c	
			d												20.0		0.6																			PLACE HMA DIKE (TYPE E)	d	
DD-4	547+48	9	a		20.0																															REMOVE AC DIKE	a	9
			b										5.2																							REMOVE AC APRON	b	
			c													20.9	5.0																			HMA APRON	c	
			d												20.0		0.6																			PLACE HMA DIKE (TYPE E)	d	
DD-4	553+02	10	a		18.0																															REMOVE AC DIKE	a	10
			b										4.7																							REMOVE AC APRON	b	
			c													20.9	5.0																			HMA APRON	c	
			d												20.0		0.6																			PLACE HMA DIKE (TYPE E)	d	
SUBTOTAL DQ-1				3	122	7.1			2				31.6		140.0	146.3	39.2	37.5	1.1			4.0					3		9.3	22.7	326	2					

* QUANTITIES INCLUDED IN SUMMARY OF QUANTITIES SHEETS

DRAINAGE QUANTITIES
DQ-1

STATE OF CALIFORNIA - DEPARTMENT OF TRANSPORTATION
Caltrans® DESIGN

GINNY SEIBERT — REVISED BY
RUSSELL FLOOD — DATE REVISED
CALCULATED-DESIGNED BY
CHECKED BY
FUNCTIONAL SUPERVISOR
STEVE TOPAL

P:\proj\02\3E760_plans\pse\23e760id001.dgn

LAST REVISION 06-14-11
DATE PLOTTED => 17-AUG-2011
TIME PLOTTED => 10:54

Dist	COUNTY	ROUTE	POST MILES TOTAL PROJECT	SHEET No.	TOTAL SHEETS
02	Sis	5	R50.9/R58.2	154	329

REGISTERED CIVIL ENGINEER 06-14-11 DATE

06-15-11
PLANS APPROVAL DATE

REGISTERED PROFESSIONAL ENGINEER TOBY J. CRAWFORD No. C71138 Exp. 6-30-13 CIVIL STATE OF CALIFORNIA

THE STATE OF CALIFORNIA OR ITS OFFICERS OR AGENTS SHALL NOT BE RESPONSIBLE FOR THE ACCURACY OR COMPLETENESS OF SCANNED COPIES OF THIS PLAN SHEET.

NOTE:

1. (N) - NOT A SEPARATE PAY ITEM, FOR INFORMATION ONLY

DRAINAGE QUANTITIES

PLAN SHEET No.	STATION	DRAINAGE SYSTEM No.	DRAINAGE ITEM	REMOVE FES (EA)	REMOVE AC DIKE (LF)	REMOVE CULVERT (LF)	REMOVE INLET (EA)	HEIGHT OF INLET (FT)	ADJUST INLET (EA)	CROSS SLOPE "SX" (%)	LONGITUDINAL SLOPE "S" (%)	REMOVE CONCRETE BARRIER (N) (LF)	ROADWAY EXCAVATION (N) (CY)	DITCH EXCAVATION (N) (CY)	PLACE HMA DIKE (TYPE E) * (LF)	PLACE HMA (MISC AREA) * (SQYD)	HOT MIX ASPHALT (TON)	SEAL ISOLATION JOINT * (LF)	MINOR CONCRETE (MINOR STRUCTURE) * (CY)	18" REINFORCED CONCRETE PIPE * (LF)	8" CORRUGATED STEEL PIPE (0.079" THICK) (LF)	18" CORRUGATED STEEL PIPE (0.109" THICK) (LF)	24" CORRUGATED STEEL PIPE (0.109" THICK) (LF)	24" CORRUGATED STEEL PIPE DOWNDRAIN (0.109" THICK) (LF)	24" ANCHOR ASSEMBLY (EA)	GRATED LINE DRAIN (LF)	24" STEEL FLARED END SECTION (EA)	18" CONCRETE FLARED END SECTION (EA)	ROCK SLOPE PROTECTION (LIGHT, METHOD B) (CY)	ROCK SLOPE PROTECTION FABRIC (SQYD)	MISCELLANEOUS IRON AND STEEL (LB)	MARKER (CULVERT) (EA)	CULVERT MARKER (BARRIER MOUNTED) (EA)	CONCRETE BARRIER (TYPE 60C) * (LF)	DESCRIPTION	DRAINAGE ITEM	DRAINAGE SYSTEM No.
D-2	567+77	11	a					2.9										13.0	1.3												652		1		TYPE G1 (Mod) DI, GRATE TYPE 24-12 (2)	a	11
			b						1																									ADJUST INLET AFTER STAGING	b	
			c																	45.1														18" x 45.1′ RCP	c	
	568+25		d					5.2										13.0	2.0												652		1		TYPE G1 (Mod) DI, GRATE TYPE 24-12 (2)	d	
			e						1																									ADJUST INLET AFTER STAGING	e	
			f																	43.9														18" x 43.9′ RCP	f	
	568+73		g				1																											REMOVE INLET (TYPE GT3)	g	
			h			6.0																												REMOVE CULVERT	h	
			i																					6.0										24" x 6.0′ CSP	i	
			j			6.0																												REMOVE CULVERT	j	
			k																			6.0												18" x 6.0′ CSP	k	
			l					6.8										22.8	3.8												652		1		TYPE G2 (Mod) DI, GRATE TYPE 24-12 (2)	l	
			m			5.0																												REMOVE CULVERT	m	
			n																					4.0										24" x 4.0′ CSP	n	
	568+73		o																										70.8	87.9					RSP (LIGHT, METHOD B)	o	
			p															41.0							20.0									20′ GRATED LINE DRAIN	p	
D-3	570+65		q					3.0		2.0	0.0							13.0	1.3												652		1		TYPE G1 (Mod) DI, GRATE TYPE 24-12 (2)	q	
			r						1																									ADJUST INLET AFTER STAGING	r	
			s			15.0																												REMOVE CULVERT	s	
			t																			12.1												18" x 12.1′ CSP	t	
	570+80		u				1																											REMOVE INLET (TYPE GDO)	u	
			v					2.6										13.0	1.3												652		1		TYPE G1 (Mod) DI, GRATE TYPE 24-12 (2)	v	
DD-1	573+11	12	a						1									13.5															1		ADJUST INLET (TYPE GDO)	a	12
			b									7.0																						7.0	REMOVE AND REPLACE CONCRETE BARRIER	b	
DD-1	580+00	13	a						1									13.5															1		ADJUST INLET (TYPE GDO)	a	13
			b									7.0																						7.0	REMOVE AND REPLACE CONCRETE BARRIER	b	
DD-1	599+60	14	a						1									13.5															1		ADJUST INLET (TYPE GDO)	a	14
			b									7.0																						7.0	REMOVE AND REPLACE CONCRETE BARRIER	b	
DD-1	605+75	15	a						1									13.5															1		ADJUST INLET (TYPE GDO)	a	15
			b									7.0																						7.0	REMOVE AND REPLACE CONCRETE BARRIER	b	
D-3	614+73	16	a				1																											REMOVE INLET (TYPE GT3)	a	16
	614+75		b					3.0		5.0	6.0							13.0	1.3												652		1		TYPE G1 (Mod) DI, GRATE TYPE 24-12 (2)	b	
			c																					6.0										24" x 6.0′ CSP	c	
			d			7.8																												REMOVE CULVERT	d	
			e																		6.0													8" x 6.0′ CSP	e	
			f			2.6																												REMOVE CULVERT	f	
SUBTOTAL DQ-2						42.4	3		7			28.0						182.8	11.0	89.0	6.0	18.1	16.0			20.0			70.8	87.9	3912		10	28.0			

* QUANTITIES INCLUDED IN SUMMARY OF QUANTITIES SHEETS.

DRAINAGE QUANTITIES
DQ-2

GINNY SEIBERT — REVISED BY
RUSSELL FLOOD — DATE REVISED
CALCULATED-DESIGNED BY
CHECKED BY
FUNCTIONAL SUPERVISOR
STEVE TOPAL

STATE OF CALIFORNIA - DEPARTMENT OF TRANSPORTATION
Caltrans®
DESIGN

P:\proj\02\3E760_plans\pse\23e760id002.dgn

LAST REVISION 06-14-11 | DATE PLOTTED => 17-AUG-2011 | TIME PLOTTED => 10:54

Dist	COUNTY	ROUTE	POST MILES TOTAL PROJECT	SHEET No.	TOTAL SHEETS
02	Sis	5	R50.9/R58.2	155	329

REGISTERED CIVIL ENGINEER 06-14-11 DATE

06-15-11
PLANS APPROVAL DATE

REGISTERED PROFESSIONAL ENGINEER TOBY J. CRAWFORD No. C71138 Exp. 6-30-13 CIVIL STATE OF CALIFORNIA

THE STATE OF CALIFORNIA OR ITS OFFICERS OR AGENTS SHALL NOT BE RESPONSIBLE FOR THE ACCURACY OR COMPLETENESS OF SCANNED COPIES OF THIS PLAN SHEET.

NOTE:

1. (N) - NOT A SEPARATE PAY ITEM, FOR INFORMATION ONLY

DRAINAGE QUANTITIES

PLAN SHEET No.	STATION	DRAINAGE SYSTEM No.	DRAINAGE ITEM	REMOVE FES	REMOVE AC DIKE	REMOVE CULVERT	REMOVE INLET	HEIGHT OF INLET	ADJUST INLET	CROSS SLOPE "Sx"	LONGITUDINAL SLOPE "S" (N)	REMOVE CONCRETE BARRIER (N)	ROADWAY EXCAVATION (N)	DITCH EXCAVATION *	PLACE HMA DIKE (TYPE E) *	PLACE HMA (Misc AREA)	HOT MIX ASPHALT	SEAL ISOLATION JOINT *	MINOR CONCRETE (MINOR STRUCTURE) *	18" REINFORCED CONCRETE PIPE *	8" CORRUGATED STEEL PIPE (0.079" THICK)	18" CORRUGATED STEEL PIPE (0.109" THICK)	24" CORRUGATED STEEL PIPE (0.109" THICK)	24" CORRUGATED STEEL PIPE DOWNDRAIN (0.109" THICK)	24" ANCHOR ASSEMBLY	GRATED LINE DRAIN	24" STEEL FLARED END SECTION	18" CONCRETE FLARED END SECTION	ROCK SLOPE PROTECTION (LIGHT, METHOD B)	ROCK SLOPE PROTECTION FABRIC	MISCELLANEOUS IRON AND STEEL	MARKER (CULVERT)	CULVERT MARKER (BARRIER MOUNTED)	CONCRETE BARRIER (TYPE 60C) *	DESCRIPTION	DRAINAGE ITEM	DRAINAGE SYSTEM No.
				EA	LF	LF	EA	FT	EA	%	%	LF	CY	CY	LF	SQYD	TON	LF	CY	LF	LF	LF	LF	LF	LF	EA	LF	EA	EA	CY	SQYD	LB	EA	EA	LF			
D-4	615+60	17	a					3.5		2.0	6.0							13.0	1.5													652		1		TYPE G1 (Mod) DI, GRATE TYPE 24-12 (2)	a	17
			b																	17.1																18" x 17.1' RCP	b	
	615+80		c					3.5		2.0	6.0							13.0	1.5													652		1		TYPE G1 (Mod) DI, GRATE TYPE 24-12 (2)	c	
			d																	568.5																18" x 568.5' RCP	d	
	621+50		e				1																													REMOVE INLET (TYPE GDO)	e	
			f					3.1		5.0	6.0								1.4													652		1		TYPE G1 (Mod) DI, GRATE TYPE 24-12 (2)	f	
			g									7.0																							7.0	REMOVE AND REPLACE CONCRETE BARRIER	g	
DD-1	630+25	18	a						1									13.5																1		ADJUST INLET (TYPE GDO)	a	18
			b									7.0																							7.0	REMOVE AND REPLACE CONCRETE BARRIER	b	
DD-1	637+05	19	a						1									13.5																1		ADJUST INLET (TYPE GDO)	a	19
			b									7.0																							7.0	REMOVE AND REPLACE CONCRETE BARRIER	b	
DD-1	644+50	20	a						1									13.5																1		ADJUST INLET (TYPE GDO)	a	20
			b									7.0																							7.0	REMOVE AND REPLACE CONCRETE BARRIER	b	
DD-1	652+17	21	a						1									13.5																1		ADJUST INLET (TYPE GDO)	a	21
			b									7.0																							7.0	REMOVE AND REPLACE CONCRETE BARRIER	b	
D-5	653+00	22	a									7.0																							7.0	REMOVE AND REPLACE CONCRETE BARRIER	a	22
			b			9.0																														REMOVE CULVERT	b	
			c																				6.0													24" x 6.0' CSP	c	
			d					4.1										13.0	1.6													652		1		TYPE G1 (Mod) DI, GRATE TYPE 24-12 (2)	d	
	654+00		e									7.0																							7.0	REMOVE AND REPLACE CONCRETE BARRIER	e	
			f			6.0																														REMOVE CULVERT	f	
			g				1																													REMOVE INLET (TYPE GDO)	g	
			h					4.0										13.0	1.6													652		1		TYPE G1 (Mod) DI, GRATE TYPE 24-12 (2)	h	
	654+30		i																				6.0													24" x 6.0' CSP	i	
			j																	27.1																18" x 27.1' RCP	j	
			k									7.0																							7.0	REMOVE AND REPLACE CONCRETE BARRIER	k	
			l					2.5		2.0	3.5							13.0	1.3													652		1		TYPE G1 (Mod) DI, GRATE TYPE 24-12 (2)	l	
DD-1	671+00	23	a						1									13.5																1		ADJUST INLET (TYPE GDO)	a	23
			b									7.0																							7.0	REMOVE AND REPLACE CONCRETE BARRIER	b	
DD-2	678+53	24	a						1									13.5																1		ADJUST INLET (TYPE GDO)	a	24
			b									7.0																							7.0	REMOVE AND REPLACE CONCRETE BARRIER	b	
DD-1	686+00	25	a						1									13.5																1		ADJUST INLET (TYPE GDO)	a	25
			b									7.0																							7.0	REMOVE AND REPLACE CONCRETE BARRIER	b	
DD-1	690+92	26	a						1									13.5																1		ADJUST INLET (TYPE GDO)	a	26
			b									7.0																							7.0	REMOVE AND REPLACE CONCRETE BARRIER	b	
D-6	692+20	27	a					3.0		2.0	3.5							13.0	1.3													652		1		TYPE G1 (Mod) DI, GRATE TYPE 24-12 (2)	a	27
	692+50		b					3.0		2.0	3.5							13.0	1.3													652		1		TYPE G1 (Mod) DI, GRATE TYPE 24-12 (2)	b	
			c																	27.1																18" x 27.1' RCP	c	
			d																	52.8																18" x 52.8' RCP	d	
			e											18.0																						DITCH EXCAVATION	e	
			f																										1							18" CONCRETE FES	f	
SUBTOTAL DQ-3						15.0	2		8			84.0		18.0				199.0	11.5	692.6			12.0					1			5216		16	84.0			

* QUANTITIES INCLUDED IN SUMMARY OF QUANTITIES SHEETS.
** SUBTOTAL TO BE CARRIED OVER TO NEXT SHEET

DRAINAGE QUANTITIES
DQ-3

REVISED BY | DATE REVISED
GINNY SEIBERT | RUSSELL FLOOD
CALCULATED-DESIGNED BY | CHECKED BY
FUNCTIONAL SUPERVISOR | STEVE TOPAL

STATE OF CALIFORNIA - DEPARTMENT OF TRANSPORTATION
Caltrans® DESIGN

P:\proj\02\3E760_plans\pse\23e760id003.dgn

LAST REVISION 06-14-11 | DATE PLOTTED => 17-AUG-2011 | TIME PLOTTED => 10:54

Dist	COUNTY	ROUTE	POST MILES TOTAL PROJECT	SHEET No.	TOTAL SHEETS
02	Sis	5	R50.9/R58.2	156	329

REGISTERED CIVIL ENGINEER 06-14-11 DATE

06-15-11
PLANS APPROVAL DATE

REGISTERED PROFESSIONAL ENGINEER TOBY J. CRAWFORD No. C71138 Exp. 6-30-13 CIVIL STATE OF CALIFORNIA

THE STATE OF CALIFORNIA OR ITS OFFICERS OR AGENTS SHALL NOT BE RESPONSIBLE FOR THE ACCURACY OR COMPLETENESS OF SCANNED COPIES OF THIS PLAN SHEET.

NOTE:

1. (N) - NOT A SEPARATE PAY ITEM, FOR INFORMATION ONLY

DRAINAGE QUANTITIES

PLAN SHEET No.	STATION	DRAINAGE SYSTEM No.	DRAINAGE ITEM	REMOVE FES (EA)	REMOVE AC DIKE (LF)	REMOVE CULVERT (LF)	REMOVE INLET (EA)	HEIGHT OF INLET (FT)	ADJUST INLET (EA)	CROSS SLOPE "Sx" (%)	LONGITUDINAL SLOPE "S" (%)	(N) REMOVE CONCRETE BARRIER (LF)	(N) ROADWAY EXCAVATION (CY)	* DITCH EXCAVATION (CY)	* PLACE HMA DIKE (TYPE E) (LF)	PLACE HMA (MISC AREA) (SQYD)	HOT MIX ASPHALT (TON)	SEAL ISOLATION JOINT (LF)	* MINOR CONCRETE (MINOR STRUCTURE) (CY)	* 18" REINFORCED CONCRETE PIPE (LF)	* 8" CORRUGATED STEEL PIPE (0.079" THICK) (LF)	18" CORRUGATED STEEL PIPE (0.109" THICK) (LF)	24" CORRUGATED STEEL PIPE (0.109" THICK) (LF)	24" CORRUGATED STEEL PIPE DOWNDRAIN (0.109" THICK) (LF)	24" ANCHOR ASSEMBLY (EA)	GRATED LINE DRAIN (LF)	24" STEEL FLARED END SECTION (EA)	18" CONCRETE FLARED END SECTION (EA)	ROCK SLOPE PROTECTION (LIGHT, METHOD B) (CY)	ROCK SLOPE PROTECTION FABRIC (SQYD)	MISCELLANEOUS IRON AND STEEL (LB)	MARKER (CULVERT) (EA)	CULVERT MARKER (BARRIER MOUNTED) (EA)	CONCRETE BARRIER (TYPE 60C) * (LF)	DESCRIPTION	DRAINAGE ITEM	DRAINAGE SYSTEM No.
D-7	720+00	28	a				1																												REMOVE INLET (TYPE GT3)	a	28
			b					3.8		5.0	6.0							13.0	1.6												652		1		TYPE G1 (Mod) DI, GRATE TYPE 24-12 (2)	b	
			c			0.8																													REMOVE CULVERT	c	
			d									7.0																						7.0	REMOVE AND REPLACE CONCRETE BARRIER	d	
DD-4			e																										9.3	22.7					PLACE RSP (LIGHT, METHOD B)	e	
D-7	724+02	29	a				1																												REMOVE INLET (TYPE GT4)	a	29
			b					9.0		7.0	5.5							17.9	5.3												652		1		TYPE G2 (Mod) DI, GRATE TYPE 24-12 (2)	b	
			c			6.0																													REMOVE CULVERT	c	
			d																				6.0												24" x 6.0′ CSP	d	
			e			6.0																													REMOVE CULVERT	e	
			f																				6.0												24" x 6.0′ CSP	f	
			g									15.0																						15.0	REMOVE AND REPLACE CONCRETE BARRIER	g	
D-8	730+50	30	a					2.9		2.0	6.0							13.0	1.3												652		1		TYPE G1 (Mod) DI, GRATE TYPE 24-12 (2)	a	30
	730+65		b																	12.1															18" x 12.1′ RCP	b	
			c									7.0																						7.0	REMOVE AND REPLACE CONCRETE BARRIER	c	
			d					3.0		2.0	6.0							13.0	1.3												652		1		TYPE G1 (Mod) DI, GRATE TYPE 24-12 (2)	d	
	734+60		e									7.0																						7.0	REMOVE AND REPLACE CONCRETE BARRIER	e	
			f																	393.0															18" x 393′ RCP	f	
			g					4.7		5.0	6.0							13.0	1.9												652		1		TYPE G1 (Mod) DI, GRATE TYPE 24-12 (2)	g	
			h			6.3																													REMOVE CULVERT	h	
			i																				2.4												24" x 2.4′ CSP	i	
			j			2.3																													REMOVE CULVERT	j	
			k																		6.0														8" x 6.0′ CSP	k	
			l				1																												REMOVE INLET (TYPE GT3)	l	
			m					3.7										13.0	1.5												652		1		TYPE G1 (Mod) DI, GRATE TYPE 24-12 (2)	m	
			n									7.0																						7.0	REMOVE AND REPLACE CONCRETE BARRIER	n	
D-9	743+49	31	a				1																												REMOVE INLET (TYPE GT2)	a	31
			b					5.4		5.0	3.5							13.0	2.0												652		1		TYPE G1 (Mod) DI, GRATE TYPE 24-12 (2)	b	
			c			6.0																													REMOVE CULVERT	c	
			d																				4.0												24" x 4.0′ CSP	d	
			e									10.8																						10.8	REMOVE AND REPLACE CONCRETE BARRIER	e	
D-9	748+64	32	a				1																												REMOVE INLET (TYPE GT3)	a	32
			b					3.9		5.0	3.5							13.0	1.6												652		1		TYPE G1 (Mod) DI, GRATE TYPE 24-12 (2)	b	
			c			11.0																													REMOVE CULVERT	c	
			d																				11.0												24" x 11.0′ CSP	d	
	749+00		e									10.8																						10.8	REMOVE AND REPLACE CONCRETE BARRIER	e	
			f																	33.2															18" x 33.2′ RCP	f	
			g					2.5		2.0	3.5							13.0	1.3												652		1		TYPE G1 (Mod) DI, GRATE TYPE 24-12 (2)	g	
			h									7.0																						7.0	REMOVE AND REPLACE CONCRETE BARRIER	h	
SUBTOTAL DQ-4						38.4	5					71.6						121.9	17.8	438.3	6.0		29.4						9.3	22.7	5868		9	71.6			

* QUANTITIES INCLUDED IN SUMMARY OF QUANTITIES SHEETS.

DRAINAGE QUANTITIES
DQ-4

GINNY SEIBERT — REVISED BY
RUSSELL FLOOD — DATE REVISED
CALCULATED-DESIGNED BY
CHECKED BY
FUNCTIONAL SUPERVISOR
STEVE TOPAL

STATE OF CALIFORNIA - DEPARTMENT OF TRANSPORTATION
Caltrans® DESIGN

P:\proj1\02\3E760_plans\pse\23e760id004.dgn

LAST REVISION 06-14-11
DATE PLOTTED => 17-AUG-2011
TIME PLOTTED => 10:55

Dist	COUNTY	ROUTE	POST MILES TOTAL PROJECT	SHEET No.	TOTAL SHEETS
02	Sis	5	R50.9/R58.2	157	329

REGISTERED CIVIL ENGINEER 06-14-11 DATE

06-15-11
PLANS APPROVAL DATE

REGISTERED PROFESSIONAL ENGINEER TOBY J. CRAWFORD No. C71138 Exp. 6-30-13 CIVIL STATE OF CALIFORNIA

THE STATE OF CALIFORNIA OR ITS OFFICERS OR AGENTS SHALL NOT BE RESPONSIBLE FOR THE ACCURACY OR COMPLETENESS OF SCANNED COPIES OF THIS PLAN SHEET.

NOTE:

1. (N) - NOT A SEPARATE PAY ITEM, FOR INFORMATION ONLY

DRAINAGE QUANTITIES

PLAN SHEET No.	STATION	DRAINAGE SYSTEM No.	DRAINAGE ITEM	REMOVE FES	REMOVE AC DIKE	REMOVE CULVERT	REMOVE INLET	HEIGHT OF INLET	ADJUST INLET	CROSS SLOPE "Sx"	LONGITUDINAL SLOPE "S" (N)	REMOVE CONCRETE BARRIER (N)	ROADWAY EXCAVATION (N)	DITCH EXCAVATION *	PLACE HMA DIKE (TYPE E) *	PLACE HMA (Misc AREA)	HOT MIX ASPHALT	SEAL ISOLATION JOINT *	MINOR CONCRETE (MINOR STRUCTURE) *	18" REINFORCED CONCRETE PIPE *	8" CORRUGATED STEEL PIPE (0.079" THICK)	18" CORRUGATED STEEL PIPE (0.109" THICK)	24" CORRUGATED STEEL PIPE (0.109" THICK)	24" CORRUGATED STEEL PIPE DOWNDRAIN (0.109" THICK)	24" ANCHOR ASSEMBLY	GRATED LINE DRAIN	24" STEEL FLARED END SECTION	18" CONCRETE FLARED END SECTION	ROCK SLOPE PROTECTION (LIGHT, METHOD B)	ROCK SLOPE PROTECTION FABRIC	MISCELLANEOUS IRON AND STEEL	MARKER (CULVERT)	CULVERT MARKER (BARRIER MOUNTED)	CONCRETE BARRIER (TYPE 60C) *	DESCRIPTION	DRAINAGE ITEM	DRAINAGE SYSTEM No.
				EA	LF	LF	EA	FT	EA	%	%	LF	CY	CY	LF	SQYD	TON	LF	CY	LF	LF	LF	LF	LF	EA	LF	EA	EA	CY	SQYD	LB	EA	EA	LF			
D-10	755+20	33	a				1																												REMOVE INLET (TYPE GT3)	a	33
			b					3.6		5.0	3.5							13.0	1.5												652		1		TYPE G1 (Mod) DI, GRATE TYPE 24-12 (2)	b	
			c			1.4																													REMOVE CULVERT	c	
			d									7.0																						7.0	REMOVE AND REPLACE CONCRETE BARRIER	d	
D-10	762+50	34	a				1																												REMOVE INLET (TYPE GT3)	a	34
			b					2.9		5.0	3.5							13.0	1.3												652		1		TYPE G1 (Mod) DI, GRATE TYPE 24-12 (2)	b	
			c			0.7																													REMOVE CULVERT	c	
			d									7.0																						7.0	REMOVE AND REPLACE CONCRETE BARRIER	d	
D-10	767+50	35	a				1																												REMOVE INLET (TYPE GT3)	a	35
			b					3.5		5.0	3.5							13.0	1.5												652		1		TYPE G1 (Mod) DI, GRATE TYPE 24-12 (2)	b	
			c			1.0																													REMOVE CULVERT	c	
			d									7.0																						7.0	REMOVE AND REPLACE CONCRETE BARRIER	d	
D-11	773+00	36	a				1																												REMOVE INLET (TYPE GT3)	a	36
			b					3.5		5.0	6.0							13.0	1.5												652		1		TYPE G1 (Mod) DI, GRATE TYPE 24-12 (2)	b	
			c			2.0																													REMOVE CULVERT	c	
			d									10.5																						10.5	REMOVE AND REPLACE CONCRETE BARRIER	d	
D-11	773+75	37	a					3.2										13.0	1.4												652		1		TYPE G1 (Mod) DI, GRATE TYPE 24-12 (2)	a	37
			b																	37.2															18" x 37.2' RCP	b	
	774+15		c					3.5		2.0	6.0							13.0	1.5												652		1		TYPE G1 (Mod) DI, GRATE TYPE 24-12 (2)	c	
			d																	52.4															18" x 52.4' RCP	d	
			e																									1							18" CONCRETE FES	e	
			f											7.6																					DITCH EXCAVATION	f	
D-12	782+99	38	a			8.5																													REMOVE CULVERT	a	38
			b																				16.0												24" x 16.0' CSP DOWN DRAIN	b	
			c																			2.0													24" x 2.0' CSP	c	
	783+01		d																					2											24" ANCHOR ASSEMBLY (2)	d	
			e				1																												REMOVE INLET (TYPE GT3)	e	
			f					3.1		5	6							13.0	1.4												652		1		TYPE G1 (Mod) DI, GRATE TYPE 24-12 (2)	f	
			g			1.1																													REMOVE CULVERT	g	
D-12	793+13	39	a				1																												REMOVE INLET (TYPE GT3)	a	39
			b					3.1		5.0	6.0							13.0	1.4												652		1		TYPE G1 (Mod) DI, GRATE TYPE 24-12 (2)	b	
			c			0.6																													REMOVE CULVERT	c	
DD-11			d					9.2											3.8												326	1			TYPE GO DI, GRATE TYPE 24-12	d	
			e			6.7																													REMOVE CULVERT	e	
			f																			4.0													24" x 4.0' CSP	f	
D-12	802+50	40	a				1																												REMOVE INLET (TYPE GT3)	a	40
			b					3.0		5.0	6.0							13.0	1.3												652		1		TYPE G1 (Mod) DI, GRATE TYPE 24-12 (2)	b	
			c			1.1																													REMOVE CULVERT	c	
			d																		3.0														8" x 3.0' CSP	d	
SUBTOTAL DQ-5						23.1	7					31.5		7.6				117.0	16.6	89.6	3.0		6.0	16.0	2			1			6194	1	9	31.5			

* QUANTITIES INCLUDED IN SUMMARY OF QUANTITIES SHEETS.

DRAINAGE QUANTITIES
DQ-5

GINNY SEIBERT — REVISED BY
RUSSELL FLOOD — DATE REVISED
CALCULATED-DESIGNED BY
CHECKED BY
FUNCTIONAL SUPERVISOR
STEVE TOPAL

STATE OF CALIFORNIA - DEPARTMENT OF TRANSPORTATION
Caltrans®
DESIGN

P:\proj\02\3E760_plans\pse\23e760id005.dgn

LAST REVISION 06-14-11 DATE PLOTTED => 17-AUG-2011 TIME PLOTTED => 10:55

Dist	COUNTY	ROUTE	POST MILES TOTAL PROJECT	SHEET No.	TOTAL SHEETS
02	Sis	5	R50.9/R58.2	158	329

REGISTERED CIVIL ENGINEER 06-14-11 DATE

06-15-11
PLANS APPROVAL DATE

REGISTERED PROFESSIONAL ENGINEER TOBY J. CRAWFORD No. C71138 Exp. 6-30-13 CIVIL STATE OF CALIFORNIA

THE STATE OF CALIFORNIA OR ITS OFFICERS OR AGENTS SHALL NOT BE RESPONSIBLE FOR THE ACCURACY OR COMPLETENESS OF SCANNED COPIES OF THIS PLAN SHEET.

NOTE:

1. (N) - NOT A SEPARATE PAY ITEM, FOR INFORMATION ONLY

DRAINAGE QUANTITIES

PLAN SHEET No.	STATION	DRAINAGE SYSTEM No.	DRAINAGE ITEM	REMOVE FES	REMOVE AC DIKE	REMOVE CULVERT	REMOVE INLET	HEIGHT OF INLET	ADJUST INLET	CROSS SLOPE "Sx" (N)	LONGITUDINAL SLOPE "S" (N)	REMOVE CONCRETE BARRIER (N)	ROADWAY EXCAVATION *	DITCH EXCAVATION *	PLACE HMA DIKE (TYPE E)	PLACE HMA (Misc AREA)	HOT MIX ASPHALT *	SEAL ISOLATION JOINT *	MINOR CONCRETE (MINOR STRUCTURE) *	18" REINFORCED CONCRETE PIPE	8" CORRUGATED STEEL PIPE (0.079" THICK)	18" CORRUGATED STEEL PIPE (0.109" THICK)	24" CORRUGATED STEEL PIPE (0.109" THICK)	24" CORRUGATED STEEL PIPE DOWNDRAIN (0.109" THICK)	24" ANCHOR ASSEMBLY	GRATED LINE DRAIN	24" STEEL FLARED END SECTION	18" CONCRETE FLARED END SECTION	ROCK SLOPE PROTECTION (LIGHT, METHOD B)	ROCK SLOPE PROTECTION FABRIC	MISCELLANEOUS IRON AND STEEL	MARKER (CULVERT)	CULVERT MARKER (BARRIER MOUNTED)	CONCRETE BARRIER (TYPE 60C) *	DESCRIPTION	DRAINAGE ITEM	DRAINAGE SYSTEM No.
				EA	LF	LF	EA	FT	EA	%	%	LF	CY	CY	LF	SQYD	TON	LF	CY	LF	LF	LF	LF	LF	EA	LF	EA	EA	CY	SQYD	LB	EA	EA	LF			
D-13	807+25	41	a					3.0										13.0	1.3												652		1		TYPE G1 (Mod) DI, GRATE TYPE 24-12 (2)	a	41
			b																	32.1															18" x 32.1' RCP	b	
	807+60		c					3.5										13.0	1.5												652		1		TYPE G1 (Mod) DI, GRATE TYPE 24-12 (2)	c	
			d																	37.1															18" x 37.1' RCP	d	
			e															84.0								36.0									GRATED LINE DRAIN	e	
	808+00		f					3.7										13.0	1.5												652		1		TYPE G1 (Mod) DI, GRATE TYPE 24-12 (2)	f	
			g																	402.0															18" x 402' RCP	g	
	812+05		h			445.3																													REMOVE CULVERT	h	
			i				1																												REMOVE INLET (TYPE G1)	i	
			j					3.9										13.0	1.6												652		1		TYPE G1 (Mod) DI, GRATE TYPE 24-12 (2)	j	
			k						1																										ADJUST INLET AFTER STAGING	k	
C-16		42	a					4.0											1.2												326	1			TYPE G1 DI, GRATE TYPE 24-12	a	42
			b																	90.0															18" x 140.0' RCP	b	
			c																									1							18" CONCRETE FES	c	
			d											3.0																					DITCH EXCAVATION	d	
SUBTOTAL DQ-6						445.3	1		1					3.0				136.0	7.1	561.2						36.0		1			2934	1	4		SUBTOTAL DQ-6		
SUBTOTAL DQ-5						23.1	7					31.5		7.6				117.0	16.6	89.6	3.0		6.0	16.0	2			1			6194	1	9	31.5	SUBTOTAL DQ-5		
SUBTOTAL DQ-4						38.4	5					71.6						121.9	17.8	438.3	6.0		29.4						9.3	22.7	5868		9	71.6	SUBTOTAL DQ-4		
SUBTOTAL DQ-3						15.0	2		8			84.0		18.0				199.0	11.5	692.6			12.0					1			5216		16	84.0	SUBTOTAL DQ-3		
SUBTOTAL DQ-2						42.4	3		7			28.0						182.8	1.0	89.0	6.0	18.1	16.0			20.0			70.8	87.9	3912		10	28.0	SUBTOTAL DQ-2		
SUBTOTAL DQ-1				3	122	7.1			2				31.6		140.0	146.3	39.2	37.5	1.1			4.0					3		9.3	22.7	326	2			SUBTOTAL DQ-1		
TOTAL				3	122	571.3	18		18			215.1	31.6	28.6	140.0	146.3	39.2	794.2	65.1	1870.7	15.0	22.1	63.4	16.0	2	56.0	3	3	89.4	133.3	24,450	4	48	215.1			

* QUANTITIES INCLUDED IN SUMMARY OF QUANTITIES SHEETS

DRAINAGE QUANTITIES
DQ-6

GINNY SEIBERT — REVISED BY
RUSSELL FLOOD — DATE REVISED
CALCULATED-DESIGNED BY
CHECKED BY
FUNCTIONAL SUPERVISOR
STEVE TOPAL

STATE OF CALIFORNIA - DEPARTMENT OF TRANSPORTATION
Caltrans
DESIGN

P:\proj1\02\3E760_plans\pse\23e760id006.dgn

LAST REVISION 06-14-11 | DATE PLOTTED => 17-AUG-2011 TIME PLOTTED => 10:55

Dist	COUNTY	ROUTE	POST MILES TOTAL PROJECT	SHEET No.	TOTAL SHEETS
02	Sis	5	R50.9/R58.2	159	329

REGISTERED CIVIL ENGINEER 06-14-11 DATE

06-15-11
PLANS APPROVAL DATE

REGISTERED PROFESSIONAL ENGINEER
TOBY J. CRAWFORD
No. C71138
Exp. 6-30-13
CIVIL
STATE OF CALIFORNIA

THE STATE OF CALIFORNIA OR ITS OFFICERS OR AGENTS SHALL NOT BE RESPONSIBLE FOR THE ACCURACY OR COMPLETENESS OF SCANNED COPIES OF THIS PLAN SHEET.

NOTES:

1. FOR ACCURATE RIGHT OF WAY DATA, CONTACT RIGHT OF WAY ENGINEERING AT THE DISTRICT OFFICE.
2. CALTRANS UTILITIES ARE NOT POSITIVELY LOCATED.

ABBREVIATIONS:

CT CALTRANS

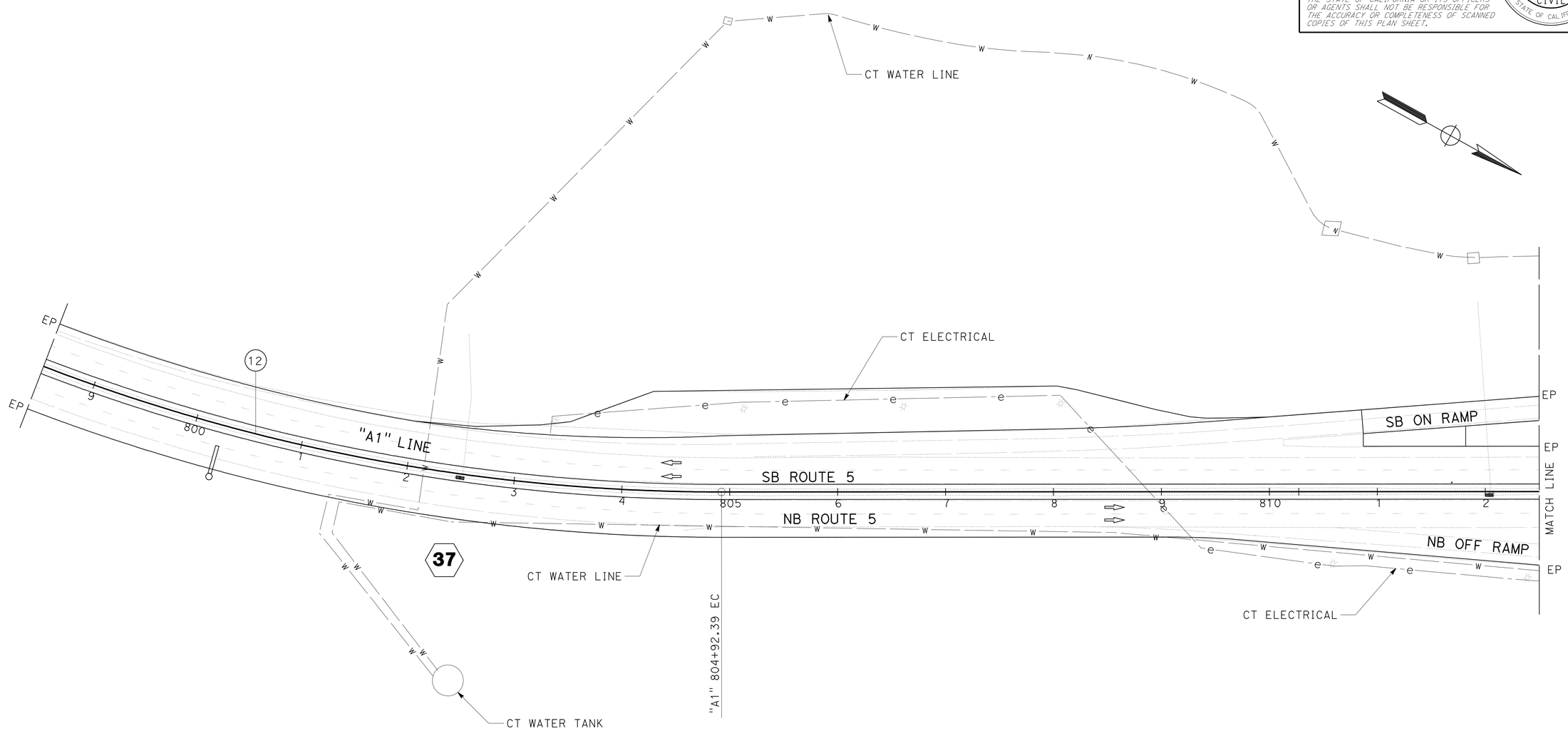

CURVE DATA

No. (#)	R	Δ	T	L
12	1750.01′	-92°42′14"	1834.61′	2831.50′

UTILITY PLAN

SCALE: 1" = 50′

U-1

REVISED BY | DATE REVISED
WILL LESLIE | TOBY CRAWFORD
CALCULATED-DESIGNED BY | CHECKED BY
FUNCTIONAL SUPERVISOR
STEVE TOPAL

STATE OF CALIFORNIA - DEPARTMENT OF TRANSPORTATION
Caltrans
DESIGN

P:\proj1\02\3E760_plans\pse\23e760ka001.dgn

LAST REVISION 06-14-11 | DATE PLOTTED => 17-AUG-2011 | TIME PLOTTED => 10:55

Dist	COUNTY	ROUTE	POST MILES TOTAL PROJECT	SHEET No.	TOTAL SHEETS
02	Sis	5	R50.9/R58.2	160	329

REGISTERED CIVIL ENGINEER 06-14-11 DATE

06-15-11
PLANS APPROVAL DATE

REGISTERED PROFESSIONAL ENGINEER TOBY J. CRAWFORD No. C71138 Exp. 6-30-13 CIVIL STATE OF CALIFORNIA

THE STATE OF CALIFORNIA OR ITS OFFICERS OR AGENTS SHALL NOT BE RESPONSIBLE FOR THE ACCURACY OR COMPLETENESS OF SCANNED COPIES OF THIS PLAN SHEET.

NOTE:

1. CALTRANS UTILITIES ARE NOT POSITIVELY LOCATED.

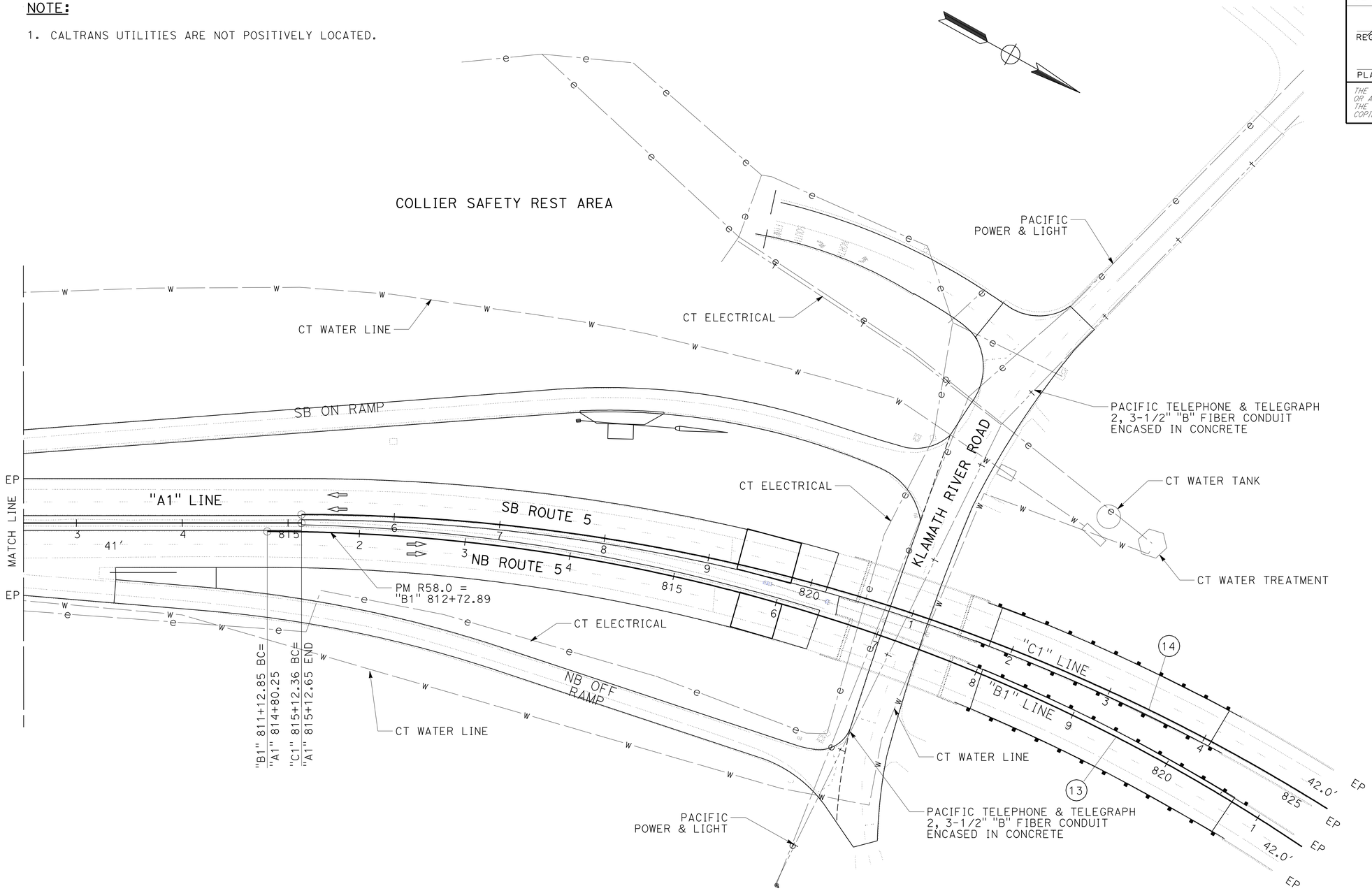

CURVE DATA

No. (#)	R	Δ	T	L
13	1750.01′	78°01′04"	1417.58′	2382.93′
14	1825.01′	77°53′52"	1475.17′	2481.24′

UTILITY PLAN

SCALE: 1" = 50′

U-2

REVISED BY	DATE REVISED
WILL LESLIE	TOBY CRAWFORD
CALCULATED-DESIGNED BY	CHECKED BY
FUNCTIONAL SUPERVISOR	STEVE TOPAL

STATE OF CALIFORNIA - DEPARTMENT OF TRANSPORTATION
Caltrans
DESIGN

P:\proj1\02\3E760_plans\pse\23e760ka002.dgn

LAST REVISION 06-14-11 | DATE PLOTTED => 17-AUG-2011 | TIME PLOTTED => 10:55

Dist	COUNTY	ROUTE	POST MILES TOTAL PROJECT	SHEET No.	TOTAL SHEETS
02	Sis	5	R50.9/R58.2	161	329

REGISTERED CIVIL ENGINEER 06-14-11 DATE

06-15-11
PLANS APPROVAL DATE

REGISTERED PROFESSIONAL ENGINEER TOBY J. CRAWFORD No. C71138 Exp. 6-30-13 CIVIL STATE OF CALIFORNIA

THE STATE OF CALIFORNIA OR ITS OFFICERS OR AGENTS SHALL NOT BE RESPONSIBLE FOR THE ACCURACY OR COMPLETENESS OF SCANNED COPIES OF THIS PLAN SHEET.

NOTES:

1. EXACT SIGN LOCATIONS TO BE DETERMINED BY THE ENGINEER.
2. EXISTING UTILITY FACILITIES HAVE NOT BEEN POSITIVELY LOCATED.
3. SIGNS SHOWN WITH (CA) INDICATE CALIFORNIA SIGN CODES, OTHERWISE FEDERAL SIGN CODES ARE SHOWN.

ABBREVIATIONS

PCMS PORTABLE CHANGEABLE MESSAGE SIGN

LEGEND

- SIGN (1 POST)
- SIGN (2 POST)
- PORTABLE CHANGEABLE MESSAGE SIGN
- CONE
- DIRECTION OF TRAVEL

CONSTRUCTION AREA SIGNS (STATIONARY MOUNTED)

TYPE	CODE	PANEL SIZE	SIGN MESSAGE	NUMBER AND SIZE OF POSTS	No. OF SIGNS
A	C11(CA) C23B(CA)	90" x 48" 54" x 24"	ROAD CONSTRUCTION NEXT 7 MILES PAVEMENT REPLACEMENT	2-4" x 6"	4
B	W20-1 C23B(CA)	48" x 48" 54" x 24"	ROAD WORK AHEAD PAVEMENT REPLACEMENT	1-4" x 6"	1
C	C14(CA)	48" x 24"	END ROAD WORK	1-4" x 6"	5
D	C40(CA)	108" x 42"	TRAFFIC FINES DOUBLED IN CONSTRUCTION ZONES	2-4" x 6"	2

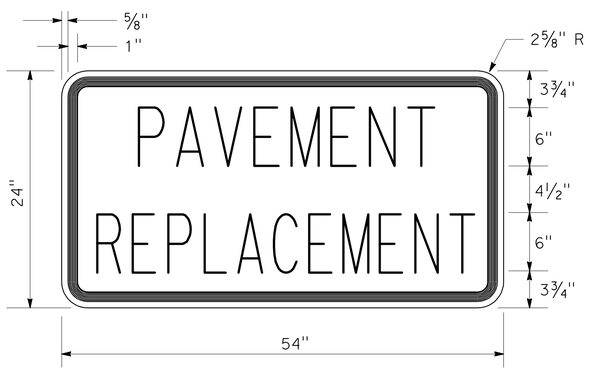

C23B(CA) SIGN PANEL DETAIL

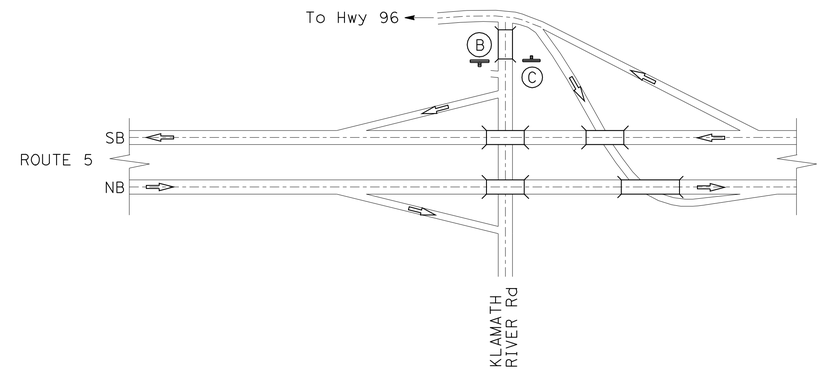

DETAIL A
ON-RAMP AND OFF-RAMP
CONSTRUCTION AREA SIGN LOCATIONS
KLAMATH RIVER ROAD UC - PM 58.12

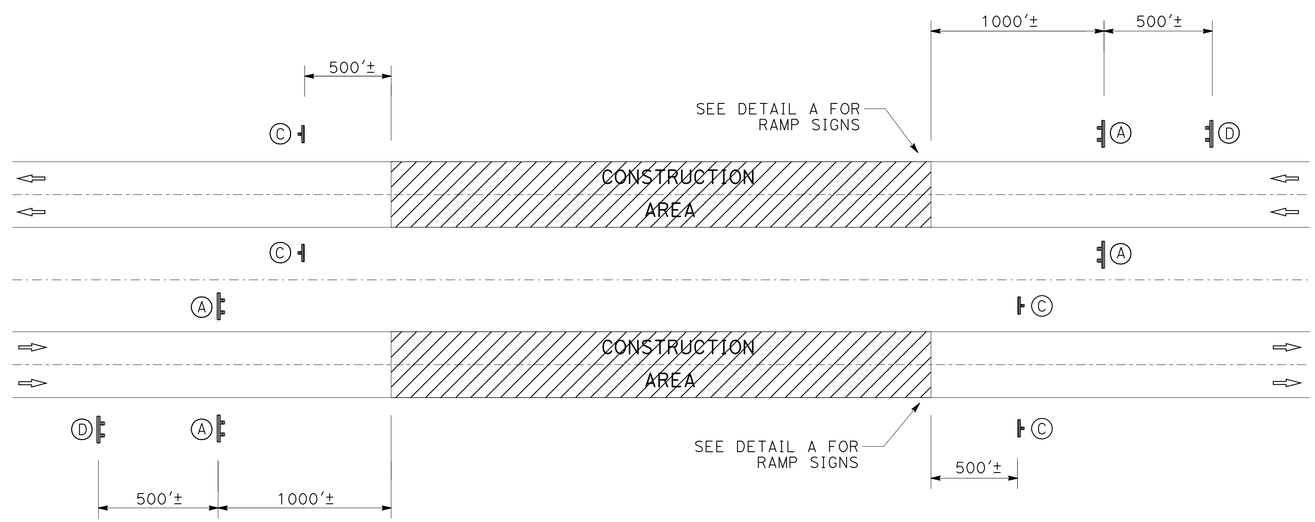

CONSTRUCTION AREA SIGNS

CONSTRUCTION AREA SIGNS
NO SCALE

CS-1

STATE OF CALIFORNIA - DEPARTMENT OF TRANSPORTATION
Caltrans® DESIGN
FUNCTIONAL SUPERVISOR: STEVE TOPAL
CALCULATED-DESIGNED BY: NICOLE MALLORY
CHECKED BY: TOBY CRAWFORD
REVISED BY / DATE REVISED

P:\proj1\02\3E760_plans\pse\23e7601a001.dgn

LAST REVISION 06-14-11
DATE PLOTTED => 17-AUG-2011
TIME PLOTTED => 10:55

Dist	COUNTY	ROUTE	POST MILES TOTAL PROJECT	SHEET No.	TOTAL SHEETS
02	Sis	5	R50.9/R58.2	162	329

Robert Weber 06-14-11
REGISTERED CIVIL ENGINEER DATE

06-15-11
PLANS APPROVAL DATE

REGISTERED PROFESSIONAL ENGINEER ROBERT WEBER No. C62511 Exp. 9-30-11 CIVIL STATE OF CALIFORNIA

THE STATE OF CALIFORNIA OR ITS OFFICERS OR AGENTS SHALL NOT BE RESPONSIBLE FOR THE ACCURACY OR COMPLETENESS OF SCANNED COPIES OF THIS PLAN SHEET.

STAGING OF MAJOR WORK

1A CONSTRUCT CROSSOVERS 1-3, REPLACE AC SURFACING ON SHOULDERS, RECONSTRUCT NB ROADWAY BETWEEN THE SHASTA RIVER BRIDGE (02-0148R) AND CROSSOVER 3.

1B CONSTRUCT CROSSOVER 4, REPLACE AC SURFACING ON SHOULDERS, RECONSTRUCT NB ROADWAY BETWEEN CROSSOVERS 3 AND 4.

1C CONSTRUCT CROSSOVER 5, REPLACE AC SURFACING ON SHOULDERS, RECONSTRUCT NB ROADWAY BETWEEN CROSSOVERS 4 AND 5.

2A RECONSTRUCT NB & SB No. 1 LANES AND MEDIAN SHOULDERS BETWEEN CROSSOVER 5 AND THE KLAMATH RIVER BRIDGE AND SEPARATION (02-0134R/L).

2B RECONSTRUCT NB & SB No. 2 LANES AND OUTSIDE SHOULDERS BETWEEN CROSSOVER 5 AND THE KLAMATH RIVER BRIDGE AND SEPARATION (02-0134R/L), OVERLAY NB AND SB RAMPS.

3A RECONSTRUCT SB ROADWAY BETWEEN CROSSOVERS 4 AND 5.

3B RECONSTRUCT SB ROADWAY BETWEEN CROSSOVERS 3 AND 4.

3C RECONSTRUCT SB ROADWAY BETWEEN THE SHASTA RIVER BRIDGE (02-0148L) AND CROSSOVER 3.

4A REMOVE CROSSOVERS 1-5; CONSTRUCT MEDIAN BARRIER AND MEDIAN SHOULDERS AT CROSSOVERS 3, 4 AND 5.

4B PAVE KLAMATH RIVER ROAD. PLACE FINAL PAVEMENT DELINEATION AND FINISH REMAINING WORK.

INDEX OF STAGE CONSTRUCTION, TRAFFIC HANDLING AND DETOUR PLAN SHEETS:

SC-3	STAGES 1A-1C LOCATION SCHEMATIC; SECTION VIEW OF WORK AND TRAFFIC HANDLING DURING CONSTRUCTION OF CROSSOVERS
SC-4	STAGES 1A-1C LOCATION SCHEMATIC; SECTION VIEW OF WORK AND TRAFFIC HANDLING DURING REPLACEMENT OF AC SURFACING ON OUTSIDE AND MEDIAN SHOULDERS
SC-5	STAGE 1A LOCATION SCHEMATIC; SECTION VIEW OF TRAFFIC HANDLING ON SHASTA RIVER BRIDGE, (02-148L) DURING THE FIRST CONSTRUCTION SEASON
SC-6	STAGE 1B LOCATION SCHEMATIC; SECTION VIEW OF WORK AND TRAFFIC HANDLING FOR STAGES 1A-1C
SC-7	STAGE 1C LOCATION SCHEMATIC; SECTION VIEW OF INTERSTAGE STRIPING FOR STAGES 1A-3C ON NB AND SB LANES
SC-8	STAGE 2A LOCATION SCHEMATIC; SECTION VIEW OF WORK AND TRAFFIC HANDLING
SC-9	STAGE 2A - PCC PLACEMENT, NB ROADWAY LOCATION SCHEMATIC; SECTION VIEW OF WORK AND TRAFFIC HANDLING DURING PLACEMENT OF PCC PAVEMENT
SC-10	STAGE 2A - PCC PLACEMENT, SB ROADWAY LOCATION SCHEMATIC; SECTION VIEW OF WORK AND TRAFFIC HANDLING DURING PLACEMENT OF PCC PAVEMENT
SC-11	STAGE 2B LOCATON SCHEMATIC; SECTION VIEW OF WORK AND TRAFFIC HANDLING
SC-12	STAGE 2B - PCC PLACEMENT, NB FREEWAY LOCATION SCHEMATIC; SECTION VIEW OF WORK AND TRAFFIC HANDLING DURING PLACEMENT OF PCC PAVEMENT
SC-13	STAGE 2B - PCC PLACEMENT, SB FREEWAY LOCATION SCHEMATIC; SECTION VIEW OF WORK AND TRAFFIC HANDLING DURING PLACMENT OF PCC PAVEMENT
SC-14	STAGE 3A LOCATION SCHEMATIC; SECTION VIEW OF WORK AND TRAFFIC HANDLING FOR STAGES 3A-3C
SC-15	STAGE 3B LOCATION SCHEMATIC; SECTION VIEW OF WORK AND TRAFFIC HANDLING FOR MEDIAN BARRIER WORK THAT MAY OCCUR DURING STAGES 1A-1C OR 3A-3C.
SC-16	STAGE 3C LOCATION SCHEMATIC; SECTION VIEW OF TRAFFIC HANDLING ON SHASTA RIVER BRIDGE, (02-148R).
SC-17	STAGES 4A, 4B LOCATION SCHEMATICS OF WORK AND TRAFFIC HANDLING.
SC-18	STAGES 1A-3C TRAFFIC HANDLING PLAN SPEED ZONE REDUCTION SIGNING
SC-19	STAGES 1A-3C TRAFFIC HANDLING PLAN TYPICAL LANE CLOSURE
SCD-1	STAGES 1A, 1B TYPICAL SECTIONS, CROSSOVERS 1 AND 2
SCD-2	STAGE 1A TYPICAL SECTIONS, CROSSOVER 3
SCD-3	STAGE 1A TYPICAL SECTIONS, CROSSOVER 3
SCD-4	STAGE 1A TYPICAL SECTIONS, CROSSOVER 3
SCD-5	STAGE 1B TYPICAL SECTIONS, CROSSOVER 4
SCD-6	STAGE 1C TYPICAL SECTIONS, CROSSOVER 5
SCD-7	STAGE 1C TYPICAL SECTIONS, CROSSOVER 5
SCD-8	STAGE 1A FLOW LINE ELEVATIONS, CROSSOVER 3
SCD-9	STAGE 1C FLOW LINE ELEVATIONS, CROSSOVER 5
SCD-10	STAGES 1A-3C TYPICAL CONDITIONS Temp TRANSVERSE Const JOINT CONFORM CROSSOVER TO NEW CRCP
SCD-11	STAGES 1A-3C DETAILS, Temp TRANSVERSE Const JOINT CONFORM CROSSOVER TO NEW CRCP
SCD-12	STAGES 1A-1C DETAIL OF CROSSOVER 1.
SCD-13	STAGE 3C DETAIL OF CROSSOVER 1.
SCD-14	STAGE 1B-1C DETAIL OF CROSSOVER 2.
SCD-15	STAGE 1A DETAIL OF CROSSOVER 3
SCD-16	STAGE 1B DETAIL OF CROSSOVER 3
SCD-17	STAGE 3B DETAIL OF CROSSOVER 3
SCD-18	STAGE 3C DETAIL OF CROSSOVER 3

STAGE CONSTRUCTION AND TRAFFIC HANDLING PLAN

SC-1

REVISED BY: R. WEBER — DATE REVISED: 06-04-11
CALCULATED-DESIGNED BY: ROBERT WEBER — CHECKED BY: ROBERT REGINATO
FUNCTIONAL SUPERVISOR: STEVE TOPAL

STATE OF CALIFORNIA - DEPARTMENT OF TRANSPORTATION
Caltrans® DESIGN

P:\proj1\02\3E760_plans\pse\23e760ma001.dgn

Dist	COUNTY	ROUTE	POST MILES TOTAL PROJECT	SHEET No.	TOTAL SHEETS
02	Sis	5	R50.9/R58.2	163	329

Robert Weber 06-14-11
REGISTERED CIVIL ENGINEER DATE

06-15-11
PLANS APPROVAL DATE

REGISTERED PROFESSIONAL ENGINEER
ROBERT WEBER
No. C62511
Exp. 9-30-11
CIVIL
STATE OF CALIFORNIA

THE STATE OF CALIFORNIA OR ITS OFFICERS OR AGENTS SHALL NOT BE RESPONSIBLE FOR THE ACCURACY OR COMPLETENESS OF SCANNED COPIES OF THIS PLAN SHEET.

INDEX OF STAGE CONSTRUCTION, TRAFFIC HANDLING AND DETOUR PLAN SHEETS:

SCD-19	STAGE 1B DETAIL OF CROSSOVER 4
SCD-20	STAGE 1C DETAIL OF CROSSOVER 4
SCD-21	STAGE 3A DETAIL OF CROSSOVER 4
SCD-22	STAGE 3B DETAIL OF CROSSOVER 4
SCD-23	STAGE 1C DETAIL OF CROSSOVER 5
SCD-24	STAGE 1C DETAIL OF CROSSOVER 5
SCD-25	STAGE 3A DETAIL OF CROSSOVER 5
SCD-26	STAGE 3A DETAIL OF CROSSOVER 5
SCD-27	STAGE 2A DETAIL OF TRAFFIC HANDLING
SCD-28	STAGE 2A DETAIL OF TRAFFIC HANDLING
SCD-29	STAGE 2A DETAIL OF TRAFFIC HANDLING
SCD-30	STAGE 2B DETAIL OF TRAFFIC HANDLING
SCD-31	STAGE 2B DETAIL OF TRAFFIC HANDLING
SCD-32	STAGE 2B DETAIL OF TRAFFIC HANDLING
SCD-33	STAGES 1A-3C MISCELLANEOUS CRASH CUSHION LOCATIONS
SCQ-1	STAGES 1A, 1B TRAFFIC HANDLING QUANTITIES
SCQ-2	STAGES 1C, 2A TRAFFIC HANDLING QUANTITIES
SCQ-3	STAGES 2B, 3A TRAFFIC HANDLING QUANTITIES
SCQ-4	STAGES 3B, 3C TRAFFIC HANDLING QUANTITIES
SCQ-5	STAGES 1A-4B STAGE CONSTRUCTION QUANTITIES
DE-1	STAGES 2A-2B DETOUR PLAN, CLOSURE OF NB AND SB ROUTE 5 DURING PCC PAVING
DE-2	STAGE 2B DETOUR PLAN, CLOSURE OF NB AND SB RAMPS AT EXIT 786
DE-3	STAGES 1A-3C DETOUR PLAN INCIDENT CLOSURE OF NB ROUTE 5
DE-4	STAGES 1A-3C DETOUR PLAN INCIDENT CLOSURE OF SB ROUTE 5

STAGE CONSTRUCTION AND TRAFFIC HANDLING PLAN

SC-2

REVISED BY	R. WEBER
DATE REVISED	06-01-11
CALCULATED-DESIGNED BY	ROBERT WEBER
CHECKED BY	ROBERT REGINATO
FUNCTIONAL SUPERVISOR	STEVE TOPAL

STATE OF CALIFORNIA - DEPARTMENT OF TRANSPORTATION
Caltrans
DESIGN

P:\proj1\02\3E760_plans\pse\23e760ma002.dgn

LAST REVISION 06-14-11
DATE PLOTTED => 17-AUG-2011
TIME PLOTTED => 10:55

Dist	COUNTY	ROUTE	POST MILES TOTAL PROJECT	SHEET No.	TOTAL SHEETS
02	Sis	5	R50.9/R58.2	164	329

Robert Weber 06-14-11
REGISTERED CIVIL ENGINEER DATE

06-15-11
PLANS APPROVAL DATE

REGISTERED PROFESSIONAL ENGINEER ROBERT WEBER No. C62511 Exp. 9-30-11 CIVIL STATE OF CALIFORNIA

THE STATE OF CALIFORNIA OR ITS OFFICERS OR AGENTS SHALL NOT BE RESPONSIBLE FOR THE ACCURACY OR COMPLETENESS OF SCANNED COPIES OF THIS PLAN SHEET.

NOTES:

1. SEE STAGE CONSTRUCTION AND TRAFFIC HANDLING DETAILS FOR ADDITIONAL INFORMATION.
2. POST MILE AND STATIONING DATA GIVEN AT CROSSOVERS ARE TO THE APPROXIMATE CENTER.
3. WHEN CROSSOVERS 3-5 ARE NOT BEING USED TO SHIFT TRAFFIC, TEMPORARY RAILING (TYPE K) SHALL BE PLACED TO CREATE A SAFETY BARRIER BETWEEN THE NB AND SB LANES.

LEGEND:

- BRIDGE DECK AND APPROACH SLAB (NO WORK)
- XXX CLOSURE
- LANE CLOSURE
- WORK AREA

ABBREVIATIONS:

Bking	BACKING
CJ	CONSTRUCTION JOINT

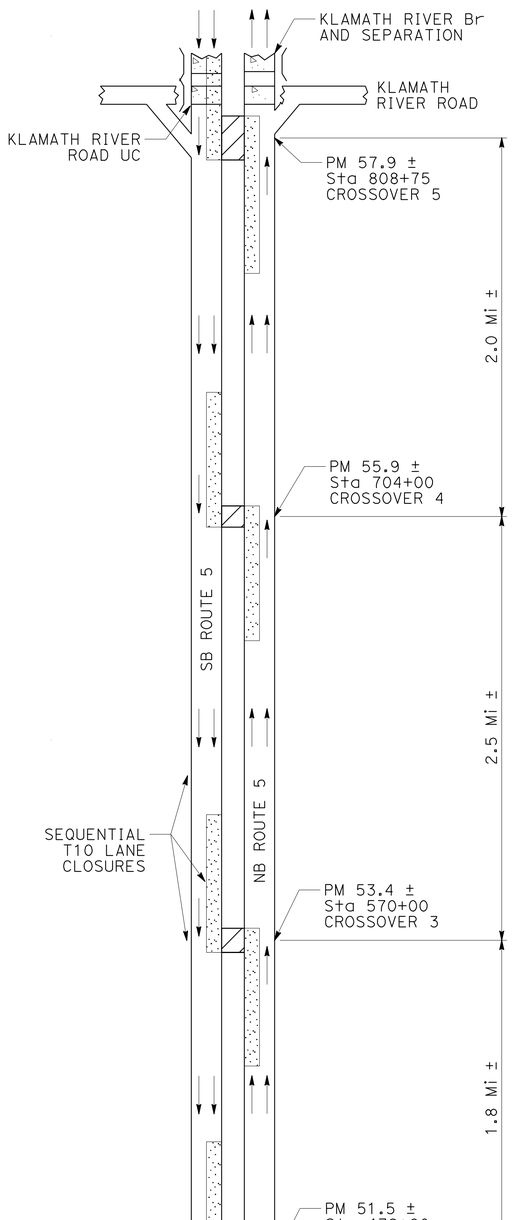

MEDIAN CROSSOVERS
LOCATION AND TRAFFIC HANDLING

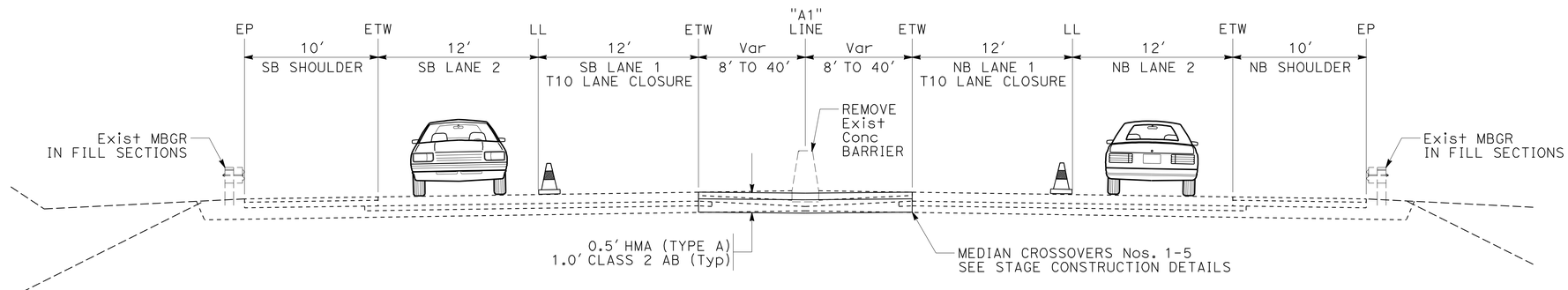

MEDIAN CROSSOVERS
STAGES 1A-1C

CONSTRUCTION AND TRAFFIC HANDLING
"A1" 442+00 TO "A1" 813+50

MEDIAN CROSSOVERS

CROSSOVER NUMBER	STATION RANGE	UTILIZATION					
		STAGE 1A	STAGE 1B	STAGE 1C	STAGE 3A	STAGE 3B	STAGE 3C
1	"A1" 442+00 TO 451+50	X	X				X
2	"A1" 466+00 TO 474+51		X				
3	"A1" 567+75 TO 572+00	X	X			X	X
4	"A1" 700+00 TO 708+00		X	X	X	X	
5	"A1" 802+75 TO 813+50			X	X		

THIS PLAN ACCURATE FOR STAGE CONSTRUCTION AND TRAFFIC HANDLING WORK ONLY

STAGE CONSTRUCTION AND TRAFFIC HANDLING PLAN
NO SCALE

SC-3

REVISED BY	R. WEBER
DATE REVISED	06-07-11
CALCULATED-DESIGNED BY	ROBERT WEBER
CHECKED BY	ROBERT REGINATO
FUNCTIONAL SUPERVISOR	STEVE TOPAL

STATE OF CALIFORNIA - DEPARTMENT OF TRANSPORTATION
Caltrans DESIGN

P:\proj1\02\3E760_plans\pse\23e760ma003.dgn

LAST REVISION 06-14-11 | DATE PLOTTED => 17-AUG-2011 | TIME PLOTTED => 10:55

Dist	COUNTY	ROUTE	POST MILES TOTAL PROJECT	SHEET No.	TOTAL SHEETS
02	Sis	5	R50.9/R58.2	165	329

Robert Weber 06-14-11
REGISTERED CIVIL ENGINEER DATE

06-15-11
PLANS APPROVAL DATE

REGISTERED PROFESSIONAL ENGINEER ROBERT WEBER No. C62511 Exp. 9-30-11 CIVIL STATE OF CALIFORNIA

THE STATE OF CALIFORNIA OR ITS OFFICERS OR AGENTS SHALL NOT BE RESPONSIBLE FOR THE ACCURACY OR COMPLETENESS OF SCANNED COPIES OF THIS PLAN SHEET.

NOTE:

1. REPLACE AC SURFACING ON MEDIAN SHOULDERS DURING CONSTRUCTION OF CROSSOVERS.

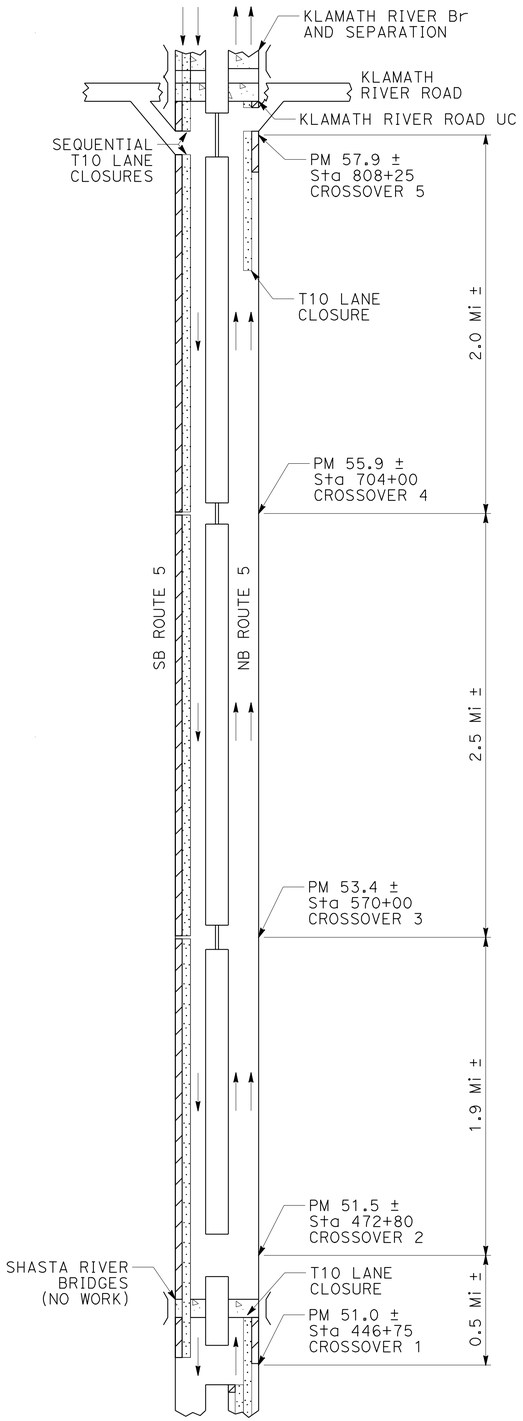

REPLACE AC SURFACING
LOCATION AND TRAFFIC HANDLING

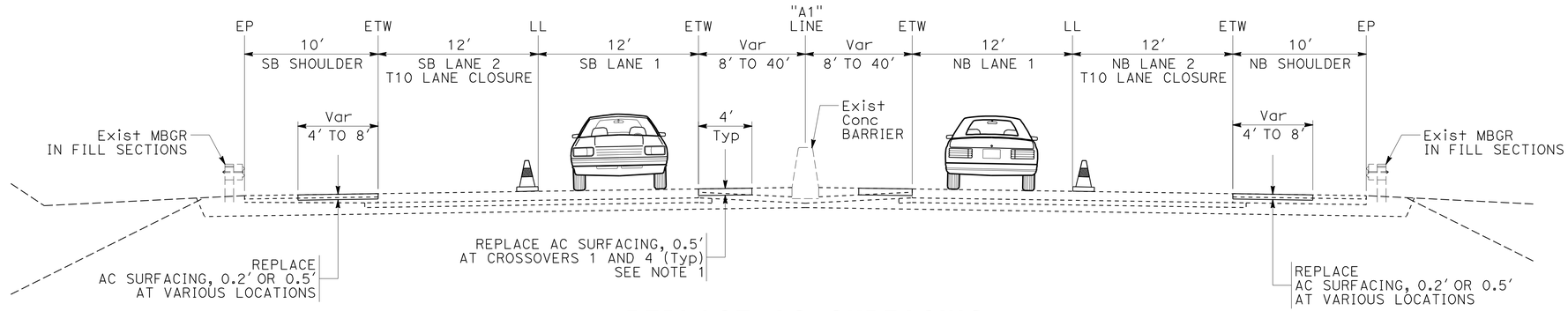

REPLACE AC SURFACING STAGES 1A-1C
CONSTRUCTION AND TRAFFIC HANDLING
"A1" 440+00 TO "B1" 820+71, "C1" 820+45

REPLACE AC SURFACING

STAGE	STATION RANGE	NORTHBOUND	SOUTHBOUND	OUTSIDE SHOULDER	MEDIAN SHOULDER	LENGTH	WIDTH	DEPTH
						FT	FT	FT
1A	"A1" 440+00 TO 442+00				X	203	4	0.5
1A	"A1" 446+50 TO 453+94	X		X		744	4	0.2
1A	"A1" 446+50 TO 454+12		X	X		762	4	0.2
1A	"A1" 461+00 TO 480+00		X	X		1980	6	0.5
1A	"A1" 491+00 TO 500+25		X	X		914	6	0.5
1A	"A1" 504+50 TO 604+00		X	X		9980	6	0.5
1B	"A1" 604+00 TO 708+00		X	X		10,400	6	0.5
1B	"A1" 700+00 TO 701+00		X		X	100	4	0.5
1B	"A1" 707+00 TO 708+00	X			X	100	4	0.5
1B	"A1" 708+00 TO 798+00		X	X		8980	6	0.5
1C	"A1" 798+00 TO 801+00		X	X		293	4	0.5
1C	"A1" 800+00 TO 809+00	X		X		911	8	0.5
1C	"A1" 810+12 TO "C1" 820+45		X	X		1045	8	0.5
1C	"A1" 813+20 TO "B1" 816+71	X		X		711	8	0.5

THIS PLAN ACCURATE FOR STAGE CONSTRUCTION AND TRAFFIC HANDLING WORK ONLY

STAGE CONSTRUCTION AND TRAFFIC HANDLING PLAN
NO SCALE

SC-4

REVISED BY	DATE REVISED
R. WEBER	06-07-11

CALCULATED-DESIGNED BY: ROBERT WEBER
CHECKED BY: ROBERT REGINATO
FUNCTIONAL SUPERVISOR: STEVE TOPAL

STATE OF CALIFORNIA - DEPARTMENT OF TRANSPORTATION
Caltrans
DESIGN

P:\proj1\02\3E760_plans\pse\23e760ma004.dgn

LAST REVISION OG-14-11 | DATE PLOTTED => 17-AUG-2011 | TIME PLOTTED => 10:55

Dist	COUNTY	ROUTE	POST MILES TOTAL PROJECT	SHEET No.	TOTAL SHEETS
02	Sis	5	R50.9/R58.2	166	329

Robert Weber 06-14-11
REGISTERED CIVIL ENGINEER DATE

06-15-11
PLANS APPROVAL DATE

REGISTERED PROFESSIONAL ENGINEER ROBERT WEBER No. C62511 Exp. 9-30-11 CIVIL STATE OF CALIFORNIA

THE STATE OF CALIFORNIA OR ITS OFFICERS OR AGENTS SHALL NOT BE RESPONSIBLE FOR THE ACCURACY OR COMPLETENESS OF SCANNED COPIES OF THIS PLAN SHEET.

NOTES:

1. LOCATIONS OF THE VARIOUS CONSTRUCTION AREA SPEED ZONE REDUCTIONS ARE NOT SHOWN.
2. THE TRAFFIC SHIFT SHOWN AT CROSSOVER 1 DURING STAGES 1A AND 1B, MAY NEED TO BE MAINTAINED DURING THE ENTIRE FIRST CONSTRUCTION SEASON, AS DIRECTED BY THE ENGINEER. THIS WILL ENABLE THE SHASTA RIVER BRIDGES DECK REPLACEMENT PROJECT (02-3c920) TO PROCEED WITH WORK ON THE DECK OF SHASTA RIVER BRIDGE (02-0148R), DURING THE 2012 CONSTRUCTION SEASON.
3. WORK ON THE DECK OF SHASTA RIVER BRIDGE, (02-0148R) IS NOT CURRENTLY EXPECTED TO TAKE PLACE UNTIL THE 2013 CONSTRUCTION SEASON.

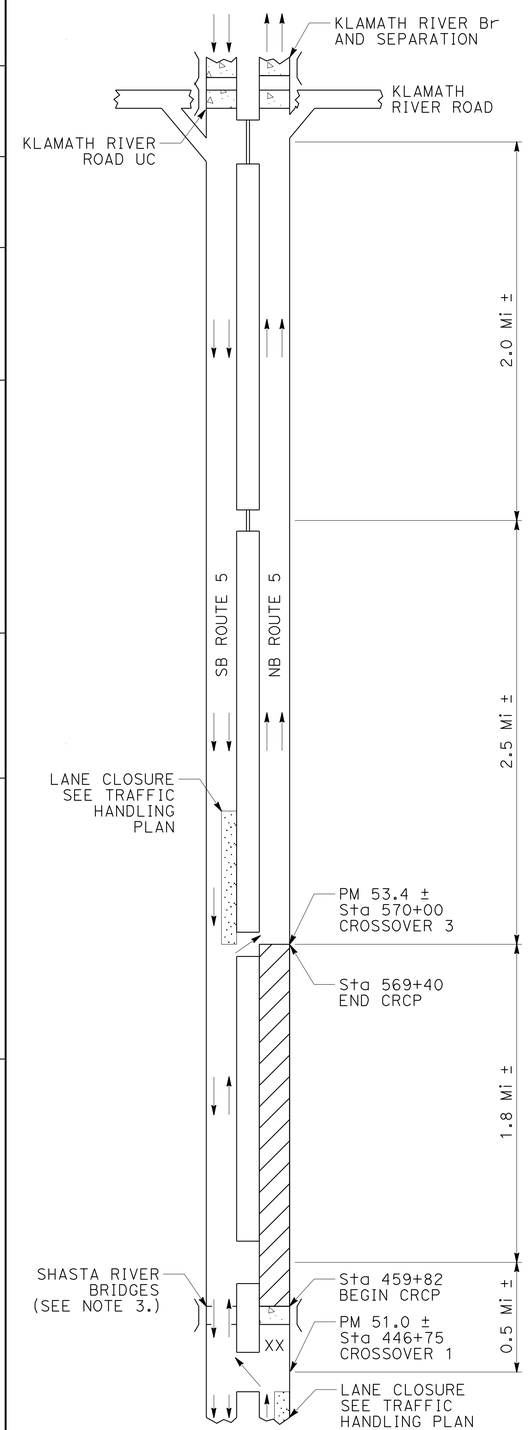

NB ROADWAY STAGE 1A
WORK LOCATION AND TRAFFIC HANDLING

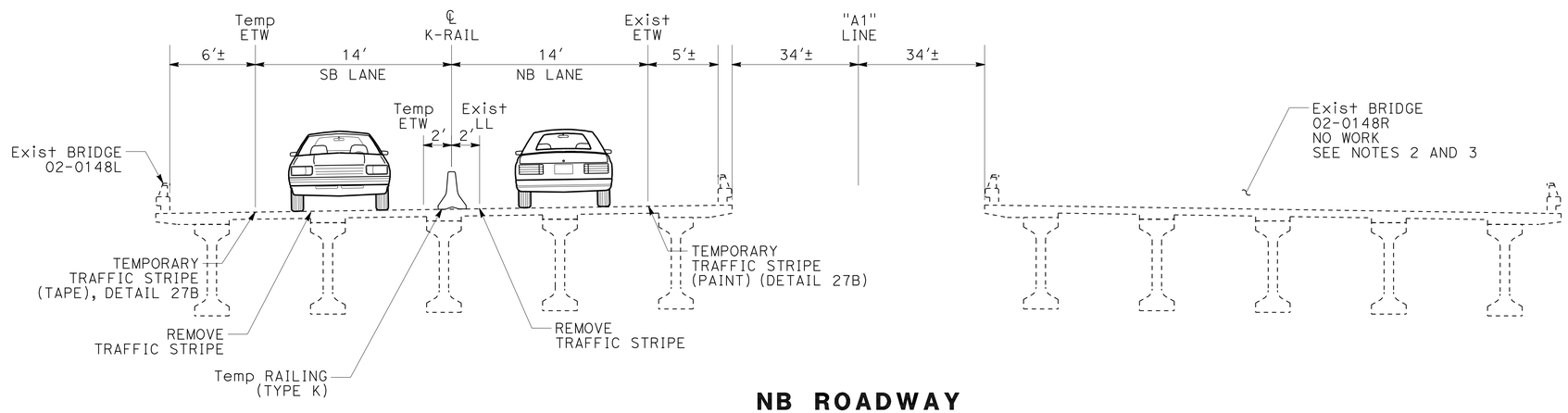

NB ROADWAY STAGE 1A
TRAFFIC HANDLING AT SHASTA RIVER BRIDGES
"A1" 454+41 TO "A1" 459+71

NB ROADWAY STAGE 1A

DIRECTION	STATION RANGE	CONSTRUCTION AREA SPEED ZONE REDUCTION	LANE CLOSURE	CROSSOVERS (1-3)	ROADWAY WORK
NB	"A1" 371+00 TO 405+00	X			
NB	"A1" 405+00 TO 440+00		X		
SB	"A1" 440+00 TO 573+30			X	
NB	"A1" 459+82 TO 569+40				X
SB	"A1" 568+00 TO 606+50		X		
SB	"A1" 606+50 TO 641+00	X			

THIS PLAN ACCURATE FOR STAGE CONSTRUCTION AND TRAFFIC HANDLING WORK ONLY

STAGE CONSTRUCTION AND TRAFFIC HANDLING PLAN
NO SCALE

SC-5

CALCULATED-DESIGNED BY	CHECKED BY	REVISED BY	DATE REVISED	FUNCTIONAL SUPERVISOR
ROBERT WEBER	ROBERT REGINATO	R. WEBER	06-07-11	STEVE TOPAL

STATE OF CALIFORNIA - DEPARTMENT OF TRANSPORTATION
Caltrans® DESIGN

P:\proj\02\3E760_plans\pse\23e760ma005.dgn

LAST REVISION 06-14-11 DATE PLOTTED => 17-AUG-2011 TIME PLOTTED => 10:56

Dist	COUNTY	ROUTE	POST MILES TOTAL PROJECT	SHEET No.	TOTAL SHEETS
02	Sis	5	R50.9/R58.2	167	329

Robert Weber 06-14-11
REGISTERED CIVIL ENGINEER DATE

06-15-11
PLANS APPROVAL DATE

REGISTERED PROFESSIONAL ENGINEER ROBERT WEBER No. C62511 Exp. 9-30-11 CIVIL STATE OF CALIFORNIA

THE STATE OF CALIFORNIA OR ITS OFFICERS OR AGENTS SHALL NOT BE RESPONSIBLE FOR THE ACCURACY OR COMPLETENESS OF SCANNED COPIES OF THIS PLAN SHEET.

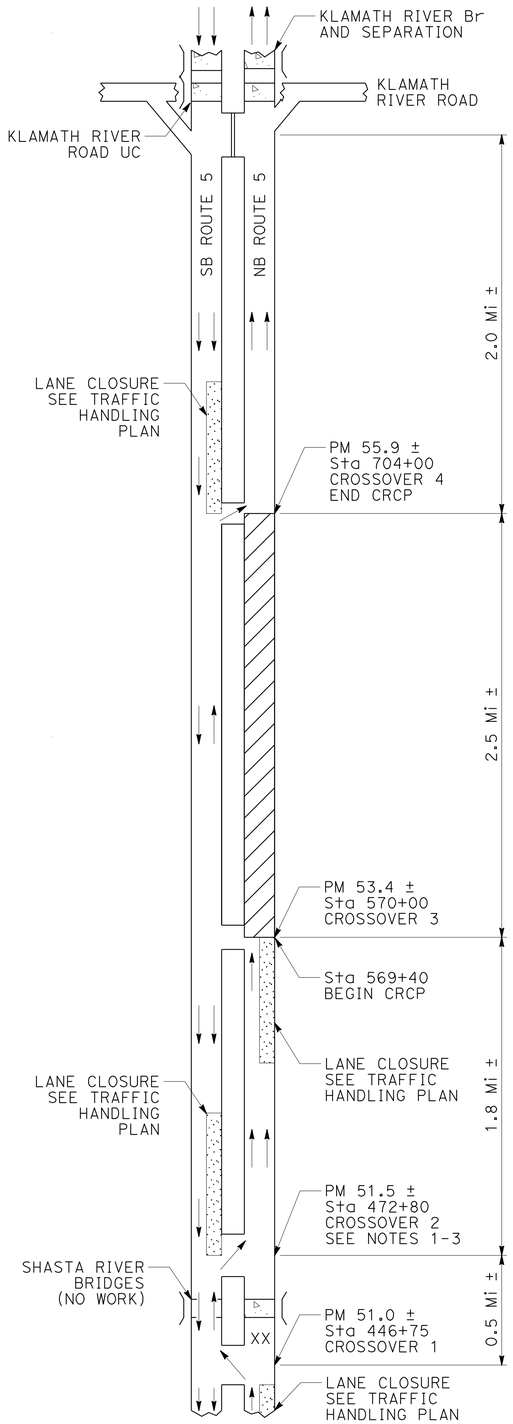

NB ROADWAY STAGE 1B

WORK LOCATION AND TRAFFIC HANDLING

NOTES:

1. THE TRAFFIC SHIFT SHOWN AT CROSSOVER 2 DURING STAGES 1B AND 1C, WILL NOT NEED TO BE IMPLEMENTED DURING THE FIRST CONSTRUCTION SEASON, UNLESS DIRECTED BY THE ENGINEER.
2. CROSSOVER 2 WILL ONLY BE USED IF WORK ON THE DECK OF THE NB SHASTA RIVER BRIDGE (02-0148R) IS PROCEEDING DURING THE 2012 CONSTRUCTION SEASON.
3. IF THE NB SHASTA RIVER BRIDGE IS CLOSED, NB ROUTE 5 WILL HAVE TO BE CLOSED TO SET UP CROSSOVER 2, USE NB ROUTE 5 INCIDENT CLOSURE DETOUR. SEE DETOUR PLANS.

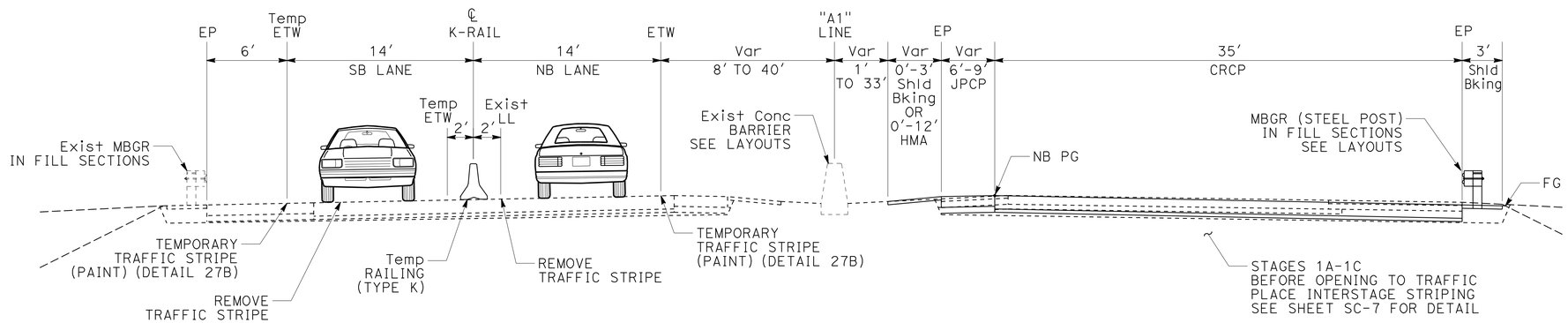

NB ROADWAY STAGES 1A-1C

CONSTRUCTION AND TRAFFIC HANDLING
"A1" 559+82 TO "A1" 806+50

NB ROADWAY STAGE 1B

DIRECTION	STATION RANGE	CONSTRUCTION AREA SPEED ZONE REDUCTION	LANE CLOSURE	CROSSOVERS (1-2)	CROSSOVERS (3-4)	ROADWAY WORK
SB	"A1" 466+00 TO 479+60			X		
SB	"A1" 467+00 TO 505+50		X			
SB	"A1" 505+50 TO 540+00	X				
NB	"A1" 531+00 TO 566+25		X			
SB	"A1" 566+25 TO 708+00				X	
NB	"A1" 569+40 TO 704+00					X
SB	"A1" 704+00 TO 742+50		X			
SB	"A1" 742+50 TO 777+00	X				

THIS PLAN ACCURATE FOR STAGE CONSTRUCTION AND TRAFFIC HANDLING WORK ONLY

STAGE CONSTRUCTION AND TRAFFIC HANDLING PLAN

NO SCALE

SC-6

REVISED BY	DATE REVISED
R. WEBER	06-07-11

CALCULATED-DESIGNED BY: ROBERT WEBER
CHECKED BY: ROBERT REGINATO
FUNCTIONAL SUPERVISOR: STEVE TOPAL

STATE OF CALIFORNIA - DEPARTMENT OF TRANSPORTATION
Caltrans® DESIGN

P:\proj1\02\3E760_plans\pse\23e760ma006.dgn

LAST REVISION 06-14-11 | DATE PLOTTED => 17-AUG-2011 | TIME PLOTTED => 10:56

Dist	COUNTY	ROUTE	POST MILES TOTAL PROJECT	SHEET No.	TOTAL SHEETS
02	Sis	5	R50.9/R58.2	168	329

Robert Weber 06-14-11
REGISTERED CIVIL ENGINEER DATE

06-15-11
PLANS APPROVAL DATE

REGISTERED PROFESSIONAL ENGINEER ROBERT WEBER No. C62511 Exp. 9-30-11 CIVIL STATE OF CALIFORNIA

THE STATE OF CALIFORNIA OR ITS OFFICERS OR AGENTS SHALL NOT BE RESPONSIBLE FOR THE ACCURACY OR COMPLETENESS OF SCANNED COPIES OF THIS PLAN SHEET.

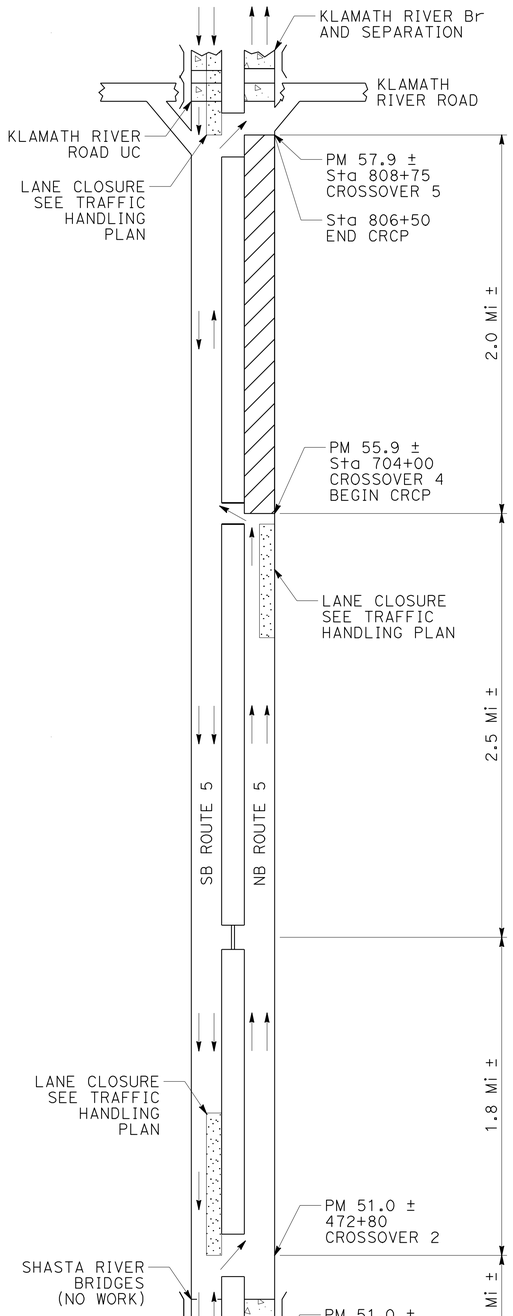

NB ROADWAY STAGE 1C

WORK LOCATION AND TRAFFIC HANDLING

NOTES:

1. THE INTERSTAGE STRIPING LAYOUT IS IDENTICAL TO THAT OF THE FINAL STRIPING. SEE PAVEMENT DELINEATION PLANS.
2. INTERSTAGE STRIPING IS PROVIDED TO ALLOW ONE-WAY TRAFFIC ON THE NB AND SB ROADWAYS TO BE REESTABLISHED AT THE END OF EACH STAGE.

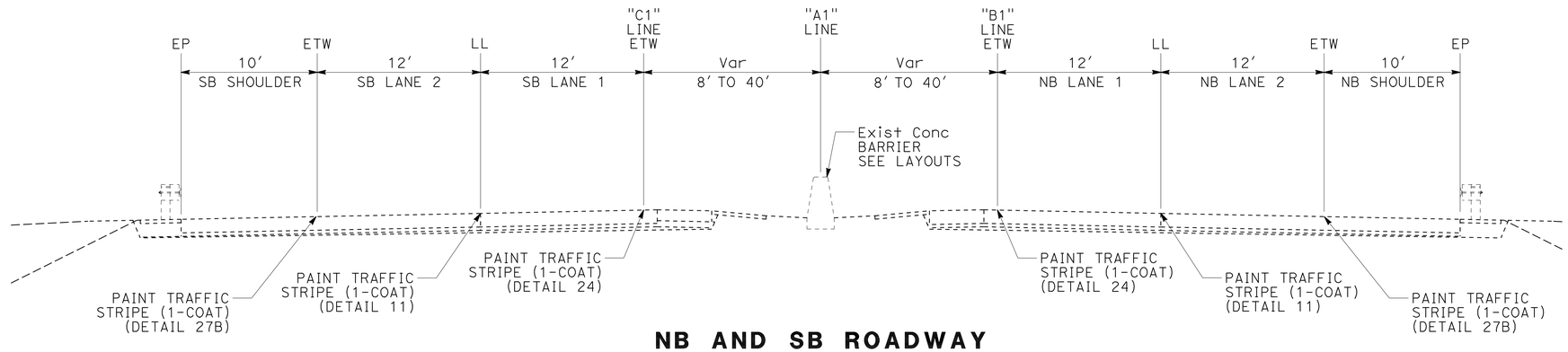

NB AND SB ROADWAY STAGES 1A-3C

INTERSTAGE STRIPING
"A1" 440+00 TO "B1" 825+00, "C1" 829+00

NB ROADWAY STAGE 1C

DIRECTION	STATION RANGE	CONSTRUCTION AREA SPEED ZONE REDUCTION	LANE CLOSURE	CROSSOVERS (4-5)	ROADWAY WORK
NB	"A1" 631+00 TO 665+00	X			
NB	"A1" 665+00 TO 699+00		X		
SB	"A1" 699+00 TO 814+00			X	
NB	"A1" 704+00 TO 806+50				X
SB	"A1" 812+50 TO "C1" 847+50		X		
SB	"C1" 847+50 TO 881+50	X			

THIS PLAN ACCURATE FOR STAGE CONSTRUCTION AND TRAFFIC HANDLING WORK ONLY

STAGE CONSTRUCTION AND TRAFFIC HANDLING PLAN

NO SCALE

SC-7

REVISED BY	DATE REVISED
R. WEBER	05-08-11

CALCULATED-DESIGNED BY: ROBERT WEBER
CHECKED BY: ROBERT REGINATO
FUNCTIONAL SUPERVISOR: STEVE TOPAL

STATE OF CALIFORNIA - DEPARTMENT OF TRANSPORTATION
Caltrans DESIGN

P:\proj1\02\3E760_plans\pse\23e760ma007.dgn

LAST REVISION 06-14-11 | DATE PLOTTED => 17-AUG-2011 | TIME PLOTTED => 10:56

Dist	COUNTY	ROUTE	POST MILES TOTAL PROJECT	SHEET No.	TOTAL SHEETS
02	Sis	5	R50.9/R58.2	169	329

Robert Weber 06-14-11
REGISTERED CIVIL ENGINEER DATE

06-15-11
PLANS APPROVAL DATE

REGISTERED PROFESSIONAL ENGINEER ROBERT WEBER No. C62511 Exp. 9-30-11 CIVIL STATE OF CALIFORNIA

THE STATE OF CALIFORNIA OR ITS OFFICERS OR AGENTS SHALL NOT BE RESPONSIBLE FOR THE ACCURACY OR COMPLETENESS OF SCANNED COPIES OF THIS PLAN SHEET.

NOTES:

1. EXISTING MEDIAN BARRIER BETWEEN "A1" 803+00 AND 813+50 WILL BE REMOVED DURING CONSTRUCTION OF CROSSOVER 5. THAT PORTION OF THE BARRIER BETWEEN "A1" 813+50 AND "C1" 820+30 WILL REMAIN IN PLACE.
2. LINES "B1" AND "C1" START AT "A1" 814+80.25 AND 815+12.65 RESPECTIVELY. AT THESE POINTS, THE NB AND SB PROFILE GRADE LINES MOVE FROM THE EDGE OF THE CRCP ADJACENT TO THE MEDIAN TO THE "B" AND "C" ALIGNMENTS, WHICH TRACK THE ETW.

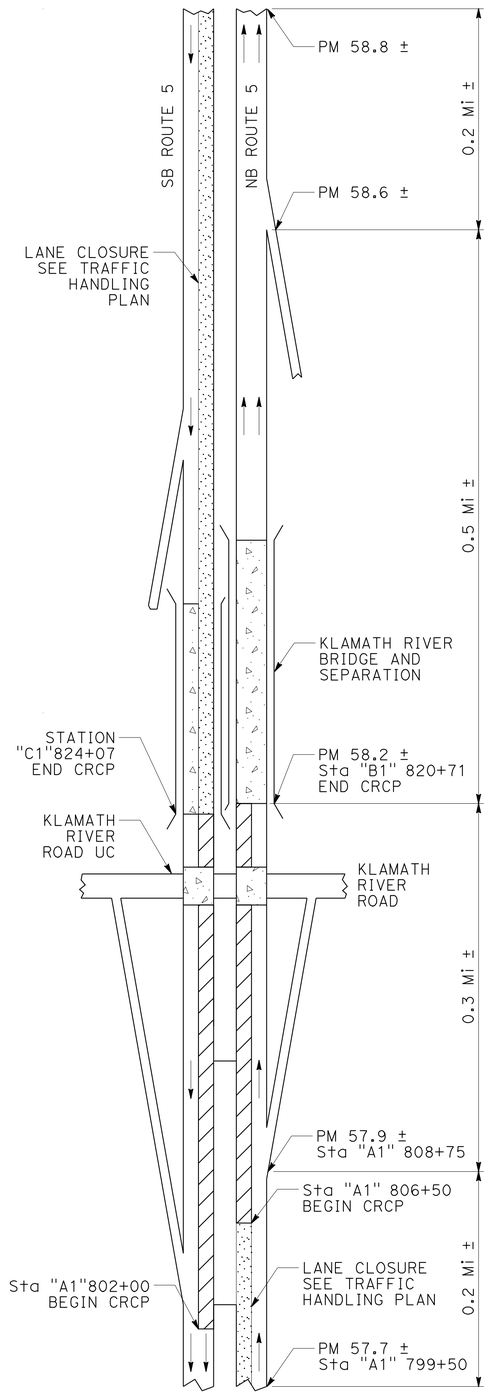

NB/SB Rdwy STAGE 2A

WORK LOCATION AND TRAFFIC HANDLING

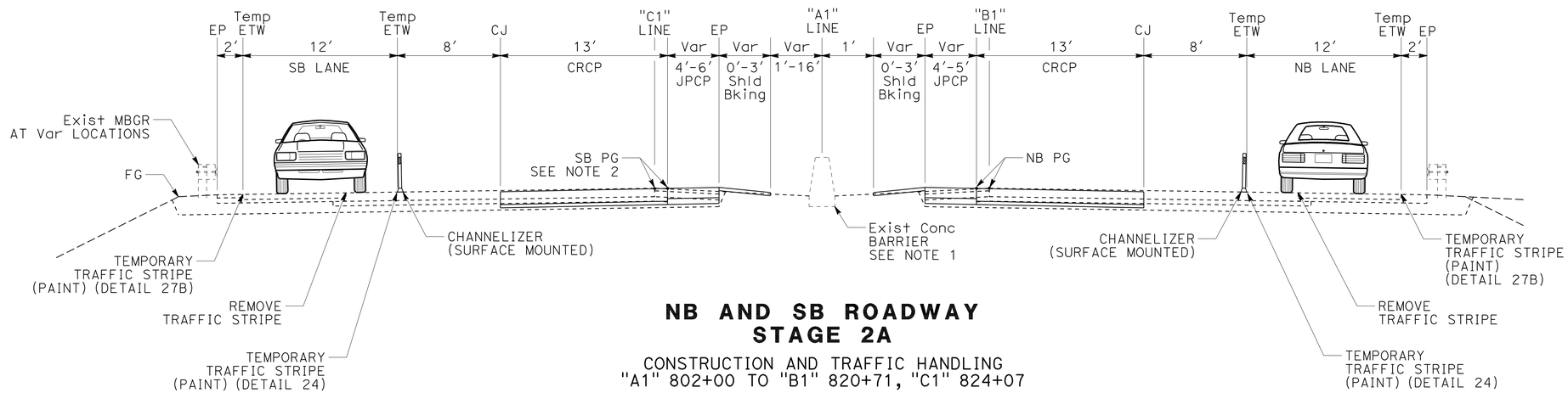

NB AND SB ROADWAY STAGE 2A

CONSTRUCTION AND TRAFFIC HANDLING
"A1" 802+00 TO "B1" 820+71, "C1" 824+07

NB/SB ROADWAY STAGE 2A

DIRECTION	STATION RANGE	CONSTRUCTION AREA SPEED ZONE REDUCTION	LANE CLOSURE	ROADWAY WORK
NB	"A1" 731+00 TO 766+00	X		
NB	"A1" 766+00 TO 806+50		X	
NB/SB	"A1" 806+50 TO "B1" 820+71 / "A1" 802+00 TO "C1" 824+07			X
SB	"C1" 825+00 TO 866+50		X	
SB	"C1" 866+50 TO 900+00	X		

STAGE CONSTRUCTION AND TRAFFIC HANDLING PLAN

NO SCALE

SC-8

THIS PLAN ACCURATE FOR STAGE CONSTRUCTION AND TRAFFIC HANDLING WORK ONLY

REVISED BY	DATE REVISED
R. WEBER	05-08-11

CALCULATED-DESIGNED BY: ROBERT WEBER
CHECKED BY: ROBERT REGINATO
FUNCTIONAL SUPERVISOR: STEVE TOPAL

STATE OF CALIFORNIA - DEPARTMENT OF TRANSPORTATION
DESIGN
Caltrans

P:\proj1\02\3E760_plans\pse\23e760ma008.dgn

LAST REVISION 06-14-11 | DATE PLOTTED => 17-AUG-2011 | TIME PLOTTED => 10:56

Dist	COUNTY	ROUTE	POST MILES TOTAL PROJECT	SHEET No.	TOTAL SHEETS
02	Sis	5	R50.9/R58.2	170	329

Robert Weber 06-14-11
REGISTERED CIVIL ENGINEER DATE

06-15-11
PLANS APPROVAL DATE

REGISTERED PROFESSIONAL ENGINEER ROBERT WEBER No. C62511 Exp. 9-30-11 CIVIL STATE OF CALIFORNIA

THE STATE OF CALIFORNIA OR ITS OFFICERS OR AGENTS SHALL NOT BE RESPONSIBLE FOR THE ACCURACY OR COMPLETENESS OF SCANNED COPIES OF THIS PLAN SHEET.

NOTE:

1. COMPLETE CLOSURE OF NB ROUTE 5 DURING STAGE 2A SHALL ONLY BE ALLOWED DURING PCC PAVING OPERATIONS AND SHALL NOT BE ALLOWED CONCURENTLY WITH CLOSURE OF SB ROUTE 5.

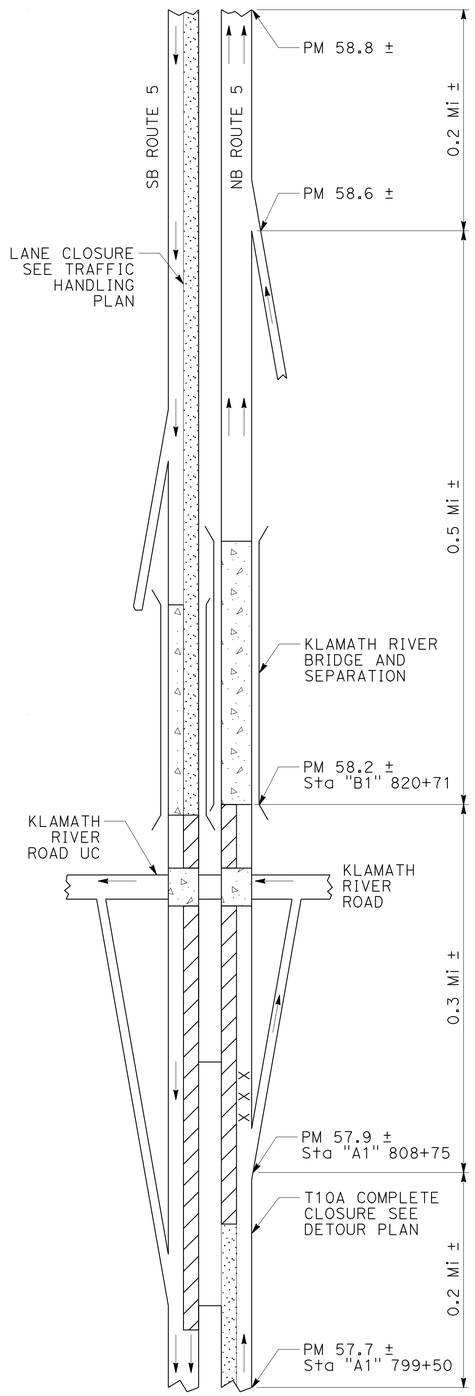

NB/SB Rdwy STAGE 2A

WORK LOCATION AND TRAFFIC HANDLING

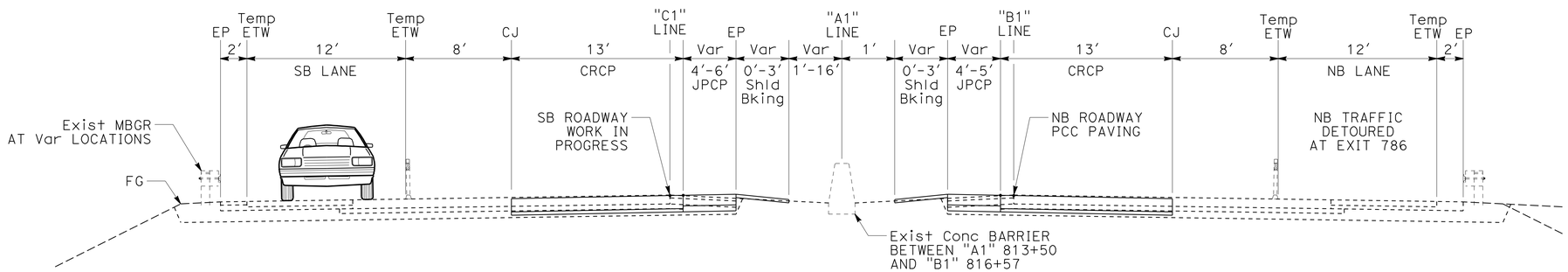

NB ROADWAY STAGE 2A PCC PAVING

CONSTRUCTION AND TRAFFIC HANDLING
"A1" 806+50 TO "B1" 820+71

THIS PLAN ACCURATE FOR STAGE CONSTRUCTION AND TRAFFIC HANDLING WORK ONLY

STAGE CONSTRUCTION AND TRAFFIC HANDLING PLAN

NO SCALE

SC-9

REVISED BY	R. WEBER
DATE REVISED	05-08-11
CALCULATED-DESIGNED BY	ROBERT WEBER
CHECKED BY	ROBERT REGINATO
FUNCTIONAL SUPERVISOR	STEVE TOPAL

STATE OF CALIFORNIA - DEPARTMENT OF TRANSPORTATION
Caltrans®
DESIGN

P:\proj\02\3E760_plans\pse\23e760ma009.dgn

LAST REVISION 06-14-11
DATE PLOTTED => 17-AUG-2011
TIME PLOTTED => 10:56

Dist	COUNTY	ROUTE	POST MILES TOTAL PROJECT	SHEET No.	TOTAL SHEETS
02	Sis	5	R50.9/R58.2	171	329

Robert Weber 06-14-11
REGISTERED CIVIL ENGINEER DATE

06-15-11
PLANS APPROVAL DATE

REGISTERED PROFESSIONAL ENGINEER
ROBERT WEBER
No. C62511
Exp. 9-30-11
CIVIL
STATE OF CALIFORNIA

THE STATE OF CALIFORNIA OR ITS OFFICERS OR AGENTS SHALL NOT BE RESPONSIBLE FOR THE ACCURACY OR COMPLETENESS OF SCANNED COPIES OF THIS PLAN SHEET.

NOTE:

1. COMPLETE CLOSURE OF SB ROUTE 5 DURING STAGE 2A SHALL ONLY BE ALLOWED DURING PCC PAVING OPERATIONS AND SHALL NOT BE ALLOWED CONCURRENTLY WITH CLOSURE OF NB ROUTE 5.

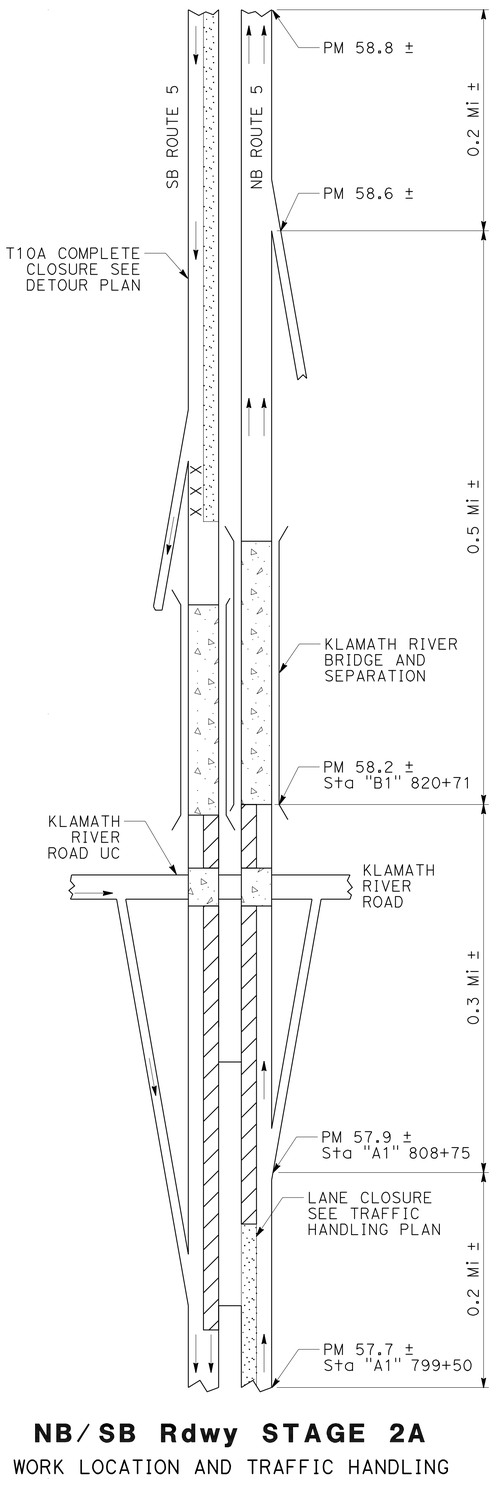

NB/SB Rdwy STAGE 2A

WORK LOCATION AND TRAFFIC HANDLING

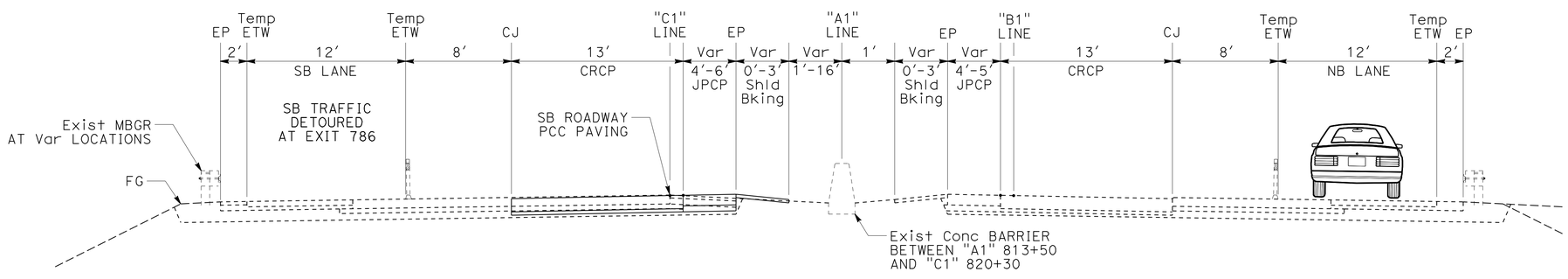

SB ROADWAY STAGE 2A PCC PAVING

CONSTRUCTION AND TRAFFIC HANDLING
"A1" 802+00 TO "C1" 824+07

THIS PLAN ACCURATE FOR STAGE CONSTRUCTION AND TRAFFIC HANDLING WORK ONLY

STAGE CONSTRUCTION AND TRAFFIC HANDLING PLAN

NO SCALE

SC-10

REVISED BY	DATE REVISED	CALCULATED-DESIGNED BY	CHECKED BY	FUNCTIONAL SUPERVISOR
R. WEBER	05-08-11			STEVE TOPAL

STATE OF CALIFORNIA - DEPARTMENT OF TRANSPORTATION
Caltrans®
DESIGN

P:\proj\02\3E760_plans\pse\23e760ma010.dgn

LAST REVISION 06-14-11
DATE PLOTTED => 17-AUG-2011
TIME PLOTTED => 10:56

Dist	COUNTY	ROUTE	POST MILES TOTAL PROJECT	SHEET No.	TOTAL SHEETS
02	Sis	5	R50.9/R58.2	172	329

Robert Weber 06-14-11
REGISTERED CIVIL ENGINEER DATE

06-15-11
PLANS APPROVAL DATE

REGISTERED PROFESSIONAL ENGINEER ROBERT WEBER No. C62511 Exp. 9-30-11 CIVIL STATE OF CALIFORNIA

THE STATE OF CALIFORNIA OR ITS OFFICERS OR AGENTS SHALL NOT BE RESPONSIBLE FOR THE ACCURACY OR COMPLETENESS OF SCANNED COPIES OF THIS PLAN SHEET.

NOTES:

1. THAT SEGMENT OF NB LANE No. 2 AND OUTSIDE SHOULDER BETWEEN Sta 806+50 AND 813+50 SHALL BE COMPLETED WITHIN THE ALLOWABLE RAMP CLOSURE PERIOD. THE LANE CLOSURE SHALL BE MODIFIED TO ALLOW THE RAMP TO BE REOPENED ONCE WORK ON THAT SEGMENT IS COMPLETE.
2. THAT SEGMENT OF SB LANE No. 2 AND OUTSIDE SHOULDER BETWEEN Sta 802+00 AND 805+00 SHALL BE COMPLETED WITHIN THE ALLOWABLE RAMP CLOSURE PERIOD. THE RAMP SHALL BE REOPENED ONCE WORK ON THAT SEGMENT IS COMPLETE.
3. NORTH OF "A1" 815+00 THE NB AND SB ROADWAYS NARROW AND THE Temp ETW COMES WITHIN 1 FOOT OF THE EXISTING MEDIAN BARRIER AND BRIDGE RAILS.

LEGEND:

WORK ON MAINLINE BEFORE OR AFTER RAMP CLOSURE

WORK ON MAINLINE DURING RAMP CLOSURE

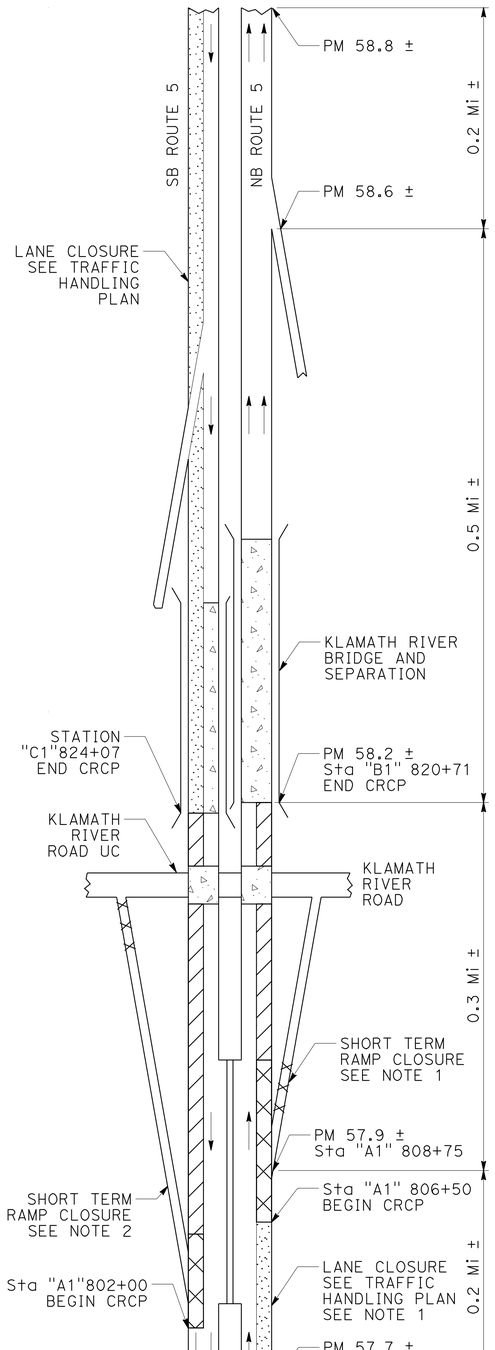

NB/SB Rdwy STAGE 2B

WORK LOCATION AND TRAFFIC HANDLING

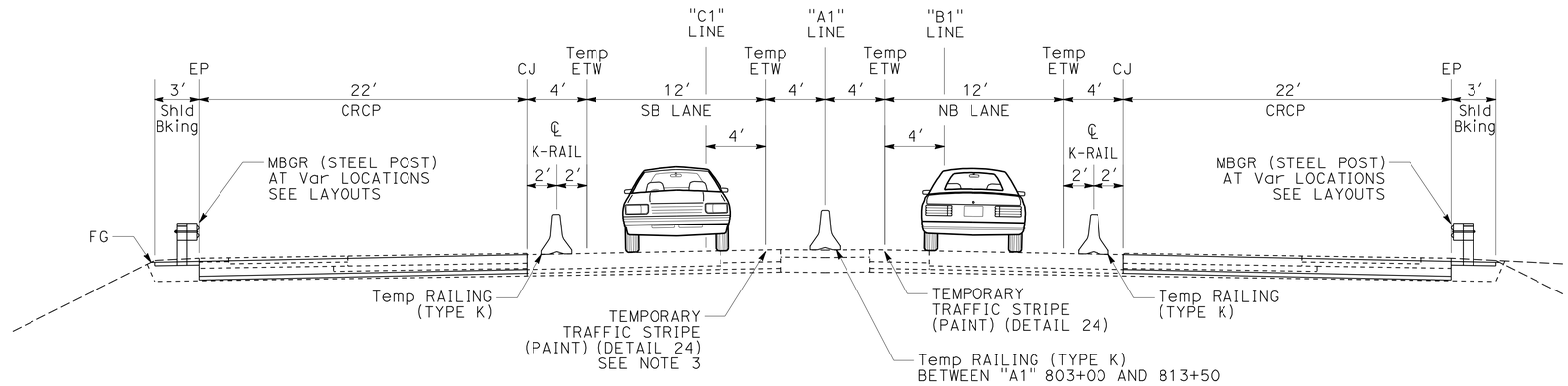

NB AND SB ROADWAY STAGE 2B

CONSTRUCTION AND TRAFFIC HANDLING
"A1" 802+00 TO "B1" 820+71, "C1" 824+07

NB/SB ROADWAY STAGE 2B

DIRECTION	STATION RANGE	CONSTRUCTION AREA SPEED ZONE REDUCTION	LANE CLOSURE	ROADWAY WORK
NB	"A1" 733+00 TO 767+00	X		
NB	"A1" 767+00 TO 805+50		X	
NB/SB	"A1" 806+50 TO "B1" 820+71 / "A1" 802+00 TO "C1" 824+07			X
SB	"C1" 825+00 TO 863+50		X	
SB	"C1" 863+50 TO 898+00	X		

STAGE CONSTRUCTION AND TRAFFIC HANDLING PLAN

NO SCALE

SC-11

THIS PLAN ACCURATE FOR STAGE CONSTRUCTION AND TRAFFIC HANDLING WORK ONLY

CALCULATED-DESIGNED BY	ROBERT WEBER	REVISED BY	R. WEBER
CHECKED BY	ROBERT REGINATO	DATE REVISED	05-08-11
FUNCTIONAL SUPERVISOR	STEVE TOPAL		

STATE OF CALIFORNIA - DEPARTMENT OF TRANSPORTATION
Caltrans® DESIGN

P:\proj1\02\3E760_plans\pse\23e760ma011.dgn

LAST REVISION 06-14-11 | DATE PLOTTED => 17-AUG-2011 | TIME PLOTTED => 10:57

Dist	COUNTY	ROUTE	POST MILES TOTAL PROJECT	SHEET No.	TOTAL SHEETS
02	Sis	5	R50.9/R58.2	173	329

Robert Weber 06-14-11
REGISTERED CIVIL ENGINEER DATE

06-15-11
PLANS APPROVAL DATE

REGISTERED PROFESSIONAL ENGINEER ROBERT WEBER No. C62511 Exp. 9-30-11 CIVIL STATE OF CALIFORNIA

THE STATE OF CALIFORNIA OR ITS OFFICERS OR AGENTS SHALL NOT BE RESPONSIBLE FOR THE ACCURACY OR COMPLETENESS OF SCANNED COPIES OF THIS PLAN SHEET.

NOTES:

1. COMPLETE CLOSURE OF NB ROUTE 5 DURING STAGE 2B SHALL ONLY BE ALLOWED DURING PCC PAVING OPERATIONS AND SHALL NOT BE ALLOWED CONCURENTLY WITH CLOSURE OF SB ROUTE 5.
2. IF K-RAIL IS REMOVED DURING PCC PAVING OPERATIONS PLACE CHANNELIZERS BEFORE REOPENING Temp NB LANE TO TRAFFIC.

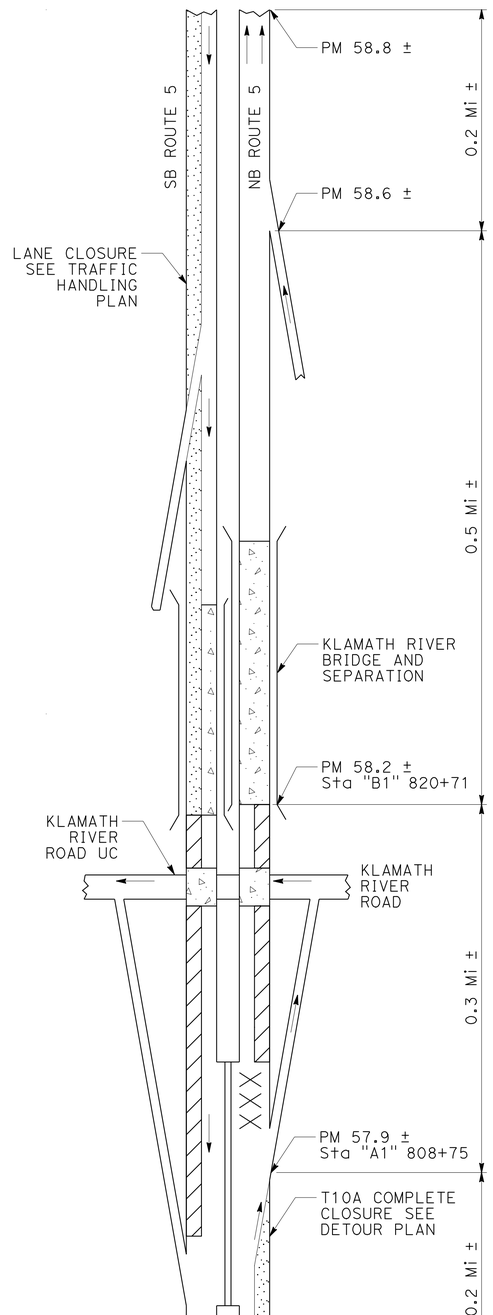

NB/SB Rdwy STAGE 2B

WORK LOCATION AND TRAFFIC HANDLING

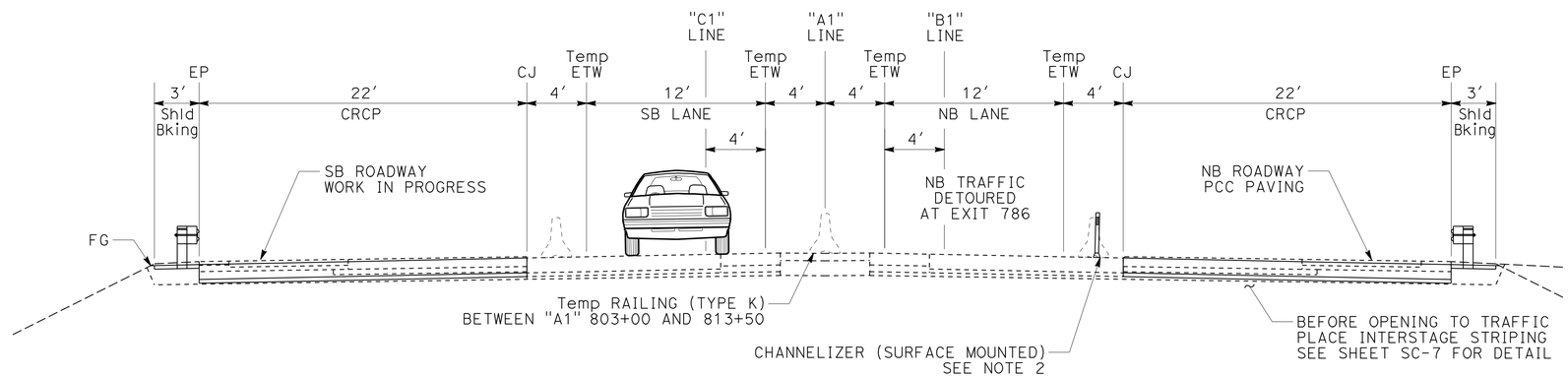

NB ROADWAY STAGE 2B PCC PAVING

CONSTRUCTION AND TRAFFIC HANDLING
"A1" 813+50 TO "B1" 820+71

THIS PLAN ACCURATE FOR STAGE CONSTRUCTION AND TRAFFIC HANDLING WORK ONLY

STAGE CONSTRUCTION AND TRAFFIC HANDLING PLAN

NO SCALE

SC-12

REVISED BY	DATE REVISED
R. WEBER	05-08-11

CALCULATED-DESIGNED BY: ROBERT WEBER
CHECKED BY: ROBERT REGINATO
FUNCTIONAL SUPERVISOR: STEVE TOPAL

STATE OF CALIFORNIA - DEPARTMENT OF TRANSPORTATION
Caltrans
DESIGN

P:\proj1\02\3E760_plans\pse\23e760ma012.dgn

LAST REVISION 06-14-11 | DATE PLOTTED => 17-AUG-2011 | TIME PLOTTED => 10:57

Dist	COUNTY	ROUTE	POST MILES TOTAL PROJECT	SHEET No.	TOTAL SHEETS
02	Sis	5	R50.9/R58.2	174	329

Robert Weber 06-14-11
REGISTERED CIVIL ENGINEER DATE

06-15-11
PLANS APPROVAL DATE

REGISTERED PROFESSIONAL ENGINEER ROBERT WEBER No. C62511 Exp. 9-30-11 CIVIL STATE OF CALIFORNIA

THE STATE OF CALIFORNIA OR ITS OFFICERS OR AGENTS SHALL NOT BE RESPONSIBLE FOR THE ACCURACY OR COMPLETENESS OF SCANNED COPIES OF THIS PLAN SHEET.

NOTES:

1. COMPLETE CLOSURE OF SB ROUTE 5 DURING STAGE 2B SHALL ONLY BE ALLOWED DURING PCC PAVING OPERATIONS AND SHALL NOT BE ALLOWED CONCURENTLY WITH CLOSURE OF NB ROUTE 5.
2. IF K-RAIL IS REMOVED DURING PAVING OPERATIONS PLACE CHANNELIZERS BEFORE REOPENING Temp SB LANE TO TRAFFIC.

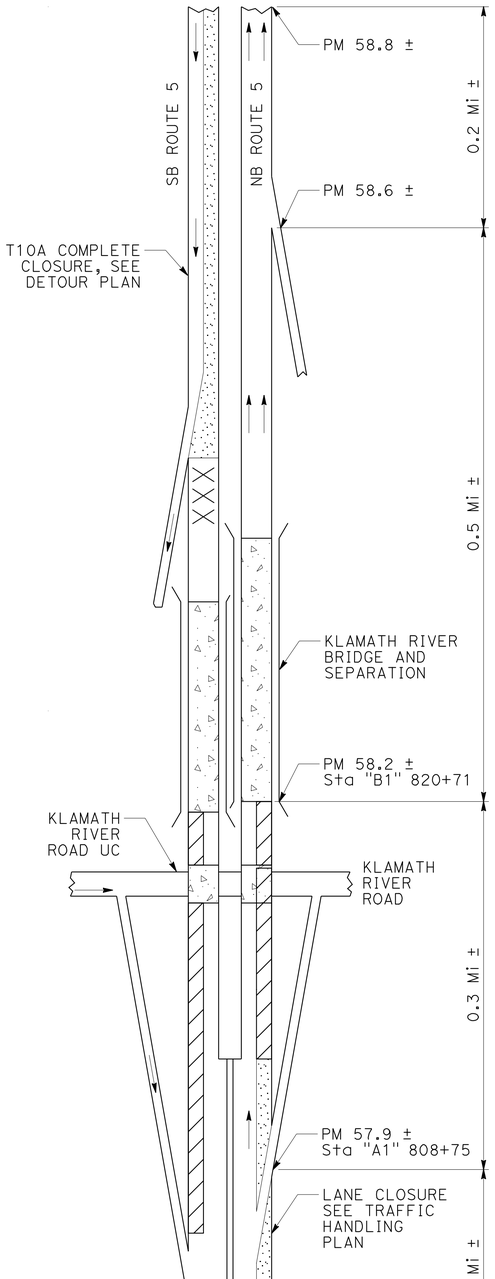

STAGE 2B

WORK LOCATION AND TRAFFIC HANDLING

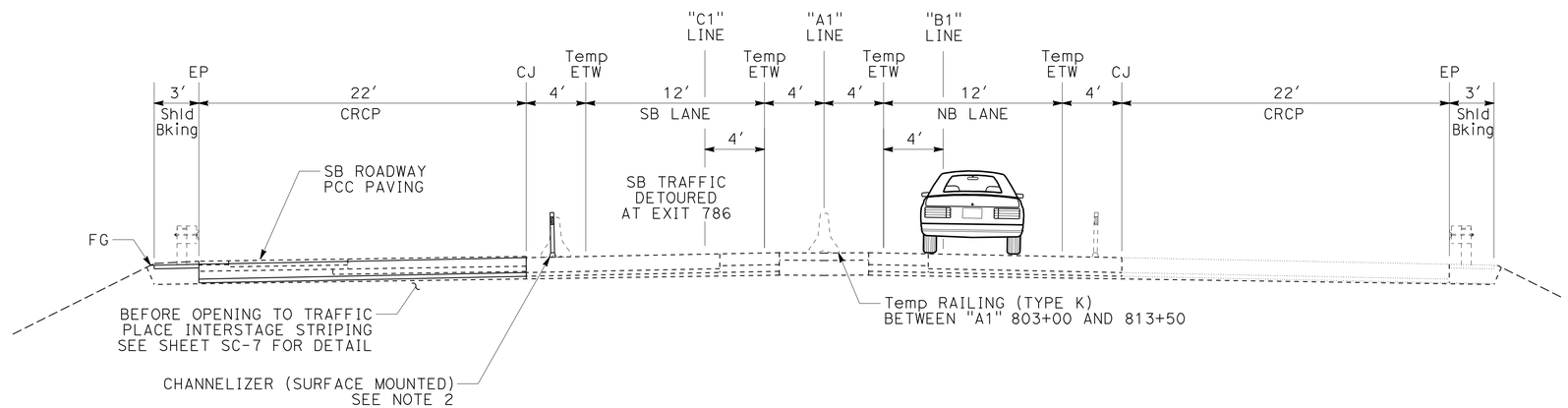

SB ROADWAY
STAGE 2B PCC PAVING

CONSTRUCTION AND TRAFFIC HANDLING
"A1" 805+00 TO "C1" 824+07

THIS PLAN ACCURATE FOR STAGE CONSTRUCTION AND TRAFFIC HANDLING WORK ONLY

STAGE CONSTRUCTION AND TRAFFIC HANDLING PLAN

NO SCALE

SC-13

REVISED BY	DATE REVISED	CALCULATED-DESIGNED BY	CHECKED BY	FUNCTIONAL SUPERVISOR
R. WEBER	05-08-11	ROBERT WEBER	ROBERT REGINATO	STEVE TOPAL

STATE OF CALIFORNIA - DEPARTMENT OF TRANSPORTATION
Caltrans DESIGN

P:\proj1\02\3E760_plans\pse\23e760ma013.dgn

LAST REVISION 06-14-11 | DATE PLOTTED => 17-AUG-2011 | TIME PLOTTED => 10:57

Dist	COUNTY	ROUTE	POST MILES TOTAL PROJECT	SHEET No.	TOTAL SHEETS
02	Sis	5	R50.9/R58.2	175	329

Robert Weber 06-14-11
REGISTERED CIVIL ENGINEER DATE

06-15-11
PLANS APPROVAL DATE

REGISTERED PROFESSIONAL ENGINEER ROBERT WEBER No. C62511 Exp. 9-30-11 CIVIL STATE OF CALIFORNIA

THE STATE OF CALIFORNIA OR ITS OFFICERS OR AGENTS SHALL NOT BE RESPONSIBLE FOR THE ACCURACY OR COMPLETENESS OF SCANNED COPIES OF THIS PLAN SHEET.

NOTE:

1. IF WORK ON STAGES 3A-3C IS PROCEEDING DURING THE 2013 CONSTRUCTION SEASON, THE SHASTA RIVER BRIDGES PROJECT (02-3C920) WILL BE IN PROGRESS AND CROSSOVERS 1 AND 2 WILL BE UTILIZED BY THE BRIDGE CONTRACTOR.

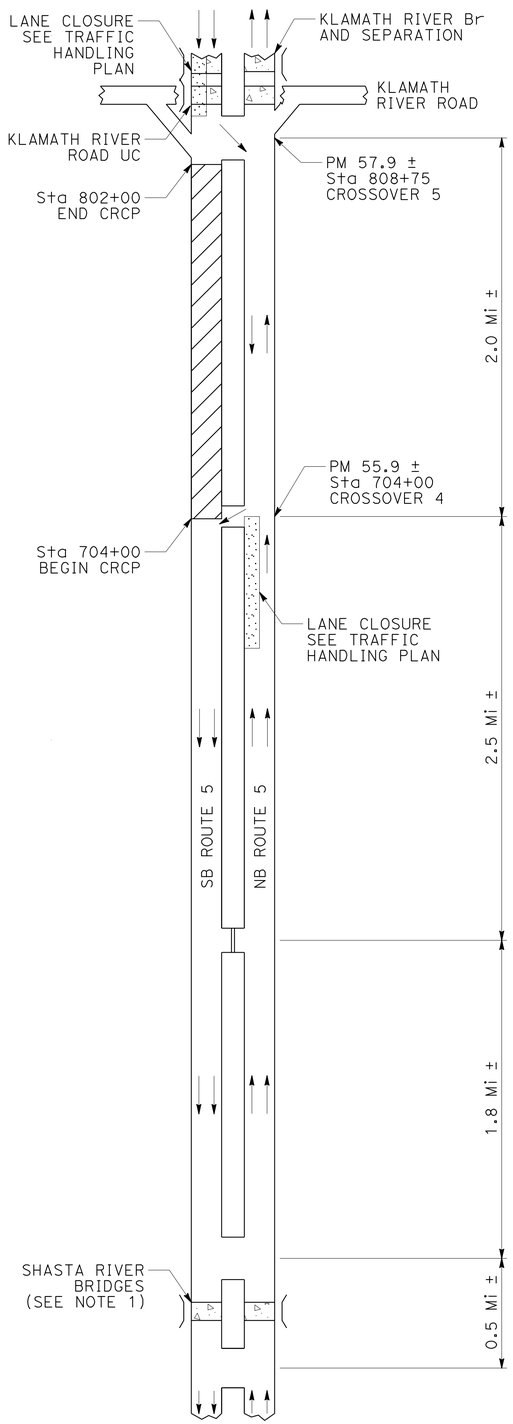

SB ROADWAY STAGE 3A

WORK LOCATION AND TRAFFIC HANDLING

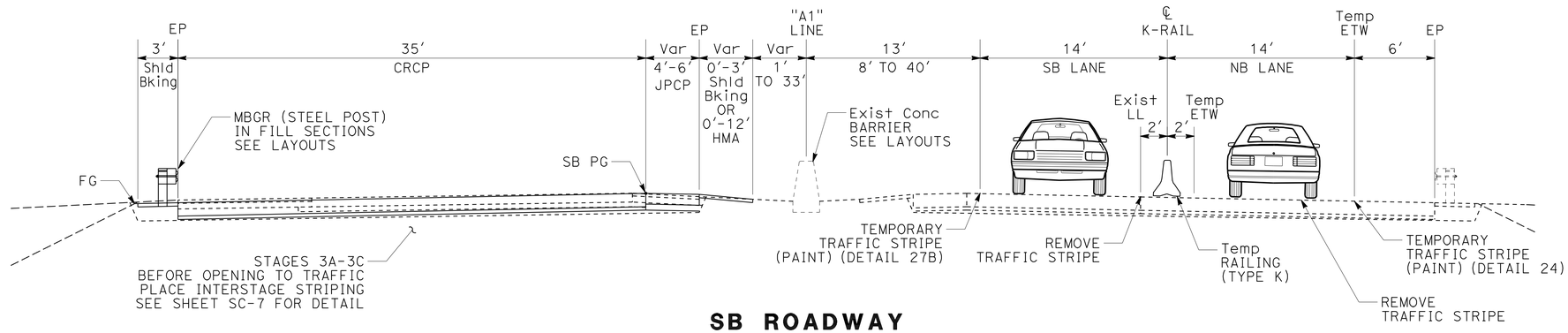

SB ROADWAY STAGES 3A-3C

CONSTRUCTION AND TRAFFIC HANDLING
"A1" 460+01 TO "A1" 802+00

SB ROADWAY STAGE 3A

DIRECTION	STATION RANGE	CONSTRUCTION AREA SPEED ZONE REDUCTION	LANE CLOSURE	CROSSOVERS (4-5)	ROADWAY WORK
NB	"A1" 631+00 TO 665+50	X			
NB	"A1" 665+50 TO 704+00		X		
NB	"A1" 700+00 TO 815+00			X	
SB	"A1" 704+00 TO 802+00				X
SB	"A1" 815+00 TO "C1" 851+00		X		
SB	"C1" 851+00 TO 885+00	X			

THIS PLAN ACCURATE FOR STAGE CONSTRUCTION AND TRAFFIC HANDLING WORK ONLY

STAGE CONSTRUCTION AND TRAFFIC HANDLING PLAN

NO SCALE

SC-14

REVISED BY	DATE REVISED
R. WEBER	05-08-11

CALCULATED-DESIGNED BY: ROBERT WEBER
CHECKED BY: ROBERT REGINATO
FUNCTIONAL SUPERVISOR: STEVE TOPAL

STATE OF CALIFORNIA - DEPARTMENT OF TRANSPORTATION
Caltrans DESIGN

P:\proj1\02\3E760_plans\pse\23e760ma014.dgn

LAST REVISION OG-14-11 | DATE PLOTTED => 17-AUG-2011 | TIME PLOTTED => 10:57

BORDER LAST REVISED 7/2/2010 | USERNAME => s115152 | DGN FILE => 23e760ma014.dgn | RELATIVE BORDER SCALE IS IN INCHES 0 1 2 3 | UNIT 0319 | PROJECT NUMBER & PHASE 02000201621

Dist	COUNTY	ROUTE	POST MILES TOTAL PROJECT	SHEET No.	TOTAL SHEETS
02	Sis	5	R50.9/R58.2	176	329

Robert Weber 06-14-11
REGISTERED CIVIL ENGINEER DATE

06-15-11
PLANS APPROVAL DATE

REGISTERED PROFESSIONAL ENGINEER ROBERT WEBER No. C62511 Exp. 9-30-11 CIVIL STATE OF CALIFORNIA

THE STATE OF CALIFORNIA OR ITS OFFICERS OR AGENTS SHALL NOT BE RESPONSIBLE FOR THE ACCURACY OR COMPLETENESS OF SCANNED COPIES OF THIS PLAN SHEET.

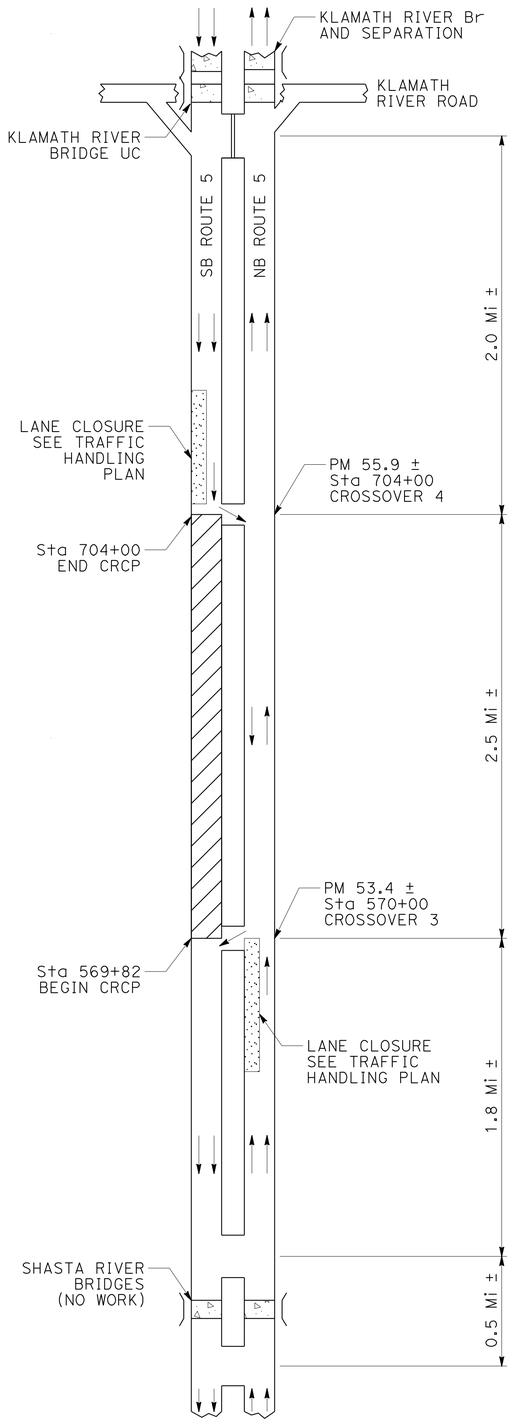

SB ROADWAY STAGE 3B

WORK LOCATION AND TRAFFIC HANDLING

NOTES:

1. AN ADDITIONAL RUN OF K-RAIL MAY BE PLACED TO ALLOW REMOVAL AND REPLACEMENT OF THE MEDIAN BARRIER FROM ONE SIDE.
2. A 16′ MINIMUM, TOE TO TOE CLEARANCE BETWEEN THE RUNS OF K-RAIL MUST BE MAINTAINED.
3. SECTION VIEW SHOWN WOULD BE MIRRORED IF WORKING FROM THE NB ROADWAY.

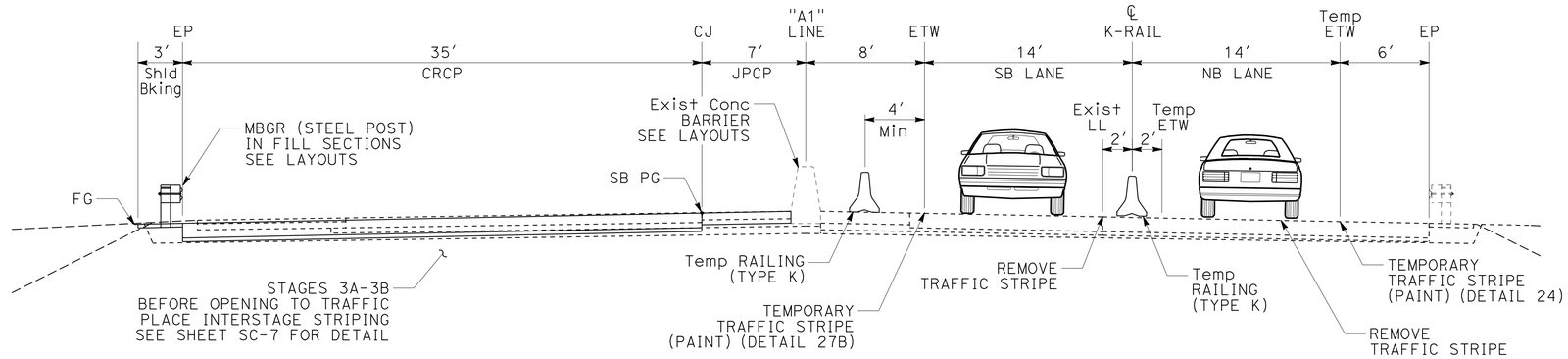

SB ROADWAY STAGES 3B-3C

CONSTRUCTION AND ALTERNATE TRAFFIC HANDLING
"A1" 572+00 TO "A1" 802+00

SB ROADWAY STAGE 3B

DIRECTION	STATION RANGE	CONSTRUCTION AREA SPEED ZONE REDUCTION	LANE CLOSURE	CROSSOVERS (3-4)	ROADWAY WORK
NB	"A1" 498+00 TO 532+00	X			
NB	"A1" 532+00 TO 570+50		X		
NB	"A1" 565+75 TO 709+00			X	
SB	"A1" 569+82 TO 704+00				X
SB	"A1" 709+00 TO 744+00		X		
SB	"A1" 744+00 TO 778+00	X			

THIS PLAN ACCURATE FOR STAGE CONSTRUCTION AND TRAFFIC HANDLING WORK ONLY

STAGE CONSTRUCTION AND TRAFFIC HANDLING PLAN

NO SCALE

SC-15

REVISED BY	DATE REVISED
R. WEBER	05-08-11

CALCULATED-DESIGNED BY: ROBERT WEBER
CHECKED BY: ROBERT REGINATO
FUNCTIONAL SUPERVISOR: STEVE TOPAL

STATE OF CALIFORNIA - DEPARTMENT OF TRANSPORTATION
Caltrans® DESIGN

P:\proj1\02\3E760_plans\pse\23e760ma015.dgn

LAST REVISION 06-14-11
DATE PLOTTED => 17-AUG-2011
TIME PLOTTED => 10:57

Dist	COUNTY	ROUTE	POST MILES TOTAL PROJECT	SHEET No.	TOTAL SHEETS
02	Sis	5	R50.9/R58.2	177	329

Robert Weber 06-14-11
REGISTERED CIVIL ENGINEER DATE

06-15-11
PLANS APPROVAL DATE

REGISTERED PROFESSIONAL ENGINEER ROBERT WEBER No. C62511 Exp. 9-30-11 CIVIL STATE OF CALIFORNIA

THE STATE OF CALIFORNIA OR ITS OFFICERS OR AGENTS SHALL NOT BE RESPONSIBLE FOR THE ACCURACY OR COMPLETENESS OF SCANNED COPIES OF THIS PLAN SHEET.

NOTE:

1. WORK ON STAGES 3A-3C MAY PROCEED SIMULTANEOUSLY WITH WORK ON THE DECK OF THE SHASTA RIVER BRIDGE (02-0148L), IN THAT CASE, CROSSOVERS 1 AND 2 WILL HAVE BEEN PUT INTO SERVICE BY THE BRIDGE CONTRACTOR. WHEN CROSSOVER 3 IS UTILIZED DURING STAGE 3C, CROSSOVER 2 WILL BE BYPASSED BUT WILL NEED TO BE RESTORED IF STAGE 3C WORK IS COMPLETED BEFORE THE WORK ON THE SHASTA RIVER BRIDGE. COORDINATION OF TRAFFIC CONTROL WILL BE UNDER THE DIRECTION OF THE ENGINEER.
2. WORK ON THE DECK OF THE SHASTA RIVER BRIDGE (02-0148L) IS EXPECTED TO TAKE PLACE DURING THE 2014 CONSTRUCTION SEASON.

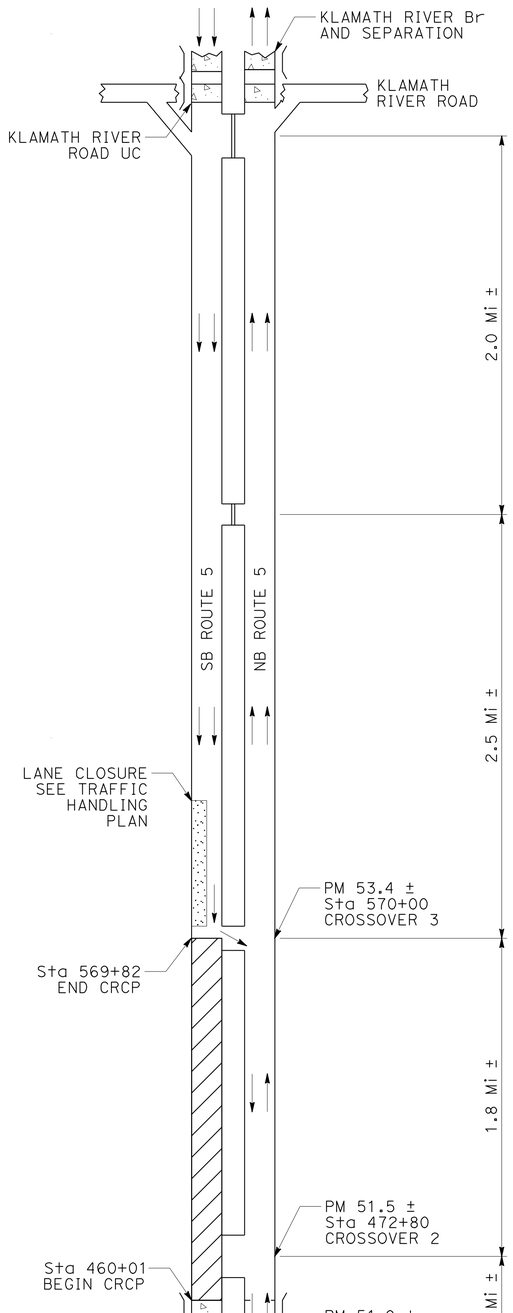

STAGE 3C

WORK LOCATION AND TRAFFIC HANDLING

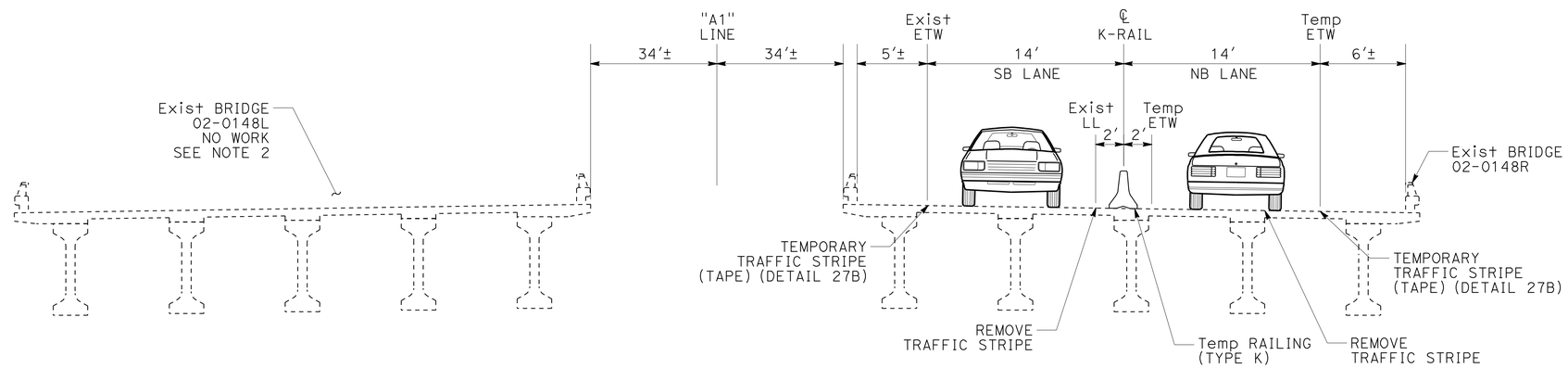

SB ROADWAY
STAGE 3C

TRAFFIC HANDLING AT SHASTA RIVER BRIDGES
"A1" 454+22 TO "A1" 459+52

SB ROADWAY STAGE 3C

DIRECTION	STATION RANGE	CONSTRUCTION AREA SPEED ZONE REDUCTION	LANE CLOSURE	CROSSOVERS (1-3)	ROADWAY WORK
NB	"A1" 377+00 TO 411+50	X			
NB	"A1" 411+50 TO 450+00		X		
NB	"A1" 442+00 TO 572+50			X	
SB	"A1" 460+01 TO 569+82				X
SB	"A1" 572+50 TO 607+50		X		
SB	"A1" 607+50 TO 642+00	X			

THIS PLAN ACCURATE FOR STAGE CONSTRUCTION AND TRAFFIC HANDLING WORK ONLY

STAGE CONSTRUCTION AND TRAFFIC HANDLING PLAN

NO SCALE

SC-16

CALCULATED-DESIGNED BY	R. WEBER	REVISED BY	ROBERT WEBER	FUNCTIONAL SUPERVISOR	STEVE TOPAL
CHECKED BY	05-10-11	DATE REVISED	ROBERT REGINATO		

STATE OF CALIFORNIA - DEPARTMENT OF TRANSPORTATION
Caltrans® DESIGN

P:\proj1\02\3E760_plans\pse\23e760ma016.dgn

LAST REVISION 06-14-11 | DATE PLOTTED => 17-AUG-2011 TIME PLOTTED => 10:57

Dist	COUNTY	ROUTE	POST MILES TOTAL PROJECT	SHEET No.	TOTAL SHEETS
02	Sis	5	R50.9/R58.2	178	329

Robert Weber 06-14-11
REGISTERED CIVIL ENGINEER DATE

06-15-11
PLANS APPROVAL DATE

REGISTERED PROFESSIONAL ENGINEER ROBERT WEBER No. C62511 Exp. 9-30-11 CIVIL STATE OF CALIFORNIA

THE STATE OF CALIFORNIA OR ITS OFFICERS OR AGENTS SHALL NOT BE RESPONSIBLE FOR THE ACCURACY OR COMPLETENESS OF SCANNED COPIES OF THIS PLAN SHEET.

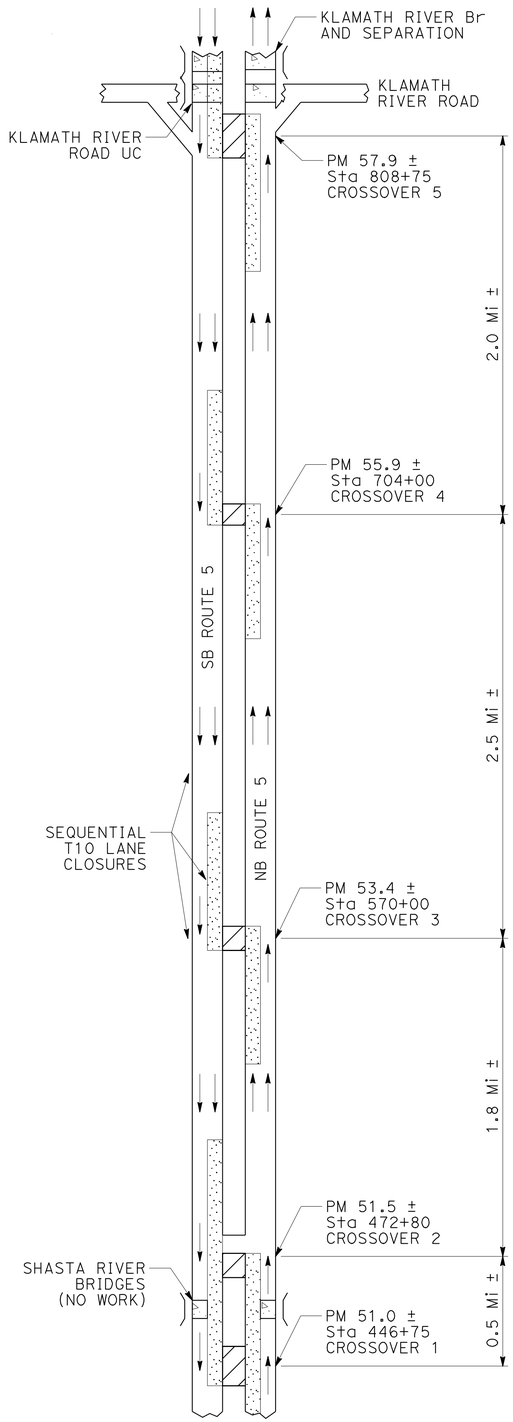

STAGE 4A

WORK LOCATION AND TRAFFIC HANDLING

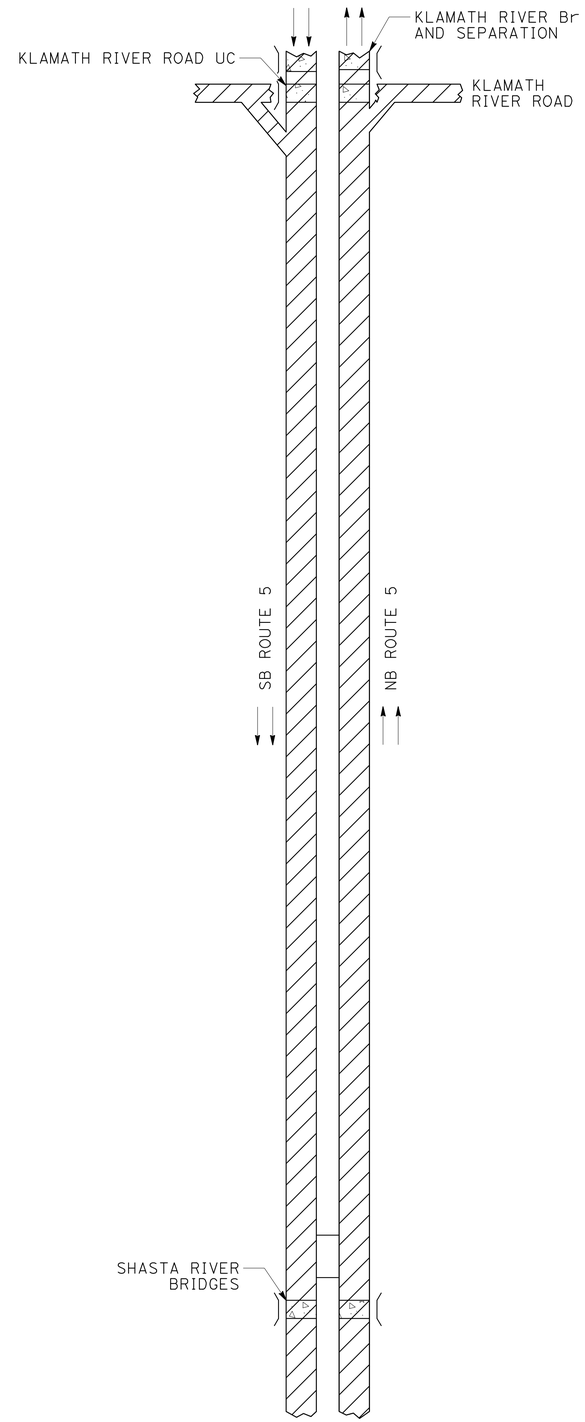

STAGE 4B

WORK LOCATION

NOTES:

1. STAGE 4A IS DESIGNATED FOR REMOVING THE CROSSOVERS, REPLACING THE MEDIAN BARRIER WHERE NECESSARY AND CONSTRUCTING MEDIAN SHOULDERS THAT WERE LEFT OUT ALONG THE CROSSOVERS. SEE SHEET SC-3 FOR SECTION VIEW OF TRAFFIC HANDLING.

2. STAGE 4B IS DESIGNATED FOR THE PAVING OF KLAMATH RIVER ROAD AND PLACEMENT OF FINAL STRIPING. FINAL STRIPING WILL BE DONE WITH ROLLING LANE CLOSURES.

THIS PLAN ACCURATE FOR STAGE CONSTRUCTION AND TRAFFIC HANDLING WORK ONLY

STAGE CONSTRUCTION AND TRAFFIC HANDLING PLAN

NO SCALE

SC-17

REVISED BY	R. WEBER
DATE REVISED	05-23-11
CALCULATED-DESIGNED BY	ROBERT WEBER
CHECKED BY	ROBERT REGINATO
FUNCTIONAL SUPERVISOR	STEVE TOPAL

STATE OF CALIFORNIA - DEPARTMENT OF TRANSPORTATION
Caltrans® DESIGN

P:\proj1\02\3E760_plans\pse\23e760ma017.dgn

LAST REVISION 06-14-11 | DATE PLOTTED => 17-AUG-2011 | TIME PLOTTED => 10:57

Dist	COUNTY	ROUTE	POST MILES TOTAL PROJECT	SHEET No.	TOTAL SHEETS
02	Sis	5	R50.9/R58.2	179	329

Robert Weber 06-14-11
REGISTERED CIVIL ENGINEER DATE

06-15-11
PLANS APPROVAL DATE

REGISTERED PROFESSIONAL ENGINEER ROBERT WEBER No. C62511 Exp. 9-30-11 CIVIL STATE OF CALIFORNIA

THE STATE OF CALIFORNIA OR ITS OFFICERS OR AGENTS SHALL NOT BE RESPONSIBLE FOR THE ACCURACY OR COMPLETENESS OF SCANNED COPIES OF THIS PLAN SHEET.

NOTES:

1. EXACT CONSTRUCTION SIGN AND PCMS LOCATIONS TO BE DETERMINED BY THE ENGINEER.
2. SEE STANDARD PLAN T-10 FOR ADDITIONAL REQUIREMENTS.
3. DURING SPEED ZONE REDUCTION, EXISTING SPEED LIMIT SIGNS SHALL BE COVERED, AS DIRECTED BY THE ENGINEER.
4. IF THERE IS NO SPEED LIMIT SIGN (R2-1) WITHIN 1 MILE BEYOND THE END OF WORK THE ZONE, INSTALL A TEMPORARY, 65 MPH SPEED LIMIT SIGN (R2-1) 500 FT BEYOND THE END OF THE WORK ZONE.
5. SIGNS SHOWN WITH (CA) INDICATE CALIFORNIA SIGN CODES, OTHERWISE FEDERAL SIGN CODES ARE SHOWN.

CONSTRUCTION AREA SIGNS (STATIONARY MOUNTED)

CODE	PANEL SIZE	SIGN MESSAGE	NUMBER AND SIZE OF POSTS	NUMBER OF SIGNS (PER STAGE)							
				1A	1B	1C	2A	2B	3A	3B	3C
W20-1	48" x 48"	ROAD WORK AHEAD	1 - 4" x 6"	4	4	4	4	4	4	4	4
R2-4(CA)	36" x 48"	55 ZONE AHEAD									
W20-1	48" x 48"	ROAD WORK AHEAD	1 - 4" x 6"	4	4	5	4	4	5	4	4
R2-1	36" x 48"	SPEED LIMIT 55									
R3(CA)	36" x 48"	END 55 SPEED LIMIT	1 - 4" x 6"	2	2	2	2	2	2	2	2
R2-1	36" x 48"	SPEED LIMIT 65	1 - 4" x 6"	2	2	2	2	2	2	2	2
			TOTAL THIS SHEET	12	12	13	12	12	13	12	12

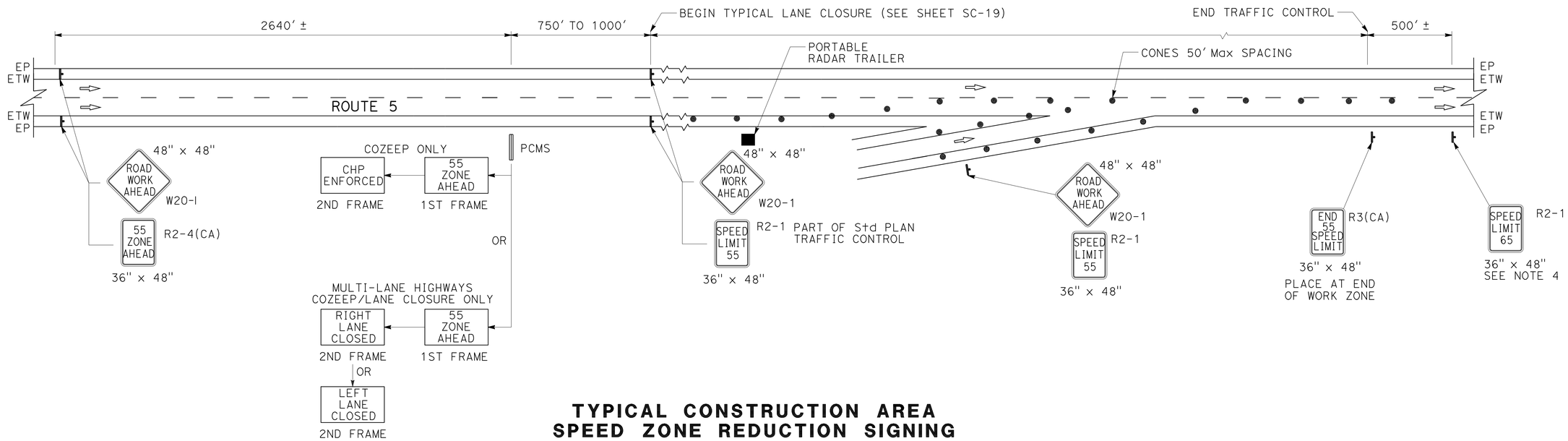

TYPICAL CONSTRUCTION AREA SPEED ZONE REDUCTION SIGNING

STAGE CONSTRUCTION AND TRAFFIC HANDLING PLAN

NO SCALE

SC-18

THIS PLAN ACCURATE FOR STAGE CONSTRUCTION AND TRAFFIC HANDLING WORK ONLY

REVISED BY	DATE REVISED
R WEBER	06-03-11

CALCULATED-DESIGNED BY: RUSSELL FLOOD
CHECKED BY: ROBERT WEBER
FUNCTIONAL SUPERVISOR: STEVE TOPAL

STATE OF CALIFORNIA - DEPARTMENT OF TRANSPORTATION
Caltrans DESIGN

P:\proj1\02\3E760_plans\pse\23e760ma018.dgn

LAST REVISION 06-14-11
DATE PLOTTED => 17-AUG-2011
TIME PLOTTED => 10:57

Dist	COUNTY	ROUTE	POST MILES TOTAL PROJECT	SHEET No.	TOTAL SHEETS
02	Sis	5	R50.9/R58.2	180	329

Robert Weber 06-14-11
REGISTERED CIVIL ENGINEER DATE

06-15-11
PLANS APPROVAL DATE

REGISTERED PROFESSIONAL ENGINEER ROBERT WEBER No. C62511 Exp. 9-30-11 CIVIL STATE OF CALIFORNIA

THE STATE OF CALIFORNIA OR ITS OFFICERS OR AGENTS SHALL NOT BE RESPONSIBLE FOR THE ACCURACY OR COMPLETENESS OF SCANNED COPIES OF THIS PLAN SHEET.

CONSTRUCTION AREA SIGNS (STATIONARY MOUNTED)

NOTES:

1. FOR LEFT LANE CLOSURE, MIRROR ARROW PLACEMENT, STRIPING, CHANNELIZERS AND USE W20-5 (L†) AND W4-2 (L†).
2. SEE STANDARD PLANS FOR ADDITIONAL INFORMATION.
3. MEDIAN SIGNS MAY NEED TO BE BARRIER MOUNTED, SEE SIGN DETAILS FOR MOUNTING BRACKET.
4. PART OF SPEED ZONE REDUCTION PACKAGE.

CODE	PANEL SIZE	SIGN MESSAGE	NUMBER AND SIZE OF POSTS	NUMBER OF SIGNS (PER STAGE)							
				1A	1B	1C	2A	2B	3A	3B	3C
W20-5 (L†)	48" x 48"	LEFT LANE CLOSED AHEAD	1 - 4" x 6"	2	2	2	4		2	2	2
W20-5 (R†)	48" x 48"	RIGHT LANE CLOSED AHEAD	1 - 4" x 6"	2	2	2		4	2	2	2
W4-2L	48" x 48"	LEFT LANE ENDS	1 - 4" x 6"	2	2	2	4		2	2	2
W4-2R	48" x 48"	RIGHT LANE ENDS	1 - 4" x 6"	2	2	2		4	2	2	2
W6-3 W7-3a	48" x 48" 48" x 36"	TWO-WAY TRAFFIC NEXT 2 MILES	1 - 4" x 6" 1 - 4" x 6"	2	2	2			2	2	2
C30 (CA)	48" x 48"	LANE CLOSED	1 - 4" x 6"	2	2	2	2	2	2	2	2
W1-4L	48" x 48"	REVERSE CURVE (LEFT)	1 - 4" x 6"	1	1	1			1	1	1
W1-4R*	48" x 48"	REVERSE CURVE (RIGHT)	1 - 4" x 6"	1	1				1	1	1
			TOTAL THIS SHEET	14	14	13	10	10	14	14	14

*SEE STAGE CONSTRUCTION AND TRAFFIC HANDLING DETAILS FOR SIGN LOCATION.

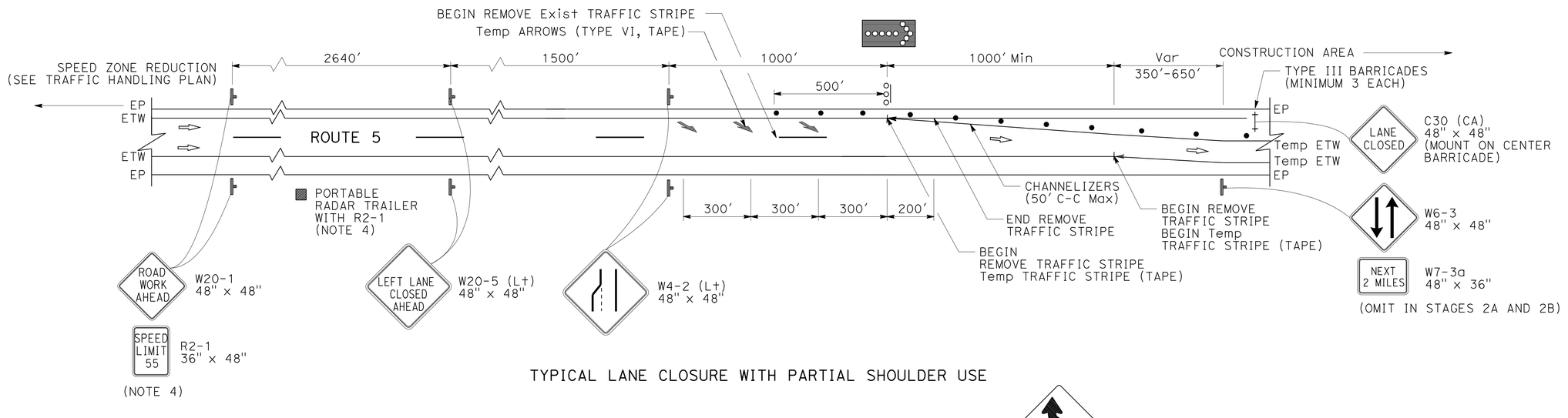

TYPICAL LANE CLOSURE WITH PARTIAL SHOULDER USE

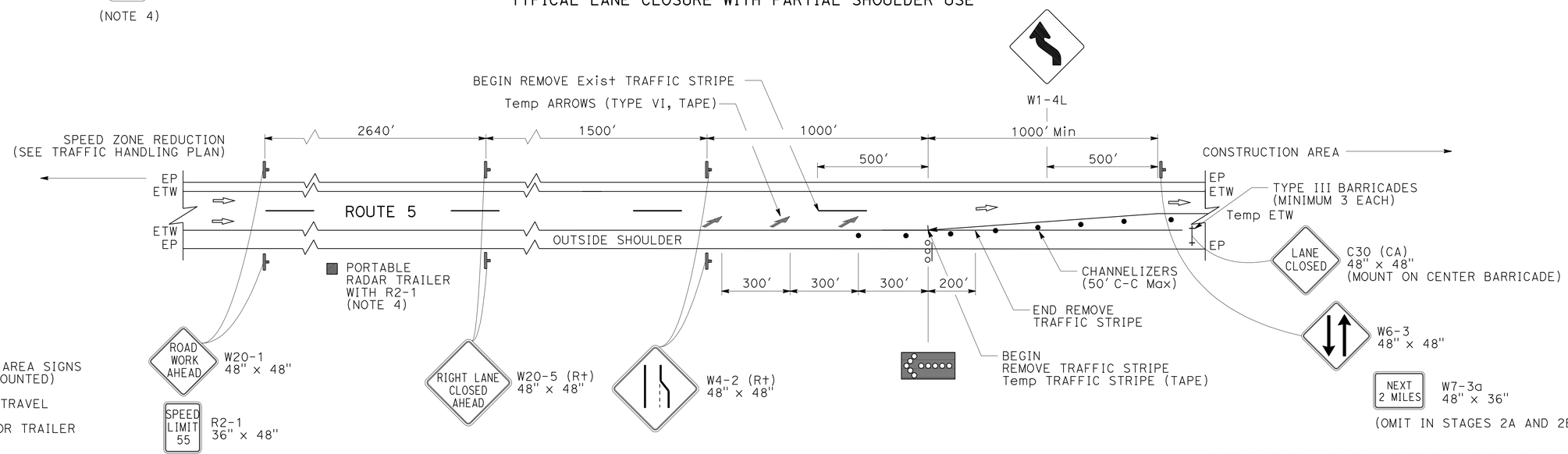

TYPICAL LANE CLOSURE

LEGEND:

- CONSTRUCTION AREA SIGNS (STATIONARY MOUNTED)
- DIRECTION OF TRAVEL
- FAS SUPPORT OR TRAILER
- FLASHING ARROW SIGN (FAS)
- STRIPE CHANGE LOCATION

THIS PLAN ACCURATE FOR STAGE CONSTRUCTION AND TRAFFIC HANDLING WORK ONLY

STAGE CONSTRUCTION AND TRAFFIC HANDLING PLAN

NO SCALE

SC-19

REVISED BY	DATE REVISED
R. WEBER	06-06-11

CALCULATED-DESIGNED BY: RUSSELL FLOOD
CHECKED BY: ROBERT WEBER
FUNCTIONAL SUPERVISOR: STEVE TOPAL

STATE OF CALIFORNIA - DEPARTMENT OF TRANSPORTATION
Caltrans DESIGN

P:\proj1\02\3E760_plans\pse\23e760ma019.dgn

LAST REVISION 06-14-11 | DATE PLOTTED => 17-AUG-2011 | TIME PLOTTED => 10:58

Dist	COUNTY	ROUTE	POST MILES TOTAL PROJECT	SHEET No.	TOTAL SHEETS
02	Sis	5	R50.9/R58.2	181	329

Robert Weber 06-14-11
REGISTERED CIVIL ENGINEER DATE

06-15-11
PLANS APPROVAL DATE

REGISTERED PROFESSIONAL ENGINEER ROBERT WEBER No. C62511 Exp. 9-30-11 CIVIL STATE OF CALIFORNIA

THE STATE OF CALIFORNIA OR ITS OFFICERS OR AGENTS SHALL NOT BE RESPONSIBLE FOR THE ACCURACY OR COMPLETENESS OF SCANNED COPIES OF THIS PLAN SHEET.

NOTE:

1. CONFORM EXISTING CROSSOVER TO NEW JPCP IN STAGE 3C.

ABBREVIATIONS:

Super	SUPERELEVATION
PCCP	PORTLAND CEMENT CONCRETE PAVEMENT
CPACP	COLD PLANE ASPHALT CONCRETE PAVEMENT

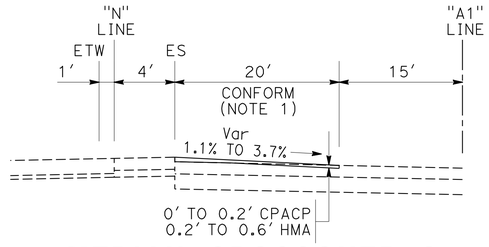

MEDIAN CROSSOVER 2

Sta "A1" 466+00 TO "A1" 479+64

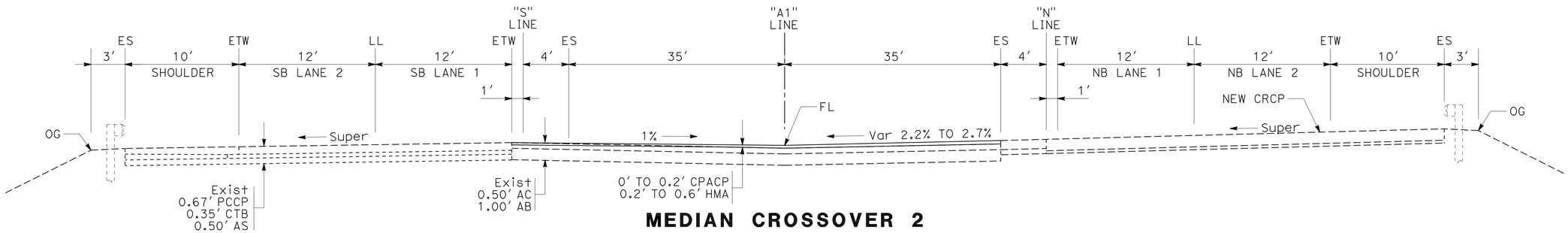

MEDIAN CROSSOVER 2

Sta "A1" 474+51 TO "A1" 479+64

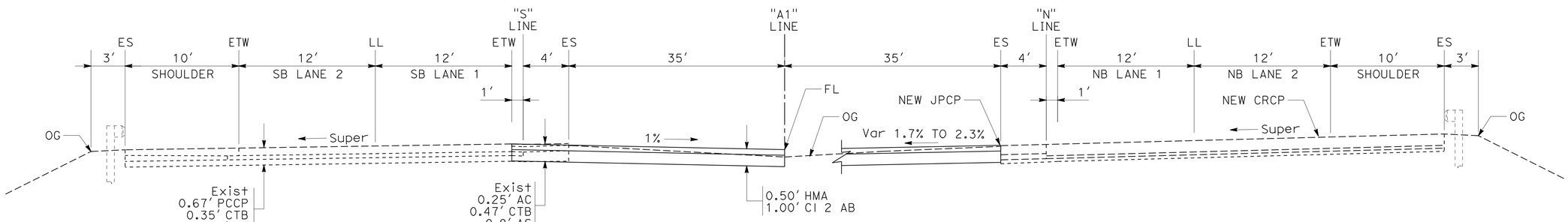

MEDIAN CROSSOVER 2

Sta "A1" 466+00 TO "A1" 474+51

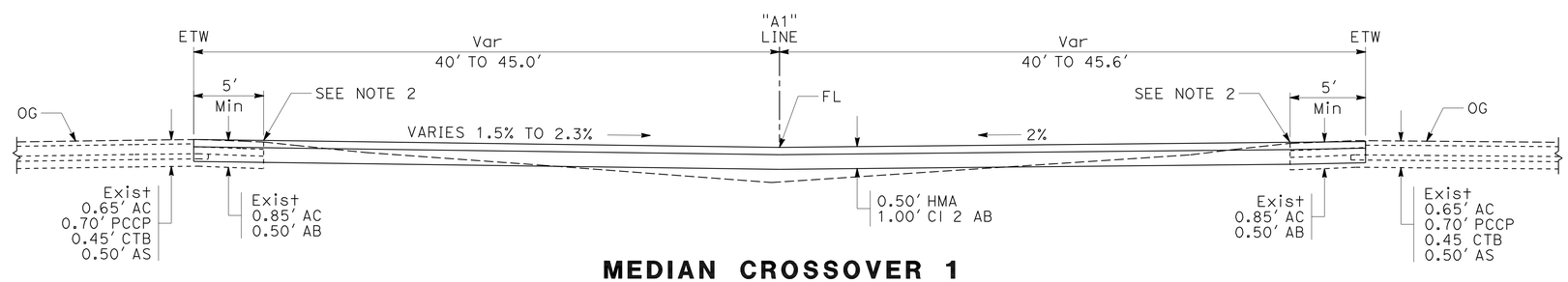

MEDIAN CROSSOVER 1

Sta "A1" 442+00 TO "A1" 451+50

STAGE CONSTRUCTION AND TRAFFIC HANDLING DETAILS

NO SCALE

SCD-1

THIS PLAN ACCURATE FOR STAGE CONSTRUCTION AND TRAFFIC HANDLING WORK ONLY

REVISED BY	DATE REVISED
R. FLOOD	03-26-11
R. WEBER	05-25-11

CALCULATED-DESIGNED BY: RUSSELL FLOOD
CHECKED BY: ROBERT WEBER
FUNCTIONAL SUPERVISOR: STEVE TOPAL

STATE OF CALIFORNIA - DEPARTMENT OF TRANSPORTATION
Caltrans
DESIGN

P:\proj1\02\3E760_plans\pse\23e760mb001.dgn

LAST REVISION 06-14-11
DATE PLOTTED => 17-AUG-2011
TIME PLOTTED => 10:58

Dist	COUNTY	ROUTE	POST MILES TOTAL PROJECT	SHEET No.	TOTAL SHEETS
02	Sis	5	R50.9/R58.2	182	329

Robert Weber 06-14-11
REGISTERED CIVIL ENGINEER DATE

06-15-11
PLANS APPROVAL DATE

REGISTERED PROFESSIONAL ENGINEER ROBERT WEBER No. C62511 Exp. 9-30-11 CIVIL STATE OF CALIFORNIA

THE STATE OF CALIFORNIA OR ITS OFFICERS OR AGENTS SHALL NOT BE RESPONSIBLE FOR THE ACCURACY OR COMPLETENESS OF SCANNED COPIES OF THIS PLAN SHEET.

NOTE:

1. SEE SHEET SDC-8 FOR PLAN VIEW OF CROSSOVER 3.

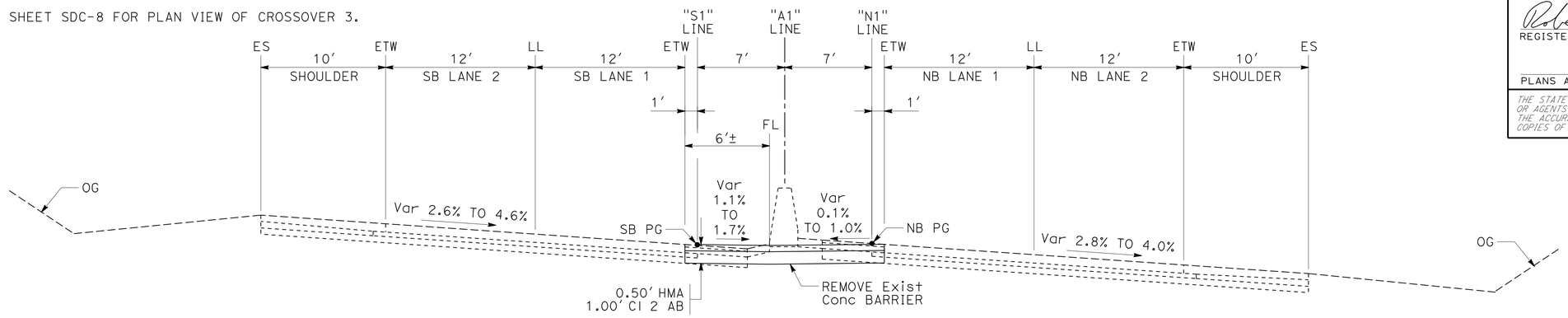

Sta "A1" 568+25 TO "A1" 568+75

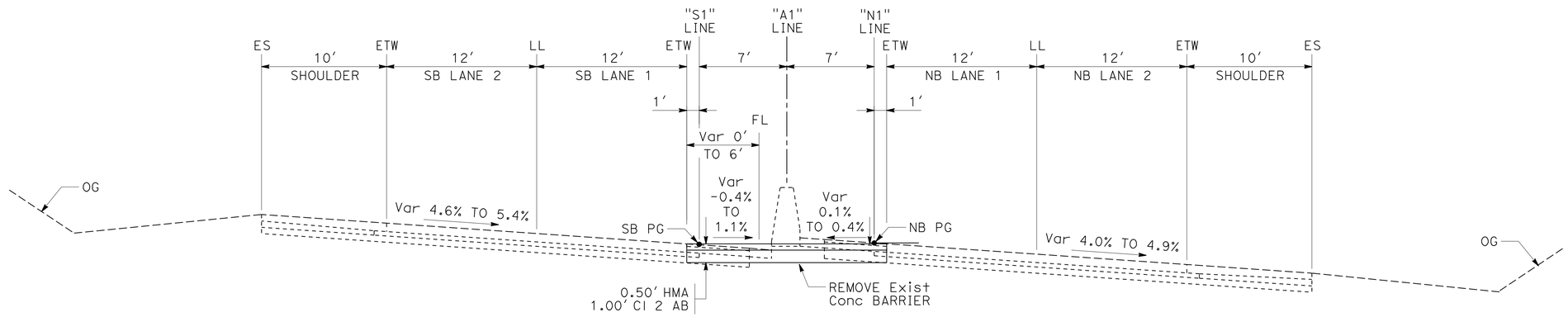

Sta "A1" 568+00 TO "A1" 568+25

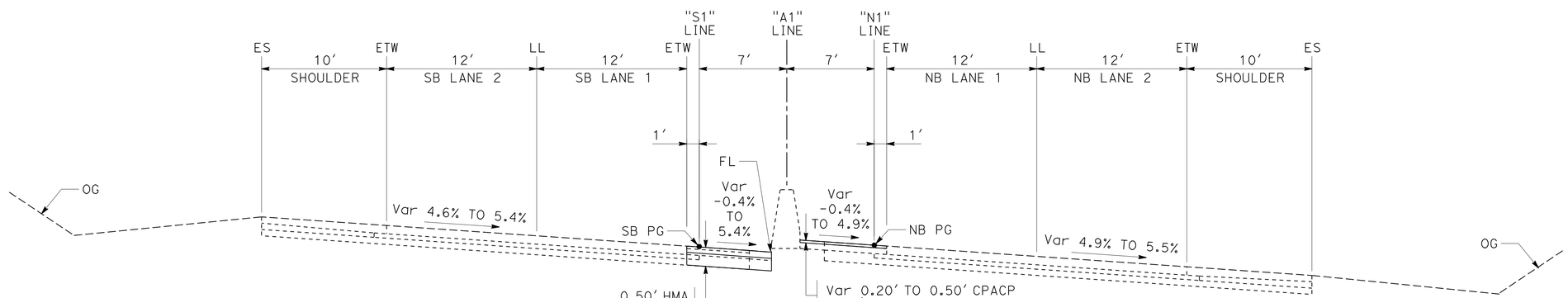

MEDIAN CROSSOVER 3

Sta "A1" 567+75 TO "A1" 568+00

THIS PLAN ACCURATE FOR STAGE CONSTRUCTION AND TRAFFIC HANDLING WORK ONLY

STAGE CONSTRUCTION AND TRAFFIC HANDLING DETAILS

NO SCALE

SCD-2

REVISED BY	DATE REVISED
R. FLOOD	03-29-11
R. WEBER	05-25-11

CALCULATED-DESIGNED BY
CHECKED BY
FUNCTIONAL SUPERVISOR: STEVE TOPAL

STATE OF CALIFORNIA - DEPARTMENT OF TRANSPORTATION
Caltrans® DESIGN

P:\proj1\02\3E760_plans\pse\23e760mb002.dgn

LAST REVISION 06-14-11 | DATE PLOTTED => 17-AUG-2011 | TIME PLOTTED => 10:58

Dist	COUNTY	ROUTE	POST MILES TOTAL PROJECT	SHEET No.	TOTAL SHEETS
02	Sis	5	R50.9/R58.2	183	329

Robert Weber 06-14-11
REGISTERED CIVIL ENGINEER DATE

06-15-11
PLANS APPROVAL DATE

REGISTERED PROFESSIONAL ENGINEER ROBERT WEBER No. C62511 Exp. 9-30-11 CIVIL STATE OF CALIFORNIA

THE STATE OF CALIFORNIA OR ITS OFFICERS OR AGENTS SHALL NOT BE RESPONSIBLE FOR THE ACCURACY OR COMPLETENESS OF SCANNED COPIES OF THIS PLAN SHEET.

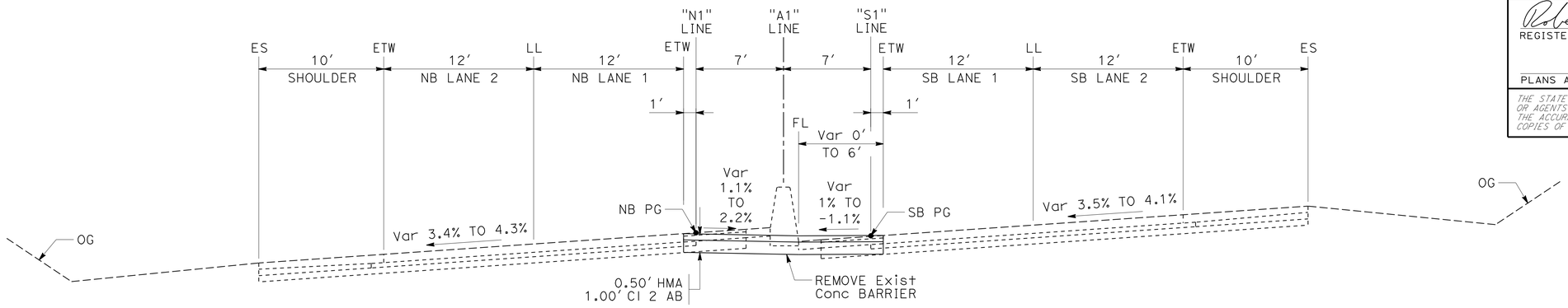

Sta "A1" 571+00 TO "A1" 571+25

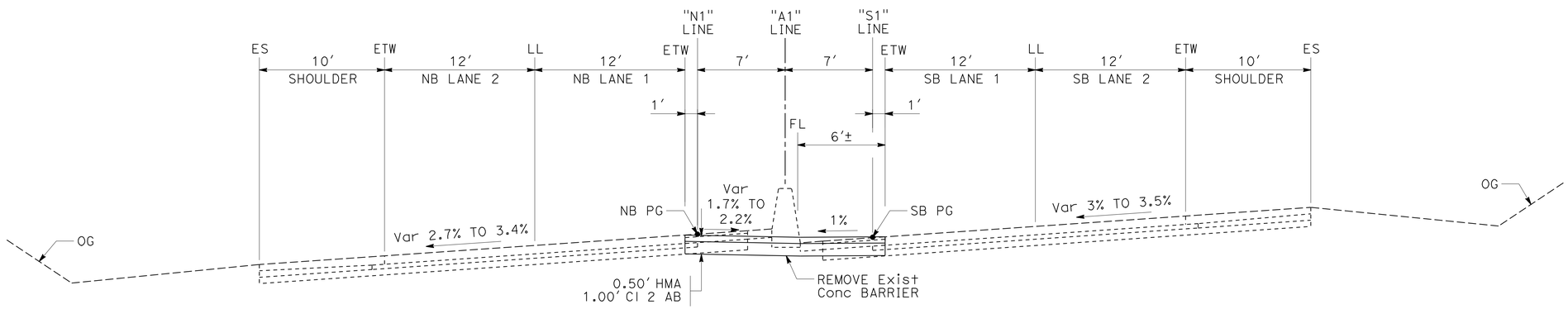

Sta "A1" 570+50 TO "A1" 571+00

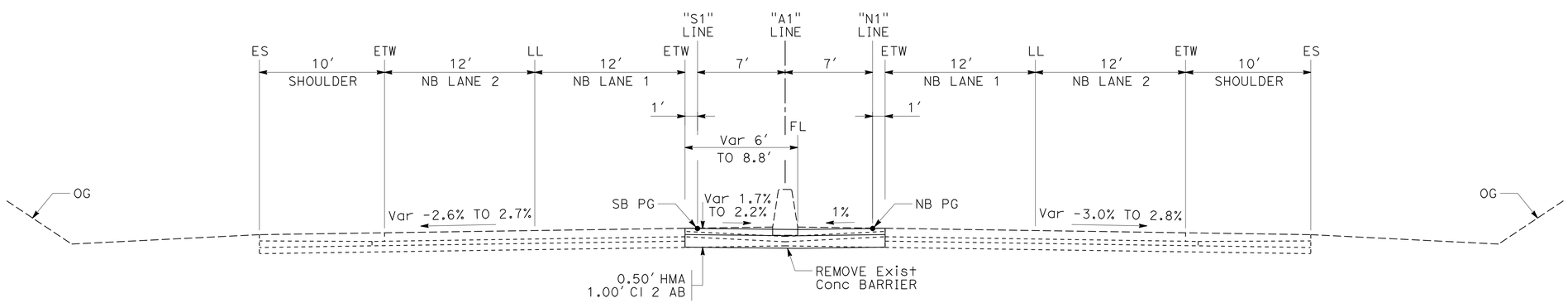

MEDIAN CROSSOVER 3

Sta "A1" 568+75 TO "A1" 570+50

THIS PLAN ACCURATE FOR STAGE CONSTRUCTION AND TRAFFIC HANDLING WORK ONLY

STAGE CONSTRUCTION AND TRAFFIC HANDLING DETAILS

NO SCALE

SCD-3

REVISED BY	DATE REVISED
R. FLOOD	03-30-11
R. WEBER	05-25-11

CALCULATED-DESIGNED BY: RUSSELL FLOOD
CHECKED BY: ROBERT WEBER
FUNCTIONAL SUPERVISOR: STEVE TOPAL

STATE OF CALIFORNIA - DEPARTMENT OF TRANSPORTATION
Caltrans® DESIGN

P:\proj1\02\3E760_plans\pse\23e760mb003.dgn

LAST REVISION 06-14-11 | DATE PLOTTED => 17-AUG-2011 | TIME PLOTTED => 10:58

Dist	COUNTY	ROUTE	POST MILES TOTAL PROJECT	SHEET No.	TOTAL SHEETS
02	Sis	5	R50.9/R58.2	184	329

Robert Weber 06-14-11
REGISTERED CIVIL ENGINEER DATE

06-15-11
PLANS APPROVAL DATE

REGISTERED PROFESSIONAL ENGINEER
ROBERT WEBER
No. C62511
Exp. 9-30-11
CIVIL
STATE OF CALIFORNIA

THE STATE OF CALIFORNIA OR ITS OFFICERS OR AGENTS SHALL NOT BE RESPONSIBLE FOR THE ACCURACY OR COMPLETENESS OF SCANNED COPIES OF THIS PLAN SHEET.

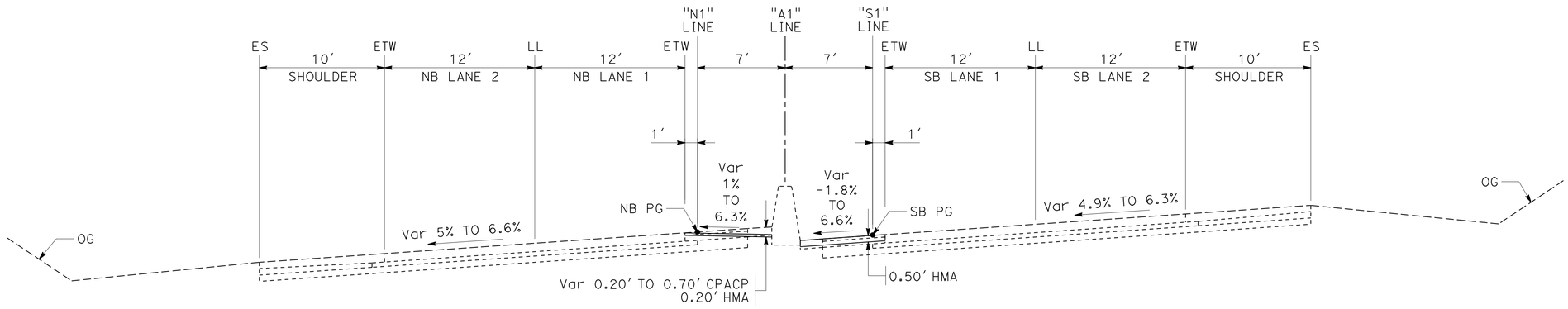

Sta "A1" 571+50 TO "A1" 572+00

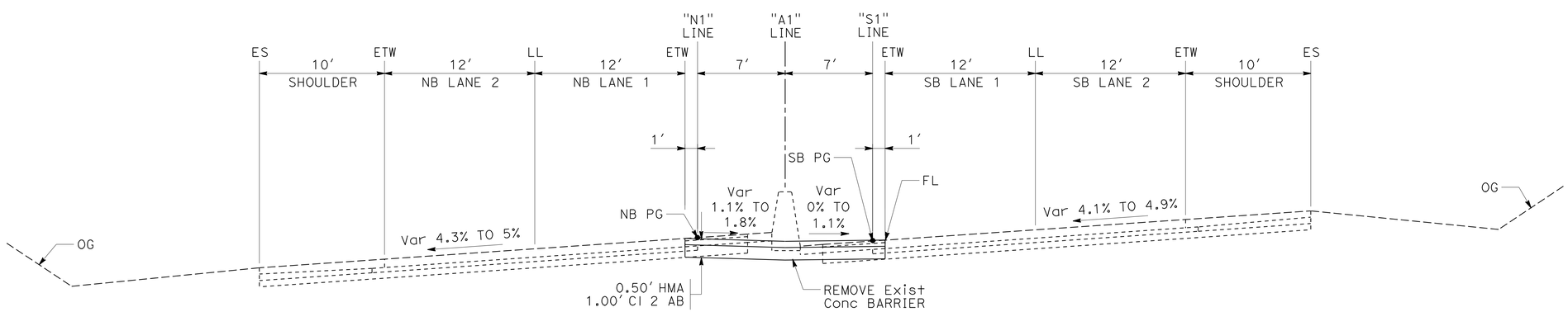

MEDIAN CROSSOVER 3

Sta "A1" 571+25 TO "A1" 571+50

STAGE CONSTRUCTION AND TRAFFIC HANDLING DETAILS

NO SCALE

SCD-4

THIS PLAN ACCURATE FOR STAGE CONSTRUCTION AND TRAFFIC HANDLING WORK ONLY

REVISED BY	DATE REVISED
R. FLOOD	03-30-11
R. WEBER	05-25-11

CALCULATED-DESIGNED BY: RUSSELL FLOOD
CHECKED BY: ROBERT WEBER
FUNCTIONAL SUPERVISOR: STEVE TOPAL

STATE OF CALIFORNIA - DEPARTMENT OF TRANSPORTATION
Caltrans
DESIGN

P:\proj1\02\3E760_plans\pse\23e760mb004.dgn

LAST REVISION 06-14-11 | DATE PLOTTED => 17-AUG-2011 | TIME PLOTTED => 10:58

Dist	COUNTY	ROUTE	POST MILES TOTAL PROJECT	SHEET No.	TOTAL SHEETS
02	Sis	5	R50.9/R58.2	185	329

Robert Weber 06-14-11
REGISTERED CIVIL ENGINEER DATE

06-15-11
PLANS APPROVAL DATE

REGISTERED PROFESSIONAL ENGINEER
ROBERT WEBER
No. C62511
Exp. 9-30-11
CIVIL
STATE OF CALIFORNIA

THE STATE OF CALIFORNIA OR ITS OFFICERS OR AGENTS SHALL NOT BE RESPONSIBLE FOR THE ACCURACY OR COMPLETENESS OF SCANNED COPIES OF THIS PLAN SHEET.

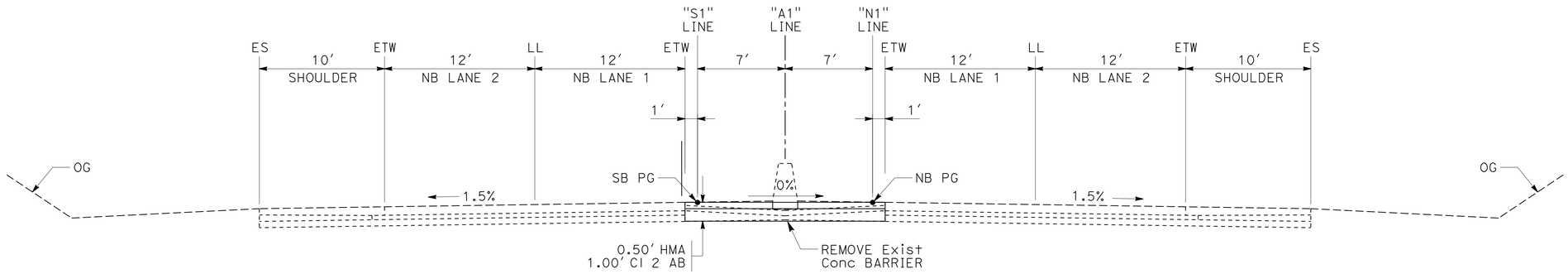

Sta "A1" 703+00 TO "A1" 705+00

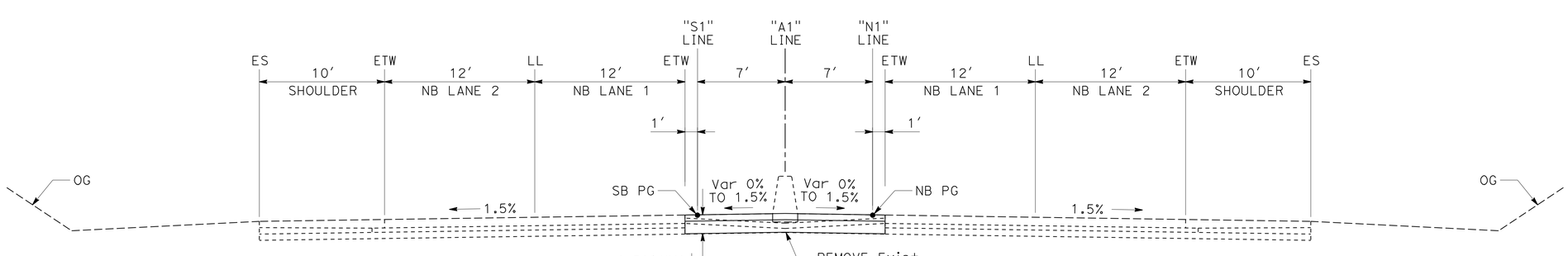

MEDIAN CROSSOVER 4

Sta "A1" 701+00 TO "A1" 703+00
Sta "A1" 705+00 TO "A1" 707+00

STAGE CONSTRUCTION AND TRAFFIC HANDLING DETAILS

NO SCALE

SCD-5

THIS PLAN ACCURATE FOR STAGE CONSTRUCTION AND TRAFFIC HANDLING WORK ONLY

REVISED BY	R. WEBER / R. FLOOD
DATE REVISED	05-25-11 / 03-28-11
CALCULATED-DESIGNED BY	RUSSELL FLOOD
CHECKED BY	ROBERT WEBER
FUNCTIONAL SUPERVISOR	STEVE TOPAL

STATE OF CALIFORNIA - DEPARTMENT OF TRANSPORTATION
Caltrans
DESIGN

P:\proj1\02\3E760_plans\pse\23e760mb005.dgn

LAST REVISION 06-14-11 | DATE PLOTTED => 17-AUG-2011 | TIME PLOTTED => 10:58

Dist	COUNTY	ROUTE	POST MILES TOTAL PROJECT	SHEET No.	TOTAL SHEETS
02	Sis	5	R50.9/R58.2	186	329

Robert Weber 06-14-11
REGISTERED CIVIL ENGINEER DATE

06-15-11
PLANS APPROVAL DATE

REGISTERED PROFESSIONAL ENGINEER ROBERT WEBER No. C62511 Exp. 9-30-11 CIVIL STATE OF CALIFORNIA

THE STATE OF CALIFORNIA OR ITS OFFICERS OR AGENTS SHALL NOT BE RESPONSIBLE FOR THE ACCURACY OR COMPLETENESS OF SCANNED COPIES OF THIS PLAN SHEET.

NOTE:

1. SEE SHEET SCD-9 FOR PLAN VIEW OF CROSSOVER 5.

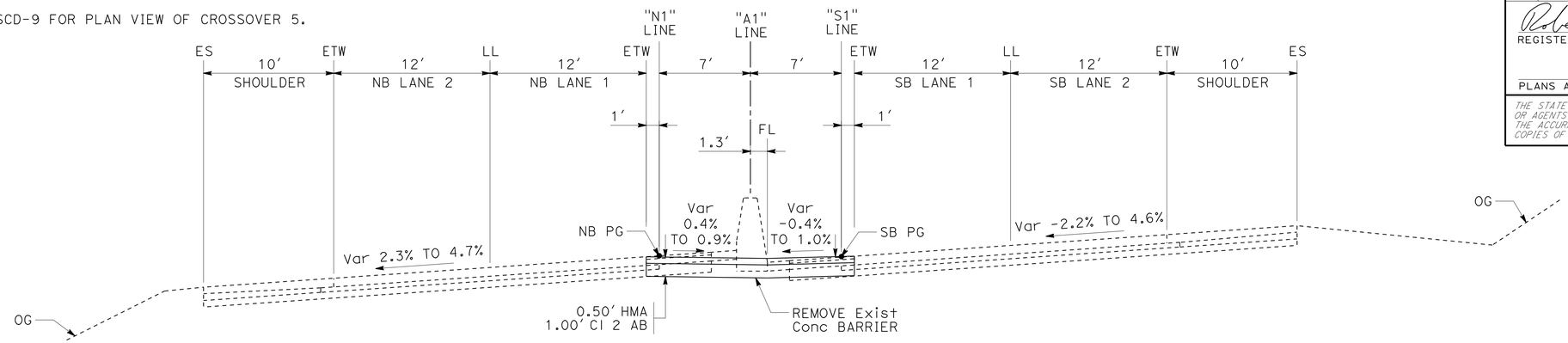

Sta "A1" 805+00 TO "A1" 806+00

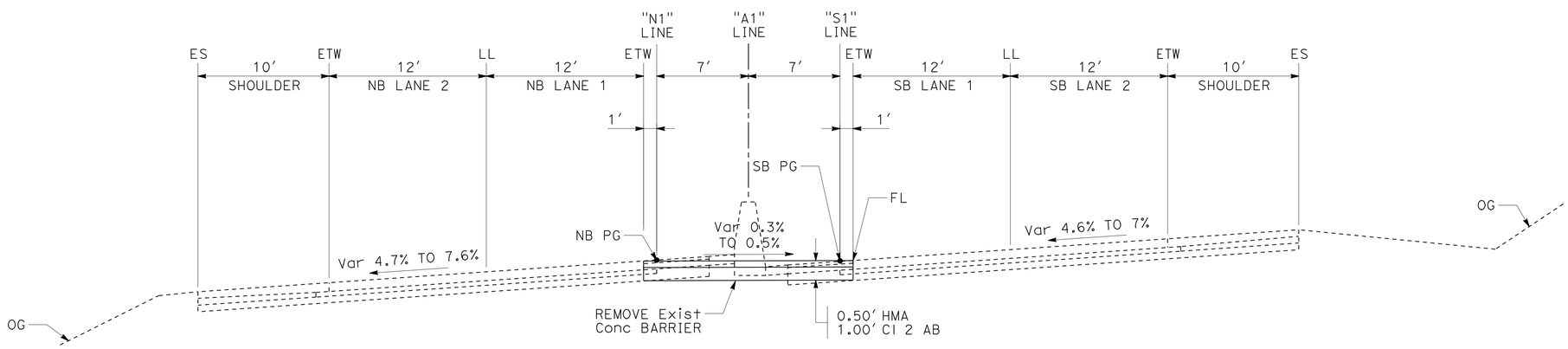

Sta "A1" 803+00 TO "A1" 805+00

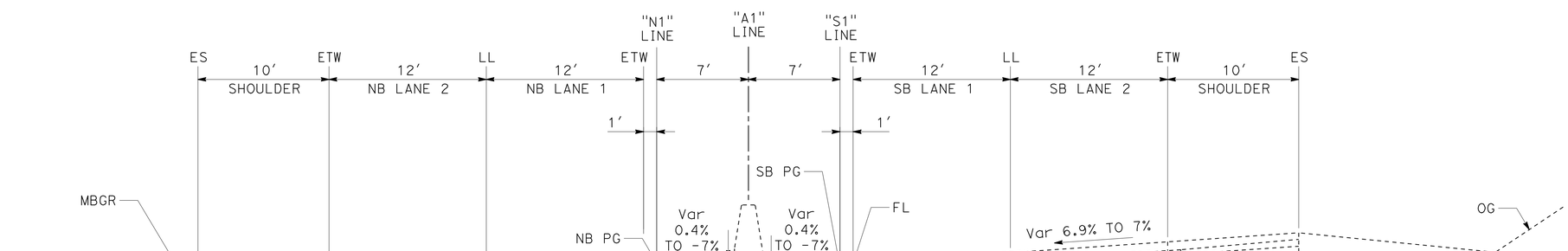

MEDIAN CROSSOVER 5

Sta "A1" 802+75 TO "A1" 803+00

THIS PLAN ACCURATE FOR STAGE CONSTRUCTION AND TRAFFIC HANDLING WORK ONLY

STAGE CONSTRUCTION AND TRAFFIC HANDLING DETAILS

NO SCALE

SCD-6

REVISED BY	DATE REVISED
R. FLOOD	03-29-11
R. WEBER	05-27-11

CALCULATED-DESIGNED BY: RUSSELL FLOOD
CHECKED BY: ROBERT WEBER
FUNCTIONAL SUPERVISOR: STEVE TOPAL

STATE OF CALIFORNIA - DEPARTMENT OF TRANSPORTATION
Caltrans DESIGN

P:\proj1\02\3E760_plans\pse\23e760mb006.dgn

LAST REVISION 06-14-11 | DATE PLOTTED => 17-AUG-2011 | TIME PLOTTED => 10:58

Dist	COUNTY	ROUTE	POST MILES TOTAL PROJECT	SHEET No.	TOTAL SHEETS
02	Sis	5	R50.9/R58.2	187	329

Robert Weber 06-14-11
REGISTERED CIVIL ENGINEER DATE

06-15-11
PLANS APPROVAL DATE

REGISTERED PROFESSIONAL ENGINEER ROBERT WEBER No. C62511 Exp. 9-30-11 CIVIL STATE OF CALIFORNIA

THE STATE OF CALIFORNIA OR ITS OFFICERS OR AGENTS SHALL NOT BE RESPONSIBLE FOR THE ACCURACY OR COMPLETENESS OF SCANNED COPIES OF THIS PLAN SHEET.

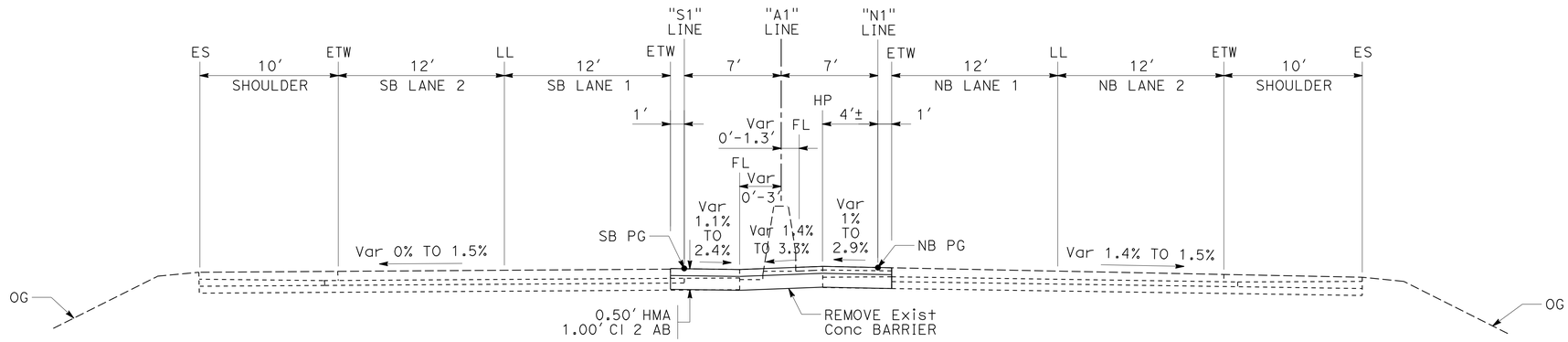

Sta "A1" 813+00 TO "A1" 813+50

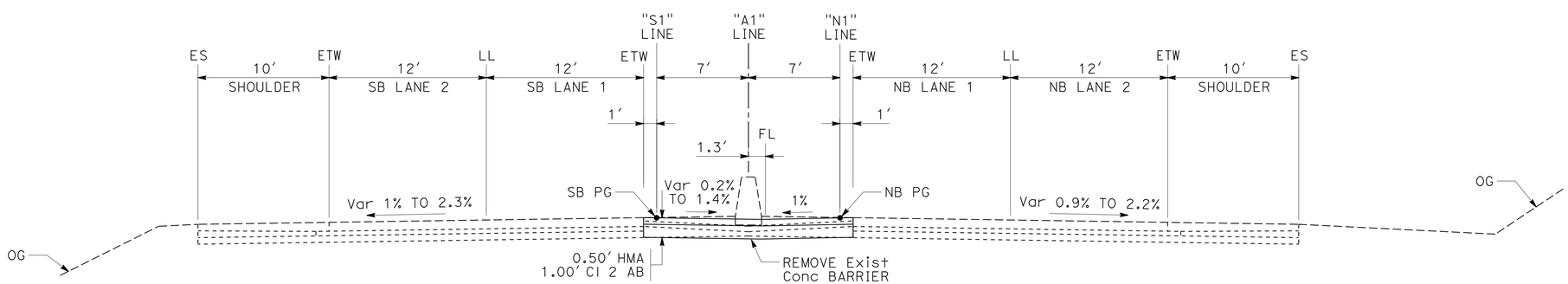

MEDIAN CROSSOVER 5

Sta "A1" 806+00 TO "A1" 813+00

STAGE CONSTRUCTION AND TRAFFIC HANDLING DETAILS

NO SCALE

SCD-7

THIS PLAN ACCURATE FOR STAGE CONSTRUCTION AND TRAFFIC HANDLING WORK ONLY

REVISED BY	DATE REVISED
R. FLOOD	03-29-11
R. WEBER	05-27-11

CALCULATED-DESIGNED BY: RUSSELL FLOOD
CHECKED BY: ROBERT WEBER
FUNCTIONAL SUPERVISOR: STEVE TOPAL

STATE OF CALIFORNIA - DEPARTMENT OF TRANSPORTATION
Caltrans
DESIGN

P:\proj1\02\3E760_plans\pse\23e760mb007.dgn

LAST REVISION 06-14-11 | DATE PLOTTED => 17-AUG-2011 | TIME PLOTTED => 10:58

Dist	COUNTY	ROUTE	POST MILES TOTAL PROJECT	SHEET No.	TOTAL SHEETS
02	Sis	5	R50.9/R58.2	188	329

Robert Weber 06-14-11
REGISTERED CIVIL ENGINEER DATE

06-15-11
PLANS APPROVAL DATE

REGISTERED PROFESSIONAL ENGINEER ROBERT WEBER No. C62511 Exp. 9-30-11 CIVIL STATE OF CALIFORNIA

THE STATE OF CALIFORNIA OR ITS OFFICERS OR AGENTS SHALL NOT BE RESPONSIBLE FOR THE ACCURACY OR COMPLETENESS OF SCANNED COPIES OF THIS PLAN SHEET.

NOTES:

1. THESE NOTES PERTAIN TO SHEETS SCD-8 AND SCD-9.
2. ELEVATIONS GIVEN AT EXISTING FEATURES REPRESENT THE CONDITIONS THAT WILL BE ENCOUNTERED DURING CONSTRUCTION OF CROSSOVERS 3 AND 5.
3. PAVEMENT ELEVATIONS ALONG THE EDGE OF CROSSOVERS WILL CHANGE AS EACH STAGE IS COMPLETED DUE TO DIFFERENCES BETWEEN THE EXISTING AND NEW PROFILE.

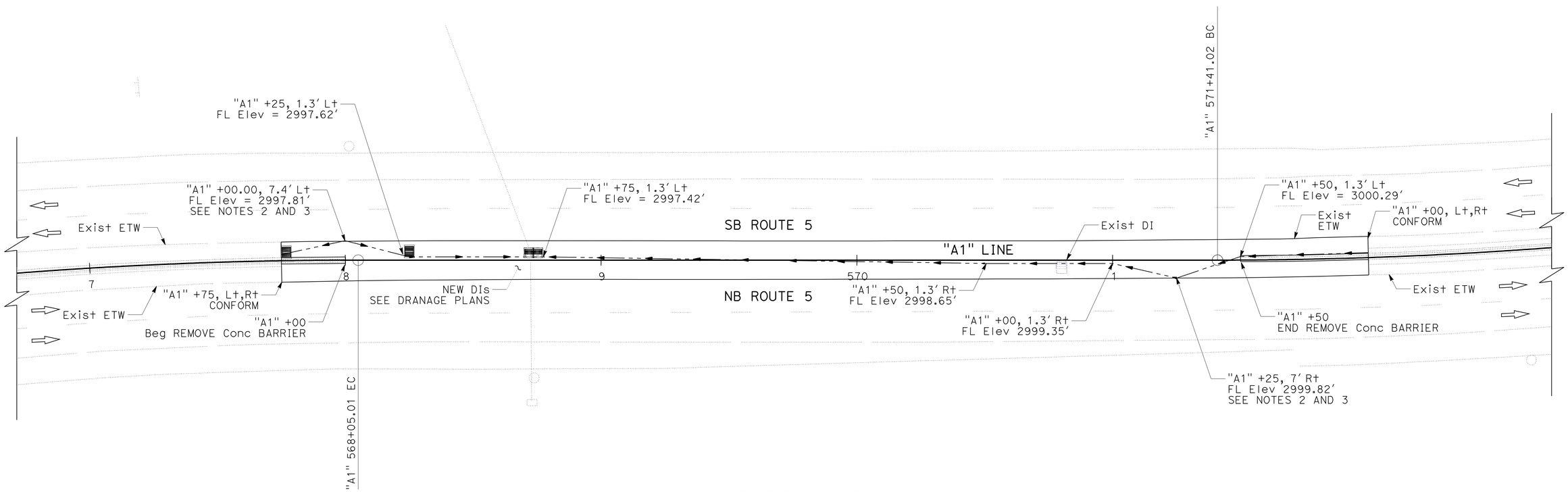

CROSSOVER 3

FLOW LINE ELEVATIONS
"A1" 567+75 TO "A1" 572+00

STAGE CONSTRUCTION AND TRAFFIC HANDLING DETAILS

SCALE: 1" = 20'

SCD-8

THIS PLAN ACCURATE FOR STAGE CONSTRUCTION AND TRAFFIC HANDLING WORK ONLY

REVISED BY	R. WEBER
DATE REVISED	06-01-11
CALCULATED-DESIGNED BY	WILL LESLIE
CHECKED BY	RUSSELL FLOOD
FUNCTIONAL SUPERVISOR	STEVE TOPAL

STATE OF CALIFORNIA - DEPARTMENT OF TRANSPORTATION
Caltrans
DESIGN

P:\proj\02\3E760_plans\pse\23e760mb008.dgn

LAST REVISION 06-14-11 | DATE PLOTTED => 17-AUG-2011 | TIME PLOTTED => 10:58

Dist	COUNTY	ROUTE	POST MILES TOTAL PROJECT	SHEET No.	TOTAL SHEETS
02	Sis	5	R50.9/R58.2	189	329

Robert Weber 06-14-11
REGISTERED CIVIL ENGINEER DATE

06-15-11
PLANS APPROVAL DATE

REGISTERED PROFESSIONAL ENGINEER
ROBERT WEBER
No. C62511
Exp. 9-30-11
CIVIL
STATE OF CALIFORNIA

THE STATE OF CALIFORNIA OR ITS OFFICERS OR AGENTS SHALL NOT BE RESPONSIBLE FOR THE ACCURACY OR COMPLETENESS OF SCANNED COPIES OF THIS PLAN SHEET.

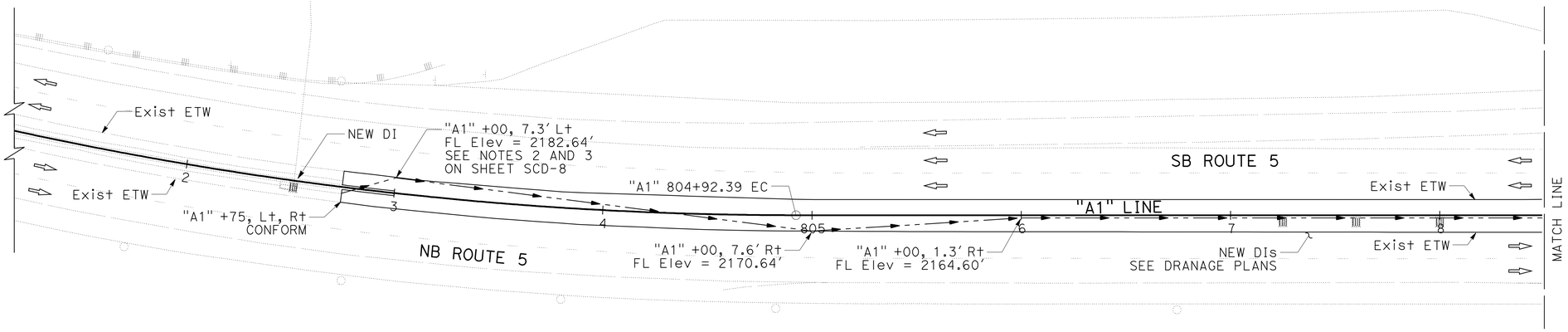

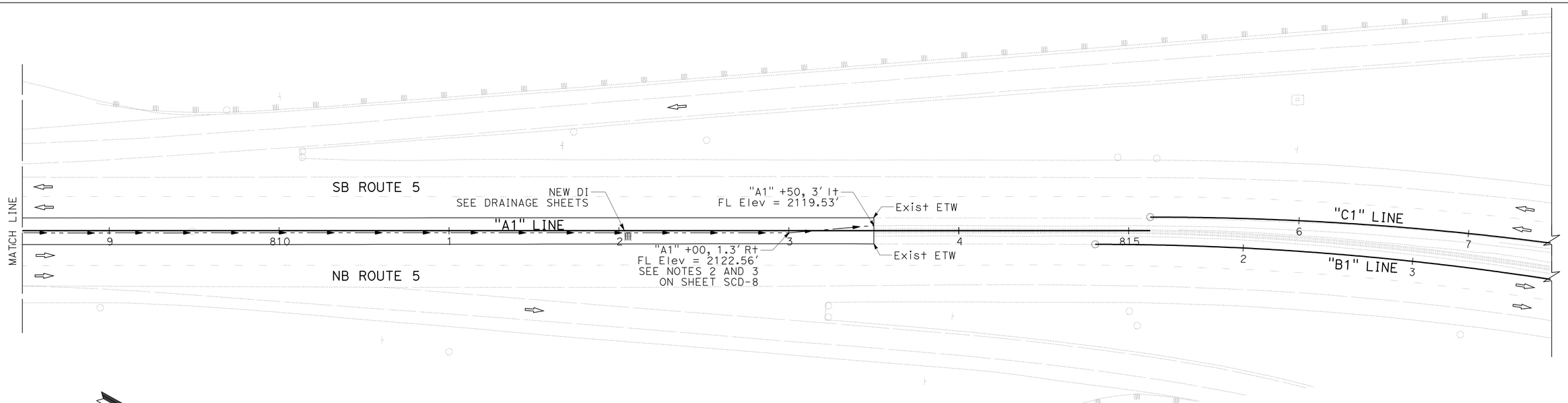

CROSSOVER 5

FLOW LINE ELEVATIONS
"A1 802+75 TO "A1" 813+50

STAGE CONSTRUCTION AND TRAFFIC HANDLING DETAILS

SCALE: 1" = 30'

SCD-9

THIS PLAN ACCURATE FOR STAGE CONSTRUCTION AND TRAFFIC HANDLING WORK ONLY

REVISED BY	DATE REVISED
WILL LESLIE	06-01-11
RUSSELL FLOOD	R. WEBER

CALCULATED-DESIGNED BY
CHECKED BY

FUNCTIONAL SUPERVISOR: STEVE TOPAL

STATE OF CALIFORNIA - DEPARTMENT OF TRANSPORTATION
Caltrans
DESIGN

P:\proj1\02\3E760_plans\pse\23e760mb009.dgn

LAST REVISION 06-14-11 | DATE PLOTTED => 17-AUG-2011 | TIME PLOTTED => 10:58

Dist	COUNTY	ROUTE	POST MILES TOTAL PROJECT	SHEET No.	TOTAL SHEETS
02	Sis	5	R50.9/R58.2	190	329

Robert Weber 06-14-11
REGISTERED CIVIL ENGINEER DATE

06-15-11
PLANS APPROVAL DATE

REGISTERED PROFESSIONAL ENGINEER ROBERT WEBER No. C62511 Exp. 9-30-11 CIVIL STATE OF CALIFORNIA

THE STATE OF CALIFORNIA OR ITS OFFICERS OR AGENTS SHALL NOT BE RESPONSIBLE FOR THE ACCURACY OR COMPLETENESS OF SCANNED COPIES OF THIS PLAN SHEET.

NOTES:

1. CROSSOVER 3 IN STAGE 1A CONFIGURATION, SHOWN BELOW, PROVIDES AN EXAMPLE OF THE CONDITIONS THAT WILL BE ENCOUNTERED AT EACH CROSSOVER AT THE COMPLETION OF EACH STAGE.
2. CONSTRUCTION OF THE MEDIAN SHOULDER DURING EACH STAGE WILL STOP AT THE BEGINNING OF THE CROSSOVER, THEN RESUME AT THE END OF THE CROSSOVER AT THE NEXT STAGE. THE MEDIAN SHOULDER ALONG THE CROSSOVERS WILL BE COMPLETED IN STAGE 4A.
3. PLACEMENT OF THE CRCP DURING EACH STAGE MUST BE COMPLETED AS FAR THE DESIGNATED STATION IN ORDER TO PROVIDE ADEQUATE PAVEMENT TO SET UP THE CROSSOVER FOR THE NEXT STAGE.
4. MINIMUM WORKING ROOM BETWEEN THE EDGE OF THE CRCP AND K-RAIL IS APPROXIMATELY 4 FEET AT CROSSOVERS 3 AND 5, INCREASING TO 6.5 FEET AT CROSSOVER 4.

STAGE TRANSITION LOCATIONS

CROSSOVER NUMBER	STAGE	STATION	Temp END JPCP	Temp END CRCP	BEGIN JPCP	BEGIN CONFORM CROSSOVER	END CONFORM CROSSOVER
3	1A	"A1" 567+75, R+	X			X	
3	1A	"A1" 569+40, R+		X			X
3	1B	"A1" 569+40, R+				X	
3	1B	"A1" 572+00, R+			X		X
3	3B	"A1" 572+00, L+	X			X	
3	3B	"A1" 569+82, L+		X			X
3	3C	"A1" 569+82, L+				X	
3	3C	"A1" 567+75, L+			X		X

STAGE TRANSITION LOCATIONS

CROSSOVER NUMBER	STAGE	STATION RANGE	Temp END JPCP	Temp END CRCP	BEGIN JPCP	BEGIN CONFORM CROSSOVER	END CONFORM CROSSOVER
4	1B	"A1" 701+00, R+	X			X	
4	1B	"A1" 704+00, R+		X			X
4	1C	"A1" 704+00, R+				X	
4	1C	"A1" 707+00, R+			X		X
4	3A	"A1" 707+00, L+	X			X	
4	3A	"A1" 704+00, L+		X			X
4	3B	"A1" 704+00, L+				X	
4	3B	"A1" 701+00, L+			X		X
5	1C	"A1" 802+75, R+	X			X	
5	1C	"A1" 806+50, R+		X			X
5	2A	"A1" 806+50, R+				X	
5	2A	"A1" 813+50, R+			X		X
5	2A	"A1" 813+50, L+	X			X	
5	2A	"A1" 802+75, L+					X
-	2A	"A1" 802+00, L+		X			
-	2B	"A1" 813+50, R+		X			
-	2B	"A1" 805+00, L+		X			
-	2B	"A1" 802+00, L+		X			
5	3A	"A1" 802+75, L+			X		

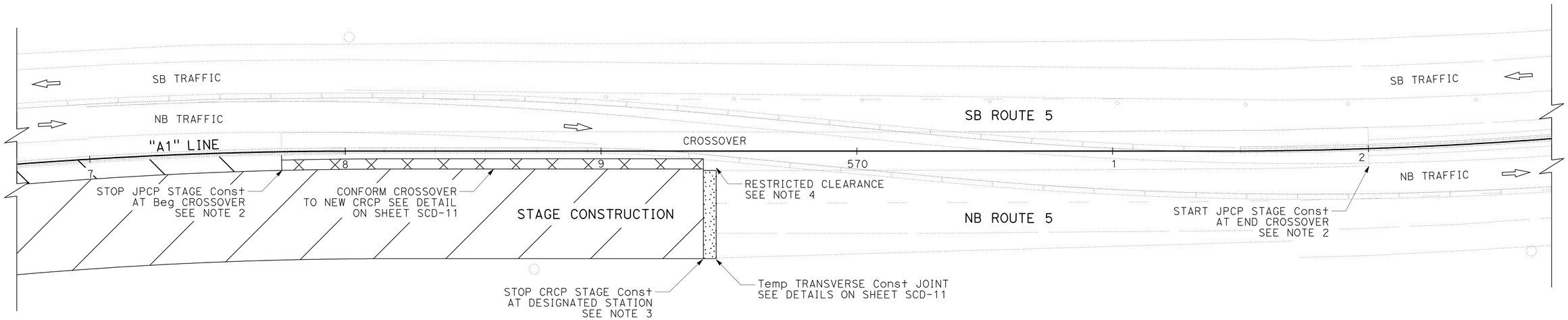

CROSSOVERS 3-5

STAGES 1A-3C
TYPICAL CONDITIONS
TEMPORARY TRANSVERSE CONSTRUCTION JOINT
CONFORM CROSSOVER TO NEW CRCP
"A1" 567+75 TO "A1" 813+50

STAGE CONSTRUCTION AND TRAFFIC HANDLING DETAILS

SCALE: 1" = 20'

SCD-10

THIS PLAN ACCURATE FOR STAGE CONSTRUCTION AND TRAFFIC HANDLING WORK ONLY

ROBERT WEBER — REVISED BY — R. WEBER
RUSSELL FLOOD — DATE REVISED — 05-31-11
CALCULATED-DESIGNED BY
CHECKED BY
FUNCTIONAL SUPERVISOR — STEVE TOPAL

STATE OF CALIFORNIA - DEPARTMENT OF TRANSPORTATION
Caltrans® DESIGN

P:\proj1\02\3E760_plans\pse\23e760mb010.dgn

LAST REVISION 06-14-11 | DATE PLOTTED => 17-AUG-2011 | TIME PLOTTED => 10:58

Dist	COUNTY	ROUTE	POST MILES TOTAL PROJECT	SHEET No.	TOTAL SHEETS
02	Sis	5	R50.9/R58.2	191	329

Robert Weber 06-14-11
REGISTERED CIVIL ENGINEER DATE

06-15-11
PLANS APPROVAL DATE

REGISTERED PROFESSIONAL ENGINEER ROBERT WEBER No. C62511 Exp. 9-30-11 CIVIL STATE OF CALIFORNIA

THE STATE OF CALIFORNIA OR ITS OFFICERS OR AGENTS SHALL NOT BE RESPONSIBLE FOR THE ACCURACY OR COMPLETENESS OF SCANNED COPIES OF THIS PLAN SHEET.

NOTES:

1. LAP STEEL 4′ MINIMUM. SEE SHEET C-2 FOR ADDITIONAL REINFORCEMENT REQUIREMENTS.
2. CHECK IN FIELD, IF NECESSARY INCREASE LENGTH OF CONSTRUCTION JOINT TO 50d′.
3. PLACE 90 LB ROOFING FELT ALONG END OF CRCP AND ON HMA BASE AS BOND BREAKER TO FACILITATE JOINT REMOVAL.
4. PLACE PIPE INSULATION ON REBAR AS BOND BREAKER TO FACILITATE JOINT REMOVAL.
5. WHERE h′ IS LESS THAN 0.1′, WIDTH OF CPACP MAY BE REDUCED TO 4′.

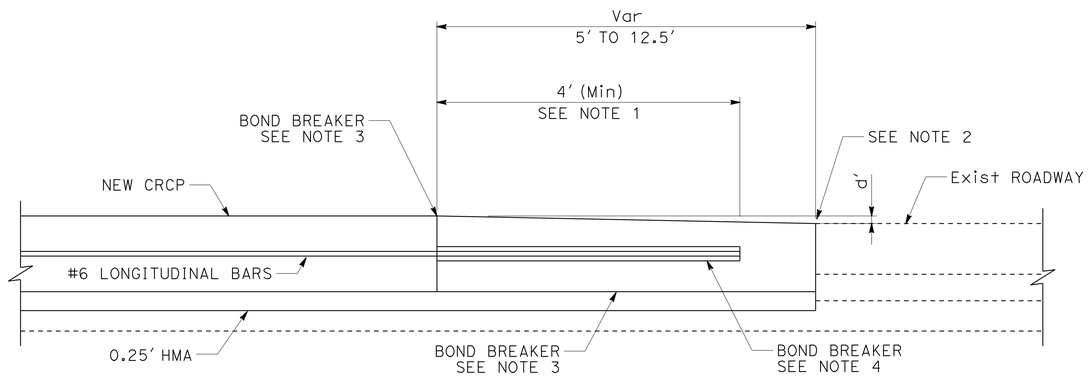

SECTION VIEW
TYPICAL CONDITION

TEMPORARY TRANSVERSE CONSTRUCTION JOINTS

CROSSOVER NUMBER	STAGE	STATION	LENGTH FT	WIDTH FT
3	1A	"A1" 569+40, R+	5	35
3	3B	"A1" 569+82, L+	12.5	35
4	1B	"A1" 704+00, R+	5	35
4	3A	"A1" 704+00, L+	5	35
5	1C	"A1" 806+50, R+	5	35
5	2A	"A1" 802+00, 7′-20′ L+	5	13
5	2B	"A1" 802+00, 20′-47.5′ L+	5	27.5

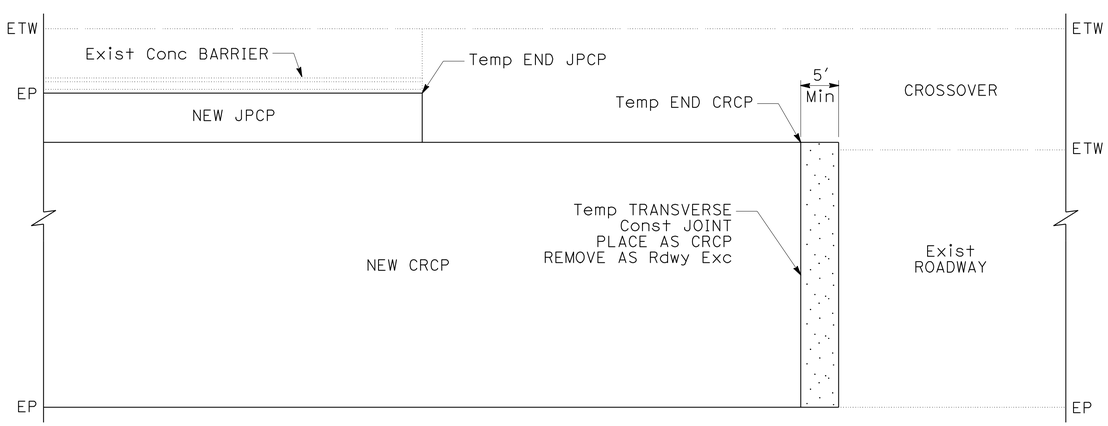

TEMPORARY TRANSVERSE CONSTRUCTION JOINT

PLAN VIEW
TYPICAL CONDITION

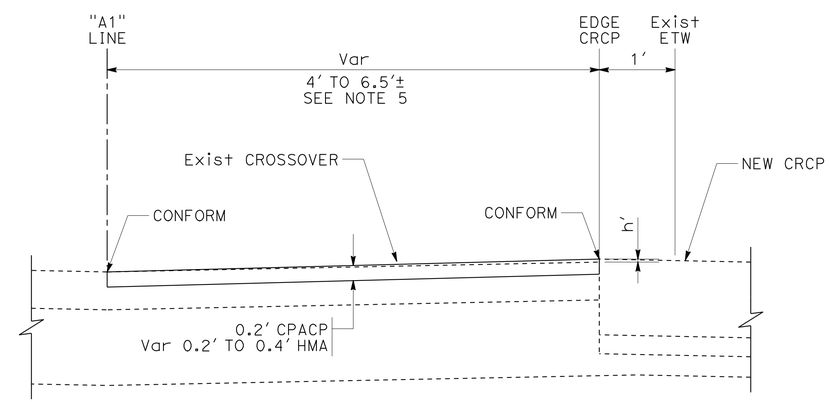

CONFORM CROSSOVER TO NEW CRCP

SECTION VIEW
TYPICAL CONDITION

STAGE CONSTRUCTION AND TRAFFIC HANDLING DETAILS

NO SCALE

SCD-11

THIS PLAN ACCURATE FOR STAGE CONSTRUCTION AND TRAFFIC HANDLING WORK ONLY

REVISED BY	DATE REVISED
R. WEBER	06-09-11

ROBERT WEBER — CALCULATED-DESIGNED BY
TOBY CRAWFORD — CHECKED BY
STEVE TOPAL — FUNCTIONAL SUPERVISOR

STATE OF CALIFORNIA - DEPARTMENT OF TRANSPORTATION
Caltrans
DESIGN

P:\proj1\02\3E760_plans\pse\23e760mb011.dgn

LAST REVISION 06-14-11 | DATE PLOTTED => 17-AUG-2011 | TIME PLOTTED => 10:59

Dist	COUNTY	ROUTE	POST MILES TOTAL PROJECT	SHEET No.	TOTAL SHEETS
02	Sis	5	R50.9/R58.2	192	329

Robert Weber 06-14-11
REGISTERED CIVIL ENGINEER DATE

06-15-11
PLANS APPROVAL DATE

REGISTERED PROFESSIONAL ENGINEER ROBERT WEBER No. C62511 Exp. 9-30-11 CIVIL STATE OF CALIFORNIA

THE STATE OF CALIFORNIA OR ITS OFFICERS OR AGENTS SHALL NOT BE RESPONSIBLE FOR THE ACCURACY OR COMPLETENESS OF SCANNED COPIES OF THIS PLAN SHEET.

NOTES:

1. ALL DIMENSIONS GIVEN FOR TEMPORARY RAILING (TYPE K) ARE AT TOE, CLOSEST TO TRAFFIC.
2. MINIMUM TAPER FOR FLARED SECTIONS OF TEMPORARY RAILING (TYPE K) TO BE 10:1.
3. EXACT LOCATIONS OF PORTABLE LIGHTING SYSTEM TO BE APPROVED BY THE ENGINEER. LIGHT GLARE IS NOT TO IMPEDE VISION OF APPROACHING MOTORISTS.
4. OBJECT MARKER (TYPE P) REQUIRED FOR TEMPORARY RAILING (TYPE K) PER THE STANDARD SPECIFICATIONS.

LEGEND

- CHANNELIZER (SURFACE MOUNTED)
- DIRECTION OF TRAVEL
- SINGLE STRIPE MARKER
- STRIPE CHANGE LOCATION
- nn — Temp PAVEMENT DELINETION STRIPE DETAIL No.
- Temp RAILING (TYPE K)
- WORK AREA
- PORTABLE LIGHTING SYSTEM
- Temp SIGN (STATIONARY MOUNTED)

ABBREVIATIONS

TS	TRAFFIC STRIPE
YTTS	YELLOW THERMOPLASTIC TRAFFIC STRIPE
TCC	TEMPORARY CRASH CUSHION (ALTERNATIVE IN-LINE)

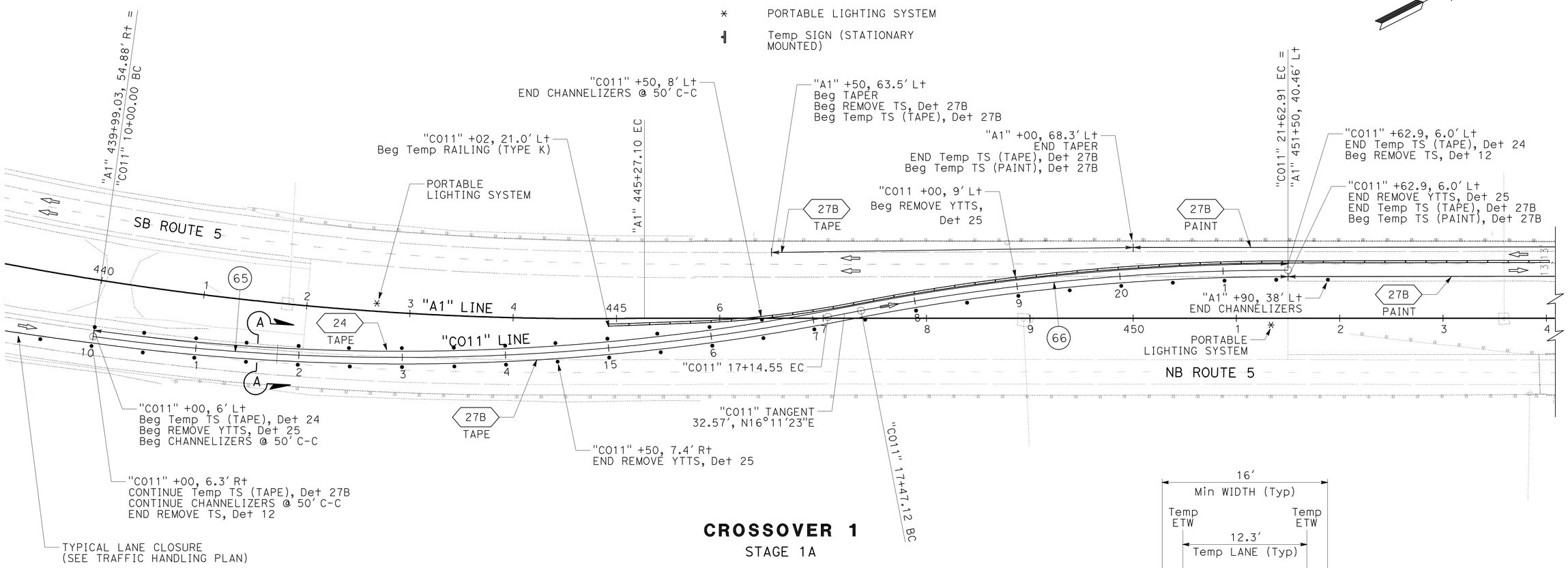

CROSSOVER 1

STAGE 1A

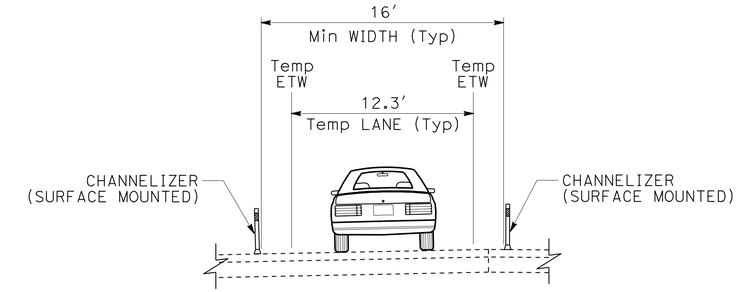

SECTION A-A

"C011" 10+00 TO "C011" 16+50
TYPICAL PLACEMENT OF CHANNELIZERS

CURVE DATA

No. ⊕	R	Δ	T	L
65	2200'	18°36'45"	360.51'	714.67'
66	2200'	10°49'43"	208.52'	415.79'

STAGE CONSTRUCTION AND TRAFFIC HANDLING DETAILS

SCALE: 1" = 50'

THIS PLAN ACCURATE FOR STAGE CONSTRUCTION AND TRAFFIC HANDLING WORK ONLY

SCD-12

REVISED BY	DATE REVISED
R. FLOOD	03-30-11
R. WEBER	06-06-11

CALCULATED-DESIGNED BY: ROBERT WEBER
CHECKED BY: RUSSELL FLOOD
FUNCTIONAL SUPERVISOR: STEVE TOPAL

STATE OF CALIFORNIA - DEPARTMENT OF TRANSPORTATION
Caltrans® DESIGN

P:\proj1\02\3E760_plans\pse\23e760mb012.dgn

LAST REVISION 06-14-11 | DATE PLOTTED => 17-AUG-2011 | TIME PLOTTED => 10:59

Dist	COUNTY	ROUTE	POST MILES TOTAL PROJECT	SHEET No.	TOTAL SHEETS
02	Sis	5	R50.9/R58.2	193	329

Robert Weber 06-14-11
REGISTERED CIVIL ENGINEER DATE

06-15-11
PLANS APPROVAL DATE

REGISTERED PROFESSIONAL ENGINEER ROBERT WEBER No. C62511 Exp. 9-30-11 CIVIL STATE OF CALIFORNIA

THE STATE OF CALIFORNIA OR ITS OFFICERS OR AGENTS SHALL NOT BE RESPONSIBLE FOR THE ACCURACY OR COMPLETENESS OF SCANNED COPIES OF THIS PLAN SHEET.

NOTES:

1. EXACT LOCATIONS OF PORTABLE LIGHTING SYSTEM TO BE APPROVED BY THE ENGINEER. LIGHT GLARE IS NOT TO IMPEDE VISION OF APPROACHING MOTORISTS.
2. PLACE W1-4R SIGN 500 FEET AHEAD OF CROSSOVER.

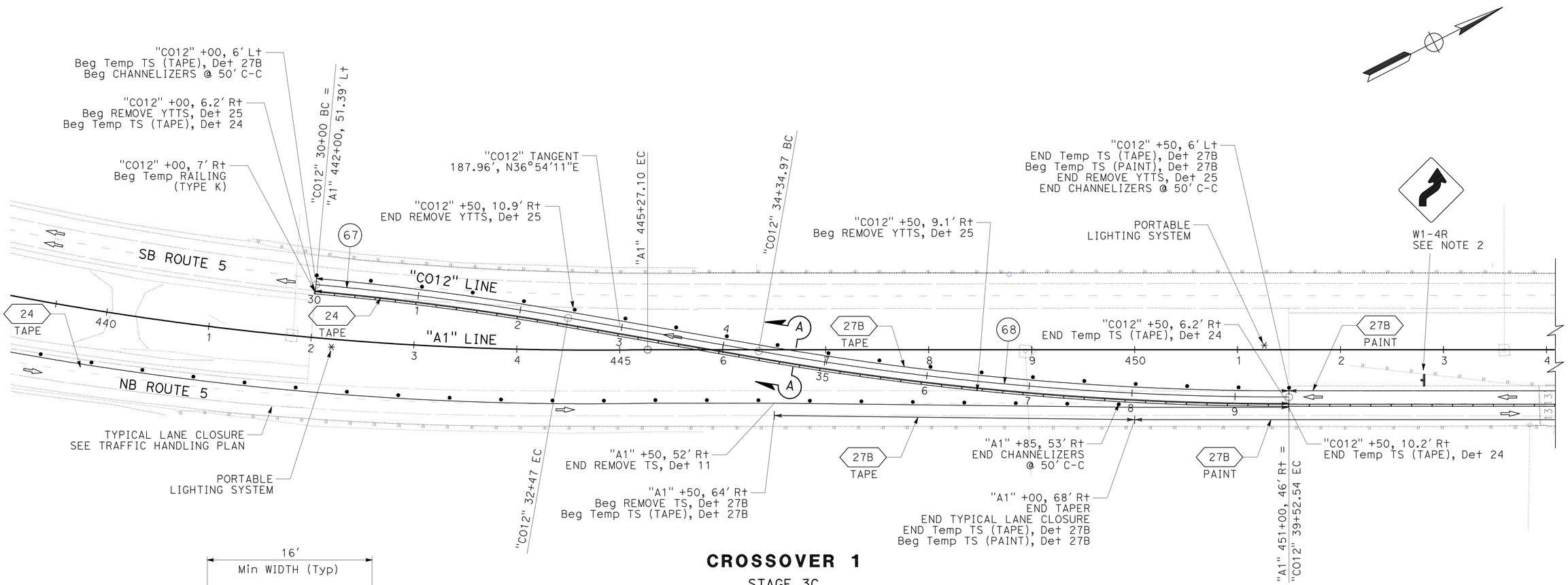

CROSSOVER 1

STAGE 3C

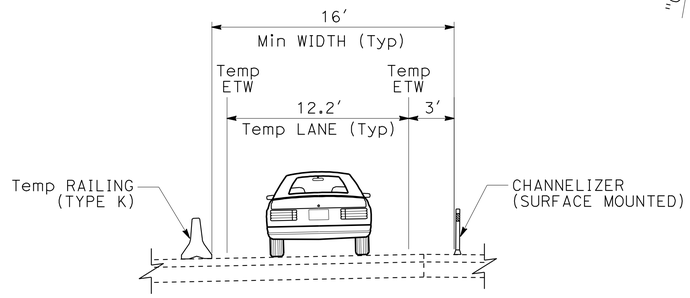

SECTION A-A

"CO12" 30+00 TO "CO12" 39+52
TYPICAL PLACEMENT OF
Temp RAILING (TYPE K) AND CHANNELIZERS

CURVE DATA

No. ⊕	R	Δ	T	L
67	3000′	4°43′03"	123.57′	247.01′
68	3000′	9°53′06"	259.43′	517.58′

STAGE CONSTRUCTION AND TRAFFIC HANDLING DETAILS

SCALE: 1" = 50′

SCD-13

THIS PLAN ACCURATE FOR STAGE CONSTRUCTION AND TRAFFIC HANDLING WORK ONLY

REVISED BY	DATE REVISED
R. FLOOD	03-30-11
R. WEBER	06-07-11

CALCULATED-DESIGNED BY: ROBERT WEBER
CHECKED BY: RUSSELL FLOOD
FUNCTIONAL SUPERVISOR: STEVE TOPAL

STATE OF CALIFORNIA - DEPARTMENT OF TRANSPORTATION
Caltrans
DESIGN

P:\proj1\02\3E760_plans\pse\23e760mb013.dgn

LAST REVISION 06-14-11 | DATE PLOTTED => 17-AUG-2011 | TIME PLOTTED => 10:59

Dist	COUNTY	ROUTE	POST MILES TOTAL PROJECT	SHEET No.	TOTAL SHEETS
02	Sis	5	R50.9/R58.2	194	329

Robert Weber 06-14-11
REGISTERED CIVIL ENGINEER DATE

06-15-11
PLANS APPROVAL DATE

REGISTERED PROFESSIONAL ENGINEER ROBERT WEBER No. C62511 Exp. 9-30-11 CIVIL STATE OF CALIFORNIA

THE STATE OF CALIFORNIA OR ITS OFFICERS OR AGENTS SHALL NOT BE RESPONSIBLE FOR THE ACCURACY OR COMPLETENESS OF SCANNED COPIES OF THIS PLAN SHEET.

NOTES:

1. EXACT LOCATIONS OF PORTABLE LIGHTING SYSTEM TO BE APPROVED BY THE ENGINEER. LIGHT GLARE IS NOT TO IMPEDE VISION OF APPROACHING MOTORISTS.
2. PLACE W1-4R SIGN 500 FEET AHEAD OF CROSSOVER.

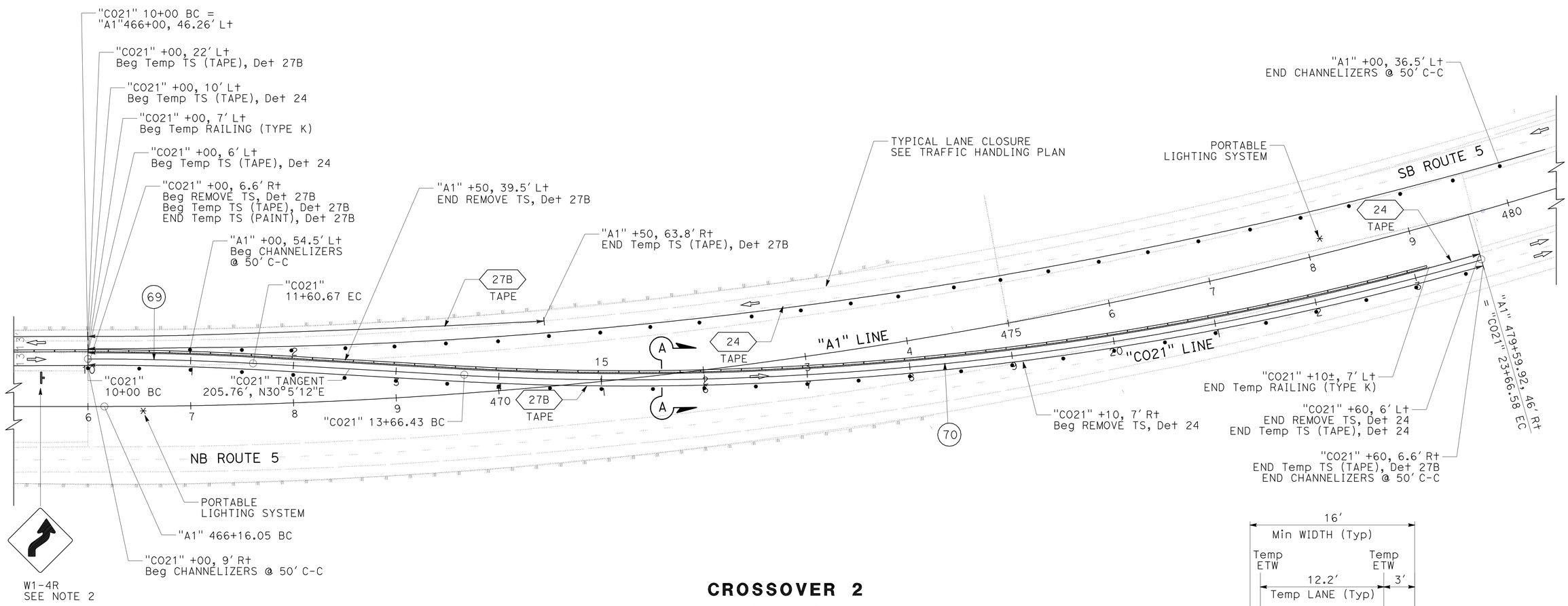

CROSSOVER 2

STAGE 1B

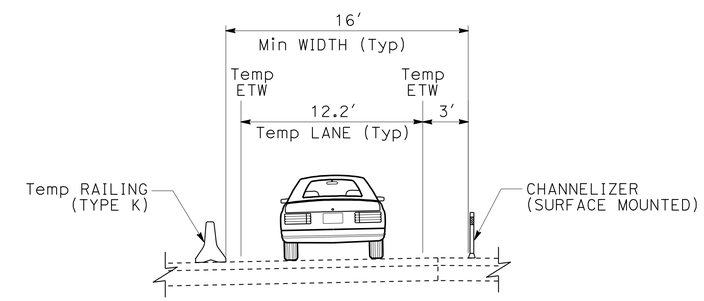

SECTION A-A

"CO21" 310+00 TO "CO21" 23+66
TYPICAL PLACEMENT OF
Temp RAILING (TYPE K) AND CHANNELIZERS

CURVE DATA

No. ⊕	R	Δ	T	L
69	3000'	3°18'12"	86.51'	172.97'
70	3000'	19°20'41"	511.31'	1012.88'

STAGE CONSTRUCTION AND TRAFFIC HANDLING DETAILS

SCALE: 1" = 50'

SCD-14

THIS PLAN ACCURATE FOR STAGE CONSTRUCTION AND TRAFFIC HANDLING WORK ONLY

REVISED BY	DATE REVISED
R. FLOOD	03-30-11
R. WEBER	06-07-11

CALCULATED-DESIGNED BY: ROBERT WEBER
CHECKED BY: RUSSELL FLOOD
FUNCTIONAL SUPERVISOR: STEVE TOPAL

STATE OF CALIFORNIA - DEPARTMENT OF TRANSPORTATION
Caltrans
DESIGN

P:\proj1\02\3E760_plans\pse\23e760mb014.dgn

LAST REVISION 06-14-11
DATE PLOTTED => 17-AUG-2011
TIME PLOTTED => 10:59

Dist	COUNTY	ROUTE	POST MILES TOTAL PROJECT	SHEET No.	TOTAL SHEETS
02	Sis	5	R50.9/R58.2	195	329

Robert Weber 06-14-11
REGISTERED CIVIL ENGINEER DATE

06-15-11
PLANS APPROVAL DATE

REGISTERED PROFESSIONAL ENGINEER ROBERT WEBER No. C62511 Exp. 9-30-11 CIVIL STATE OF CALIFORNIA

THE STATE OF CALIFORNIA OR ITS OFFICERS OR AGENTS SHALL NOT BE RESPONSIBLE FOR THE ACCURACY OR COMPLETENESS OF SCANNED COPIES OF THIS PLAN SHEET.

NOTES:

1. EXACT LOCATIONS OF PORTABLE LIGHTING SYSTEM TO BE APPROVED BY THE ENGINEER. LIGHT GLARE IS NOT TO IMPEDE VISION OF APPROACHING MOTORISTS.
2. PLACE W1-4R SIGN 500 FEET AHEAD OF CROSSOVER.

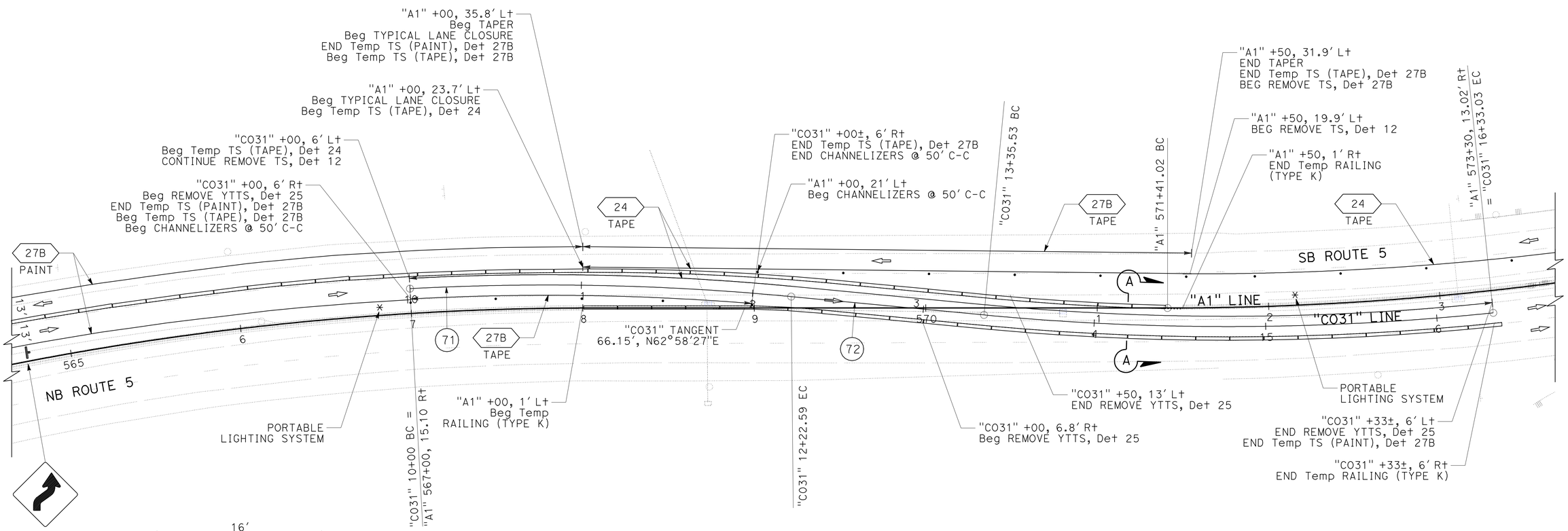

CROSSOVER 3

STAGE 1A

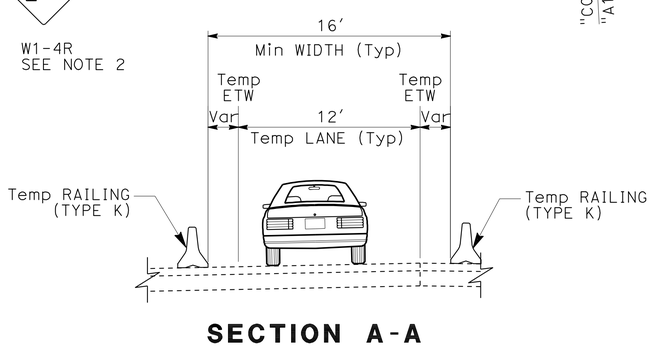

SECTION A-A

"CO31" 11+00 TO "CO31" 14+51
TYPICAL PLACEMENT OF
Temp RAILING (TYPE K)

CURVE DATA

No. ⊕	R	Δ	T	L
71	1500'	8°30'09"	111.50'	222.59'
72	1500'	11°21'49"	149.24'	297.50'

STAGE CONSTRUCTION AND TRAFFIC HANDLING DETAILS

SCALE: 1" = 30'

SCD-15

THIS PLAN ACCURATE FOR STAGE CONSTRUCTION AND TRAFFIC HANDLING WORK ONLY

R. FLOOD	04-01-11	CALCULATED-DESIGNED BY
R. WEBER	06-08-11	CHECKED BY
ROBERT WEBER		REVISED BY
RUSSELL FLOOD		DATE REVISED
STEVE TOPAL		FUNCTIONAL SUPERVISOR

STATE OF CALIFORNIA - DEPARTMENT OF TRANSPORTATION
Caltrans
DESIGN

P:\proj1\02\3E760_plans\pse\23e760mb015.dgn

LAST REVISION 06-14-11 | DATE PLOTTED => 17-AUG-2011 | TIME PLOTTED => 10:59

Dist	COUNTY	ROUTE	POST MILES TOTAL PROJECT	SHEET No.	TOTAL SHEETS
02	Sis	5	R50.9/R58.2	196	329

Robert Weber 06-14-11
REGISTERED CIVIL ENGINEER DATE

06-15-11
PLANS APPROVAL DATE

REGISTERED PROFESSIONAL ENGINEER ROBERT WEBER No. C62511 Exp. 9-30-11 CIVIL STATE OF CALIFORNIA

THE STATE OF CALIFORNIA OR ITS OFFICERS OR AGENTS SHALL NOT BE RESPONSIBLE FOR THE ACCURACY OR COMPLETENESS OF SCANNED COPIES OF THIS PLAN SHEET.

NOTES:

1. EXACT LOCATIONS OF PORTABLE LIGHTING SYSTEM TO BE APPROVED BY THE ENGINEER. LIGHT GLARE IS NOT TO IMPEDE VISION OF APPROACHING MOTORISTS.
2. AT THE END OF STAGE 1B, PLACE TEMPORARY RAILING (TYPE K) ALONG "A1" LINE FROM Sta 568+00 TO 571+50 TO REESTABLISH SAFETY BARRIER BETWEEN NB AND SB LANES.

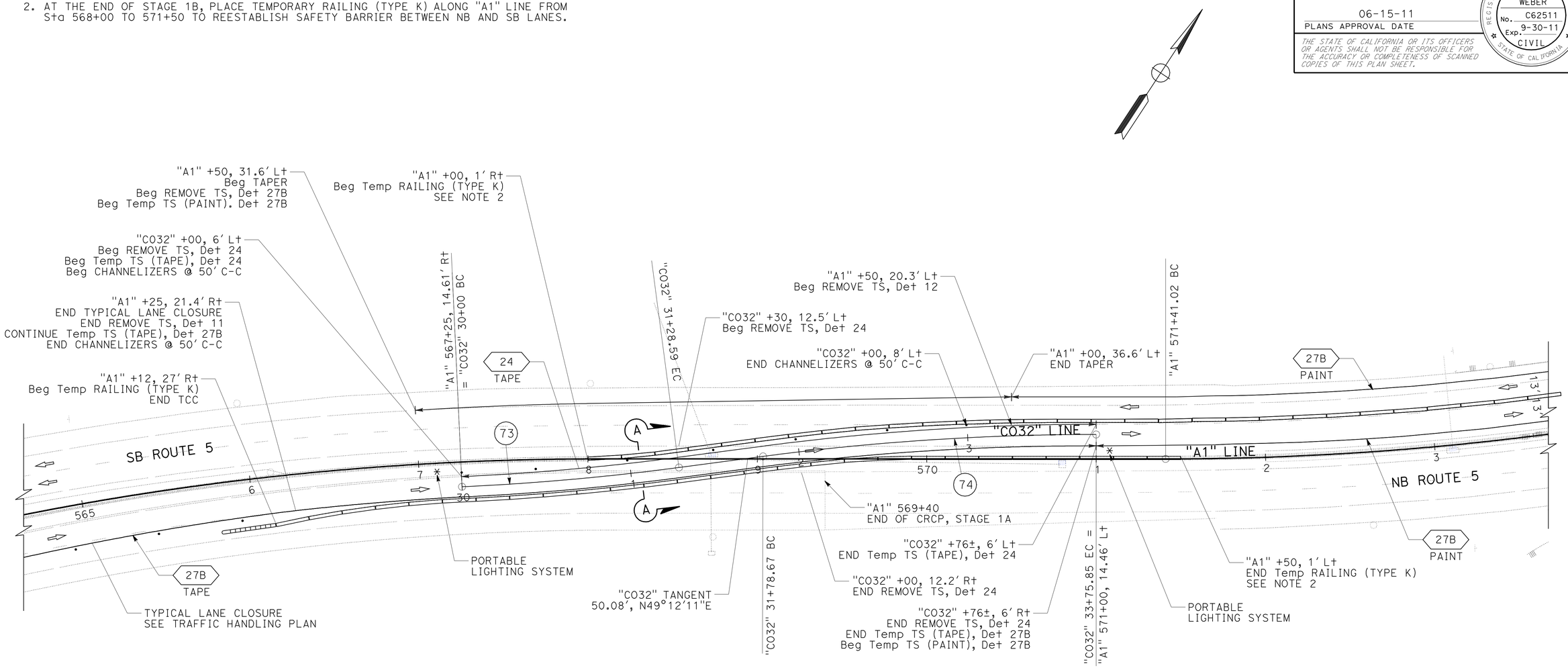

CROSSOVER 3

STAGE 1B

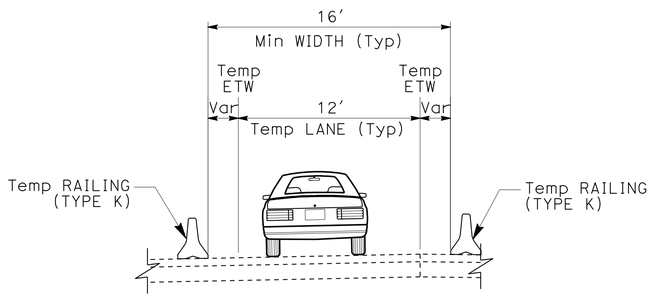

SECTION A-A

"C032" 30+76 TO "C032" 33+75
TYPICAL PLACEMENT OF
Temp RAILING (TYPE K)

CURVE DATA

No. ⊕	R	Δ	T	L
73	1500'	4°54'43"	64.34'	128.59'
74	1500'	7°31'54"	98.73'	197.18'

STAGE CONSTRUCTION AND TRAFFIC HANDLING DETAILS

SCALE: 1" = 30'

SCD-16

THIS PLAN ACCURATE FOR STAGE CONSTRUCTION AND TRAFFIC HANDLING WORK ONLY

REVISED BY	DATE REVISED
R. WEBER	06-0811
R. FLOOD	04-04-11

CALCULATED-DESIGNED BY: ROBERT WEBER
CHECKED BY: RUSSELL FLOOD
FUNCTIONAL SUPERVISOR: STEVE TOPAL

STATE OF CALIFORNIA - DEPARTMENT OF TRANSPORTATION
Caltrans
DESIGN

P:\proj\02\3E760_plans\pse\23e760mb016.dgn

LAST REVISION 06-14-11
DATE PLOTTED => 17-AUG-2011
TIME PLOTTED => 10:59

Dist	COUNTY	ROUTE	POST MILES TOTAL PROJECT	SHEET No.	TOTAL SHEETS
02	Sis	5	R50.9/R58.2	197	329

Robert Weber 06-14-11
REGISTERED CIVIL ENGINEER DATE

06-15-11
PLANS APPROVAL DATE

REGISTERED PROFESSIONAL ENGINEER ROBERT WEBER No. C62511 Exp. 9-30-11 CIVIL STATE OF CALIFORNIA

THE STATE OF CALIFORNIA OR ITS OFFICERS OR AGENTS SHALL NOT BE RESPONSIBLE FOR THE ACCURACY OR COMPLETENESS OF SCANNED COPIES OF THIS PLAN SHEET.

NOTES:

1. EXACT LOCATIONS OF PORTABLE LIGHTING SYSTEM TO BE APPROVED BY THE ENGINEER. LIGHT GLARE IS NOT TO IMPEDE VISION OF APPROACHING MOTORISTS.
2. PLACE W1-4R SIGN 500 FEET AHEAD OF CROSSOVER.

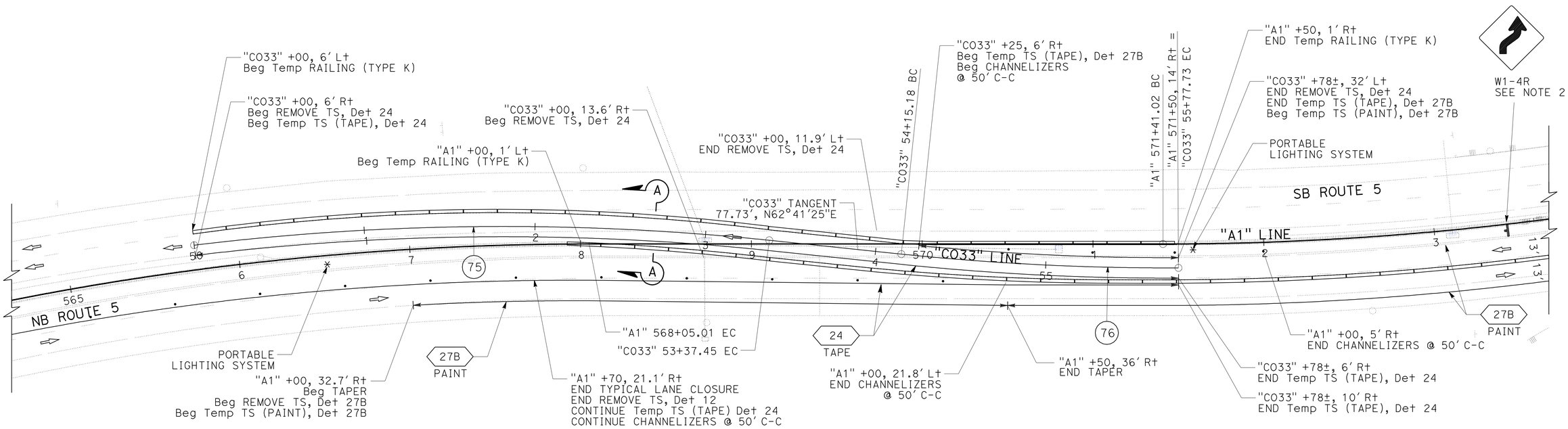

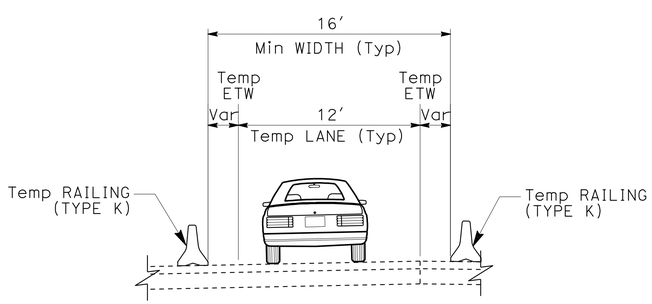

SECTION A-A

"CO33" 52+27 TO "CO33" 55+77
TYPICAL PLACEMENT OF
Temp RAILING (TYPE K)

CROSSOVER 3

STAGE 3B

CURVE DATA

No. (#)	R	Δ	T	L
75	1500′	12°53′22"	169.44′	337.45′
76	1500′	6°12′32"	81.35′	162.55′

STAGE CONSTRUCTION AND TRAFFIC HANDLING DETAILS

SCALE: 1" = 30′

SCD-17

THIS PLAN ACCURATE FOR STAGE CONSTRUCTION AND TRAFFIC HANDLING WORK ONLY

REVISED BY	DATE REVISED
R. FLOOD	04-01-11
R. WEBER	06-08-11

CALCULATED-DESIGNED BY: ROBERT WEBER
CHECKED BY: RUSSELL FLOOD
FUNCTIONAL SUPERVISOR: STEVE TOPAL

STATE OF CALIFORNIA - DEPARTMENT OF TRANSPORTATION
Caltrans® DESIGN

P:\proj1\02\3E760_plans\pse\23e760mb017.dgn

LAST REVISION 06-14-11 | DATE PLOTTED => 17-AUG-2011 | TIME PLOTTED => 10:59

Dist	COUNTY	ROUTE	POST MILES TOTAL PROJECT	SHEET No.	TOTAL SHEETS
02	Sis	5	R50.9/R58.2	198	329

Robert Weber 06-14-11
REGISTERED CIVIL ENGINEER DATE

06-15-11
PLANS APPROVAL DATE

REGISTERED PROFESSIONAL ENGINEER ROBERT WEBER No. C62511 Exp. 9-30-11 CIVIL STATE OF CALIFORNIA

THE STATE OF CALIFORNIA OR ITS OFFICERS OR AGENTS SHALL NOT BE RESPONSIBLE FOR THE ACCURACY OR COMPLETENESS OF SCANNED COPIES OF THIS PLAN SHEET.

NOTES:

1. EXACT LOCATIONS OF PORTABLE LIGHTING SYSTEM TO BE APPROVED BY THE ENGINEER. LIGHT GLARE IS NOT TO IMPEDE VISION OF APPROACHING MOTORISTS.
2. PLACE W1-4R SIGN 500 FEET AHEAD OF CROSSOVER.
3. AT THE END OF STAGE 3C, PLACE TEMPORARY RAILING (TYPE K) ALONG "A1" LINE FROM Sta 568+00 TO 571+50 TO REESTABLISH SAFETY BARRIER BETWEEN NB AND SB LANES.

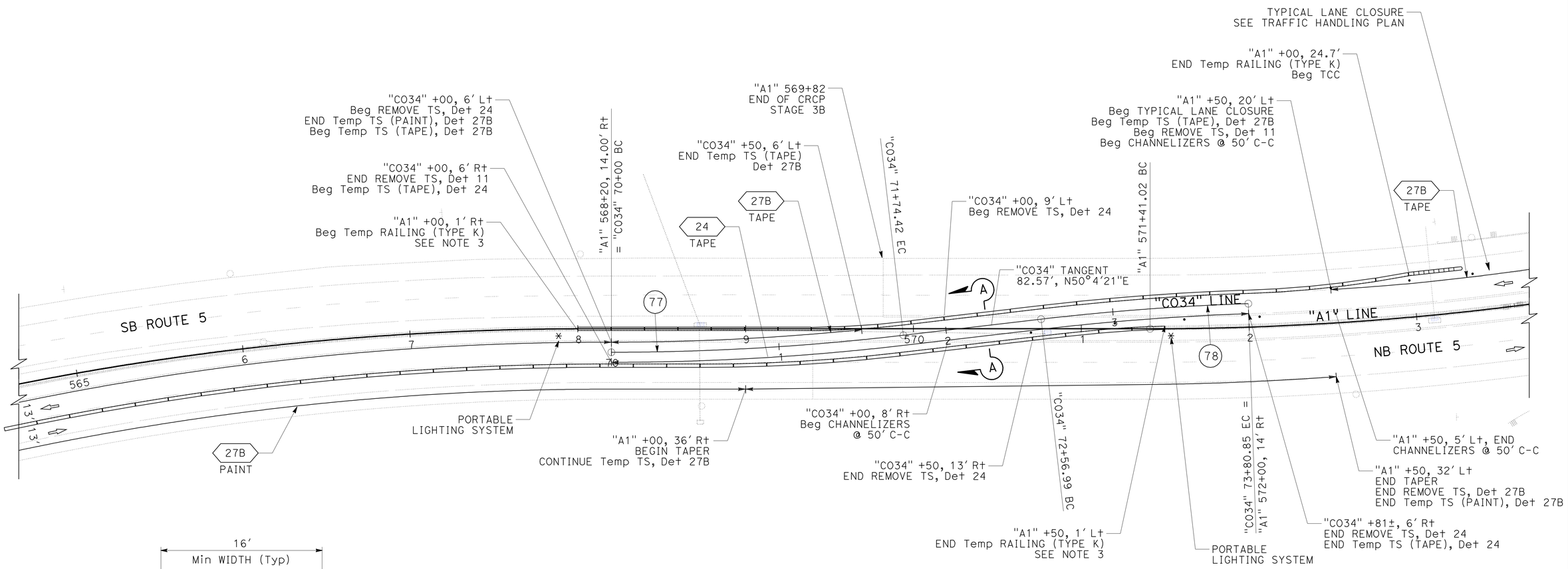

CROSSOVER 3

STAGE 3C

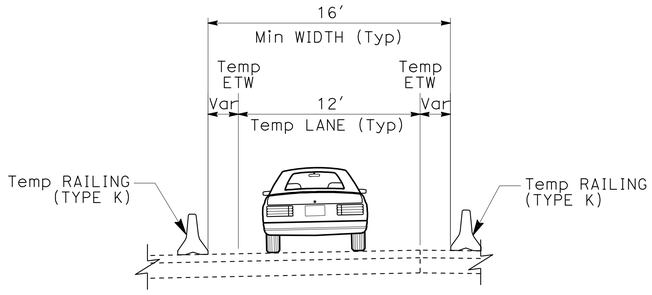

SECTION A-A

"C034" 70+00 TO "C034" 73+30
TYPICAL PLACEMENT OF
Temp RAILING (TYPE K)

CURVE DATA

No. ⊕	R	Δ	T	L
77	1500′	6°39′44"	87.31′	174.42′
78	1500′	4°43′52"	61.97′	123.86′

STAGE CONSTRUCTION AND TRAFFIC HANDLING DETAILS

SCALE: 1" = 30′

SCD-18

THIS PLAN ACCURATE FOR STAGE CONSTRUCTION AND TRAFFIC HANDLING WORK ONLY

R. FLOOD	04-04-11
R. WEBER	06-08-11
REVISED BY	DATE REVISED
ROBERT WEBER	
RUSSELL FLOOD	
CALCULATED-DESIGNED BY	
CHECKED BY	
FUNCTIONAL SUPERVISOR	
STEVE TOPAL	

STATE OF CALIFORNIA - DEPARTMENT OF TRANSPORTATION
DESIGN
Caltrans

P:\proj1\02\3E760_plans\pse\23e760mb018.dgn

LAST REVISION 06-14-11
DATE PLOTTED => 17-AUG-2011
TIME PLOTTED => 10:59

Dist	COUNTY	ROUTE	POST MILES TOTAL PROJECT	SHEET No.	TOTAL SHEETS
02	Sis	5	R50.9/R58.2	199	329

Robert Weber 06-14-11
REGISTERED CIVIL ENGINEER DATE

06-15-11
PLANS APPROVAL DATE

REGISTERED PROFESSIONAL ENGINEER ROBERT WEBER No. C62511 Exp. 9-30-11 CIVIL STATE OF CALIFORNIA

THE STATE OF CALIFORNIA OR ITS OFFICERS OR AGENTS SHALL NOT BE RESPONSIBLE FOR THE ACCURACY OR COMPLETENESS OF SCANNED COPIES OF THIS PLAN SHEET.

NOTE:

1. EXACT LOCATIONS OF PORTABLE LIGHTING SYSTEM TO BE APPROVED BY THE ENGINEER. LIGHT GLARE IS NOT TO IMPEDE VISION OF APPROACHING MOTORISTS.
2. PLACE W1-4R SIGN 500 FEET AHEAD OF CROSSOVER.

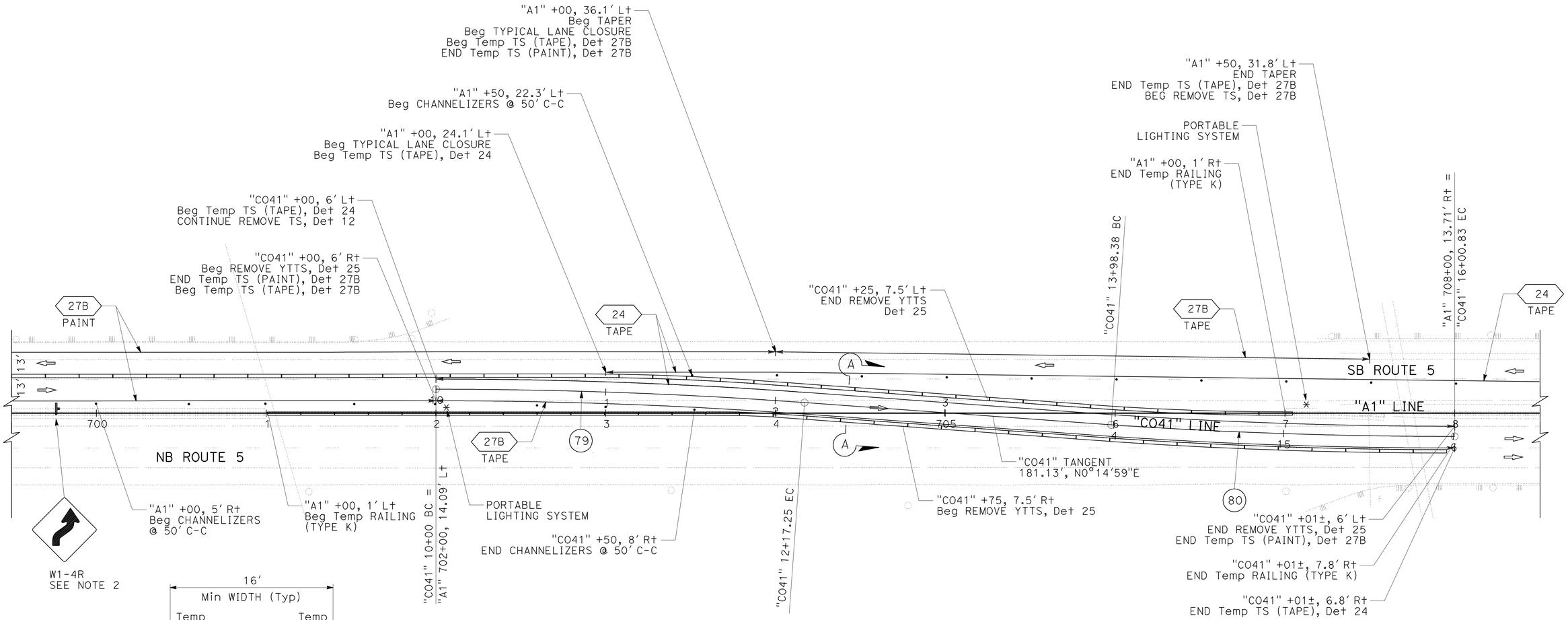

CROSSOVER 4

STAGE 1B

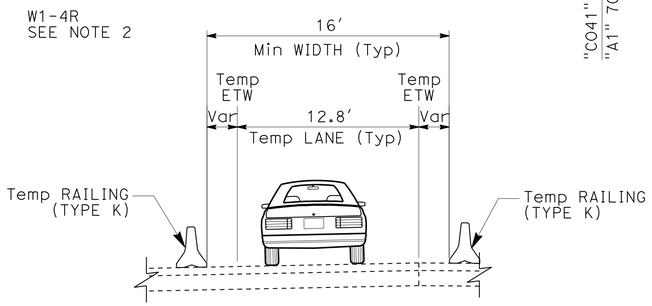

SECTION A-A

"C041" 10+00 TO "C041" 15+00
TYPICAL PLACEMENT OF
Temp RAILING (TYPE K)

CURVE DATA

No. ⊕	R	Δ	T	L
79	3000′	4°8′57"	108.67′	217.25′
80	3000′	3°52′00"	101.26′	202.45′

STAGE CONSTRUCTION AND TRAFFIC HANDLING DETAILS

SCALE: 1" = 30′

SCD-19

THIS PLAN ACCURATE FOR STAGE CONSTRUCTION AND TRAFFIC HANDLING WORK ONLY

REVISED BY	DATE REVISED
R. WEBER	06-09-11
R. FLOOD	04-04-11

CALCULATED-DESIGNED BY: ROBERT WEBER
CHECKED BY: RUSSELL FLOOD
FUNCTIONAL SUPERVISOR: STEVE TOPAL

STATE OF CALIFORNIA - DEPARTMENT OF TRANSPORTATION
Caltrans
DESIGN

P:\proj1\02\3E760_plans\pse\23e760mb019.dgn

Dist	COUNTY	ROUTE	POST MILES TOTAL PROJECT	SHEET No.	TOTAL SHEETS
02	Sis	5	R50.9/R58.2	200	329

Robert Weber 06-14-11
REGISTERED CIVIL ENGINEER DATE

06-15-11
PLANS APPROVAL DATE

REGISTERED PROFESSIONAL ENGINEER ROBERT WEBER No. C62511 Exp. 9-30-11 CIVIL STATE OF CALIFORNIA

THE STATE OF CALIFORNIA OR ITS OFFICERS OR AGENTS SHALL NOT BE RESPONSIBLE FOR THE ACCURACY OR COMPLETENESS OF SCANNED COPIES OF THIS PLAN SHEET.

NOTE:

1. EXACT LOCATIONS OF PORTABLE LIGHTING SYSTEM TO BE APPROVED BY THE ENGINEER. LIGHT GLARE IS NOT TO IMPEDE VISION OF APPROACHING MOTORISTS.
2. AT THE END OF STAGE 1C, PLACE TEMPORARY RAILING (TYPE K) ALONG "A1" LINE FROM Sta 701+00 TO 707+00 TO REESTABLISH SAFETY BARRIER BETWEEN NB AND SB LANES.

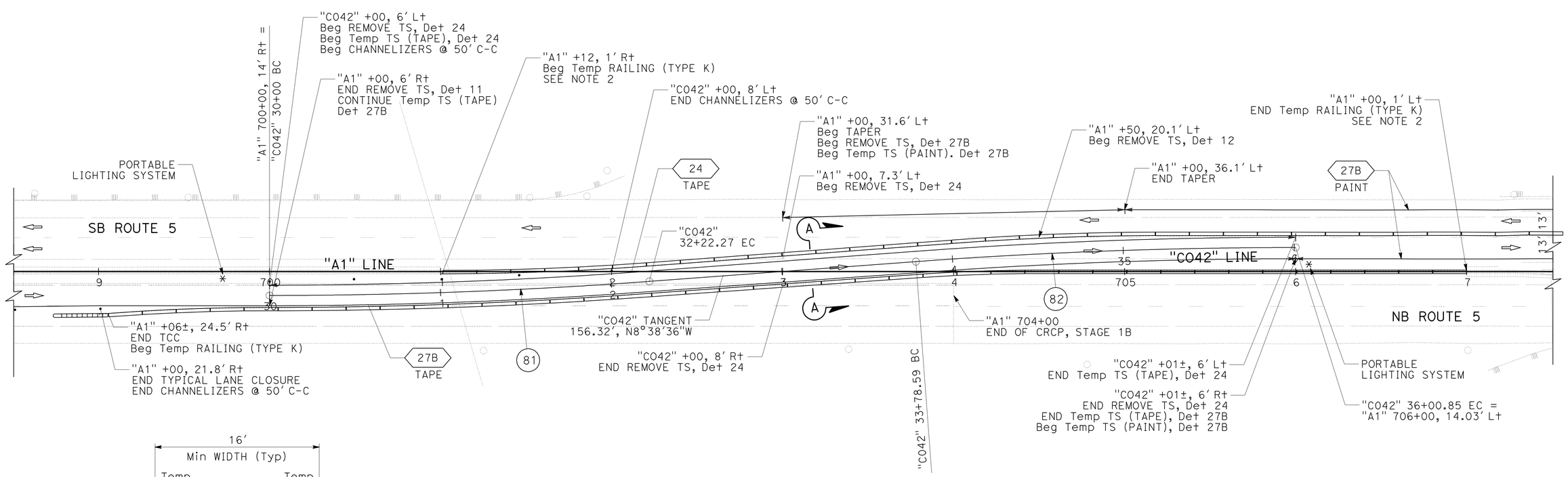

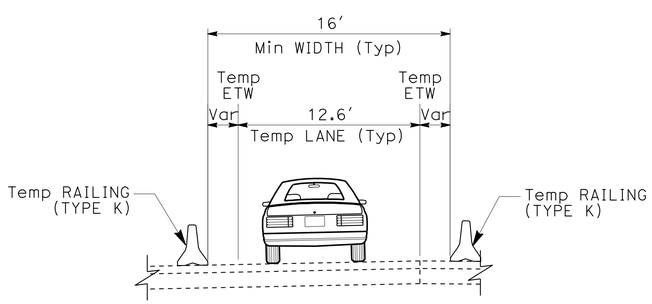

SECTION A-A

"C042" 31+00 TO "C042" 36+00
TYPICAL PLACEMENT OF
Temp RAILING (TYPE K)

CROSSOVER 4

STAGE 1C

CURVE DATA

No. ⊕	R	Δ	T	L
81	3000'	4°14'42"	111.18'	222.27'
82	3000'	4°14'42"	111.18'	222.26'

STAGE CONSTRUCTION AND TRAFFIC HANDLING DETAILS

SCALE: 1" = 30'

SCD-20

THIS PLAN ACCURATE FOR STAGE CONSTRUCTION AND TRAFFIC HANDLING WORK ONLY

CALCULATED-DESIGNED BY	ROBERT WEBER	REVISED BY	R. FLOOD	R. WEBER
CHECKED BY	RUSSELL FLOOD	DATE REVISED	04-05-11	06-09-11

FUNCTIONAL SUPERVISOR: STEVE TOPAL

STATE OF CALIFORNIA - DEPARTMENT OF TRANSPORTATION
Caltrans® DESIGN

P:\proj1\02\3E760_plans\pse\23e760mb020.dgn

LAST REVISION 06-14-11 | DATE PLOTTED => 17-AUG-2011 | TIME PLOTTED => 11:00

Dist	COUNTY	ROUTE	POST MILES TOTAL PROJECT	SHEET No.	TOTAL SHEETS
02	Sis	5	R50.9/R58.2	201	329

Robert Weber 06-14-11
REGISTERED CIVIL ENGINEER DATE

06-15-11
PLANS APPROVAL DATE

REGISTERED PROFESSIONAL ENGINEER ROBERT WEBER No. C62511 Exp. 9-30-11 CIVIL STATE OF CALIFORNIA

THE STATE OF CALIFORNIA OR ITS OFFICERS OR AGENTS SHALL NOT BE RESPONSIBLE FOR THE ACCURACY OR COMPLETENESS OF SCANNED COPIES OF THIS PLAN SHEET.

NOTE:

1. EXACT LOCATIONS OF PORTABLE LIGHTING SYSTEM TO BE APPROVED BY THE ENGINEER. LIGHT GLARE IS NOT TO IMPEDE VISION OF APPROACHING MOTORISTS.
2. PLACE W1-4R SIGN 500 FEET AHEAD OF CROSSOVER.

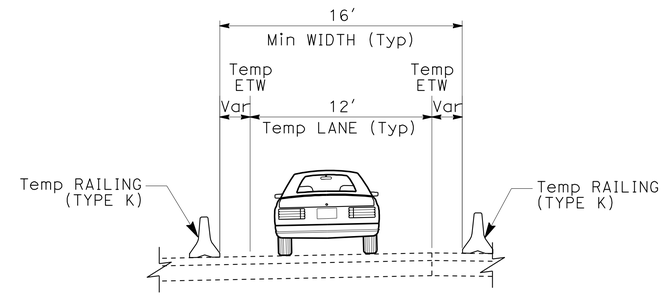

SECTION A-A

"C043" 51+00 TO "C043" 56+00
TYPICAL PLACEMENT OF
Temp RAILING (TYPE K)

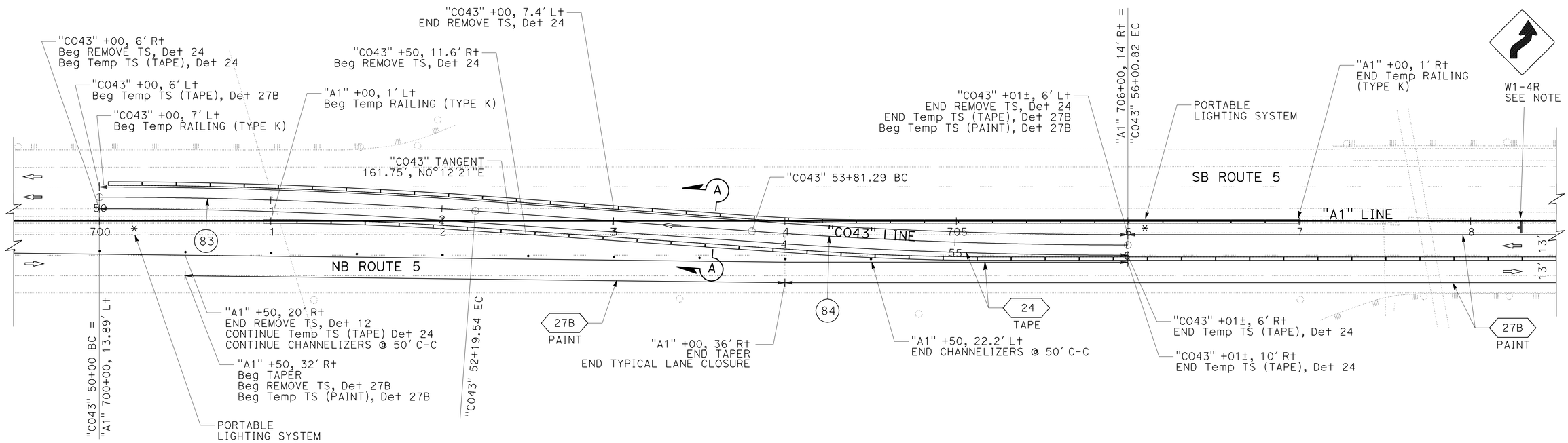

CROSSOVER 4

STAGE 3A

CURVE DATA

No.	R	Δ	T	L
83	3000′	4°11′34"	109.82′	219.54′
84	3000′	4°11′34"	109.82′	219.54′

STAGE CONSTRUCTION AND TRAFFIC HANDLING DETAILS

SCALE: 1" = 30′

SCD-21

THIS PLAN ACCURATE FOR STAGE CONSTRUCTION AND TRAFFIC HANDLING WORK ONLY

REVISED BY	DATE REVISED
R. WEBER	06-09-11
R. FLOOD	04-04-11

CALCULATED-DESIGNED BY: ROBERT WEBER
CHECKED BY: RUSSELL FLOOD
FUNCTIONAL SUPERVISOR: STEVE TOPAL

STATE OF CALIFORNIA - DEPARTMENT OF TRANSPORTATION
Caltrans® DESIGN

P:\proj1\02\3E760_plans\pse\23e760mb021.dgn

LAST REVISION 06-14-11 | DATE PLOTTED => 17-AUG-2011 | TIME PLOTTED => 11:00

Dist	COUNTY	ROUTE	POST MILES TOTAL PROJECT	SHEET No.	TOTAL SHEETS
02	Sis	5	R50.9/R58.2	202	329

Robert Weber 06-14-11
REGISTERED CIVIL ENGINEER DATE

06-15-11
PLANS APPROVAL DATE

REGISTERED PROFESSIONAL ENGINEER ROBERT WEBER No. C62511 Exp. 9-30-11 CIVIL STATE OF CALIFORNIA

THE STATE OF CALIFORNIA OR ITS OFFICERS OR AGENTS SHALL NOT BE RESPONSIBLE FOR THE ACCURACY OR COMPLETENESS OF SCANNED COPIES OF THIS PLAN SHEET.

NOTE:

1. EXACT LOCATIONS OF PORTABLE LIGHTING SYSTEM TO BE APPROVED BY THE ENGINEER. LIGHT GLARE IS NOT TO IMPEDE VISION OF APPROACHING MOTORISTS.
2. AT THE END OF STAGE 3B, PLACE TEMPORARY RAILING (TYPE K) ALONG "A1" LINE FROM Sta 701+00 TO 707+00 TO REESTABLISH SAFETY BARRIER BETWEEN NB AND SB LANES.

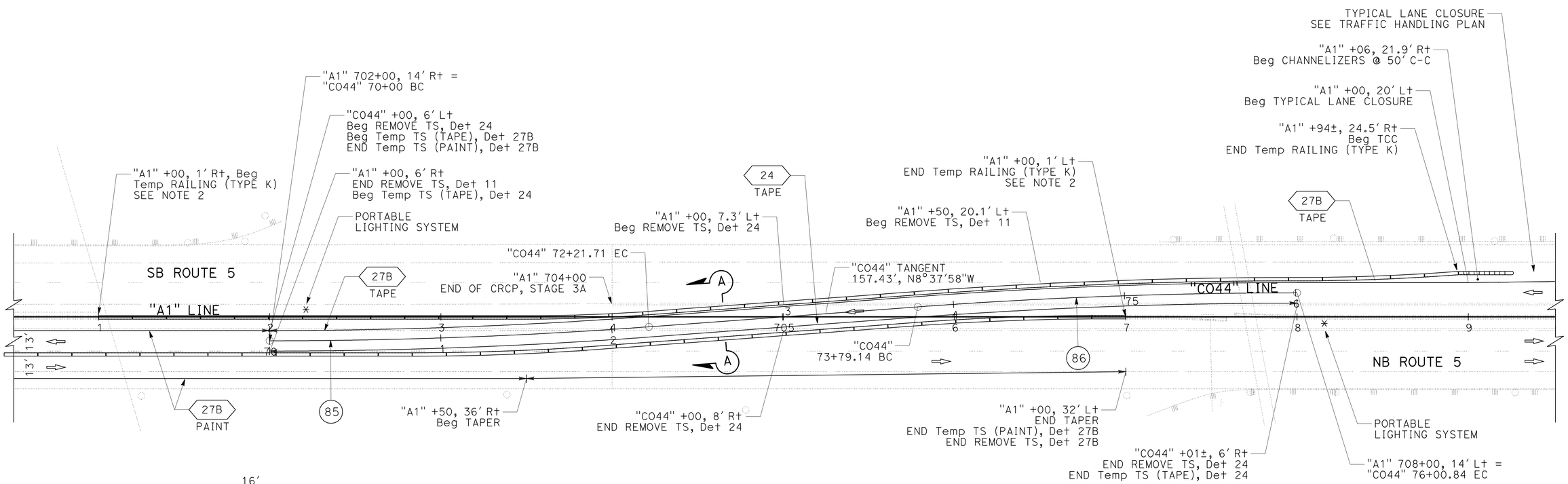

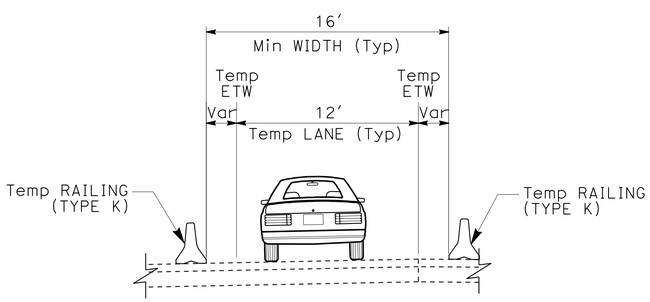

SECTION A-A

"C044" 70+00 TO "C044" 75+00
TYPICAL PLACEMENT OF
Temp RAILING (TYPE K)

CROSSOVER 4

STAGE 3B

CURVE DATA

No. ⊕	R	Δ	T	L
85	3000′	4°14′03"	110.90′	221.71′
86	3000′	4°14′03"	110.90′	221.70′

THIS PLAN ACCURATE FOR STAGE CONSTRUCTION AND TRAFFIC HANDLING WORK ONLY

STAGE CONSTRUCTION AND TRAFFIC HANDLING DETAILS

SCALE: 1" = 30′

SCD-22

REVISED BY	DATE REVISED
R. WEBER	06-09-11
R. FLOOD	04-05-11

CALCULATED-DESIGNED BY
CHECKED BY
FUNCTIONAL SUPERVISOR
STEVE TOPAL

STATE OF CALIFORNIA - DEPARTMENT OF TRANSPORTATION
Caltrans
DESIGN

P:\proj\02\3E760_plans\pse\23e760mb022.dgn

LAST REVISION 06-14-11
DATE PLOTTED => 17-AUG-2011
TIME PLOTTED => 11:00

Dist	COUNTY	ROUTE	POST MILES TOTAL PROJECT	SHEET No.	TOTAL SHEETS
02	Sis	5	R50.9/R58.2	203	329

Robert Weber 06-14-11
REGISTERED CIVIL ENGINEER DATE

06-15-11
PLANS APPROVAL DATE

REGISTERED PROFESSIONAL ENGINEER ROBERT WEBER No. C62511 Exp. 9-30-11 CIVIL STATE OF CALIFORNIA

THE STATE OF CALIFORNIA OR ITS OFFICERS OR AGENTS SHALL NOT BE RESPONSIBLE FOR THE ACCURACY OR COMPLETENESS OF SCANNED COPIES OF THIS PLAN SHEET.

NOTES:

1. EXACT LOCATIONS OF PORTABLE LIGHTING SYSTEM TO BE APPROVED BY THE ENGINEER. LIGHT GLARE IS NOT TO IMPEDE VISION OF APPROACHING MOTORISTS.
2. PLACE W1-4R SIGN 500 FEET AHEAD OF CROSSOVER.

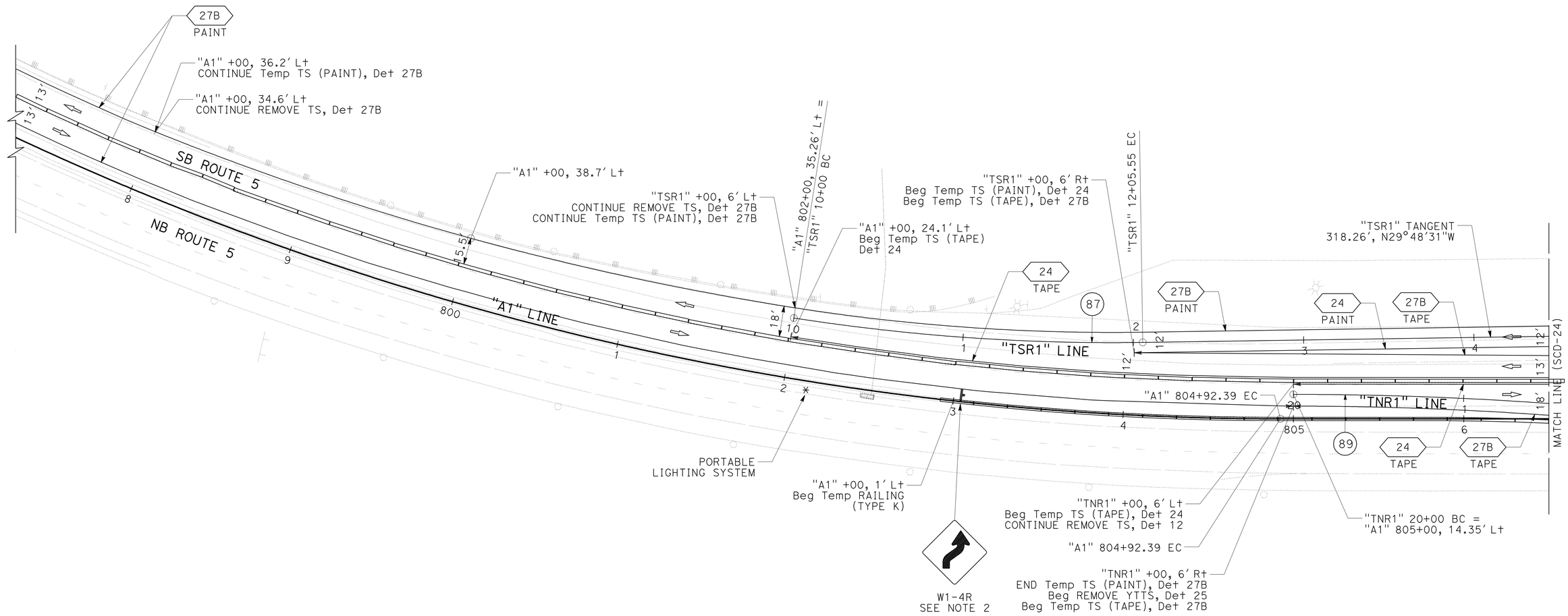

CROSSOVER 5

STAGE 1C

CURVE DATA

No. Ⓗ	R	Δ	T	L
87	1212′	9°43′01"	103.02′	205.55′
89	2100′	7°36′25"	139.61′	278.81′

STAGE CONSTRUCTION AND TRAFFIC HANDLING DETAILS

SCALE: 1" = 30′

SCD-23

THIS PLAN ACCURATE FOR STAGE CONSTRUCTION AND TRAFFIC HANDLING WORK ONLY

REVISED BY	DATE REVISED
R. WEBER	06-10-11
R. FLOOD	04-05-11

CALCULATED-DESIGNED BY: ROBERT WEBER
CHECKED BY: RUSSELL FLOOD
FUNCTIONAL SUPERVISOR: STEVE TOPAL

STATE OF CALIFORNIA - DEPARTMENT OF TRANSPORTATION
Caltrans
DESIGN

P:\proj1\02\3E760_plans\pse\23e760mb023.dgn

LAST REVISION 06-14-11 | DATE PLOTTED => 17-AUG-2011 | TIME PLOTTED => 11:00

Dist	COUNTY	ROUTE	POST MILES TOTAL PROJECT	SHEET No.	TOTAL SHEETS
02	Sis	5	R50.9/R58.2	204	329

Robert Weber 06-14-11
REGISTERED CIVIL ENGINEER DATE

06-15-11
PLANS APPROVAL DATE

REGISTERED PROFESSIONAL ENGINEER ROBERT WEBER No. C62511 Exp. 9-30-11 CIVIL STATE OF CALIFORNIA

THE STATE OF CALIFORNIA OR ITS OFFICERS OR AGENTS SHALL NOT BE RESPONSIBLE FOR THE ACCURACY OR COMPLETENESS OF SCANNED COPIES OF THIS PLAN SHEET.

NOTES:

1. EXACT LOCATIONS OF PORTABLE LIGHTING SYSTEM TO BE APPROVED BY THE ENGINEER. LIGHT GLARE IS NOT TO IMPEDE VISION OF APPROACHING MOTORISTS.

CONSTRUCTION AREA SIGNS (STATIONARY MOUNTED)

CODE	PANEL SIZE	SIGN MESSAGE	NUMBER AND SIZE OF POSTS	NUMBER OF SIGNS
G84-3 (CA)	54" x 48"	EXIT 786	1 - 4" x 6"	1
G80A	48" x 48"	REST AREA		
			TOTAL THIS SHEET	1

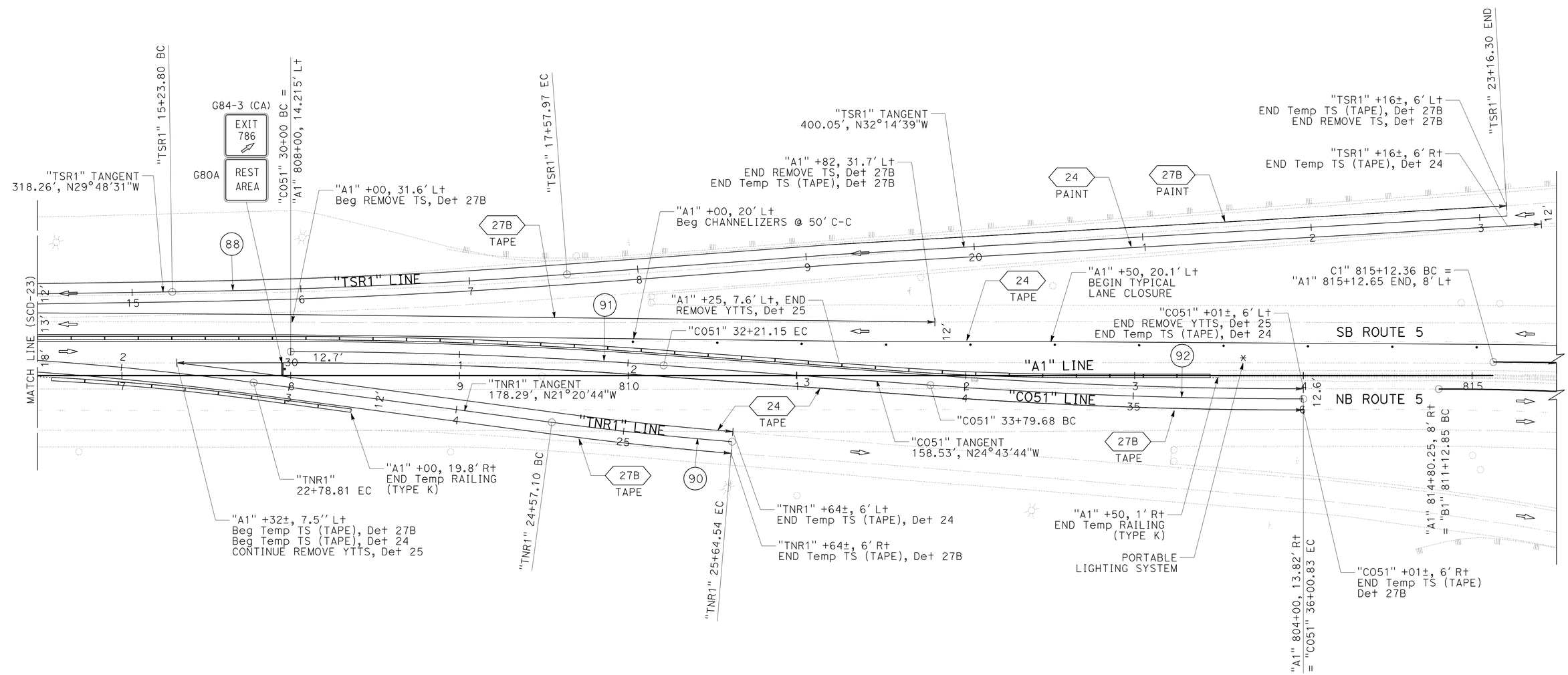

CURVE DATA

No.	R	Δ	T	L
88	3986'	3°21'58"	117.12'	234.17'
90	2100'	2°55'53"	53.73'	107.44'
91	3000'	4°13'25"	110.63'	221.15'
92	3000'	4°13'25"	110.63'	221.15'

CROSSOVER 5

STAGE 1C

STAGE CONSTRUCTION AND TRAFFIC HANDLING DETAILS

SCALE: 1" = 30'

SCD-24

THIS PLAN ACCURATE FOR STAGE CONSTRUCTION AND TRAFFIC HANDLING WORK ONLY

REVISED BY	DATE REVISED
R. WEBER	06-10-11
R. FLOOD	04-06-11

CALCULATED-DESIGNED BY: ROBERT WEBER
CHECKED BY: RUSSELL FLOOD
FUNCTIONAL SUPERVISOR: STEVE TOPAL

STATE OF CALIFORNIA - DEPARTMENT OF TRANSPORTATION
Caltrans
DESIGN

P:\proj1\02\3E760_plans\pse\23e760mb024.dgn

LAST REVISION 06-14-11
DATE PLOTTED => 17-AUG-2011
TIME PLOTTED => 11:00

Dist	COUNTY	ROUTE	POST MILES TOTAL PROJECT	SHEET No.	TOTAL SHEETS
02	Sis	5	R50.9/R58.2	205	329

Robert Weber 06-14-11
REGISTERED CIVIL ENGINEER DATE

06-15-11
PLANS APPROVAL DATE

REGISTERED PROFESSIONAL ENGINEER ROBERT WEBER No. C62511 Exp. 9-30-11 CIVIL STATE OF CALIFORNIA

THE STATE OF CALIFORNIA OR ITS OFFICERS OR AGENTS SHALL NOT BE RESPONSIBLE FOR THE ACCURACY OR COMPLETENESS OF SCANNED COPIES OF THIS PLAN SHEET.

NOTES:

1. TAPER OF Temp TRAFFIC STRIPE AND TEMPORARY RAILING (TYPE K) FROM TYPICAL POSITION, BEGINS AT STATION 795+50.
2. END REMOVE TRAFFIC STRIPE (PAINT), DETAIL 12 AND BEGIN TEMPORARY TRAFFIC STRIPE, DETAIL 24 (TAPE) AT STATION 795+50.
3. EXACT LOCATIONS OF PORTABLE LIGHTING SYSTEM TO BE APPROVED BY THE ENGINEER. LIGHT GLARE IS NOT TO IMPEDE VISION OF APPROACHING MOTORISTS.

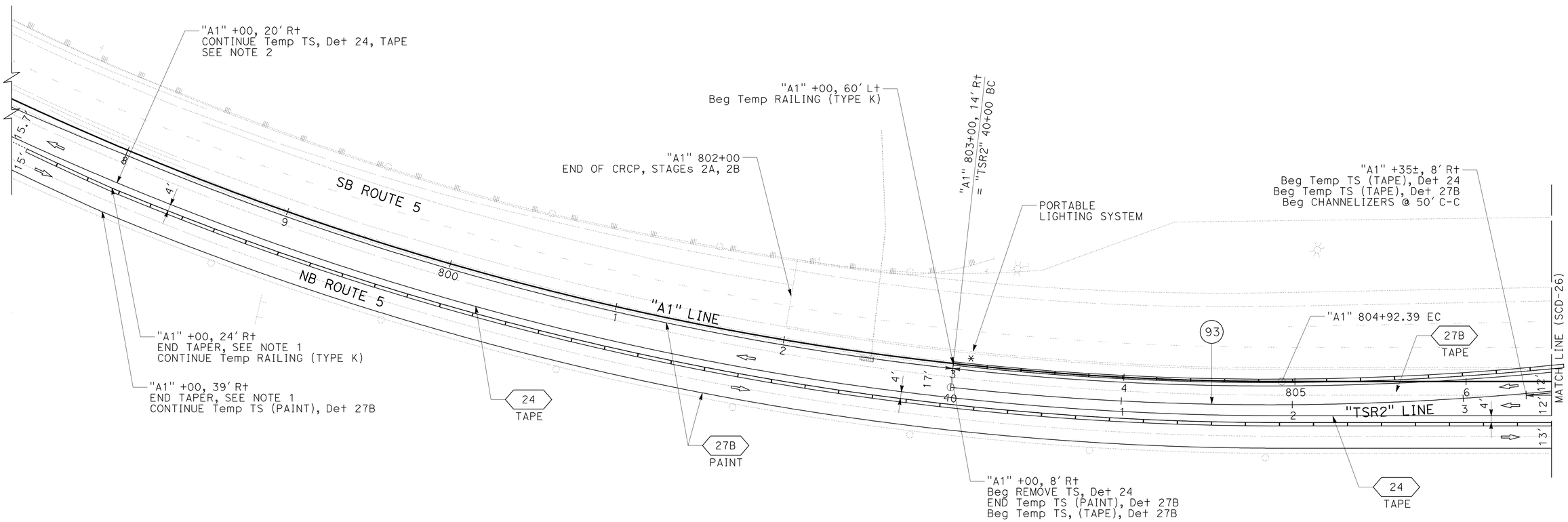

CROSSOVER 5

STAGE 3A

CURVE DATA

No. Ⓡ	R	Δ	T	L
93	1700'	17°37'33"	263.57'	522.97'

STAGE CONSTRUCTION AND TRAFFIC HANDLING DETAILS

SCALE: 1" = 30'

THIS PLAN ACCURATE FOR STAGE CONSTRUCTION AND TRAFFIC HANDLING WORK ONLY

SCD-25

REVISED BY	DATE REVISED
R. WEBER	06-13-11

CALCULATED-DESIGNED BY: ROBERT WEBER
CHECKED BY: RUSSELL FLOOD
FUNCTIONAL SUPERVISOR: STEVE TOPAL

STATE OF CALIFORNIA - DEPARTMENT OF TRANSPORTATION
Caltrans
DESIGN

P:\proj\02\3E760_plans\pse\23e760mb025.dgn

LAST REVISION 06-14-11 | DATE PLOTTED => 17-AUG-2011 | TIME PLOTTED => 11:00

Dist	COUNTY	ROUTE	POST MILES TOTAL PROJECT	SHEET No.	TOTAL SHEETS
02	Sis	5	R50.9/R58.2	206	329

Robert Weber 06-14-11
REGISTERED CIVIL ENGINEER DATE

06-15-11
PLANS APPROVAL DATE

REGISTERED PROFESSIONAL ENGINEER ROBERT WEBER No. C62511 Exp. 9-30-11 CIVIL STATE OF CALIFORNIA

THE STATE OF CALIFORNIA OR ITS OFFICERS OR AGENTS SHALL NOT BE RESPONSIBLE FOR THE ACCURACY OR COMPLETENESS OF SCANNED COPIES OF THIS PLAN SHEET.

NOTES:

1. TEMPORARY TRAFFIC STRIPE, DETAIL 27B CONFORMS AT "B1" 814+00, 24′ Rt.
2. EXACT LOCATIONS OF PORTABLE LIGHTING SYSTEM TO BE APPROVED BY THE ENGINEER. LIGHT GLARE IS NOT TO IMPEDE VISION OF APPROACHING MOTORISTS.
3. PLACE W1-4L SIGN 500 FEET AHEAD OF CURVE.

CONSTRUCTION AREA SIGNS (STATIONARY MOUNTED)

CODE	PANEL SIZE	SIGN MESSAGE	NUMBER AND SIZE OF POSTS	NUMBER OF SIGNS
W1-4L	48" x 48"	REVERSE CURVE (LEFT)	1 - 4" x 6"	1
W4-1	48" x 48"	MERGE	1 - 4" x 6"	1
			TOTAL THIS SHEET	2

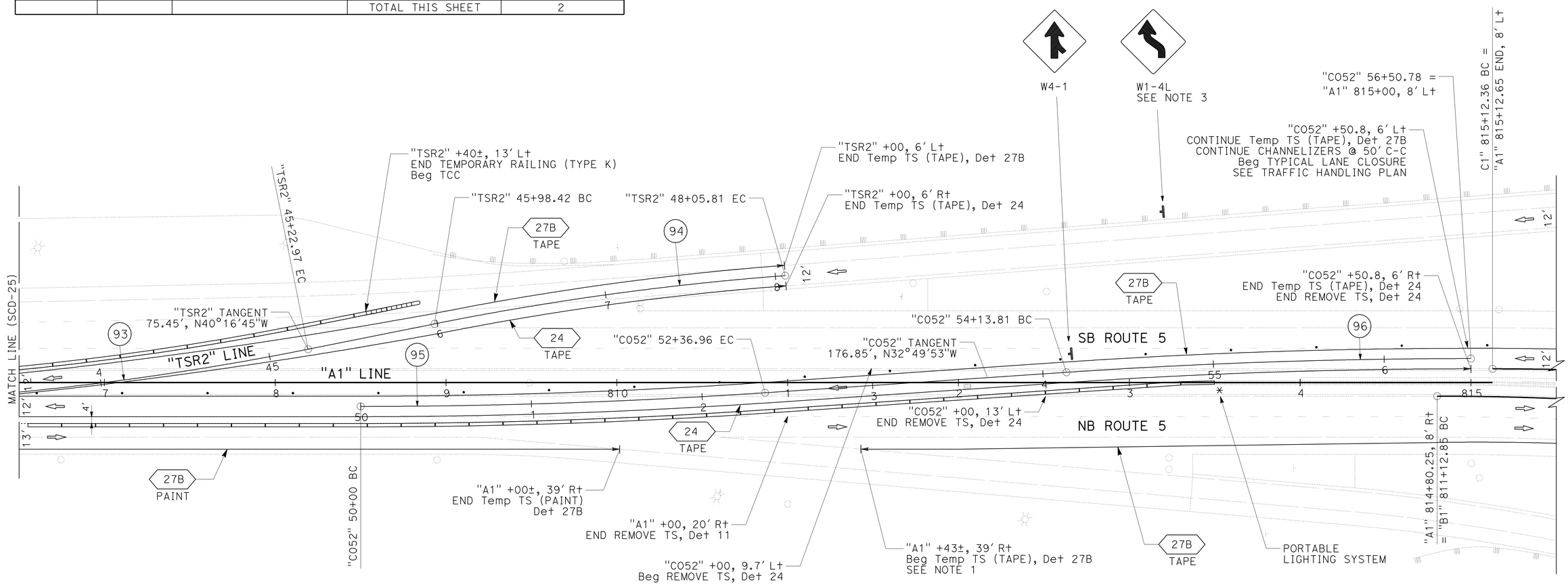

CURVE DATA

No. Ⓗ	R	Δ	T	L
93	1700′	17°37′33"	263.57′	522.97′
94	1700′	6°59′23"	103.82′	207.39′
95	3500′	3°52′45"	118.52′	236.96′
96	3500′	3°52′45"	118.53′	236.96′

CROSSOVER 5

STAGE 3A

STAGE CONSTRUCTION AND TRAFFIC HANDLING DETAILS

SCALE: 1" = 30′

SCD-26

THIS PLAN ACCURATE FOR STAGE CONSTRUCTION AND TRAFFIC HANDLING WORK ONLY

REVISED BY	DATE REVISED
R. WEBER	06-13-11

CALCULATED-DESIGNED BY: ROBERT WEBER
CHECKED BY: RUSSELL FLOOD
FUNCTIONAL SUPERVISOR: STEVE TOPAL

STATE OF CALIFORNIA - DEPARTMENT OF TRANSPORTATION
Caltrans
DESIGN

P:\proj1\02\3E760_plans\pse\23e760mb026.dgn

LAST REVISION 06-14-11 | DATE PLOTTED => 17-AUG-2011 | TIME PLOTTED => 11:00

Dist	COUNTY	ROUTE	POST MILES TOTAL PROJECT	SHEET No.	TOTAL SHEETS
02	Sis	5	R50.9/R58.2	207	329

Robert Weber 06-14-11
REGISTERED CIVIL ENGINEER DATE

06-15-11
PLANS APPROVAL DATE

REGISTERED PROFESSIONAL ENGINEER ROBERT WEBER No. C62511 Exp. 9-30-11 CIVIL STATE OF CALIFORNIA

THE STATE OF CALIFORNIA OR ITS OFFICERS OR AGENTS SHALL NOT BE RESPONSIBLE FOR THE ACCURACY OR COMPLETENESS OF SCANNED COPIES OF THIS PLAN SHEET.

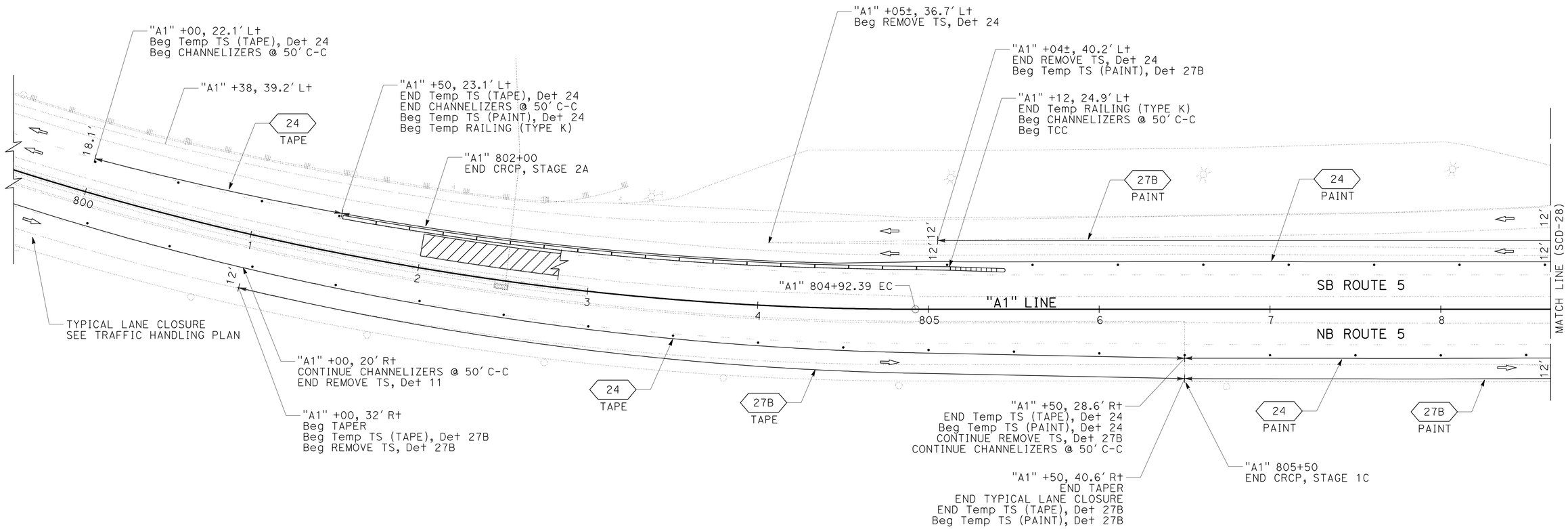

NB AND SB ROADWAYS

STAGE 2A

STAGE CONSTRUCTION AND TRAFFIC HANDLING DETAILS

SCALE: 1" = 30′

SCD-27

THIS PLAN ACCURATE FOR STAGE CONSTRUCTION AND TRAFFIC HANDLING WORK ONLY

REVISED BY	DATE REVISED
R. WEBER	06-14-11
R. FLOOD	04-08-11

CALCULATED-DESIGNED BY: ROBERT WEBER
CHECKED BY: RUSSELL FLOOD
FUNCTIONAL SUPERVISOR: STEVE TOPAL

STATE OF CALIFORNIA - DEPARTMENT OF TRANSPORTATION
Caltrans®
DESIGN

P:\proj\02\3E760_plans\pse\23e760mb027.dgn

LAST REVISION 06-14-11
DATE PLOTTED => 17-AUG-2011
TIME PLOTTED => 11:00

Dist	COUNTY	ROUTE	POST MILES TOTAL PROJECT	SHEET No.	TOTAL SHEETS
02	Sis	5	R50.9/R58.2	208	329

Robert Weber 06-14-11
REGISTERED CIVIL ENGINEER DATE

06-15-11
PLANS APPROVAL DATE

REGISTERED PROFESSIONAL ENGINEER ROBERT WEBER No. C62511 Exp. 9-30-11 CIVIL STATE OF CALIFORNIA

THE STATE OF CALIFORNIA OR ITS OFFICERS OR AGENTS SHALL NOT BE RESPONSIBLE FOR THE ACCURACY OR COMPLETENESS OF SCANNED COPIES OF THIS PLAN SHEET.

NOTE:

1. CONTINUE REMOVE TRAFFIC STRIPE, DETAIL 27B, TO STATION "C1" 830+50.

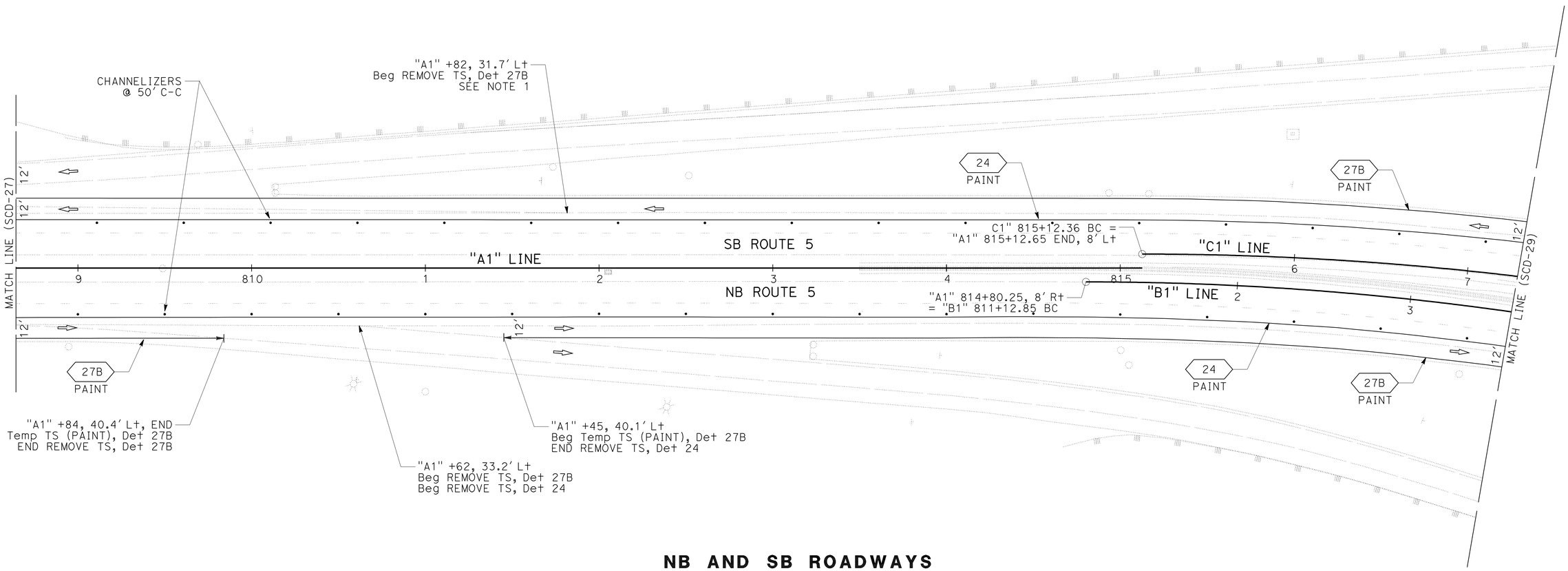

NB AND SB ROADWAYS

STAGE 2A

STAGE CONSTRUCTION AND TRAFFIC HANDLING DETAILS

SCALE: 1" = 30'

SCD-28

THIS PLAN ACCURATE FOR STAGE CONSTRUCTION AND TRAFFIC HANDLING WORK ONLY

R. WEBER	06-14-11	ROBERT WEBER	RUSSELL FLOOD
R. FLOOD	04-08-11	CALCULATED-DESIGNED BY	CHECKED BY
REVISED BY	DATE REVISED	FUNCTIONAL SUPERVISOR	STEVE TOPAL

STATE OF CALIFORNIA - DEPARTMENT OF TRANSPORTATION
Caltrans
DESIGN

P:\proj1\02\3E760_plans\pse\23e760mb028.dgn

LAST REVISION 06-14-11 | DATE PLOTTED => 17-AUG-2011 | TIME PLOTTED => 11:01

Dist	COUNTY	ROUTE	POST MILES TOTAL PROJECT	SHEET No.	TOTAL SHEETS
02	Sis	5	R50.9/R58.2	209	329

Robert Weber 06-14-11
REGISTERED CIVIL ENGINEER DATE

06-15-11
PLANS APPROVAL DATE

REGISTERED PROFESSIONAL ENGINEER ROBERT WEBER No. C62511 Exp. 9-30-11 CIVIL STATE OF CALIFORNIA

THE STATE OF CALIFORNIA OR ITS OFFICERS OR AGENTS SHALL NOT BE RESPONSIBLE FOR THE ACCURACY OR COMPLETENESS OF SCANNED COPIES OF THIS PLAN SHEET.

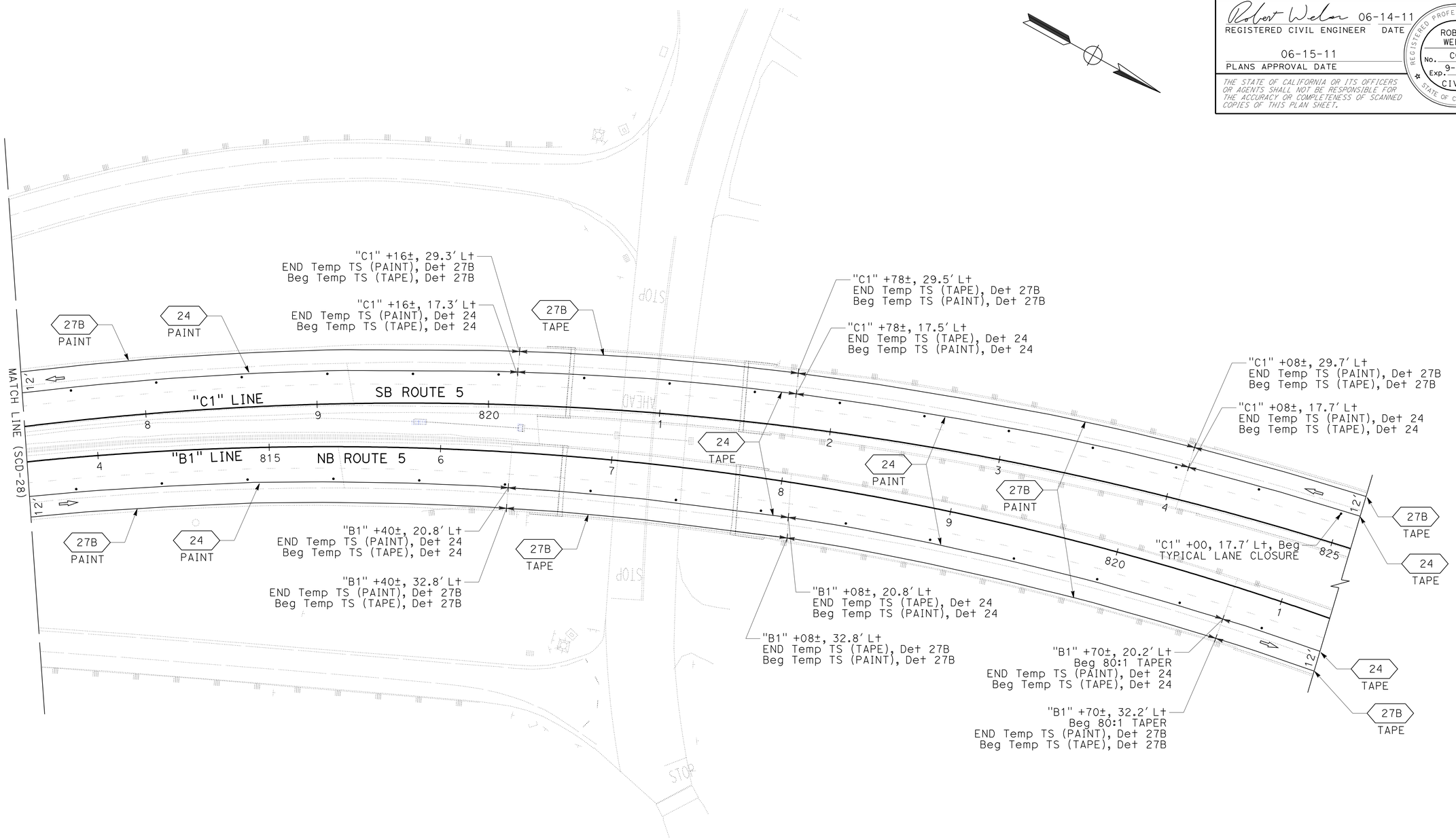

NB AND SB ROADWAYS

STAGE 2A

STAGE CONSTRUCTION AND TRAFFIC HANDLING DETAILS

SCALE: 1" = 30'

THIS PLAN ACCURATE FOR STAGE CONSTRUCTION AND TRAFFIC HANDLING WORK ONLY

SCD-29

R. WEBER	06-14-11		
R. FLOOD	04-08-11		
REVISED BY	DATE REVISED		
ROBERT WEBER	RUSSELL FLOOD		
CALCULATED-DESIGNED BY	CHECKED BY		
FUNCTIONAL SUPERVISOR	STEVE TOPAL		

STATE OF CALIFORNIA - DEPARTMENT OF TRANSPORTATION
Caltrans
DESIGN

P:\proj1\02\3E760_plans\pse\23e760mb029.dgn

LAST REVISION 06-14-11 | DATE PLOTTED => 17-AUG-2011 | TIME PLOTTED => 11:01

Dist	COUNTY	ROUTE	POST MILES TOTAL PROJECT	SHEET No.	TOTAL SHEETS
02	Sis	5	R50.9/R58.2	210	329

Robert Weber 06-14-11
REGISTERED CIVIL ENGINEER DATE

06-15-11
PLANS APPROVAL DATE

REGISTERED PROFESSIONAL ENGINEER ROBERT WEBER No. C62511 Exp. 9-30-11 CIVIL STATE OF CALIFORNIA

THE STATE OF CALIFORNIA OR ITS OFFICERS OR AGENTS SHALL NOT BE RESPONSIBLE FOR THE ACCURACY OR COMPLETENESS OF SCANNED COPIES OF THIS PLAN SHEET.

NOTES:

1. STRIPE CONFORM, "A1" 797+50, 7.4′ Lt.
2. BEGIN REMOVAL OF TRAFFIC STRIPE, DETAIL 25, AT "A1" 797+50, 7.4′ Lt.
3. SB ON-RAMP TO BE CLOSED DURING CONSTRUCTION OF SB ROADWAY BETWEEN "A1" 802+00 AND 805+00. OPEN RAMP AS SOON AS THAT SEGMENT IS COMPLETE.

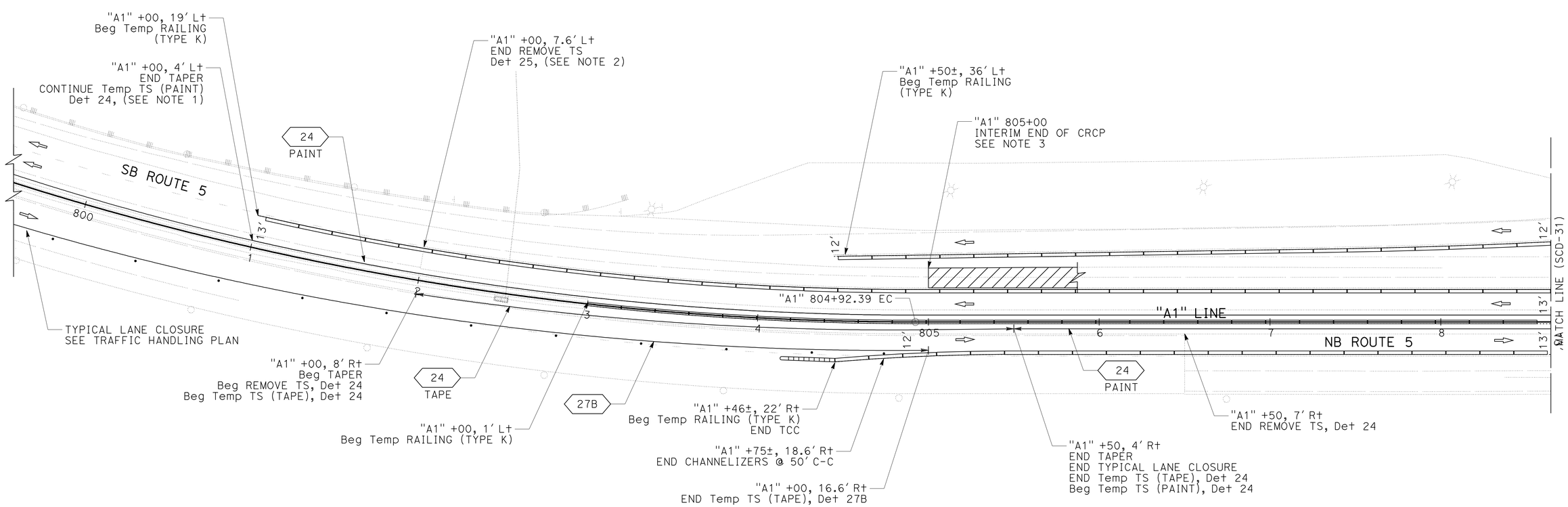

NB AND SB ROADWAYS

STAGE 2B

STAGE CONSTRUCTION AND TRAFFIC HANDLING DETAILS

SCALE: 1" = 30′

SCD-30

THIS PLAN ACCURATE FOR STAGE CONSTRUCTION AND TRAFFIC HANDLING WORK ONLY

REVISED BY	DATE REVISED
R. WEBER	06-14-11
R. FLOOD	04-11-11

CALCULATED-DESIGNED BY: ROBERT WEBER
CHECKED BY: RUSSELL FLOOD
FUNCTIONAL SUPERVISOR: STEVE TOPAL

STATE OF CALIFORNIA - DEPARTMENT OF TRANSPORTATION
Caltrans®
DESIGN

P:\proj\02\3E760_plans\pse\23e760mb030.dgn

LAST REVISION 06-14-11
DATE PLOTTED => 17-AUG-2011
TIME PLOTTED => 11:01

Dist	COUNTY	ROUTE	POST MILES TOTAL PROJECT	SHEET No.	TOTAL SHEETS
02	Sis	5	R50.9/R58.2	211	329

Robert Weber 06-14-11
REGISTERED CIVIL ENGINEER DATE

06-15-11
PLANS APPROVAL DATE

REGISTERED PROFESSIONAL ENGINEER
ROBERT WEBER
No. C62511
Exp. 9-30-11
CIVIL
STATE OF CALIFORNIA

THE STATE OF CALIFORNIA OR ITS OFFICERS OR AGENTS SHALL NOT BE RESPONSIBLE FOR THE ACCURACY OR COMPLETENESS OF SCANNED COPIES OF THIS PLAN SHEET.

NOTE:

1. NB OFF-RAMP TO BE CLOSED DURING CONSTRUCTION OF NB ROADWAY BETWEEN "A1" 806+50 AND 813+50. OPEN RAMP AS SOON AS THAT SEGMENT IS COMPLETE.

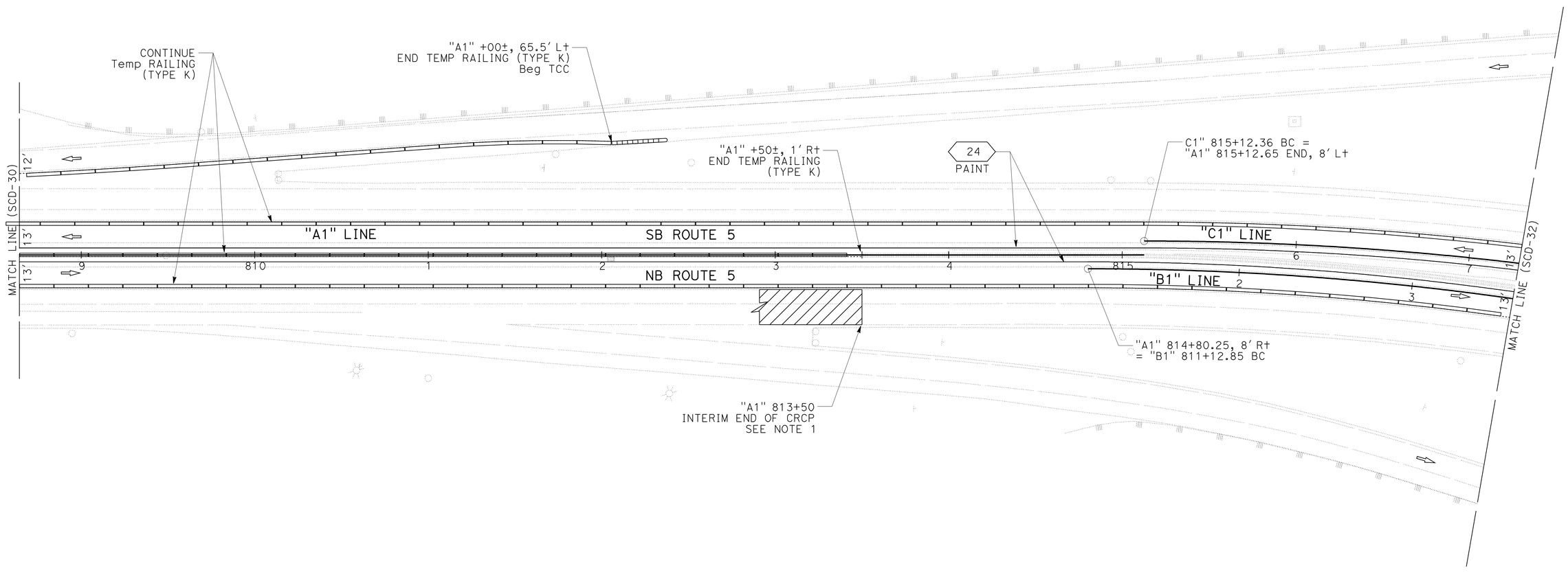

NB AND SB ROADWAYS

STAGE 2B

STAGE CONSTRUCTION AND TRAFFIC HANDLING DETAILS

SCALE: 1" = 30′

SCD-31

THIS PLAN ACCURATE FOR STAGE CONSTRUCTION AND TRAFFIC HANDLING WORK ONLY

R. WEBER	06-14-11
R. FLOOD	04-08-11
REVISED BY	DATE REVISED
ROBERT WEBER	
RUSSELL FLOOD	
CALCULATED-DESIGNED BY	
CHECKED BY	
FUNCTIONAL SUPERVISOR	
STEVE TOPAL	

STATE OF CALIFORNIA - DEPARTMENT OF TRANSPORTATION
Caltrans®
DESIGN

P:\proj1\02\3E760_plans\pse\23e760mb031.dgn

LAST REVISION 06-14-11
DATE PLOTTED => 17-AUG-2011
TIME PLOTTED => 11:01

Dist	COUNTY	ROUTE	POST MILES TOTAL PROJECT	SHEET No.	TOTAL SHEETS
02	Sis	5	R50.9/R58.2	212	329

Robert Weber 06-14-11
REGISTERED CIVIL ENGINEER DATE

06-15-11
PLANS APPROVAL DATE

REGISTERED PROFESSIONAL ENGINEER
ROBERT WEBER
No. C62511
Exp. 9-30-11
CIVIL
STATE OF CALIFORNIA

THE STATE OF CALIFORNIA OR ITS OFFICERS OR AGENTS SHALL NOT BE RESPONSIBLE FOR THE ACCURACY OR COMPLETENESS OF SCANNED COPIES OF THIS PLAN SHEET.

NOTE:

1. STRIPE CONFORM, "B1" 825+00±, 0′ Lt.

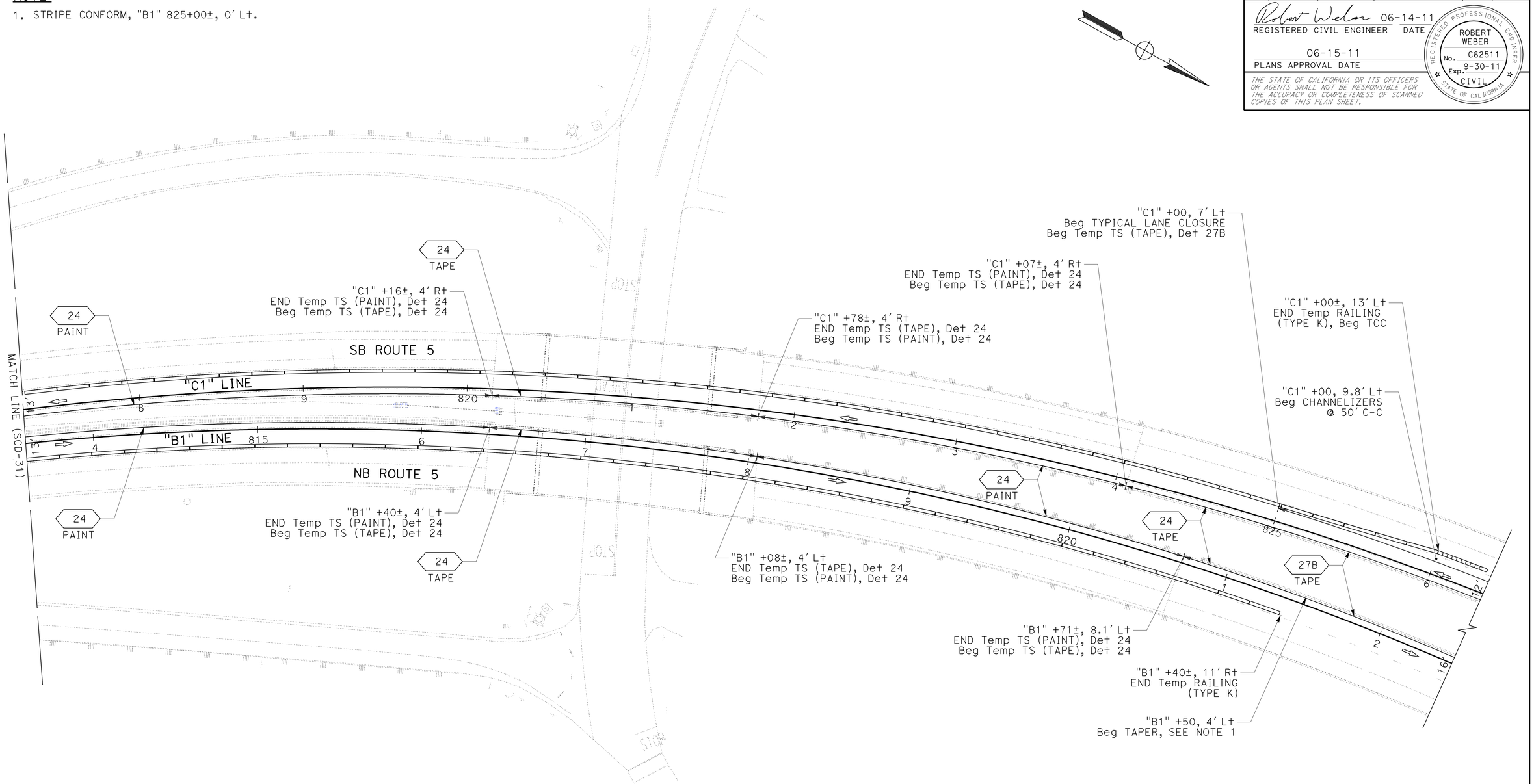

NB AND SB ROADWAYS

STAGE 2B

THIS PLAN ACCURATE FOR STAGE CONSTRUCTION AND TRAFFIC HANDLING WORK ONLY

STAGE CONSTRUCTION AND TRAFFIC HANDLING DETAILS

SCALE: 1" = 30′

SCD-32

REVISED BY	DATE REVISED
R. WEBER	06-14-11
R. FLOOD	04-08-11

CALCULATED-DESIGNED BY: ROBERT WEBER
CHECKED BY: RUSSELL FLOOD
FUNCTIONAL SUPERVISOR: STEVE TOPAL

STATE OF CALIFORNIA - DEPARTMENT OF TRANSPORTATION
Caltrans
DESIGN

P:\proj1\02\3E760_plans\pse\23e760mb032.dgn

LAST REVISION 06-14-11
DATE PLOTTED => 17-AUG-2011
TIME PLOTTED => 11:01

Dist	COUNTY	ROUTE	POST MILES TOTAL PROJECT	SHEET No.	TOTAL SHEETS
02	Sis	5	R50.9/R58.2	213	329

Robert Weber 06-14-11
REGISTERED CIVIL ENGINEER DATE

06-15-11
PLANS APPROVAL DATE

REGISTERED PROFESSIONAL ENGINEER ROBERT WEBER No. C62511 Exp. 9-30-11 CIVIL STATE OF CALIFORNIA

THE STATE OF CALIFORNIA OR ITS OFFICERS OR AGENTS SHALL NOT BE RESPONSIBLE FOR THE ACCURACY OR COMPLETENESS OF SCANNED COPIES OF THIS PLAN SHEET.

NOTES:

1. PROTECTS SHIFTED TRAFFIC FROM COLLISION WITH EXPOSED BRIDGE RAILING.
2. A STANDARD TEMPORARY CRASH CUSHION MAY BE USED IN-LIEU OF Temp RAILING (TYPE K).

LEGEND

P OBJECT MARKER (TYPE P)

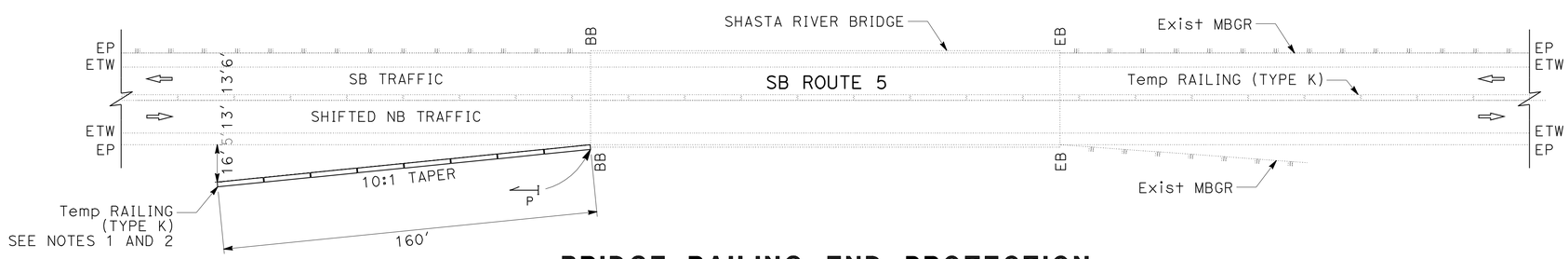

BRIDGE RAILING END PROTECTION

STAGE 1A
SHASTA RIVER BRIDGE (02-0148L)

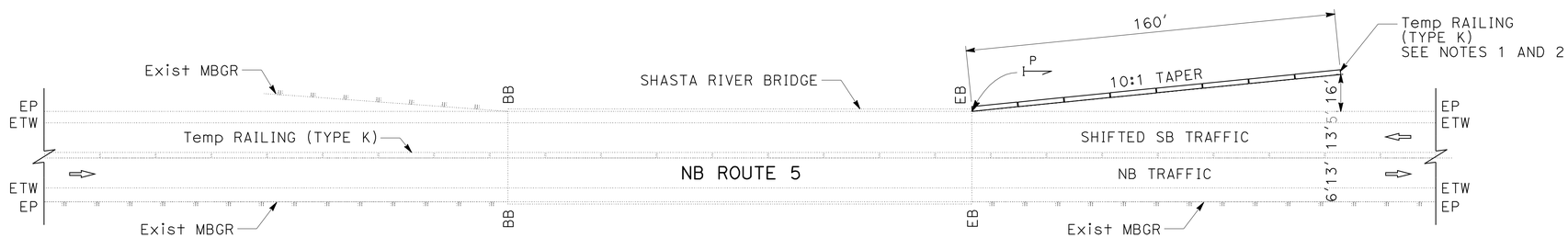

BRIDGE RAILING END PROTECTION

STAGE 3C
SHASTA RIVER BRIDGE (02-0148R)

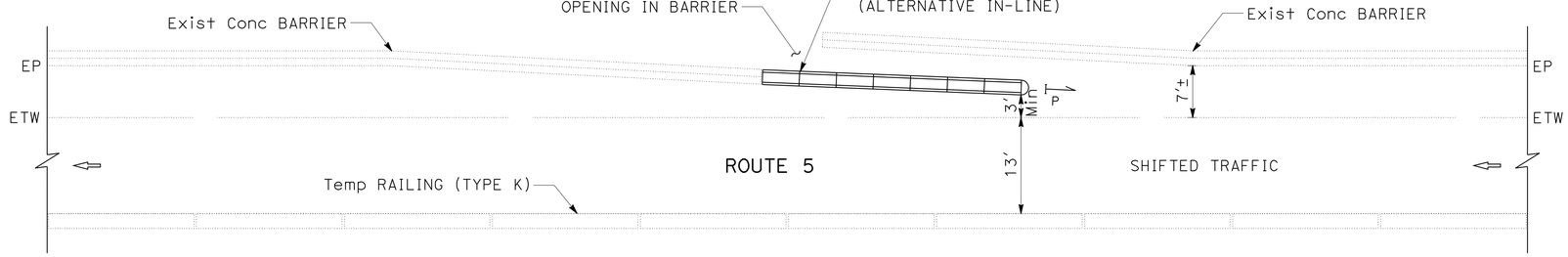

BARRIER OPENING END PROTECTION

STAGES 1A-1C, 3A-3C
AT VARIOUS LOCATIONS

Temp CRASH CUSHION (ALTERNATIVE IN-LINE)

Sta	NB	SB	OPENING TYPE
564+23	1	1	WILDLIFE PASSAGE L
587+20	1	1	FLASHING ARROW SIGN
644+29	1	1	WILDLIFE PASSAGE L
692+20	1	1	FLASHING ARROW SIGN
707+62	1	1	WILDLIFE PASSAGE L
797+18	1	1	FLASHING ARROW SIGN
TOTAL	12*		

* ADDITIONAL QUANTITIES SHOWN ON TRAFFIC HANDLING QUANTITY SHEETS

STAGE CONSTRUCTION DETAILS

NO SCALE

SCD-33

THIS PLAN ACCURATE FOR STAGE CONSTRUCTION AND TRAFFIC HANDLING WORK ONLY

REVISED BY	DATE REVISED
R. WEBER	06-06-11

CALCULATED-DESIGNED BY	CHECKED BY
WILL LESLIE	RUSSEL FLOOD

FUNCTIONAL SUPERVISOR: STEVE TOPAL

STATE OF CALIFORNIA - DEPARTMENT OF TRANSPORTATION
Caltrans
DESIGN

P:\proj\02\3E760_plans\pse\23e760mb033.dgn

LAST REVISION 06-14-11
DATE PLOTTED => 17-AUG-2011
TIME PLOTTED => 11:01

Dist	COUNTY	ROUTE	POST MILES TOTAL PROJECT	SHEET No.	TOTAL SHEETS
02	Sis	5	R50.9/R58.2	214	329

Robert Weber 06-14-11
REGISTERED CIVIL ENGINEER DATE

06-15-11
PLANS APPROVAL DATE

REGISTERED PROFESSIONAL ENGINEER ROBERT WEBER No. C62511 Exp. 9-30-11 CIVIL STATE OF CALIFORNIA

THE STATE OF CALIFORNIA OR ITS OFFICERS OR AGENTS SHALL NOT BE RESPONSIBLE FOR THE ACCURACY OR COMPLETENESS OF SCANNED COPIES OF THIS PLAN SHEET.

NOTE:

1. (N) - NOT A SEPARATE PAY ITEM, FOR INFORMATION ONLY

TRAFFIC HANDLING QUANTITIES

STATION	NORTHBOUND	SOUTHBOUND	TEMPORARY TRAFFIC STRIPE (TAPE)		TEMPORARY PAVEMENT MARKING (TAPE)	TEMPORARY TRAFFIC STRIPE (PAINT)		CHANNELIZER (SURFACE MOUNTED)	PAINT TRAFFIC STRIPE (2 COAT)					TEMPORARY RAILING (TYPE K)	TEMPORARY CRASH CUSHION (ALTERNATIVE IN-LINE)			(N) OBJECT MARKER (TYPE P)	REMOVE YELLOW THERMOPLASTIC TRAFFIC STRIPE (HAZZARDOUS WASTE)	REMOVE TRAFFIC STRIPE	REMOVE PAVEMENT MARKER	REMARKS
			YELLOW DETAIL 24	WHITE DETAIL 27B		YELLOW 4" DETAIL 24	WHITE 4" DETAIL 27B		YELLOW 4" DETAIL 24	WHITE 4" (BROKEN 17-7) DETAIL 8	WHITE 4" (BROKEN 36-12) DETAIL 11	WHITE 4" DETAIL 27B	WHITE 8"		TEMPORARY RAILING (TYPE K)	WILDLIFE PASSAGEWAY (TYPE L)	BARRIER OPENING (ARROW BOARD)					
			LF	LF	SQFT	LF	LF	EA	LF	LF	LF	LF	LF	LF	EA	EA	EA	EA	LF	LF	EA	
STAGE 1A																						
"A1" 420+00 TO 440+00	X			1000	126			26												580	32	TYPICAL LANE CLOSURE
"A1" 440+00 TO 573+30	X		1800	1800			11,550	43								1		1				NB TRAFFIC STRIPES
"A1" 446+50 TO 571+50														13,200								Temp RAILING (TYPE K)
"A1" 452+63 TO 454+23		X												160								PROTECT BRIDGE RAIL END
"A1" 568+00 TO 573+30	X													540								Temp RAILING (TYPE K)
"A1" 446+50 TO 568+00		X		350			14,620													3000		SB TRAFFIC STRIPES
"A1" 568+00 TO 591+50		X	1350	350	126			33											200	380	37	TYPICAL LANE CLOSURE
"C011" 10+00 TO 14+50	X																		450		10	REMOVE ETW (LEFT)
"A1" 425+00 TO 573+30	X								14,860		14,850	15,060										RESTORE NB STRIPES
"A1" 446+50 TO 571+50		X																		15,320		REMOVE ETW (RIGHT)
"A1" 446+50 TO 586+50		X							12,360		13,490	13,170	580							14,620		RESTORE SB STRIPES
"C011" 19+00 TO 21+63		X																	270		7	REMOVE ETW (LEFT)
"C031" 13+00 TO 16+33	X																		340		8	REMOVE ETW (LEFT)
"A1" 466+00 TO 490+50			2810	1820	126			28						1300								CROSSOVER 2
SUBTOTAL -- STAGE 1A			5960	5320	378		26,170	130	27,220		28,340	28,230	580	15,200		1		1	1260	33,900	94	
STAGE 1B																						
"A1" 546+25 TO 566+25	X			1000	126			26												580		TYPICAL LANE CLOSURE
"A1" 566+25 TO 708+00	X		980	1430			13,100	15								1	2	3				NB TRAFFIC STRIPES
"A1" 566+12 TO 571+50	X													540	1			1				Temp RAILING (TYPE K)
"A1" 568+00 TO 707+00														15,120								Temp RAILING (TYPE K)
"A1" 701+00 TO 708+00	X													700								Temp RAILING (TYPE K)
"A1" 567+00 TO 722+50		X		350			13,320													3800		SB TRAFFIC STRIPES
"A1" 704+00 TO 727+50		X	1360	350	126			28											200		5	TYPICAL LANE CLOSURE
"C032" 30+00 TO 32+00	X																		200		5	REMOVE ETW (LEFT)
"A1" 551+25 TO 708+00	X								14,090		14,100	14,140										RESTORE NB STRIPES
"A1" 567+00 TO 707+50		X																		14,020		REMOVE ETW (RIGHT)
"A1" 567+00 TO 722+50		X							14,150		15,190	13,320								13,320		RESTORE SB STRIPES
"C032" 31+30 TO 33+76		X																	250		6	REMOVE ETW (LEFT)
"C041" 10+00 TO 13+25		X																	330		8	REMOVE ETW (LEFT)
"C041" 12+75 TO 16+01	X																		330		8	REMOVE ETW (LEFT)
"A1" 568+00 TO 571+50														350								CLOSE CROSSOVER 3
SUBTOTAL -- STAGE 1B			2340	3130	252		26,420	69	28,240		29,290	27,460		16,710	1	1	2	4	1310	31,720	32	

STAGE CONSTRUCTION AND TRAFFIC HANDLING QUANTITIES

SCQ-1

RUSSELL FLOOD — REVISED BY
ROBERT WEBER — DATE REVISED
CALCULATED-DESIGNED BY
CHECKED BY
FUNCTIONAL SUPERVISOR
STEVE TOPAL
STATE OF CALIFORNIA - DEPARTMENT OF TRANSPORTATION
Caltrans®
DESIGN

P:\proj1\02\3E760_plans\pse\23e760mc001.dgn

LAST REVISION 06-14-11
DATE PLOTTED => 17-AUG-2011
TIME PLOTTED => 11:01

Dist	COUNTY	ROUTE	POST MILES TOTAL PROJECT	SHEET No.	TOTAL SHEETS
02	Sis	5	R50.9/R58.2	215	329

Robert Weber 06-14-11
REGISTERED CIVIL ENGINEER DATE

06-15-11
PLANS APPROVAL DATE

REGISTERED PROFESSIONAL ENGINEER ROBERT WEBER No. C62511 Exp. 9-30-11 CIVIL STATE OF CALIFORNIA

THE STATE OF CALIFORNIA OR ITS OFFICERS OR AGENTS SHALL NOT BE RESPONSIBLE FOR THE ACCURACY OR COMPLETENESS OF SCANNED COPIES OF THIS PLAN SHEET.

NOTE:

1. (N) - NOT A SEPARATE PAY ITEM, FOR INFORMATION ONLY

TRAFFIC HANDLING QUANTITIES

STATION	NORTHBOUND	SOUTHBOUND	TEMPORARY TRAFFIC STRIPE (TAPE)		TEMPORARY PAVEMENT MARKING (TAPE)	TEMPORARY TRAFFIC STRIPE (PAINT)		CHANNELIZER (SURFACE MOUNTED)	PAINT TRAFFIC STRIPE (2 COAT)					TEMPORARY RAILING (TYPE K)	TEMPORARY CRASH CUSHION (ALTERNATIVE IN-LINE)			(N) OBJECT MARKER (TYPE P)	REMOVE YELLOW THERMOPLASTIC TRAFFIC STRIPE (HAZARDOUS WASTE)	REMOVE TRAFFIC STRIPE	REMOVE PAVEMENT MARKER	REMARKS
			YELLOW DETAIL 24	WHITE DETAIL 27B		YELLOW 4" DETAIL 24	WHITE 4" DETAIL 27B		YELLOW 4" DETAIL 24	WHITE 4" (BROKEN 17-7) DETAIL 8	WHITE 4" (BROKEN 36-12) DETAIL 11	WHITE 4" DETAIL 27B	WHITE 8"		TEMPORARY RAILING (TYPE K)	WILDLIFE PASSAGEWAY (TYPE L)	BARRIER OPENING (ARROW BOARD)					
			LF	LF	SQFT	LF	LF	EA	LF	LF	LF	LF	LF	LF	EA	EA	EA	EA	LF	LF	EA	
STAGE 1C																						
"A1" 679+00 TO 699+00	X			1000	126			26												580		TYPICAL LANE CLOSURE
"A1" 699+00 TO 814+00	X		1270	1370			9900	5								1	1	2				NB TRAFFIC STRIPES
"TNR1" 20+00 TO 25+65	X		340	570																		NB OFF KLAMATH RIVER Rd
"A1" 699+06 TO 707+00	X													800	1			1				Temp RAILING (TYPE K)
"A1" 701+00 TO 813+50														14,600								Temp RAILING (TYPE K)
"A1" 803+00 TO 808+36	X													540								Temp RAILING (TYPE K)
"A1" 703+00 TO "C1" 812+50		X	1050	1130			9890	4												2690		SB TRAFFIC STRIPES
"TSR1" 12+00 TO 23+36		X				1140	1120													1120		SB ON KLAMATH RIVER Rd
"A1" 812+50 TO "C1" 832+50		X	1010		126			21											200		5	TYPICAL LANE CLOSURE
"CO42" 30+00 TO 33+00	X																		300		7	REMOVE ETW (LEFT)
"A1" 700+00 TO 814+00	X								11,410		12,910	11,480										RESTORE NB STRIPES
"A1" 808+00 TO 810+00	X																			50	5	REMOVE LANE LINE
"A1" 703+00 TO 811+82		X																		10,870		REMOVE ETW (RIGHT)
"A1" 703+00 TO "C1" 827+50		X							11,080	280	12,350	10,870								9900		RESTORE SB STRIPES
"CO42" 33+00 TO 36+01		X																	300		7	REMOVE ETW (LEFT)
"A1" 805+00 TO 811+25		X																	630		14	REMOVE ETW (LEFT)
"A1" 807+00 TO 814+00	X																		700		16	REMOVE ETW (LEFT)
"A1" 701+00 TO 707+00														600								CLOSE CROSSOVER 4
SUBTOTAL -- STAGE 1C			3670	4070	252	1140	20,910	56	22,490	280	25,260	22,350		16,540	1	1	1	3	2130	25,210	54	
STAGE 2A																						
"A1" 781+00 TO 806+50	X		1010	560	126			32												200		TYPICAL LANE CLOSURE
"A1" 806+50 TO "B1" 827+10	X		1360	1140		1620	1120	63														NB TRAFFIC STRIPES
"A1" 801+00 TO "B1" 827+10	X																			2960		REMOVE ETW (RIGHT)
"A1" 791+00 TO 801+00	X																			380		REMOVE LANE LINE
"A1" 800+00 TO "C1" 825+00		X	460	260		2050	1820	41												100		SB TRAFFIC STRIPES
"C1" 825+00 TO 851+50		X	1570	1530	126			39											200		5	TYPICAL LANE CLOSURE
"A1" 801+50 TO 805+12		X												360	1			1				Temp RAILING (TYPE K)
"A1" 811+82 TO "C1" 830+50		X																		1890		REMOVE ETW (RIGHT)
"C1" 830+50 TO 845+50		X																		380	32	REMOVE LANE LINE
SUBTOTAL -- STAGE 2A			4400	3490	252	3670	2940	175						360	1			1	200	5910	37	

STAGE CONSTRUCTION AND TRAFFIC HANDLING QUANTITIES

SCQ-2

REVISED BY | DATE REVISED
RUSSELL FLOOD | ROBERT WEBER
CALCULATED-DESIGNED BY | CHECKED BY
FUNCTIONAL SUPERVISOR: STEVE TOPAL
STATE OF CALIFORNIA - DEPARTMENT OF TRANSPORTATION
Caltrans® DESIGN
P:\proj1\02\3E760_plans\pse\23e760mc002.dgn

LAST REVISION 06-14-11 | DATE PLOTTED => 17-AUG-2011 | TIME PLOTTED => 11:01

Dist	COUNTY	ROUTE	POST MILES TOTAL PROJECT	SHEET No.	TOTAL SHEETS
02	Sis	5	R50.9/R58.2	216	329

Robert Weber 06-14-11
REGISTERED CIVIL ENGINEER DATE

06-15-11
PLANS APPROVAL DATE

REGISTERED PROFESSIONAL ENGINEER ROBERT WEBER No. C62511 Exp. 9-30-11 CIVIL STATE OF CALIFORNIA

THE STATE OF CALIFORNIA OR ITS OFFICERS OR AGENTS SHALL NOT BE RESPONSIBLE FOR THE ACCURACY OR COMPLETENESS OF SCANNED COPIES OF THIS PLAN SHEET.

NOTE:

1. (N) - NOT A SEPARATE PAY ITEM, FOR INFORMATION ONLY

TRAFFIC HANDLING QUANTITIES

STATION	NORTHBOUND	SOUTHBOUND	TEMPORARY TRAFFIC STRIPE (TAPE)		TEMPORARY PAVEMENT MARKING (TAPE)	TEMPORARY TRAFFIC STRIPE (PAINT)		CHANNELIZER (SURFACE MOUNTED)	PAINT TRAFFIC STRIPE (2 COAT)					TEMPORARY RAILING (TYPE K)	TEMPORARY CRASH CUSHION (ALTERNATIVE IN-LINE)			(N) OBJECT MARKER (TYPE P)	REMOVE YELLOW THERMOPLASTIC TRAFFIC STRIPE (HAZZARDOUS WASTE)	REMOVE TRAFFIC STRIPE	REMOVE PAVEMENT MARKER	REMARKS
			YELLOW DETAIL 24	WHITE DETAIL 27B		YELLOW 4" DETAIL 24	WHITE 4" DETAIL 27B		YELLOW 4" DETAIL 24	WHITE 4" (BROKEN 17-7) DETAIL 8	WHITE 4" (BROKEN 36-12) DETAIL 11	WHITE 4" DETAIL 27B	WHITE 8"		TEMPORARY RAILING (TYPE K)	WILDLIFE PASSAGEWAY (TYPE L)	BARRIER OPENING (ARROW BOARD)					
			LF	LF	SQFT	LF	LF	EA	LF	LF	LF	LF	LF	LF	EA	EA	EA	EA	LF	LF	EA	
STAGE 2B																						
"A1" 782+00 TO "B1" 805+50	X		360	1320	126			32												580		TYPICAL LANE CLOSURE
"A1" 805+50 TO "B1" 825+00	X		600			1780														420		NB TRAFFIC STRIPES
"A1" 804+46 TO "B1" 821+40	X													2060	1			1				Temp RAILING (TYPE K)
"A1" 809+50 TO 813+30	X		400	400				8														TO OPEN OFF RAMP
"B1" 820+71 TO 825+00	X																		430		10	REMOVE ETW (LEFT)
"A1" 797+50 TO "C1" 825+00		X	260			2500																SB TRAFFIC STRIPES
"C1" 825+00 TO 849+50		X	450	1460	126			27												580	32	TYPICAL LANE CLOSURE
"A1" 801+00 TO "C1" 826+00		X												2500	1			1				Temp RAILING (TYPE K)
SB ON FROM KLAMATH RIVER RD		X												760	1			1				Temp RAILING (TYPE K)
"C1" 824+07 TO 829+50		X																	550		12	REMOVE ETW (LEFT)
"A1" 787+00 TO "B1" 825+00	X								2870		3760	1610	280							1730		RESTORE NB STRIPES
NB OFF TO KLAMATH RIVER RD									700			1130	280									RESTORE STRIPES
"A1" 797+50 TO "C1" 844+50		X							2970	280	4270	680										RESTORE SB STRIPES
SB ON FROM KLAMATH RIVER RD									1050			1630	290									RESTORE STRIPES
"A1" 803+00 TO 813+50														1060								CLOSE CROSSOVER 5
SUBTOTAL -- STAGE 2B			2070	3180	252	4280		67	7590	280	8030	5050	850	6380	3			3	980	3310	54	
STAGE 3A																						
"A1" 680+50 TO 704+00	X		1350		126		350	28												670		TYPICAL LANE CLOSURE
"A1" 704+00 TO "B1" 814+00	X		200				11,240	15								1	1	2		3140		NB TRAFFIC STRIPES
"A1" 700+00 TO 707+00														700								Temp RAILING (TYPE K)
"A1" 701+00 TO 813+50														11,500								Temp RAILING (TYPE K)
"A1" 700+00 TO 815+00		X	2990	2230			9710	16														SB TRAFFIC STRIPES
"A1" 815+00 TO "C1" 831+00		X		1110	126			29												580		TYPICAL LANE CLOSURE
"A1" 685+50 TO "B1" 814+00	X								11,260		12,560	11,400	360							11,400		RESTORE NB STRIPES
"A1" 700+50 TO 810+00	X																			10,970		REMOVE ETW (RIGHT)
"A1" 803+00 TO "TSR2" 45+40														560	1			1				Temp RAILING (TYPE K)
"A1" 701+00 TO "C1" 824+08		X							11,500	280	12,410	10,250	290									RESTORE SB STRIPES
"CO43" 50+00 TO 53+00		X																		300		REMOVE ETW (LEFT)
"CO43" 52+50 TO 56+01	X																			350		REMOVE ETW (LEFT)
"A1" 803+00 TO "CO52" 54+00	X																			950		REMOVE ETW (LEFT)
"CO52" 53+00 TO 56+51		X																		350		REMOVE ETW (LEFT)
"B1" 820+71 TO 825+00	X								430													ETW (LEFT)
"B1" 820+71 TO 827+50	X											680										ETW (RIGHT)
"C1" 824+07 TO 828+00		X							400													ETW (LEFT)
"C1" 824+07 TO 826+00		X									200											LANE LINE
"C1" 829+50 TO 845+50		X									1610											LANE LINE
"C1" 824+07 TO 831+00		X										710										ETW (RIGHT)
"A1" 803+00 TO 813+50														1050								CLOSE CROSSOVER 5
SUBTOTAL -- STAGE 3A			4540	3340	252		21,300	88	23,590	280	26,780	23,040	650	13,810	1	1	1	3		28,710		

STAGE CONSTRUCTION AND TRAFFIC HANDLING QUANTITIES

SCQ-3

REVISED BY | DATE REVISED
RUSSELL FLOOD | ROBERT WEBER
CALCULATED-DESIGNED BY | CHECKED BY
FUNCTIONAL SUPERVISOR
STEVE TOPAL
STATE OF CALIFORNIA - DEPARTMENT OF TRANSPORTATION
Caltrans
DESIGN

P:\proj1\02\3E760\plans\pse\23e760mc003.dgn

LAST REVISION 06-14-11 | DATE PLOTTED => 17-AUG-2011 | TIME PLOTTED => 11:01

Dist	COUNTY	ROUTE	POST MILES TOTAL PROJECT	SHEET No.	TOTAL SHEETS
02	Sis	5	R50.9/R58.2	217	329

Robert Weber 06-14-11
REGISTERED CIVIL ENGINEER DATE

06-15-11
PLANS APPROVAL DATE

REGISTERED PROFESSIONAL ENGINEER ROBERT WEBER No. C62511 Exp. 9-30-11 CIVIL STATE OF CALIFORNIA

THE STATE OF CALIFORNIA OR ITS OFFICERS OR AGENTS SHALL NOT BE RESPONSIBLE FOR THE ACCURACY OR COMPLETENESS OF SCANNED COPIES OF THIS PLAN SHEET.

NOTE:

1. (N) - NOT A SEPARATE PAY ITEM, FOR INFORMATION ONLY

TRAFFIC HANDLING QUANTITIES

STATION	NORTHBOUND	SOUTHBOUND	TEMPORARY TRAFFIC STRIPE (TAPE)		TEMPORARY PAVEMENT MARKING (TAPE)	TEMPORARY TRAFFIC STRIPE (PAINT)		CHANNELIZER (SURFACE MOUNTED)	PAINT TRAFFIC STRIPE (2-COAT)					TEMPORARY RAILING (TYPE K)	TEMPORARY CRASH CUSHION (ALTERNATIVE IN-LINE)			(N)		*		REMARKS
			YELLOW DETAIL 24	WHITE DETAIL 27B		YELLOW 4" DETAIL 24	WHITE 4" DETAIL 27B		YELLOW 4" DETAIL 24	WHITE 4" (BROKEN 17-7) DETAIL 8	WHITE 4" (BROKEN 36-12) DETAIL 11	WHITE 4" DETAIL 27B	WHITE 8"		TEMPORARY RAILING (TYPE K)	WILDLIFE PASSAGEWAY (TYPE L)	BARRIER OPENING (ARROW BOARD)	OBJECT MARKER (TYPE P)	REMOVE YELLOW THERMOPLASTIC TRAFFIC STRIPE (HAZZARDOUS WASTE)	REMOVE TRAFFIC STRIPE	REMOVE PAVEMENT MARKER	
			LF	LF	SQFT	LF	LF	EA	LF	LF	LF	LF	LF	LF	EA	EA	EA	EA	LF	LF	EA	
STAGE 3B																						
"A1" 552+50 TO 567+70	X		1060		126			27												580		TYPICAL LANE CLOSURE
"A1" 567+70 TO 707+00	X		390				14,040	9								1	2	3		3370		NB TRAFFIC STRIPES
"CO33" 50+00 TO 55+78		X												580								Temp RAILING (TYPE K)
"A1" 568+00 TO 707+00														13,920								Temp RAILING (TYPE K)
"A1" 701+00 TO 709+06		X												800								Temp RAILING (TYPE K)
"A1" 565+75 TO 709+00		X	1180	860			13,060															SB TRAFFIC STRIPES
"A1" 709+00 TO 729+00		X		1010	126			27												580		TYPICAL LANE CLOSURE
"CO33" 50+00 TO 54+00		X																		400		REMOVE ETW (LEFT)
"A1" 552+50 TO 707+00	X								13,910		14,950	14,040								14,040		RESTORE NB STRIPES
"A1" 567+00 TO 707+00	X																			14,040		REMOVE ETW (RIGHT)
"A1" 565+75 TO 724+00		X							14,220		15,820	13,470										RESTORE SB STRIPES
"CO33" 53+00 TO 55+78	X																			280		REMOVE ETW (LEFT)
"CO44" 70+00 TO 73+00	X																			300		REMOVE ETW (LEFT)
"CO44" 73+00 TO 76+01		X																		300		REMOVE ETW (LEFT)
"A1" 701+00 TO 707+00														600								CLOSE CROSSOVER 4
SUBTOTAL -- STAGE 3B			2630	1870	252		27,100	63	28,130		30,770	27,510		15,900		1	2	3		33,890		
STAGE 3C																						
"A1" 431+50 TO 450+00	X		1420	350	126			35											200	380	5	TYPICAL LANE CLOSURE
"A1" 450+00 TO 572+50	X		150				12,250									1		1				NB TRAFFIC STRIPES
"A1" 442+00 TO 571+50														12,940								Temp RAILING (TYPE K)
"A1" 459+70 TO 461+30														160								PROTECT BRIDGE RAIL END
"A1" 568+00 TO 573+00														500	1			1				Temp RAILING (TYPE K)
"A1" 442+00 TO 572+50		X	1340	1110			11,680	26														SB TRAFFIC STRIPES
"A1" 572+50 TO 587+50		X		1040	126			27												580		TYPICAL LANE CLOSURE
"CO12" 30+00 TO 32+50		X																	250		7	REMOVE ETW (LEFT)
"A1" 431+50 TO 572+50	X																			12,490		RESTORE NB STRIPES
"A1" 446+50 TO 572+50	X																			12,490		REMOVE ETW (RIGHT)
"CO12" 36+50 TO 39+52	X																		300		8	REMOVE ETW (LEFT)
"CO34" 70+00 TO 72+50	X																			250		REMOVE ETW (LEFT)
"CO34" 72+00 TO 73+81		X																		180		REMOVE ETW (LEFT)
"A1" 568+00 TO 571+50														350								CLOSE CROSSOVER 3
SUBTOTAL -- STAGE 3C			2910	2500	252		23,930	88						13,950	1	1		2	750	26,370	20	
SUBTOTAL			28,520	26,900		9090	148,770		137,260	840	148,470	133,640	2080		8	6	6					
TOTAL			55,420		2142	157,860		736	422,290					98,850	20			20	6630	189,020	291	

* INCLUDED IN TRAFFIC STRIPES AND PAVEMENT MARKERS QUANTITY TABLE (SHEET PDQ-1)

STAGE CONSTRUCTION AND TRAFFIC HANDLING QUANTITIES

SCQ-4

REVISED BY | DATE REVISED
RUSSELL FLOOD | ROBERT WEBER
CALCULATED-DESIGNED BY | CHECKED BY
FUNCTIONAL SUPERVISOR: STEVE TOPAL
STATE OF CALIFORNIA - DEPARTMENT OF TRANSPORTATION
Caltrans® DESIGN

P:\proj1\02\3E760_plans\pse\23e760mc004.dgn

LAST REVISION 06-14-11 | DATE PLOTTED => 17-AUG-2011 | TIME PLOTTED => 11:02

Dist	COUNTY	ROUTE	POST MILES TOTAL PROJECT	SHEET No.	TOTAL SHEETS
02	Sis	5	R50.9/R58.2	218	329

Robert Weber 06-14-11
REGISTERED CIVIL ENGINEER DATE

06-15-11
PLANS APPROVAL DATE

REGISTERED PROFESSIONAL ENGINEER ROBERT WEBER No. C62511 Exp. 9-30-11 CIVIL STATE OF CALIFORNIA

THE STATE OF CALIFORNIA OR ITS OFFICERS OR AGENTS SHALL NOT BE RESPONSIBLE FOR THE ACCURACY OR COMPLETENESS OF SCANNED COPIES OF THIS PLAN SHEET.

NOTES:

* INCLUDED IN TOTALS ON Q-1 SHEET

** INCLUDED IN TOTALS ON STAGE CONSTRUCTION QUANTITIES TABLE.

STAGE CONSTRUCTION QUANTITIES

STATION	NORTHBOUND	SOUTHBOUND	* REMOVE ASPHALT CONCRETE	* RESET PORTABLE CONCRETE BARRIER (TYPE 60K)	* REMOVE CONCRETE BARRIER	* ROADWAY EXCAVATION	* IMPORTED MATERIAL (SHOULDER BACKING)	* CLASS 2 AGGREGATE BASE	* REPLACE ASPHALT CONCRETE SURFACING	* HOT MIX ASPHALT	RUMBLE STRIP	* TACK COAT	* CONCRETE BARRIER MARKER	* CONCRETE BARRIER (TYPE 60)	* CONCRETE BARRIER (TYPE 60C)	REMARKS
			CY	LF	LF	CY	TON	CY	CY	TON	STA	TON	EA	LF	LF	
STAGE 1A																
"A1" 442+00 TO 451+50						4280		2851		3080		1.8				CROSSOVER 1
"A1" 466+00 TO 474+51						3760		2502		2710		1.6				CROSSOVER 2
"A1" 568+00 TO 571+50					350	630		416		450		0.3				CROSSOVER 3
"A1" 440+00 TO 442+00	X								15							REPLACE AC SURFACING
"A1" 446+50 TO 453+93	X								33			0.2				REPLACE AC SURFACING
"A1" 446+50 TO 454+12		X							34			0.1				REPLACE AC SURFACING
"A1" 461+00 TO 480+00		X							220			0.3				REPLACE AC SURFACING
"A1" 491+00 TO 500+25		X							102			0.1				REPLACE AC SURFACING
"A1" 504+50 TO 572+00		X							753			1.0				REPLACE AC SURFACING
SUBTOTAL -- STAGE 1A					350	8670		5769	1157	6240		5.4				
STAGE 1B																
"A1" 701+00 TO 707+00					600	510		336		370		0.2				CROSSOVER 4
"A1" 572+00 TO 604+00		X							356			0.5				REPLACE AC SURFACING
"A1" 604+00 TO 708+00		X							1156			4.4				REPLACE AC SURFACING
"A1" 700+00 TO 701+00		X							7							REPLACE AC SURFACING
"A1" 707+00 TO 708+00	X								7							REPLACE AC SURFACING
SUBTOTAL -- STAGE 1B					600	510		336	1526	370		5.1				
STAGE 1C																
"A1" 803+00 TO 813+50				170	1050	930		619		670		0.4				CROSSOVER 5
"A1" 708+00 TO 798+00		X							998			3.8				REPLACE AC SURFACING
"A1" 798+00 TO 801+00		X							22			0.1				REPLACE AC SURFACING
"A1" 800+00 TO 809+00	X								135			0.2				REPLACE AC SURFACING
"A1" 810+12 TO "C1" 820+45		X							155			0.6				REPLACE AC SURFACING
"A1" 813+20 TO "B1" 816+71	X								105			0.1				REPLACE AC SURFACING
SUBTOTAL -- STAGE 1C				170	1050	930		619	1415	670		5.2				
STAGE 4A																
"A1" 442+00 TO 451+50			617				34									CROSSOVER 1
"A1" 466+00 TO 488+90			1103				193									CROSSOVER 2
"A1" 566+50 TO 573+50						530							8	108	242	CROSSOVER 3
"A1" 701+00 TO 707+00						430							14	600		CROSSOVER 4
"A1" 803+00 TO 814+00						780							23	392	658	CROSSOVER 5
SUBTOTAL -- STAGE 4A			1720			1740	227						45	1100	900	
STAGE 4B																
"A1" 440+00 TO 451+50	X										11.5					
"A1" 442+00 TO 451+50		X									9.5					
"A1" 446+50 TO 453+93	X										7.4					
"A1" 448+00 TO 454+12		X									6.1					
SUBTOTAL -- STAGE 4B											34.5					
FROM Temp TRANSVERSE Const JOINTS						50										
FROM CONFORM CROSSOVERS										763		1.8				
TOTAL			1720	170	2000	11,900	227	6724	4098	8043	34.5	17.5	45	1100	900	

TEMPORARY TRANSVERSE CONSTRUCTION JOINTS

CROSSOVER NUMBER	STAGE	STATION	** ROADWAY Exc	* CRCP
			CY	CY
3	1A	"A1" 569+40, R†	6.5	6.5
3	3B	"A1" 569+82, L†	16.2	16.2
4	1B	"A1" 704+00, R†	6.5	6.5
4	3A	"A1" 704+00, L†	6.5	6.5
5	1C	"A1" 806+50, R†	6.5	6.5
5	2A	"A1" 802+00, 7'-20' L†	2.4	2.4
5	2B	"A1" 802+00, 20'-47.5' L†	5.1	5.1
		TOTAL	49.7	49.7

CONFORM CROSSOVERS TO CRCP

STATION	NORTHBOUND	SOUTHBOUND	CROSSOVER NUMBER	STAGE	* COLD PLANE ASPHALT CONCRETE PAVEMENT	** HOT MIX ASPHALT	** TACK COAT
					SQYD	TON	TON
"A1" 474+51 TO 479+64	X		2	1A	228	49	0.1
"A1" 474+51 TO 479+64		X	2	3C	228	49	0.1
"A1" 567+75 TO 569+40	X		3	1A	119	26	0.1
"A1" 569+40 TO 572+00	X		3	1B	188	41	0.1
"A1" 569+82 TO 572+00		X	3	3B	157	34	0.1
"A1" 567+75 TO 569+82		X	3	3C	150	32	0.1
"A1" 701+00 TO 704+00	X		4	1B	217	47	0.1
"A1" 704+00 TO 707+00	X		4	1C	217	47	0.1
"A1" 701+00 TO 704+00		X	4	3A	217	47	0.1
"A1" 704+00 TO 707+00		X	4	3B	217	47	0.1
"A1" 802+75 TO 806+50	X		5	1C	271	59	0.1
"A1" 806+50 TO 813+50	X		5	2A	506	109	0.3
"A1" 802+75 TO 813+50		X	5	2A	813	176	0.4
TOTAL					3528	763	1.8

STAGE CONSTRUCTION AND TRAFFIC HANDLING QUANTITIES

SCQ-5

REVISED BY	DATE REVISED
R. WEBER	06-03-11

RUSSELL FLOOD — ROBERT WEBER — CALCULATED-DESIGNED BY — CHECKED BY — FUNCTIONAL SUPERVISOR — STEVE TOPAL

STATE OF CALIFORNIA - DEPARTMENT OF TRANSPORTATION

Caltrans DESIGN

P:\proj1\02\3E760_plans\pse\23e760mc005.dgn

LAST REVISION 06-14-11 | DATE PLOTTED => 17-AUG-2011 | TIME PLOTTED => 11:02

Dist	COUNTY	ROUTE	POST MILES TOTAL PROJECT	SHEET No.	TOTAL SHEETS
02	Sis	5	R50.9/R58.2	219	329

Robert Weber 06-14-11
REGISTERED CIVIL ENGINEER DATE

06-15-11
PLANS APPROVAL DATE

REGISTERED PROFESSIONAL ENGINEER ROBERT WEBER No. C62511 Exp. 9-30-11 CIVIL STATE OF CALIFORNIA

THE STATE OF CALIFORNIA OR ITS OFFICERS OR AGENTS SHALL NOT BE RESPONSIBLE FOR THE ACCURACY OR COMPLETENESS OF SCANNED COPIES OF THIS PLAN SHEET.

NOTES:

1. SIGNS SHOWN WITH (CA) INDICATE CALIFORNIA SIGN CODES, OTHERWISE FEDERAL SIGN CODES ARE SHOWN.
2. EXACT SIGN LOCATION TO BE DETERMINED BY THE ENGINEER.
3. SEE STANDARD PLAN T-10A FOR ADDITIONAL REQUIREMENTS.

LEGEND

FLAGGER

PORTABLE CHANGEABLE MESSAGE SIGN (PCMS)

X X X RAMP CLOSED

STATIONARY MOUNTED SIGN

CONSTRUCTION AREA SIGNS (PORTABLE)

SIGN TYPE ○	SIGN CODE	MESSAGE	PANEL SIZE	No. OF SIGNS
1	M4-10(L†) G27-2(5)(CA) M3-1(CA)	DETOUR (L† ARROW) ROUTE 5 NORTH	48" x 18" 25" x 24" 26" x 12"	1
2	M4-10(R†) G27-2(5)(CA) M3-1(CA)	DETOUR (R† ARROW) ROUTE 5 NORTH	48" x 18" 25" x 24" 26" x 12"	1
3	M4-10(L†) G27-2(5)(CA) M3-3(CA)	DETOUR (L† ARROW) ROUTE 5 SOUTH	48" x 18" 25" x 24" 26" x 12"	1
4	M4-10(R†) G27-2(5)(CA) M3-3(CA)	DETOUR (R† ARROW) ROUTE 5 SOUTH	48" x 18" 25" x 24" 26" x 12"	1
5	M4-8a	END DETOUR	24" x 18"	2
			TOTAL THIS SHEET	6

PCMS MESSAGES

PRE-CLOSURE: PLACE PCMS 7 DAYS PRIOR TO CLOSURE AND ACTIVATE

(A)

FRAME 1	FRAME 2
FREEWAY WILL BE CLOSED	DAY DATE X PM - Y AM

DURING CLOSURE: MOVE PCMS Approx 1000' BEFORE CLOSURE LOCATION AND ACTIVATE

(B)

FRAME 1	FRAME 2
FREEWAY CLOSED	FOLLOW DETOUR

TRAFFIC DETOUR PLAN 1

NB Rte 5 CLOSED BETWEEN KLAMATH RIVER RD OFF-RAMP AND Rte 96 ON-RAMP:
TAKE KLAMATH RIVER Rd OFF-RAMP
TURN LEFT ON KLAMATH RIVER Rd
PROCEEED WEST ON KLAMATH RIVER Rd
TURN RIGHT ON NB ENTRANCE RAMP TO Rte 5

TRAFFIC DETOUR PLAN 2

SB Rte 5 CLOSED BETWEEN Rte 96 OFF-RAMP AND KLAMATH RIVER RD ON-RAMP:
TAKE Rte 96 OFF-RAMP
TURN LEFT ON KLAMATH RIVER Rd
TURN RIGHT ON SB ON-RAMP TO Rte 5

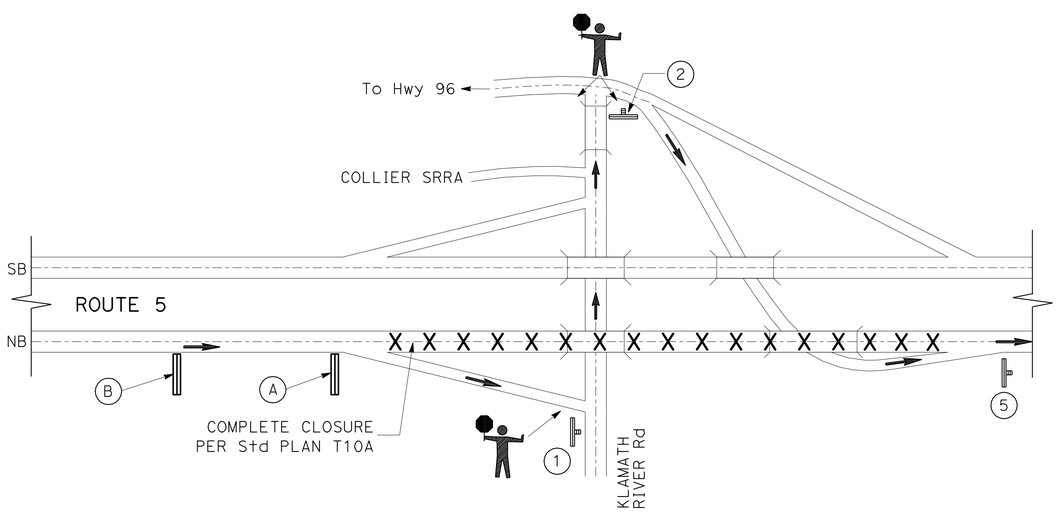

PM 58.12
EXIT 786

ROUTE 5 CLOSURE DETOUR SIGNING

NB ROUTE 5 AT EXIT 786

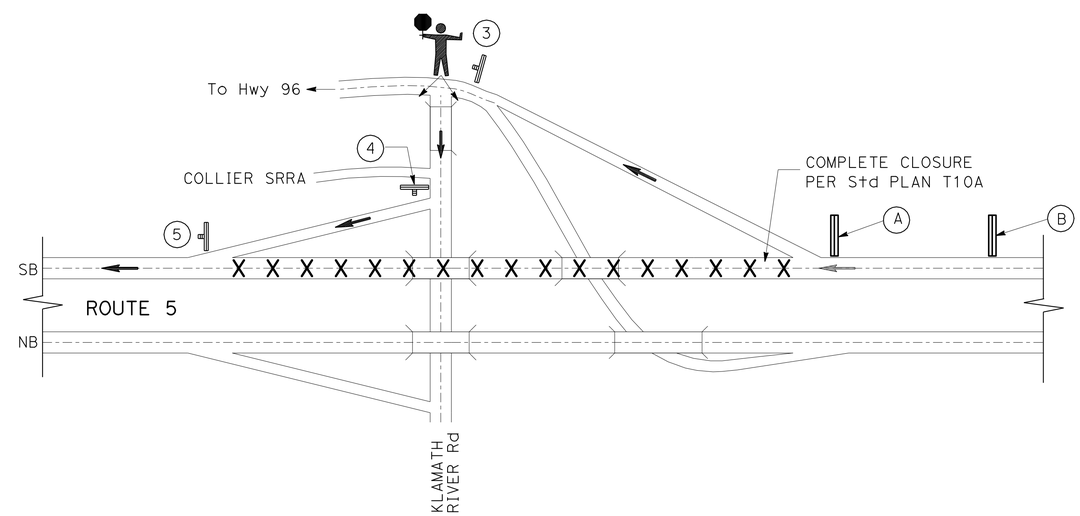

PM 58.12
EXIT 786

ROUTE 5 CLOSURE DETOUR SIGNING

SB ROUTE 5 AT EXIT 786

THIS PLAN ACCURATE FOR DETOUR WORK ONLY

DETOUR PLAN

NO SCALE

DE-1

STATE OF CALIFORNIA - DEPARTMENT OF TRANSPORTATION
Caltrans DESIGN

FUNCTIONAL SUPERVISOR: STEVE TOPAL
CALCULATED-DESIGNED BY: RUSSELL FLOOD
CHECKED BY: ROBERT WEBER
REVISED BY: R. WEBER
DATE REVISED: 06-02-11

P:\proj1\02\3E760_plans\pse\23e760mg001.dgn

LAST REVISION 06-14-11
DATE PLOTTED => 17-AUG-2011
TIME PLOTTED => 11:02

Dist	COUNTY	ROUTE	POST MILES TOTAL PROJECT	SHEET No.	TOTAL SHEETS
02	Sis	5	R50.9/R58.2	220	329

Robert Weber 06-14-11
REGISTERED CIVIL ENGINEER DATE

06-15-11
PLANS APPROVAL DATE

REGISTERED PROFESSIONAL ENGINEER ROBERT WEBER No. C62511 Exp. 9-30-11 CIVIL STATE OF CALIFORNIA

THE STATE OF CALIFORNIA OR ITS OFFICERS OR AGENTS SHALL NOT BE RESPONSIBLE FOR THE ACCURACY OR COMPLETENESS OF SCANNED COPIES OF THIS PLAN SHEET.

NOTES:

1. IF AVAILABLE, EXISTING ROUTE SHIELDS AND DIRECTIONS MAY BE USED IN PLACE OF SIGNS SHOWN.
2. SIGNS SHOWN WITH (CA) INDICATE CALIFORNIA SIGN CODES, OTHERWISE FEDERAL SIGN CODES ARE SHOWN.
3. EXACT SIGN AND PCMS LOCATIONS TO BE DETERMINED BY THE ENGINEER.
4. SEE STANDARD PLAN T-14 FOR ADDITIONAL REQUIREMENTS.
5. PLACE SIGNS BETWEEN INTERCHANGES EVERY 1 MILE.

TRAFFIC DETOUR PLAN 1

SB ON-RAMP CLOSED AT KLAMATH RIVER RD:
PROCEED WEST ON KLAMATH RIVER RD
TURN RIGHT ON NB ENTRANCE RAMP TO Rte 5
PROCEED NORTH ON Rte 5 TO HENLEY/HORNBROOK
TURN LEFT AT END OF RAMP
TURN LEFT AT SB ON-RAMP TO Rte 5

TRAFFIC DETOUR PLAN 2

NB OFF-RAMP CLOSED AT KLAMATH RIVER RD:
PROCEED NORTH ON Rte 5 TO HENLEY/HORNBROOK
TURN LEFT AT END OF RAMP
TURN LEFT AT SB ON-RAMP TO Rte 5
EXIT AT Rte 96

CONSTRUCTION AREA SIGNS (PORTABLE)

SIGN TYPE ○	SIGN CODE	MESSAGE	PANEL SIZE	No. OF SIGNS
1*	SC6-3(CA) OR SC6-4(CA)	RAMP CLOSED (DATE-TIME) RAMP CLOSED (DATE-DATE)	48" x 48" 48" x 60"	2
2	M4-10(Lt) G27-2(5)(CA) M3-3(CA)	DETOUR (Lt ARROW) ROUTE 5 SOUTH	48" x 18" 25" x 24" 26" x 12"	3
3	SC3(CA) G27-2(5)(CA) M3-3(CA)	DETOUR (UP ARROW) ROUTE 5 SOUTH	48" x 18" 25" x 24" 26" x 12"	5
4	M4-10(Rt) G27-2(5)(CA) M3-3(CA)	DETOUR (Rt ARROW) ROUTE 5 SOUTH	48" x 18" 25" x 24" 26" x 12"	2
5	M4-10(Lt)	DETOUR (Lt ARROW)	48" x 18"	2
6	SC3(CA)	DETOUR (UP ARROW)	48" x 18"	7
7	M4-10(Rt)	DETOUR (Rt ARROW)	48" x 18"	2
8	M4-8a	END DETOUR	24" x 18"	2
			TOTAL THIS SHEET	25

* PLACE SIGN SEVEN DAYS PRIOR TO RAMP CLOSURE.
USE SC6-4 FOR CLOSURES GREATER THAN 24 HOURS.

PCMS MESSAGES

PRE-CLOSURE: PLACE PCMS 12 HOURS PRIOR TO CLOSURE AND ACTIVATE

(A) FRAME 1: RAMP / WILL BE / CLOSED
FRAME 2: TODAY / (OR TONIGHT) / X PM - Y AM

DURING CLOSURE: MOVE PCMS Approx 1000' BEFORE RAMP AND ACTIVATE

(B) FRAME 1: RAMP TO / Hwy 96 / CLOSED
FRAME 2: FOLLOW / DETOUR

DURING CLOSURE: PLACE PCMS Approx 1000' BEFORE RAMP AND ACTIVATE

(C) FRAME 1: RAMP TO / SB 5 / CLOSED
FRAME 2: FOLLOW / DETOUR

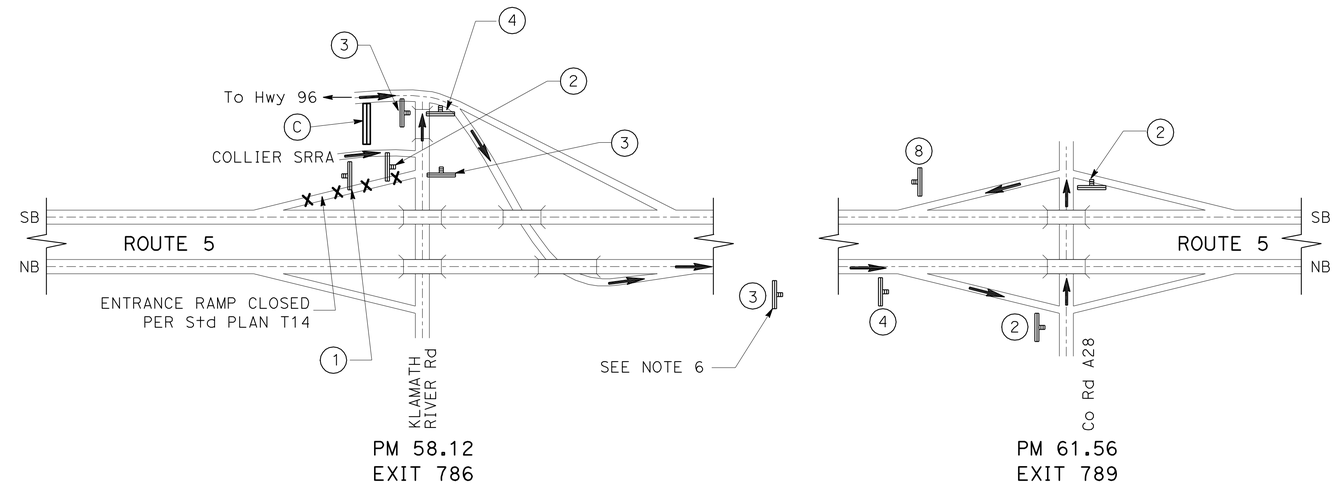

SB EXIT 786 CLOSURE DETOUR SIGNING

SB ON-RAMP AT KLAMATH RIVER ROAD UC

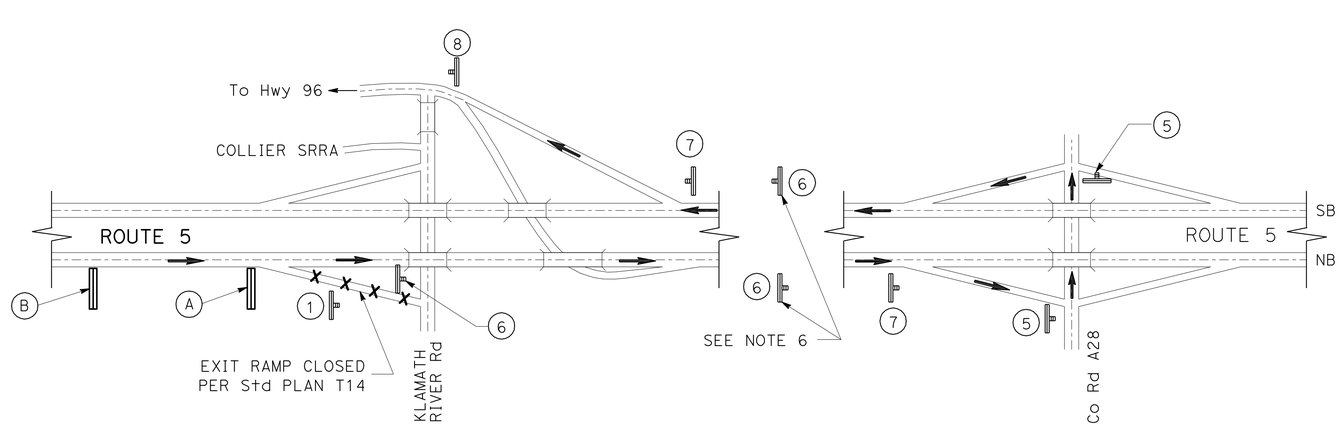

NB EXIT 786 CLOSURE DETOUR SIGNING

NB OFF-RAMP AT KLAMATH RIVER ROAD UC

THIS PLAN ACCURATE FOR DETOUR WORK ONLY

DETOUR PLAN

NO SCALE

DE-2

REVISED BY	DATE REVISED	CALCULATED-DESIGNED BY	CHECKED BY	FUNCTIONAL SUPERVISOR
R WEBER	06-02-11	RUSSELL FLOOD	ROBERT WEBER	STEVE TOPAL

STATE OF CALIFORNIA - DEPARTMENT OF TRANSPORTATION
Caltrans DESIGN

P:\proj1\02\3E760_plans\pse\23e760mg002.dgn

LAST REVISION 06-14-11 | DATE PLOTTED => 17-AUG-2011 | TIME PLOTTED => 11:02

Dist	COUNTY	ROUTE	POST MILES TOTAL PROJECT	SHEET No.	TOTAL SHEETS
02	Sis	5	R50.9/R58.2	221	329

Robert Weber 06-14-11
REGISTERED CIVIL ENGINEER DATE

06-15-11
PLANS APPROVAL DATE

REGISTERED PROFESSIONAL ENGINEER ROBERT WEBER No. C62511 Exp. 9-30-11 CIVIL STATE OF CALIFORNIA

THE STATE OF CALIFORNIA OR ITS OFFICERS OR AGENTS SHALL NOT BE RESPONSIBLE FOR THE ACCURACY OR COMPLETENESS OF SCANNED COPIES OF THIS PLAN SHEET.

NOTES:

1. SIGNS SHOWN WITH (CA) INDICATE CALIFORNIA SIGN CODES, OTHERWISE FEDERAL SIGN CODES ARE SHOWN.
2. EXACT SIGN AND PCMS LOCATIONS TO BE DETERMINED BY THE ENGINEER.
3. SEE STANDARD PLAN T-10A FOR ADDITIONAL REQUIREMENTS.
4. OVERSIZE VEHICLES MAY STAGE OFF THE FREEWAY AT EXIT 776 DURING INCIDENT CLOSURE.
5. PLACE SIGNS BETWEEN INTERCHANGES EVERY 2 MILES.

DURING CLOSURE: PLACE PCMS AND ACTIVATE

(A) TO ROUTE 5
10 MILES

FRAME 1

TRAFFIC DETOUR PLAN

NB Rte 5 CLOSED AT Rte 3:
TAKE NORTH YREKA / Rte 3 OFF-RAMP
TURN LEFT ON Rte 3
TURN RIGHT ON Rte 263
TURN RIGHT ON Rte 96
PROCEED NORTH ON NB ON-RAMP TO Rte 5

CONSTRUCTION AREA SIGNS (STATIONARY MOUNTED)

SIGN TYPE ○	SIGN CODE	MESSAGE	PANEL SIZE	No. OF SIGNS
1	M4-10(L+) G27-2(5)(CA) M3-1(CA)	DETOUR (L+ ARROW) ROUTE 5 NORTH	48" x 18" 25" x 24" 26" x 12"	1
2	SC3(CA) G27-2(5)(CA) M3-1(CA)	DETOUR (UP ARROW) ROUTE 5 NORTH	48" x 18" 25" x 24" 26" x 12"	4
3	M4-10(R+) G27-2(5)(CA) M3-1(CA)	DETOUR (R+ ARROW) ROUTE 5 NORTH	48" x 18" 25" x 24" 26" x 12"	2
4	M4-8a	END DETOUR	24" x 18"	1
			TOTAL (THIS SHEET)	8

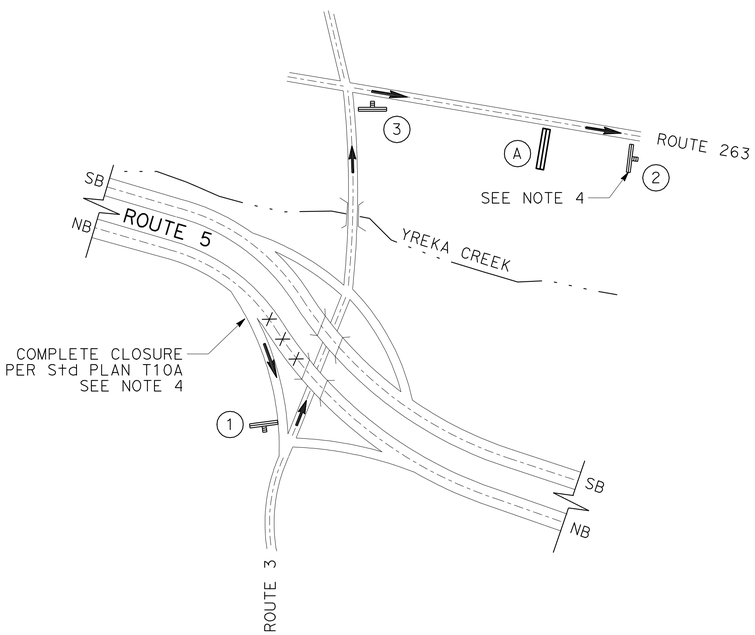

PM 48.23
EXIT 776

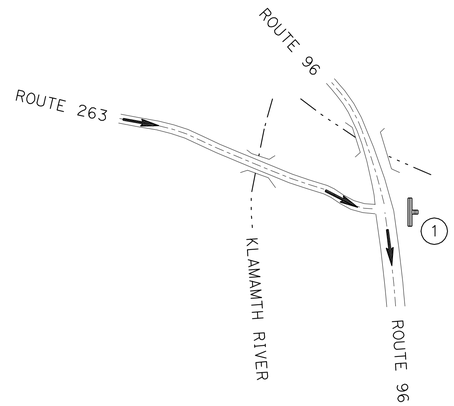

ROUTE 263/ROUTE 96
INTERCHANGE

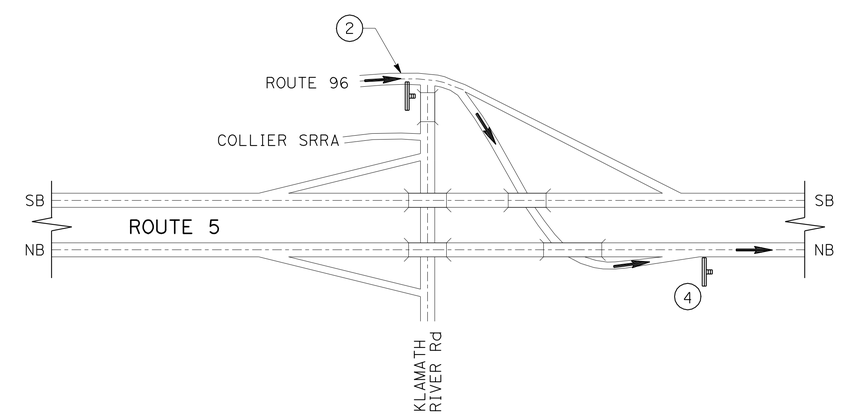

PM 58.12
EXIT 786

ROUTE 5 INCIDENT CLOSURE DETOUR SIGNING

NORTHBOUND ROUTE 5 FROM EXIT 776 TO EXIT 786

DETOUR PLAN
NO SCALE
DE-3

STATE OF CALIFORNIA - DEPARTMENT OF TRANSPORTATION
Caltrans® DESIGN

FUNCTIONAL SUPERVISOR: STEVE TOPAL
CALCULATED-DESIGNED BY: RUSSELL FLOOD
CHECKED BY: ROBERT WEBER
REVISED BY: R. WEBER
DATE REVISED: 06-04-11

P:\proj\02\3E760_plans\pse\23e760mg003.dgn

LAST REVISION 06-14-11
DATE PLOTTED => 17-AUG-2011
TIME PLOTTED => 11:02

Dist	COUNTY	ROUTE	POST MILES TOTAL PROJECT	SHEET No.	TOTAL SHEETS
02	Sis	5	R50.9/R58.2	222	329

Robert Weber 06-14-11
REGISTERED CIVIL ENGINEER DATE

06-15-11
PLANS APPROVAL DATE

REGISTERED PROFESSIONAL ENGINEER
ROBERT WEBER
No. C62511
Exp. 9-30-11
CIVIL
STATE OF CALIFORNIA

THE STATE OF CALIFORNIA OR ITS OFFICERS OR AGENTS SHALL NOT BE RESPONSIBLE FOR THE ACCURACY OR COMPLETENESS OF SCANNED COPIES OF THIS PLAN SHEET.

NOTES:

1. SIGNS SHOWN WITH (CA) INDICATE CALIFORNIA SIGN CODES, OTHERWISE FEDERAL SIGN CODES ARE SHOWN.
2. EXACT SIGN AND PCMS LOCATIONS TO BE DETERMINED BY THE ENGINEER.
3. SEE STANDARD PLAN T-10A FOR ADDITIONAL REQUIREMENTS.
4. OVERSIZE VEHICLES MAY STAGE OFF THE FREEWAY AT EXIT 789 DURING INCIDENT CLOSURE.
5. PLACE SIGNS BETWEEN INTERCHANGES EVERY 2 MILES.

DURING CLOSURE: PLACE PCMS AND ACTIVATE

(A) TO ROUTE 5
10 MILES

FRAME 1

CONSTRUCTION AREA SIGNS (STATIONARY MOUNTED)

SIGN TYPE ◯	SIGN CODE	MESSAGE	PANEL SIZE	No. OF SIGNS
1	M4-10(Lt) G27-2(5)(CA) M3-3(CA)	DETOUR (Lt ARROW) ROUTE 5 SOUTH	48" x 18" 25" x 24" 26" x 12"	2
2	SC3(CA) G27-2(5)(CA) M3-3(CA)	DETOUR (UP ARROW) ROUTE 5 SOUTH	48" x 18" 25" x 24" 26" x 12"	4
3	M4-10(Rt) G27-2(5)(CA) M3-3(CA)	DETOUR (Rt ARROW) ROUTE 5 SOUTH	48" x 18" 25" x 24" 26" x 12"	1
4	M4-8a	END DETOUR	24" x 18"	1
			TOTAL THIS SHEET	8

TRAFFIC DETOUR PLAN

SB Rte 5 AT CLOSED AT Rte 96:
TAKE Rte 96 OFF-RAMP
PROCEED ON Rte 96 TO Rte 263
TURN LEFT ON Rte 263
PROCEED ON Rte 263 TO Rte 3
TURN LEFT ON Rte 3
TURN RIGHT ON SB ON-RAMP TO Rte 5

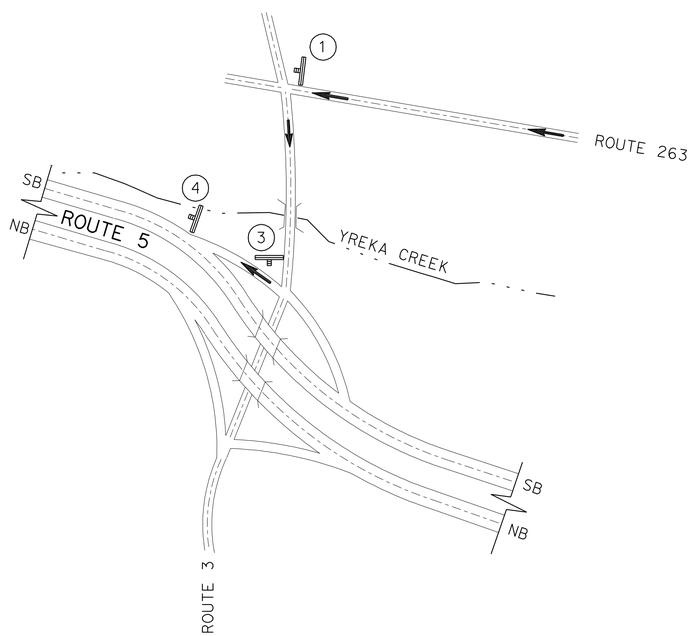

PM 48.23
EXIT 776

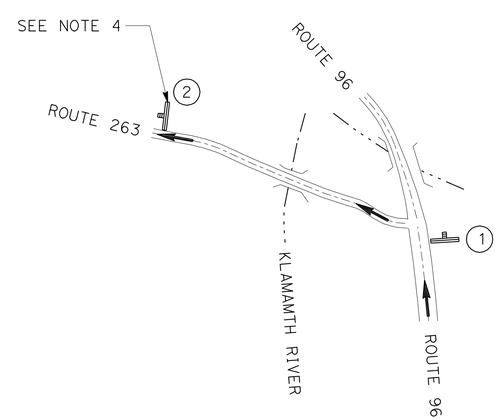

ROUTE 263/ROUTE 96
INTERCHANGE

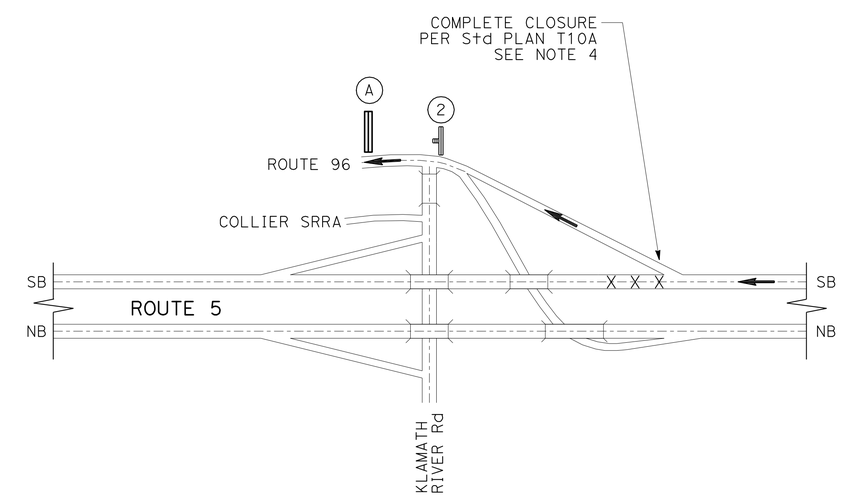

PM 58.12
EXIT 786

ROUTE 5 INCIDENT CLOSURE DETOUR SIGNING

SOUTHBOUND ROUTE 5 FROM EXIT 786 TO EXIT 776

DETOUR PLAN
NO SCALE
DE-4

REVISED BY	DATE REVISED
R. WEBER	06-04-11

CALCULATED-DESIGNED BY: RUSSELL FLOOD
CHECKED BY: ROBERT WEBER
FUNCTIONAL SUPERVISOR: STEVE TOPAL

STATE OF CALIFORNIA - DEPARTMENT OF TRANSPORTATION
Caltrans
DESIGN

P:\proj\02\3E760_plans\pse\23e760mg004.dgn

LAST REVISION 06-14-11
DATE PLOTTED => 17-AUG-2011
TIME PLOTTED => 11:02