Dist	COUNTY	ROUTE	POST MILES TOTAL PROJECT	SHEET No.	TOTAL SHEETS
02	Sis	5	R50.9/R58.2	2	329

REGISTERED CIVIL ENGINEER 06-14-11 DATE

06-15-11
PLANS APPROVAL DATE

REGISTERED PROFESSIONAL ENGINEER TOBY J. CRAWFORD No. C71138 Exp. 6-30-13 CIVIL STATE OF CALIFORNIA

THE STATE OF CALIFORNIA OR ITS OFFICERS OR AGENTS SHALL NOT BE RESPONSIBLE FOR THE ACCURACY OR COMPLETENESS OF SCANNED COPIES OF THIS PLAN SHEET.

NOTES:

1. DIMENSIONS OF THE PAVEMENT STRUCTURES (STRUCTURAL SECTIONS) ARE SUBJECT TO TOLERANCES SPECIFIED IN THE STANDARD SPECIFICATIONS.
2. SUPERELEVATIONS ARE SHOWN ON THE SUPERELEVATION DIAGRAMS.
3. EXISTING EDGE DRAINS TO BE REMOVED AND PAID FOR AS ROADWAY EXCAVATION.
4. REFER TO LAYOUTS, QUANTITIES, AND SPECIAL PROVISIONS FOR LIMITS OF CRCP WITH GLASS FIBER REINFORCED POLYMER BARS IN LIEU OF EPOXY-COATED STEEL.
5. RUMBLE STRIP (PCC, GROUND-IN OR HMA, GROUND-IN AS APPLICABLE) TO BE PLACED ON INSIDE AND OUTSIDE SHOULDERS THROUGHOUT PROJECT LIMITS. REFER TO STANDARD PLAN A40B AND CONSTRUCTION DETAILS.
6. REFER TO LAYOUTS AND QUANTITY SHEETS FOR METAL BEAM GUARD RAILING LOCATIONS.
7. CONSTRUCT LONGITUDINAL ISOLATION JOINT BETWEEN JPCP AND CRCP.
8. REFER TO LAYOUTS, DRAINAGE PLANS, STAGE CONSTRUCTION DETAILS, AND QUANTITY SHEETS FOR LOCATIONS OF CONCRETE BARRIER REPLACEMENT.
9. PLACE BOND BREAKER AT THE INTERFACE OF THE CONCRETE BARRIER AND JPCP.
10. JOINTED PLANE CONCRETE PAVEMENT IN THE MEDIAN SHOULDER IS UNDOWELED; REFER TO CONSTRUCTION DETAILS FOR ADDITIONAL INFORMATION.

SHEET NOTES:

[a] Exist INSIDE SHOULDER
Var 0.25' TO 0.70' AC
0.47' AB
Var 0.30' TO 0.80' AS

[b] Exist TRAVELED WAY *
0.67' PCC PAVEMENT
0.35' CTB
0.50' AS

[c] Exist OUTSIDE SHOULDER
Var 0.50' TO 0.67' AC
Var 0.35' TO 0.52' AB
0.50' AS

[d] Exist MEDIAN PAVEMENT
0.67' AC

ABBREVIATIONS:

CRCP-F	CONTINUOUSLY REINFORCED CONCRETE PAVEMENT (GLASS FIBER REINFORCED POLYMER)
CPACP	COLD PLANE ASPHALT CONCRETE PAVEMENT
Super	SUPERELEVATION
RACS	REPLACE ASPHALT CONCRETE SURFACING

* APPROXIMATELY 5% OF EXISTING SLABS ARE FULL DEPTH (1' TO 1.5') PCC OR AC.

1 REVISED PER ADDENDUM No. 1 DATED NOVEMBER 2, 2011

1 DESIGN DESIGNATION:

ADT (2012)	15,700	D	53%
ADT (2052)	27,000	T	29%
DHV	3900	V	65 mph
ESAL	82,490,000	TI_{40}	15

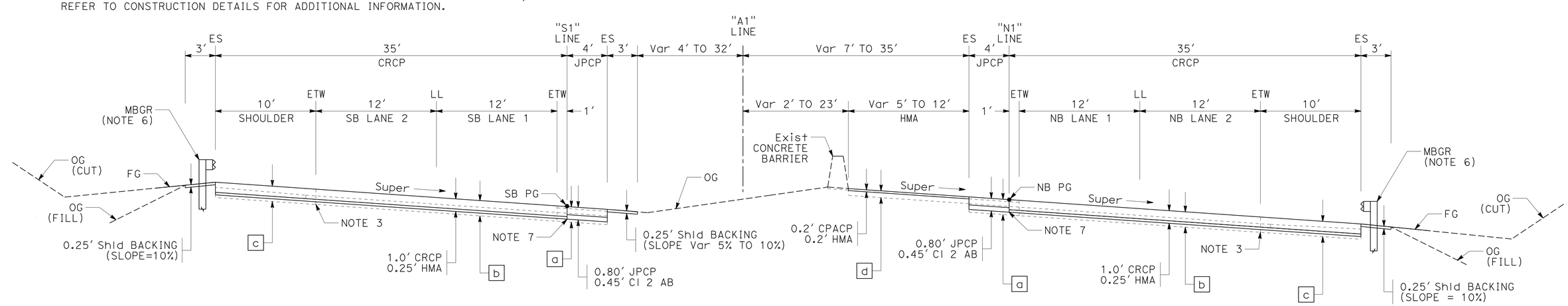

"A1" 536+35 TO "A1" 563+35

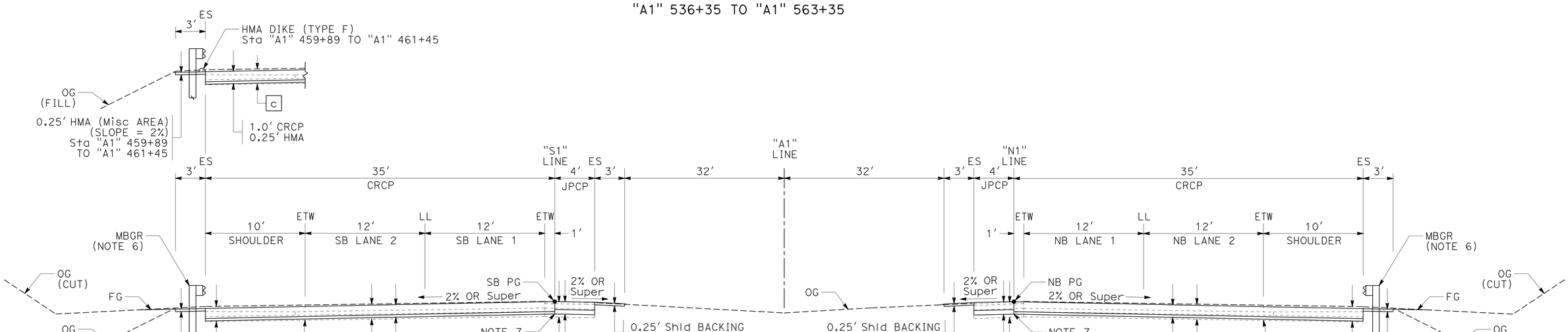

"A1" 459+82 TO "A1" 536+35

TYPICAL CROSS SECTIONS

NO SCALE

X-1

ROUTE 5

STATE OF CALIFORNIA - DEPARTMENT OF TRANSPORTATION
DESIGN
Caltrans
FUNCTIONAL SUPERVISOR: STEVE TOPAL
CALCULATED-DESIGNED BY: TOBY CRAWFORD
CHECKED BY: BYRON STANLEY
REVISED BY
DATE REVISED
P:\proj1\02\3E760_plans\pse\addenda_1\23e760ca001.dgn

LAST REVISION 06-14-11
DATE PLOTTED => 01-NOV-2011
TIME PLOTTED => 14:20

Dist	COUNTY	ROUTE	POST MILES TOTAL PROJECT	SHEET No.	TOTAL SHEETS
02	Sis	5	R50.9/R58.2	11	329

REGISTERED CIVIL ENGINEER 06-14-11 DATE

06-15-11
PLANS APPROVAL DATE

REGISTERED PROFESSIONAL ENGINEER TOBY J. CRAWFORD No. C71138 Exp. 6-30-13 CIVIL STATE OF CALIFORNIA

THE STATE OF CALIFORNIA OR ITS OFFICERS OR AGENTS SHALL NOT BE RESPONSIBLE FOR THE ACCURACY OR COMPLETENESS OF SCANNED COPIES OF THIS PLAN SHEET.

NOTE:

1. FOR ACCURATE RIGHT OF WAY DATA, CONTACT RIGHT OF WAY ENGINEERING AT THE DISTRICT OFFICE.

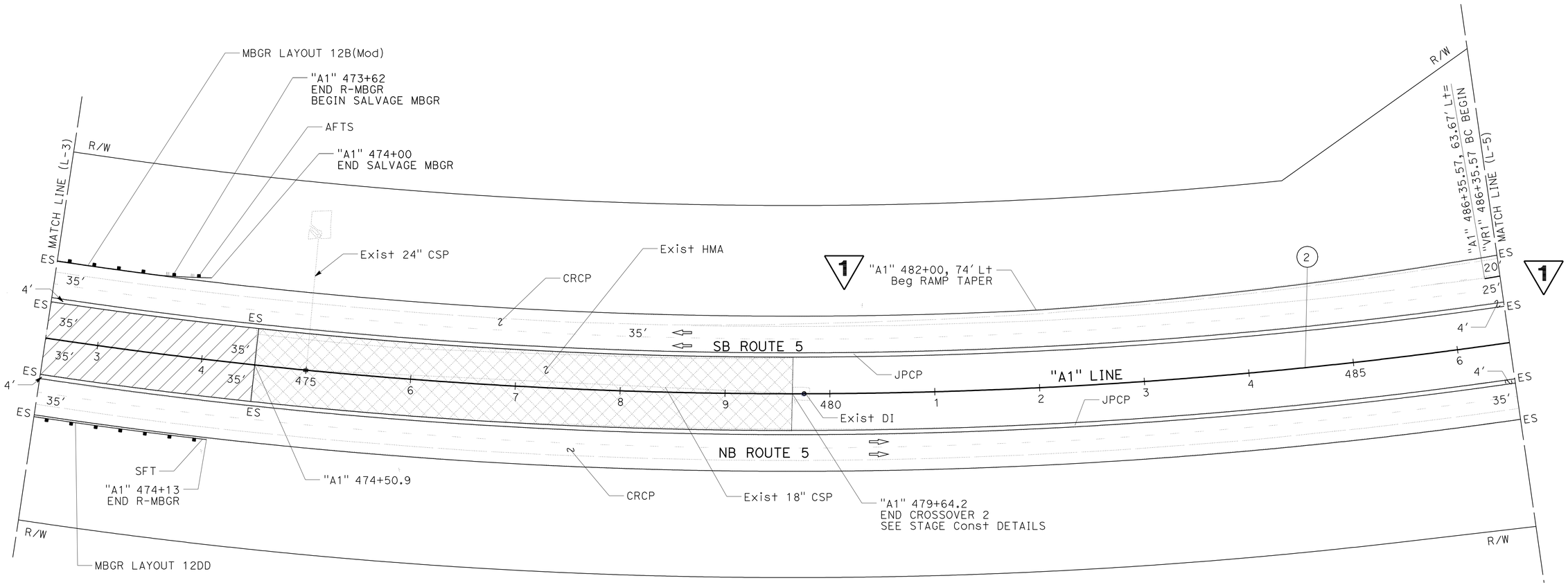

CURVE DATA

No. (#)	R	Δ	T	L
2	4800.03'	39°12'00"	1709.21'	3284.03'

1 REVISED PER ADDENDUM No. 1 DATED NOVEMBER 2, 2011

LAYOUT
SCALE: 1" = 50'

L-4

REVISED BY	DATE REVISED
WILL LESLIE	TOBY CRAWFORD

CALCULATED-DESIGNED BY / CHECKED BY

FUNCTIONAL SUPERVISOR: STEVE TOPAL

STATE OF CALIFORNIA - DEPARTMENT OF TRANSPORTATION
Caltrans® DESIGN

P:\proj1\02\3E760_plans\pse\addenda_1\23e760ea004.dgn

LAST REVISION 06-14-11 | DATE PLOTTED => 01-NOV-2011 | TIME PLOTTED => 14:20

Dist	COUNTY	ROUTE	POST MILES TOTAL PROJECT	SHEET No.	TOTAL SHEETS
02	Sis	5	R50.9/R58.2	12	329

REGISTERED CIVIL ENGINEER 06-14-11 DATE

06-15-11
PLANS APPROVAL DATE

REGISTERED PROFESSIONAL ENGINEER TOBY J. CRAWFORD No. C71138 Exp. 6-30-13 CIVIL STATE OF CALIFORNIA

THE STATE OF CALIFORNIA OR ITS OFFICERS OR AGENTS SHALL NOT BE RESPONSIBLE FOR THE ACCURACY OR COMPLETENESS OF SCANNED COPIES OF THIS PLAN SHEET.

NOTE:

1. FOR ACCURATE RIGHT OF WAY DATA, CONTACT RIGHT OF WAY ENGINEERING AT THE DISTRICT OFFICE.
2. SEE CONSTRUCTION DETAILS FOR RAMP CONFORM SPECIFICS

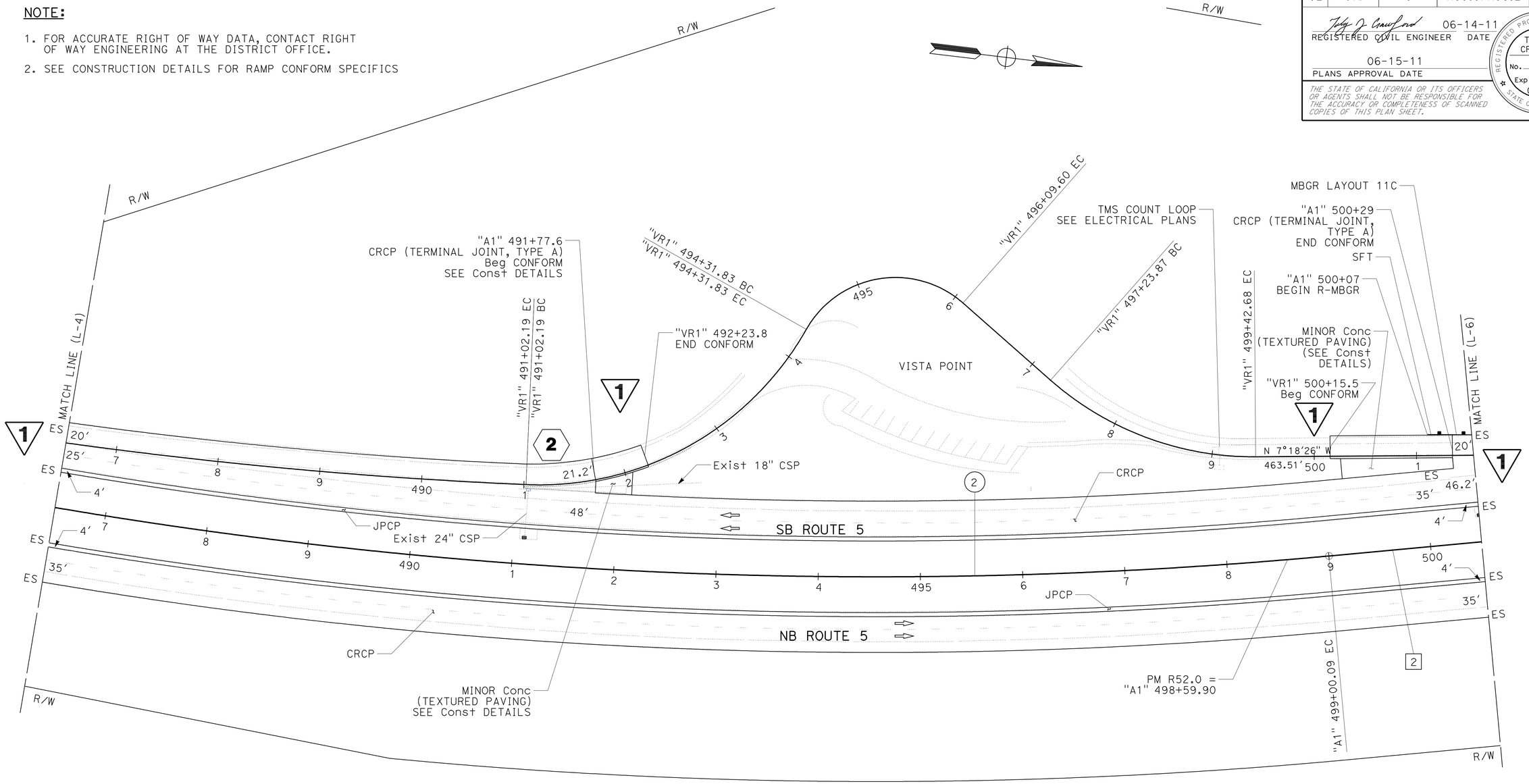

CURVE DATA

No. ⊛	R	Δ	T	L
2	4800.03'	39°12'00"	1709.21'	3284.03'

TANGENT DATA

No. #	BEARING	DISTANCE
2	N 12°10'55" W	2687.50'

1 REVISED PER ADDENDUM No. 1 DATED NOVEMBER 2, 2011

LAYOUT
SCALE: 1" = 50'

L-5

REVISED BY | DATE REVISED
WILL LESLIE | TOBY CRAWFORD
CALCULATED-DESIGNED BY | CHECKED BY
FUNCTIONAL SUPERVISOR
STEVE TOPAL

STATE OF CALIFORNIA - DEPARTMENT OF TRANSPORTATION
Caltrans
DESIGN

P:\proj1\02\3E760_plans\pse\addenda_1\23e760ea005.dgn

LAST REVISION 06-14-11 | DATE PLOTTED => 01-NOV-2011 | TIME PLOTTED => 14:20

Dist	COUNTY	ROUTE	POST MILES TOTAL PROJECT	SHEET No.	TOTAL SHEETS
02	Sis	5	R50.9/R58.2	13	329

REGISTERED CIVIL ENGINEER 06-14-11 DATE

06-15-11
PLANS APPROVAL DATE

REGISTERED PROFESSIONAL ENGINEER
TOBY J. CRAWFORD
No. C71138
Exp. 6-30-13
CIVIL
STATE OF CALIFORNIA

THE STATE OF CALIFORNIA OR ITS OFFICERS OR AGENTS SHALL NOT BE RESPONSIBLE FOR THE ACCURACY OR COMPLETENESS OF SCANNED COPIES OF THIS PLAN SHEET.

NOTE:

1. FOR ACCURATE RIGHT OF WAY DATA, CONTACT RIGHT OF WAY ENGINEERING AT THE DISTRICT OFFICE.

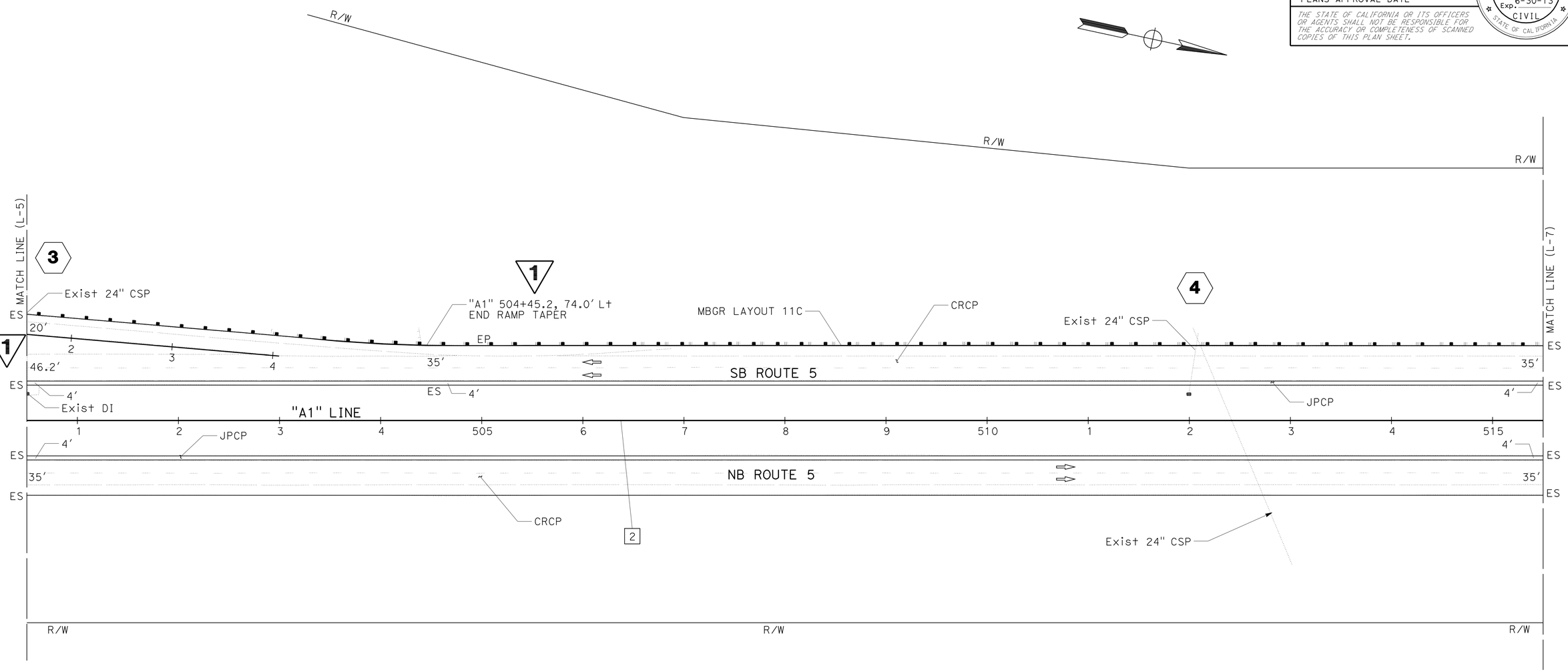

TANGENT DATA

No. #	BEARING	DISTANCE
2	N 12°10'55" W	2687.50'

1 REVISED PER ADDENDUM No. 1 DATED NOVEMBER 2, 2011

LAYOUT

SCALE: 1" = 50'

L-6

WILL LESLIE — REVISED BY
TOBY CRAWFORD — DATE REVISED
CALCULATED-DESIGNED BY
CHECKED BY
FUNCTIONAL SUPERVISOR
STEVE TOPAL

STATE OF CALIFORNIA - DEPARTMENT OF TRANSPORTATION
Caltrans
DESIGN

P:\proj1\02\3E760_plans\pse\addenda_1\23e760ea006.dgn

LAST REVISION 06-14-11
DATE PLOTTED => 01-NOV-2011
TIME PLOTTED => 14:20

Dist	COUNTY	ROUTE	POST MILES TOTAL PROJECT	SHEET No.	TOTAL SHEETS
02	Sis	5	R50.9/R58.2	34	329

REGISTERED CIVIL ENGINEER 06-14-11 DATE

06-15-11
PLANS APPROVAL DATE

REGISTERED PROFESSIONAL ENGINEER TOBY J. CRAWFORD No. C71138 Exp. 6-30-13 CIVIL STATE OF CALIFORNIA

THE STATE OF CALIFORNIA OR ITS OFFICERS OR AGENTS SHALL NOT BE RESPONSIBLE FOR THE ACCURACY OR COMPLETENESS OF SCANNED COPIES OF THIS PLAN SHEET.

NOTES:

1. FOR ACCURATE RIGHT OF WAY DATA, CONTACT RIGHT OF WAY ENGINEERING AT THE DISTRICT OFFICE.
2. SEE EXISTING UTILITIES PLANS FOR POTENTIAL UTILITY CONFLICTS.
3. SEE ELECTRICAL PLANS FOR TRAFFIC MANAGEMENT SYSTEM ELEMENTS.

TANGENT DATA

No. #	BEARING	DISTANCE
12	N 28°57′09″ W	1020.26′
13	N 30°5′54″ W	300.06′
14	N 33°17′23″ W	794.28′
16	N 24°4′40″ W	377.18

CURVE DATA

No. #	R	Δ	T	L
12	1750.01′	92°42′14″	1834.61′	2831.50′
15	2999.99′	3°11′29″	83.57′	167.10′

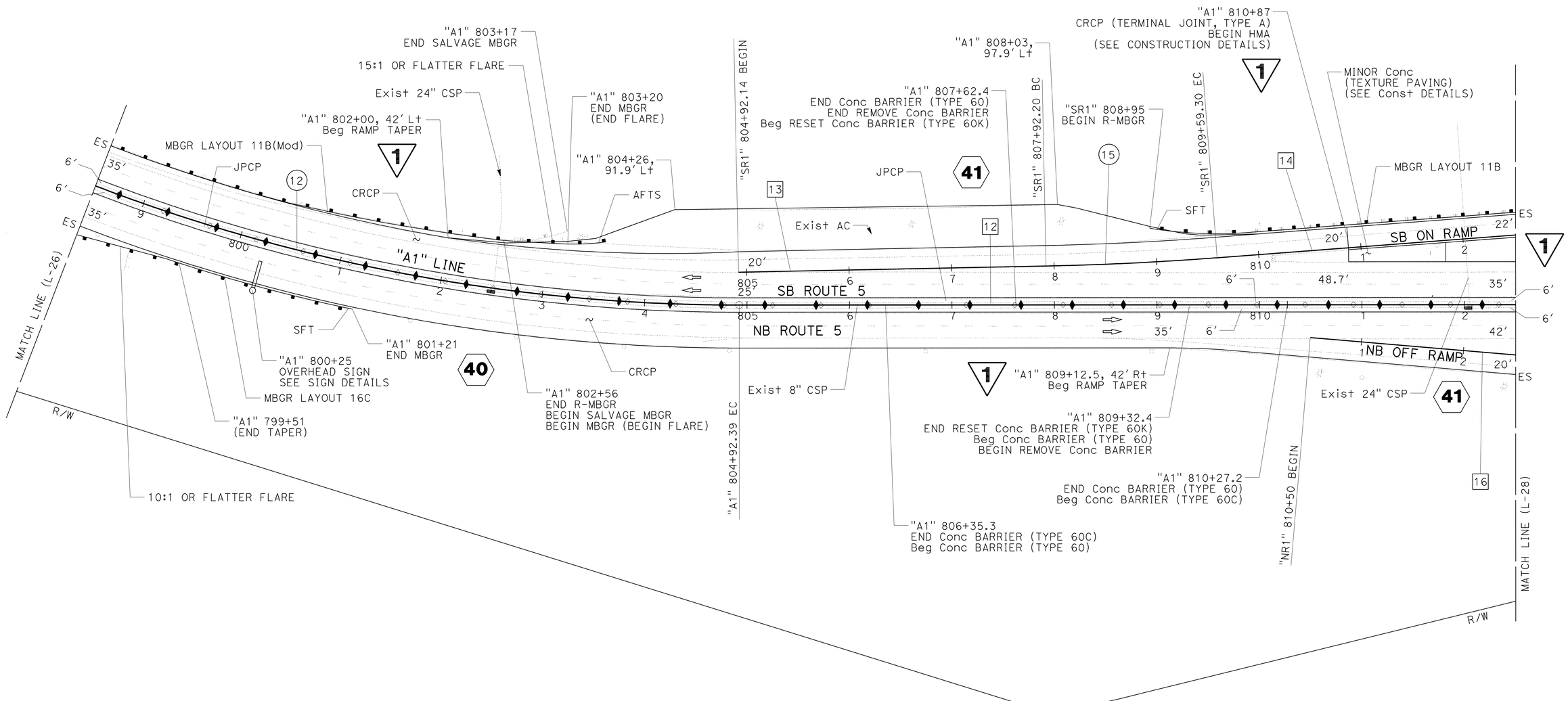

1 REVISED PER ADDENDUM No. 1 DATED NOVEMBER 2, 2011

LAYOUT

SCALE: 1" = 50′

L-27

REVISED BY	DATE REVISED
WILL LESLIE	TOBY CRAWFORD

CALCULATED-DESIGNED BY | CHECKED BY

FUNCTIONAL SUPERVISOR: STEVE TOPAL

STATE OF CALIFORNIA - DEPARTMENT OF TRANSPORTATION
Caltrans
DESIGN

P:\proj1\02\3E760_plans\pse\addenda_1\23e760ea027.dgn

LAST REVISION 06-14-11 | DATE PLOTTED => 01-NOV-2011 | TIME PLOTTED => 14:20

Dist	COUNTY	ROUTE	POST MILES TOTAL PROJECT	SHEET No.	TOTAL SHEETS
02	Sis	5	R50.9/R58.2	35	329

REGISTERED CIVIL ENGINEER 06-14-11 DATE

06-15-11
PLANS APPROVAL DATE

REGISTERED PROFESSIONAL ENGINEER TOBY J. CRAWFORD No. C71138 Exp. 6-30-13 CIVIL STATE OF CALIFORNIA

THE STATE OF CALIFORNIA OR ITS OFFICERS OR AGENTS SHALL NOT BE RESPONSIBLE FOR THE ACCURACY OR COMPLETENESS OF SCANNED COPIES OF THIS PLAN SHEET.

NOTES:

1. FOR ACCURATE RIGHT OF WAY DATA, CONTACT RIGHT OF WAY ENGINEERING AT THE DISTRICT OFFICE.
2. SEE EXISTING UTILITIES PLANS FOR POTENTIAL UTILITY CONFLICTS.
3. SEE CONSTRUCTION DETAILS FOR RELATION OF JPCP TERMINALS AND CRPC TERMINALS.
4. SEE ELECTRICAL PLANS FOR TRAFFIC MANAGEMENT SYSTEM ELEMENTS.
5. SEE CONSTRUCTION DETAILS FOR REPAVING THE SAFETY ROADSIDE REST AREA.
6. SEE CONSTRUCTION DETAILS FOR METAL BEAM GUARD RAILING DETAILS AT STRUCTURES.

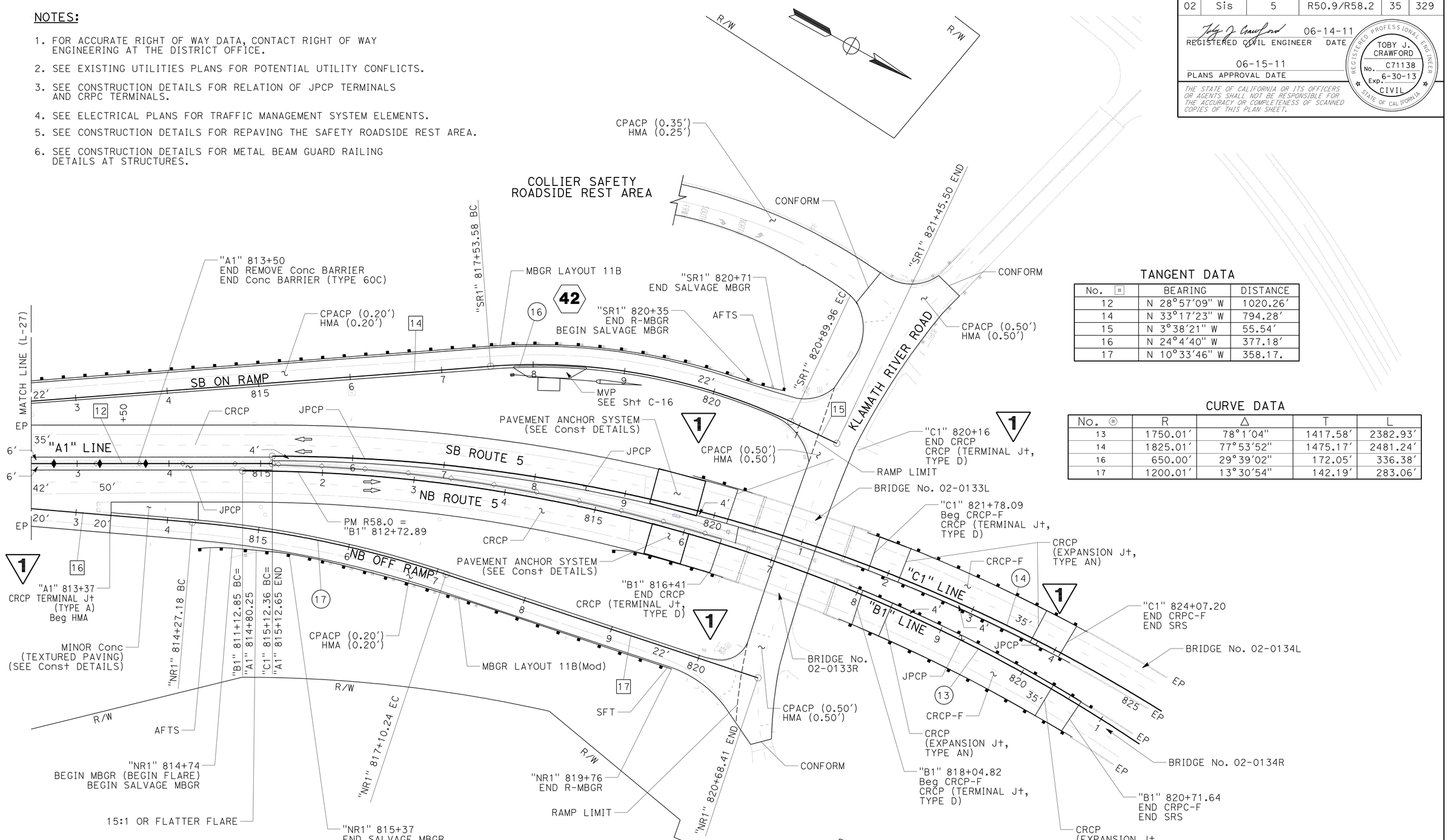

TANGENT DATA

No.	BEARING	DISTANCE
12	N 28°57'09" W	1020.26'
14	N 33°17'23" W	794.28'
15	N 3°38'21" W	55.54'
16	N 24°4'40" W	377.18'
17	N 10°33'46" W	358.17.

CURVE DATA

No.	R	Δ	T	L
13	1750.01'	78°1'04"	1417.58'	2382.93'
14	1825.01'	77°53'52"	1475.17'	2481.24'
16	650.00'	29°39'02"	172.05'	336.38'
17	1200.01'	13°30'54"	142.19'	283.06'

1 REVISED PER ADDENDUM No. 1 DATED NOVEMBER 2, 2011

LAYOUT

SCALE: 1" = 50'

L-28

STATE OF CALIFORNIA - DEPARTMENT OF TRANSPORTATION
Caltrans®
DESIGN

FUNCTIONAL SUPERVISOR: STEVE TOPAL
CALCULATED-DESIGNED BY: WILL LESLIE
CHECKED BY: TOBY CRAWFORD
REVISED BY / DATE REVISED

P:\proj\02\3E760_plans\pse\addenda_1\23e760ea028.dgn

LAST REVISION 06-14-11
DATE PLOTTED => 01-NOV-2011
TIME PLOTTED => 14:20

BORDER LAST REVISED 7/2/2010
USERNAME => s115152
DGN FILE => 23e760ea028.dgn
RELATIVE BORDER SCALE IS IN INCHES 0 1 2 3
UNIT 0319
PROJECT NUMBER & PHASE 02000201621

Dist	COUNTY	ROUTE	POST MILES TOTAL PROJECT	SHEET No.	TOTAL SHEETS
02	Sis	5	R50.9/R58.2	108	329

REGISTERED CIVIL ENGINEER 06-14-11 DATE

06-15-11
PLANS APPROVAL DATE

REGISTERED PROFESSIONAL ENGINEER TOBY J. CRAWFORD No. C71138 Exp. 6-30-13 CIVIL STATE OF CALIFORNIA

THE STATE OF CALIFORNIA OR ITS OFFICERS OR AGENTS SHALL NOT BE RESPONSIBLE FOR THE ACCURACY OR COMPLETENESS OF SCANNED COPIES OF THIS PLAN SHEET.

NOTES: 1

1. TRANSVERSE JPCP JOINTS SHALL BE CONSTRUCTED AT RIGHT ANGLES TO THE LONGITUDINAL PAVEMENT JOINTS IN NEW JOINTED PLAIN CONCRETE PAVEMENT AND SPACED AT SUCCESSIVE REPEATED INTERVALS OF 12′, 15′, 13′, 14′.
2. CONSTRUCT LONGITUDINAL CONTRACTION JOINTS WHEN MORE THAN ONE LANE OR SHOULDER WIDTHS ARE PLACED AT ONE TIME. IF CONSTRUCTING ONE LANE AT A TIME, USE LONGITUDINAL CONSTRUCTION JOINT.
3. JOINT SEALS AT LONGITUDINAL CONSTRUCTION JOINTS SHALL CONFORM TO THE DETAILS SHOWN ON REVISED STANDARD PLAN P20 FOR TYPE C JOINT.
4. JOINT SEALS AT LONGITUDINAL AND TRANSVERSE CONTRACTION JOINTS SHALL CONFORM TO THE DETAILS SHOWN ON REVISED STANDARD PLAN P20 FOR TYPE B JOINT.

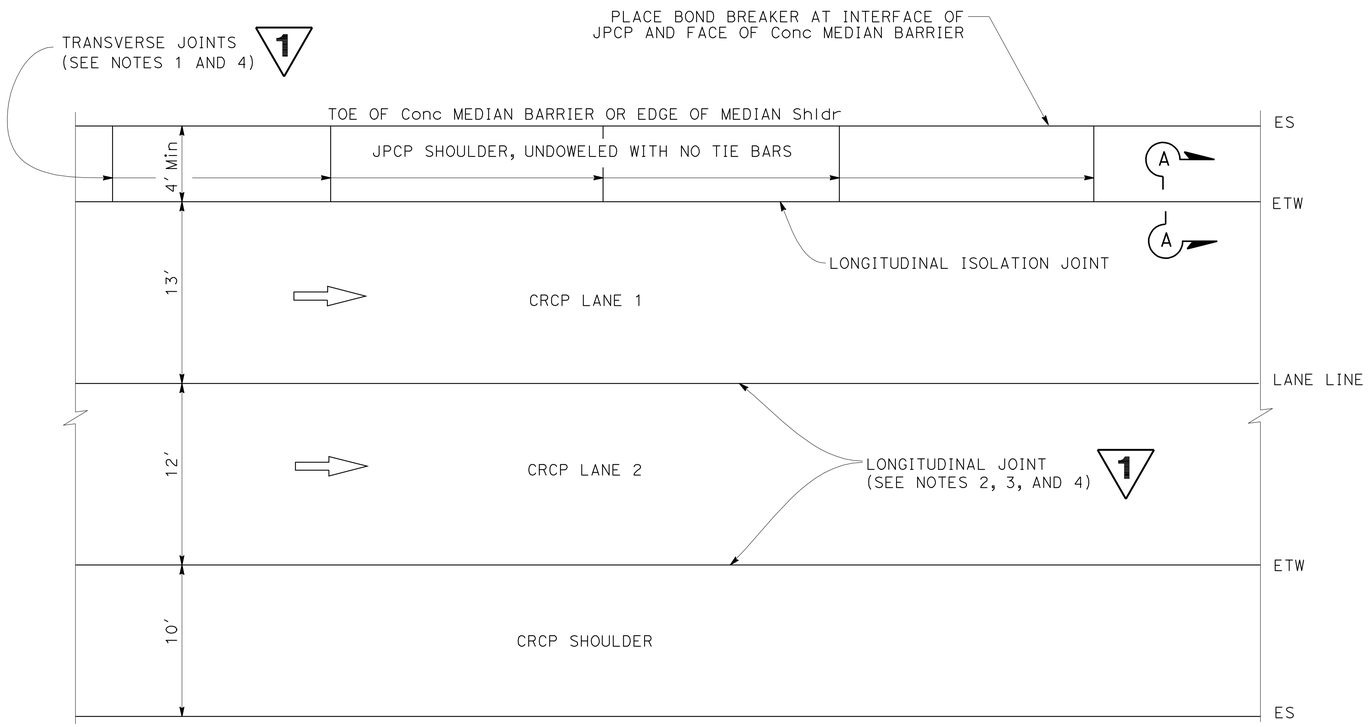

PLAN

PAVEMENT JOINTS

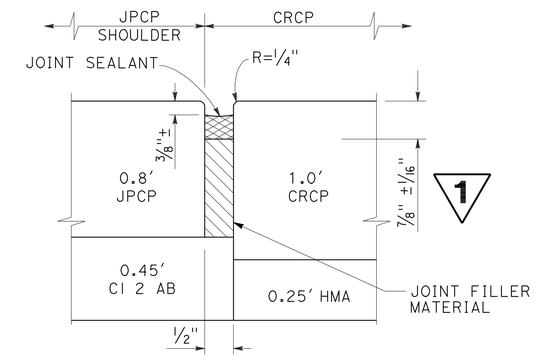

SECTION A-A

LONGITUDINAL ISOLATION JOINT

1 **REVISED PER ADDENDUM No. 1 DATED NOVEMBER 2, 2011**

CONSTRUCTION DETAILS

NO SCALE

C-3

REVISED BY	DATE REVISED
GINNY SEIBERT	TOBY CRAWFORD
CALCULATED-DESIGNED BY	CHECKED BY
FUNCTIONAL SUPERVISOR	STEVE TOPAL

STATE OF CALIFORNIA - DEPARTMENT OF TRANSPORTATION **DESIGN**

Caltrans

P:\proj1\02\3E760_plans\pse\addenda_1\23e760ga003.dgn

LAST REVISION 06-14-11 | DATE PLOTTED => 01-NOV-2011 | TIME PLOTTED => 14:20

Dist	COUNTY	ROUTE	POST MILES TOTAL PROJECT	SHEET No.	TOTAL SHEETS
02	Sis	5	R50.9/R58.2	114	329

REGISTERED CIVIL ENGINEER 06-14-11 DATE

06-15-11
PLANS APPROVAL DATE

REGISTERED PROFESSIONAL ENGINEER TOBY J. CRAWFORD No. C71138 Exp. 6-30-13 CIVIL STATE OF CALIFORNIA

THE STATE OF CALIFORNIA OR ITS OFFICERS OR AGENTS SHALL NOT BE RESPONSIBLE FOR THE ACCURACY OR COMPLETENESS OF SCANNED COPIES OF THIS PLAN SHEET.

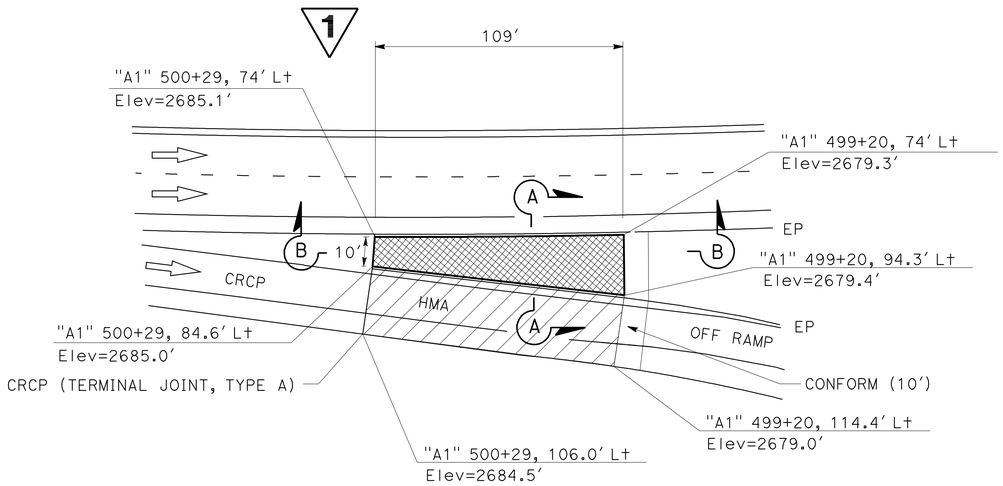

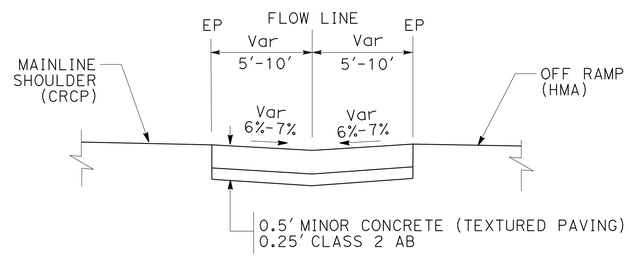

SECTION A-A

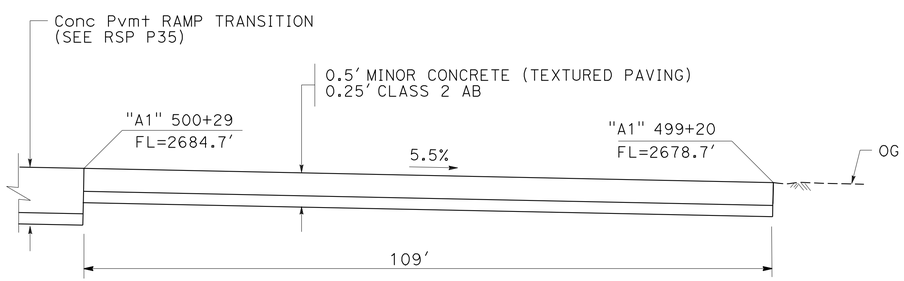

SECTION B-B

LEGEND:

MINOR CONCRETE (TEXTURED PAVING)

0.5′ CPACP
0.50′ HMA

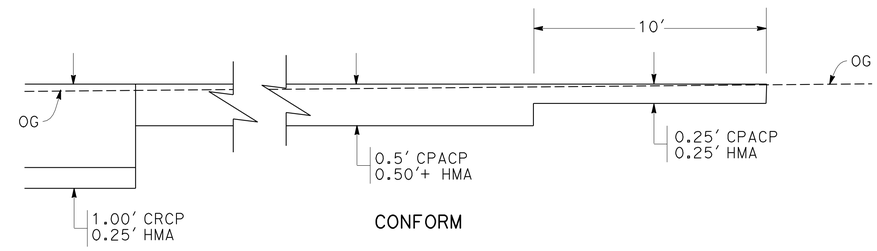

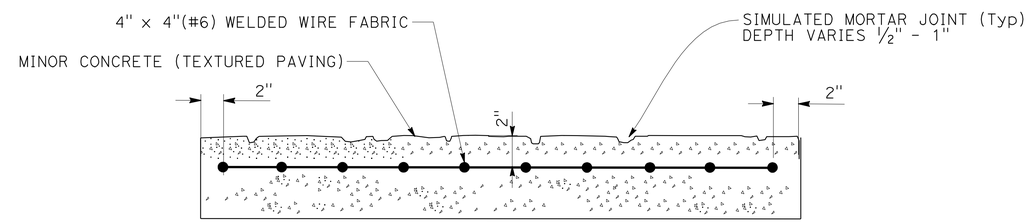

SECTION C-C

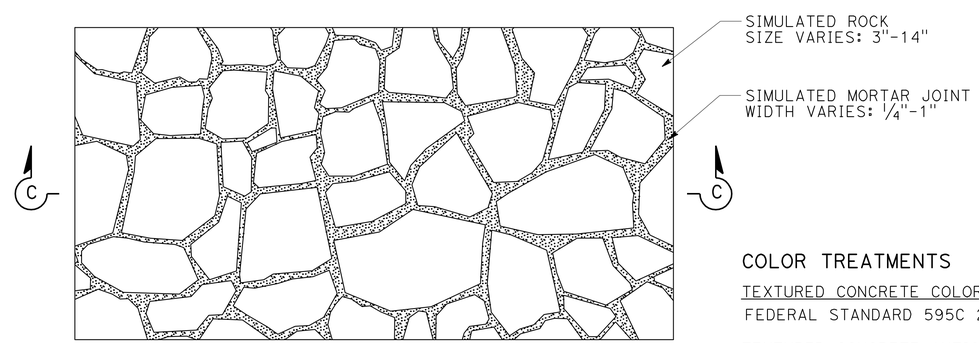

PLAN

COLOR TREATMENTS

TEXTURED CONCRETE COLOR HARDENER:
FEDERAL STANDARD 595C 26250

TEXTURED CONCRETE ANTIQUE RELEASE AGENT:
FEDERAL STANDARD 595C 30045

TEXTURED PAVING DETAIL

VISTA POINT SB OFF RAMP

1 REVISED PER ADDENDUM No. 1 DATED NOVEMBER 2, 2011

CONSTRUCTION DETAILS

NO SCALE

C-9

REVISED BY	DATE REVISED

CALCULATED-DESIGNED BY	CHECKED BY
ERIC COVINGTON	TOBY CRAWFORD

FUNCTIONAL SUPERVISOR: STEVE TOPAL

STATE OF CALIFORNIA - DEPARTMENT OF TRANSPORTATION
Caltrans
DESIGN

P:\proj1\02\3E760_plans\pse\addenda_1\23e760ga009.dgn

LAST REVISION 06-14-11 | DATE PLOTTED => 01-NOV-2011 | TIME PLOTTED => 14:21

Dist	COUNTY	ROUTE	POST MILES TOTAL PROJECT	SHEET No.	TOTAL SHEETS
02	Sis	5	R50.9/R58.2	115	329

REGISTERED CIVIL ENGINEER 06-14-11 DATE

PLANS APPROVAL DATE 06-15-11

REGISTERED PROFESSIONAL ENGINEER TOBY J. CRAWFORD No. C71138 Exp. 6-30-13 CIVIL STATE OF CALIFORNIA

THE STATE OF CALIFORNIA OR ITS OFFICERS OR AGENTS SHALL NOT BE RESPONSIBLE FOR THE ACCURACY OR COMPLETENESS OF SCANNED COPIES OF THIS PLAN SHEET.

NOTE:

1. FOR TEXTURED PAVING DETAIL, SEE SHEET C-9.

LEGEND:

MINOR CONCRETE (TEXTURED PAVING)

0.50′ CPACP
0.50′ HMA

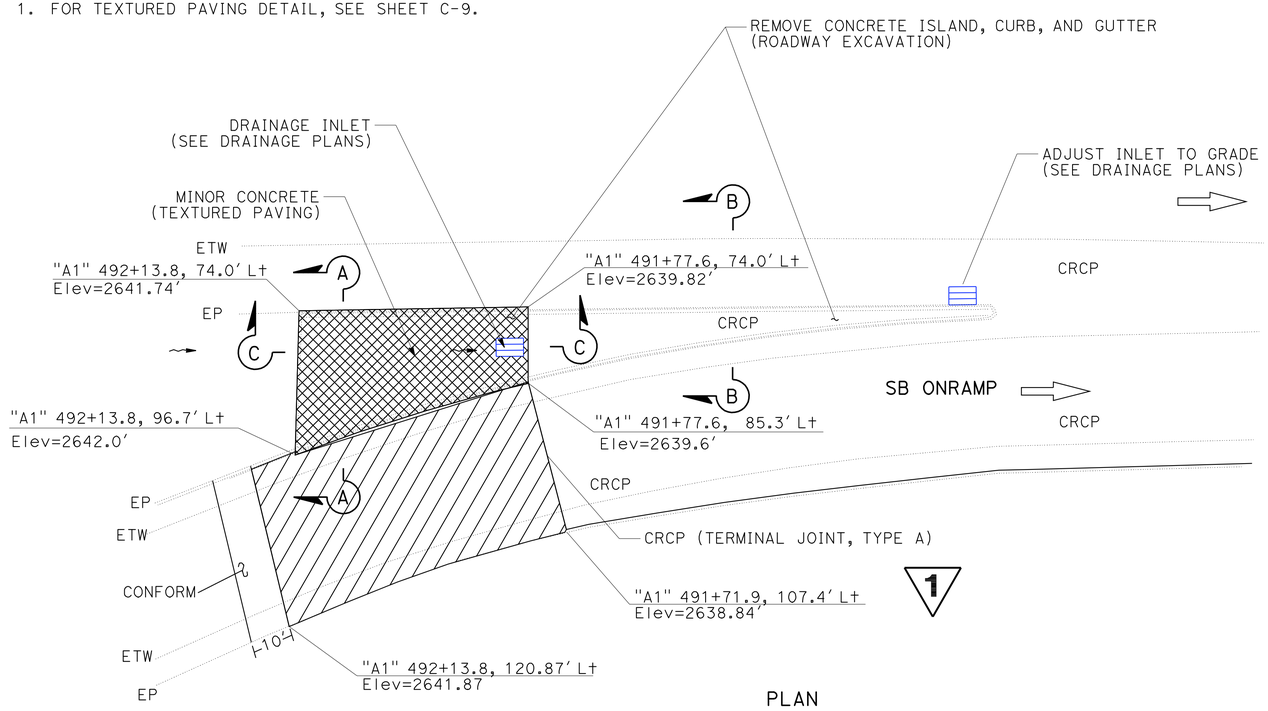

PLAN

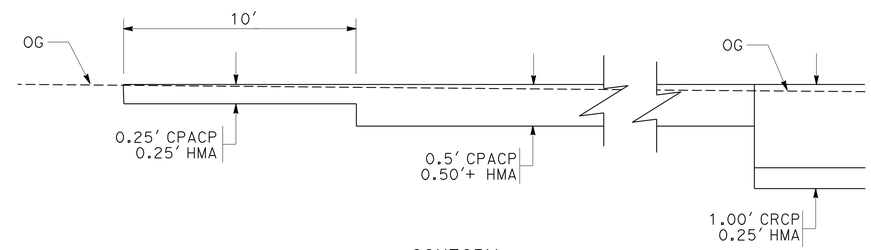

CONFORM

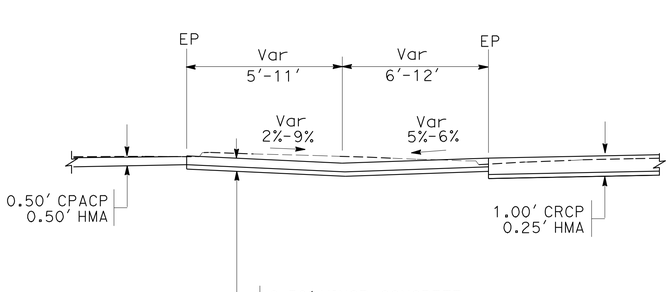

SECTION A-A
491+77.6 TO 492+13.8

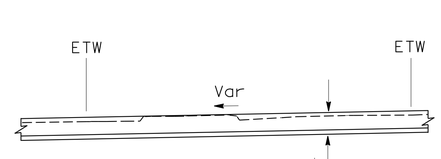

SECTION B-B

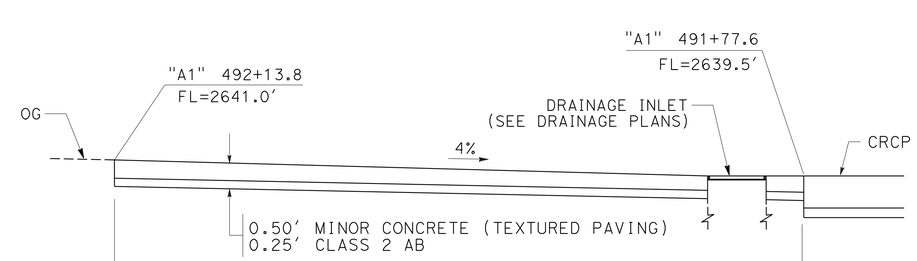

SECTION C-C

VISTA POINT SB ONRAMP

1 REVISED PER ADDENDUM No. 1 DATED NOVEMBER 2, 2011

CONSTRUCTION DETAILS
NO SCALE

C-10

STATE OF CALIFORNIA - DEPARTMENT OF TRANSPORTATION
Caltrans
DESIGN

FUNCTIONAL SUPERVISOR: STEVE TOPAL
CALCULATED-DESIGNED BY: ERIC COVINGTON
CHECKED BY: TOBY CRAWFORD
REVISED BY
DATE REVISED

P:\proj1\02\3E760_plans\pse\addenda_1\23e760ga010.dgn

LAST REVISION 06-14-11
DATE PLOTTED => 01-NOV-2011
TIME PLOTTED => 14:21

Dist	COUNTY	ROUTE	POST MILES TOTAL PROJECT	SHEET No.	TOTAL SHEETS
02	Sis	5	R50.9/R58.2	116	329

REGISTERED CIVIL ENGINEER 06-14-11 DATE

06-15-11
PLANS APPROVAL DATE

REGISTERED PROFESSIONAL ENGINEER TOBY J. CRAWFORD No. C71138 Exp. 6-30-13 CIVIL STATE OF CALIFORNIA

THE STATE OF CALIFORNIA OR ITS OFFICERS OR AGENTS SHALL NOT BE RESPONSIBLE FOR THE ACCURACY OR COMPLETENESS OF SCANNED COPIES OF THIS PLAN SHEET.

NOTE:

1. FOR TEXTURED PAVING DETAIL, SEE SHEET C-9.

LEGEND:

MINOR CONCRETE (TEXTURED PAVING)

0.50' CPCAP
0.50' HMA

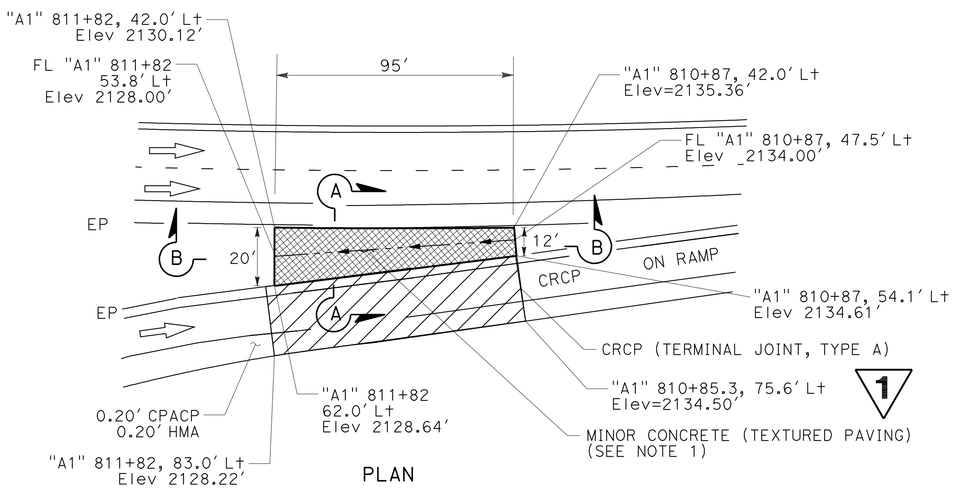

PLAN

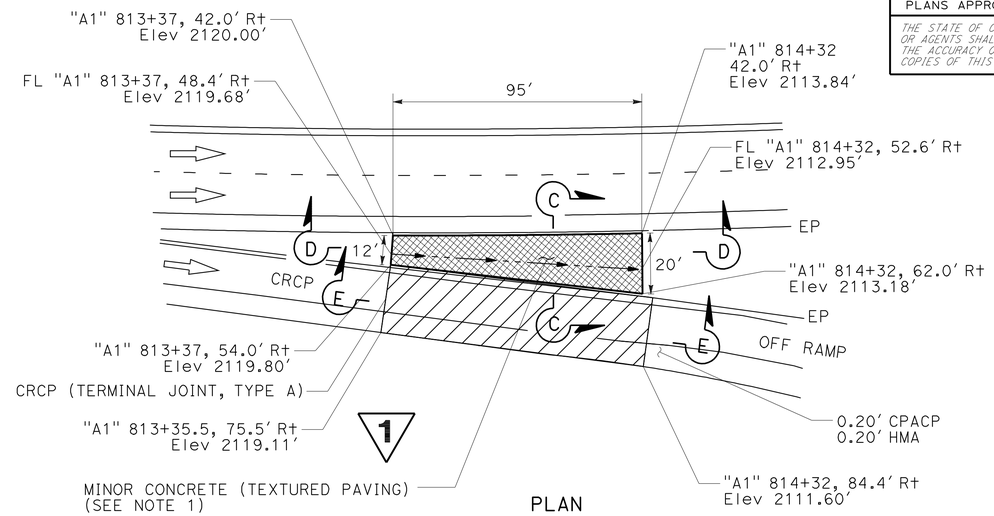

PLAN

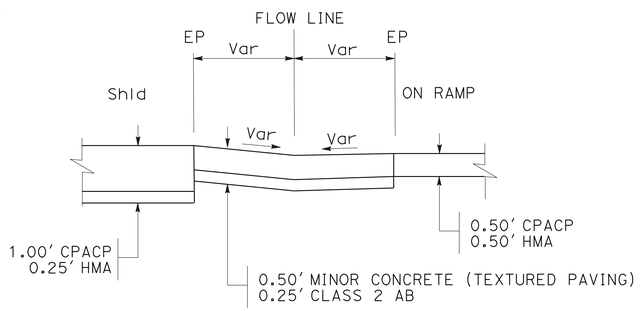

SECTION A-A

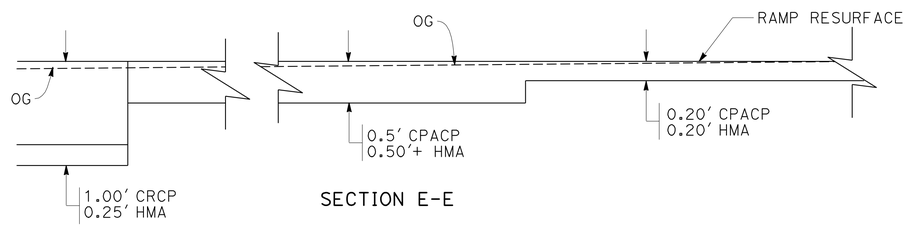

SECTION E-E

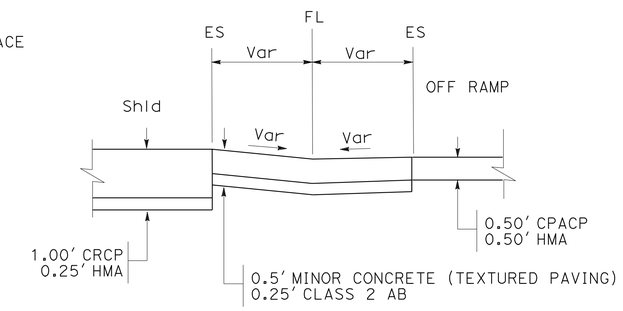

SECTION C-C

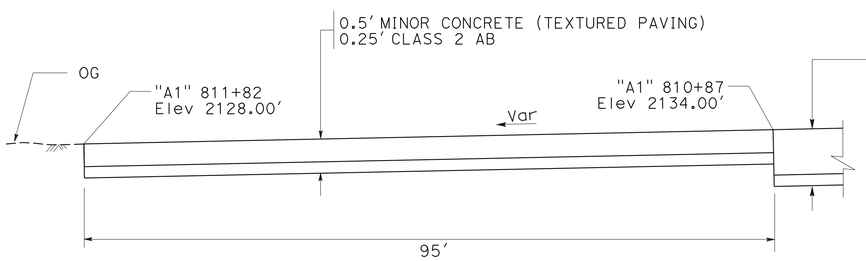

SECTION B-B

COLLIER SB ON RAMP

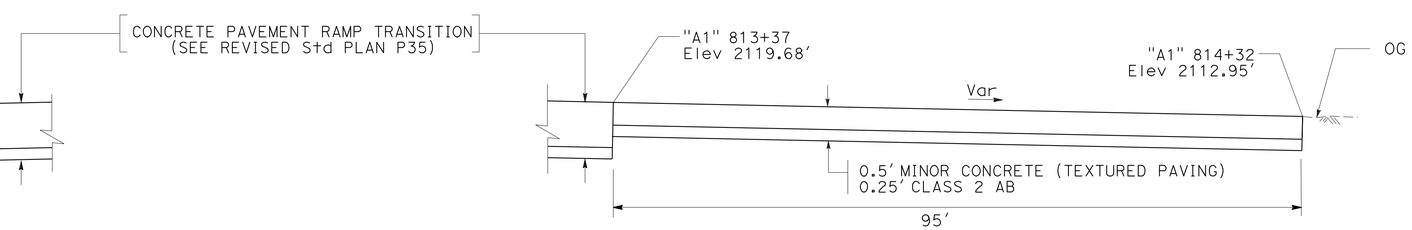

SECTION D-D

COLLIER NB OFF RAMP

MINOR CONCRETE (TEXTURED PAVING)

1 REVISED PER ADDENDUM No. 1 DATED NOVEMBER 2, 2011

CONSTRUCTION DETAILS

NO SCALE

C-11

REVISED BY | DATE REVISED
ERIC COVINGTON | TOBY CRAWFORD
CALCULATED-DESIGNED BY | CHECKED BY
FUNCTIONAL SUPERVISOR | STEVE TOPAL
STATE OF CALIFORNIA - DEPARTMENT OF TRANSPORTATION
Caltrans
DESIGN

P:\proj1\02\3E760\plans\pse\addenda_1\23e760ga011.dgn

LAST REVISION 06-14-11 | DATE PLOTTED => 01-NOV-2011 | TIME PLOTTED => 14:21

Dist	COUNTY	ROUTE	POST MILES TOTAL PROJECT	SHEET No.	TOTAL SHEETS
02	Sis	5	R50.9/R58.2	117	329

REGISTERED CIVIL ENGINEER 06-14-11 DATE

06-15-11
PLANS APPROVAL DATE

REGISTERED PROFESSIONAL ENGINEER TOBY J. CRAWFORD No. C71138 Exp. 6-30-13 CIVIL STATE OF CALIFORNIA

THE STATE OF CALIFORNIA OR ITS OFFICERS OR AGENTS SHALL NOT BE RESPONSIBLE FOR THE ACCURACY OR COMPLETENESS OF SCANNED COPIES OF THIS PLAN SHEET.

NOTES:

1. PAVEMENT ANCHORS AND UNDERDRAINS SHALL BE PLACED PERPENDICULAR TO THE LANE AND SHALL EXTEND THE FULL WIDTH OF THE CRCP SECTION. SEE SUMMARY OF QUANTITIES FOR PAVEMENT ANCHOR LOCATIONS.
2. UNDERDRAINS TO BE PLACED WITH ANCHOR BLOCKS AT NB "A1" 460+52 AND "B1" 815+71, AND SB "A1" 460+69 AND "C1" 819+31 ONLY.

1

MINOR Conc (Misc Const)

STATION	SIDE L+	SIDE R+	* CF
"A1" 460+69	X		0.40
"A1" 460+52		X	0.40
"B1" 815+71		X	0.40
"C1" 819+31	X		0.40
TOTAL			1.60

* INCLUDED IN RAMP AND REST AREA QUANTITIES TABLE (Q-1)

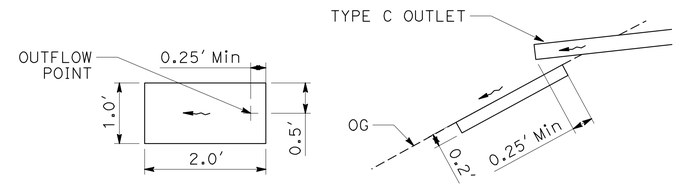

SPLASH PAD
MINOR Conc (Misc Const)

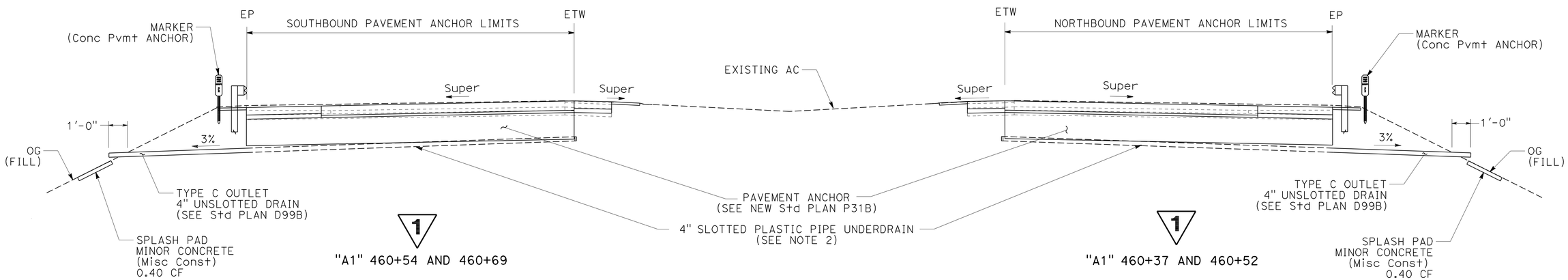

1 "A1" 460+54 AND 460+69

1 "A1" 460+37 AND 460+52

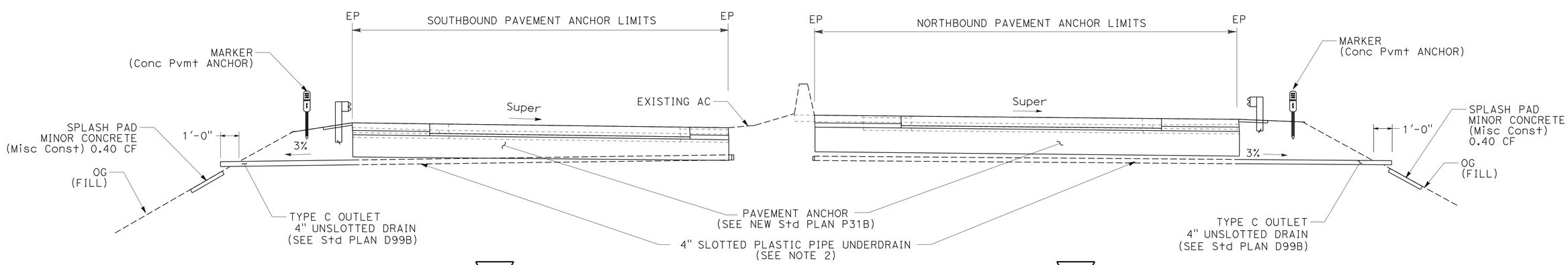

1 "C1" 819+31 AND 819+46

1 "B1" 815+71 AND 815+86

PAVEMENT ANCHOR AND UNDERDRAIN

1 REVISED PER ADDENDUM No. 1 DATED NOVEMBER 2, 2011

CONSTRUCTION DETAILS
NO SCALE

C-12

REVISED BY | DATE REVISED
ERIC COVINGTON | TOBY CRAWFORD
CALCULATED-DESIGNED BY | CHECKED BY
FUNCTIONAL SUPERVISOR: STEVE TOPAL

STATE OF CALIFORNIA - DEPARTMENT OF TRANSPORTATION
Caltrans
DESIGN

P:\proj1\02\3E760_plans\pse\addenda_1\23e760ga012.dgn

LAST REVISION 06-14-11 | DATE PLOTTED => 01-NOV-2011 | TIME PLOTTED => 14:21

Dist	COUNTY	ROUTE	POST MILES TOTAL PROJECT	SHEET No.	TOTAL SHEETS
02	Sis	5	R50.9/R58.2	164	329

Robert Weber 06-14-11
REGISTERED CIVIL ENGINEER DATE

06-15-11
PLANS APPROVAL DATE

REGISTERED PROFESSIONAL ENGINEER ROBERT WEBER No. C62511 Exp. 9-30-11 CIVIL STATE OF CALIFORNIA

THE STATE OF CALIFORNIA OR ITS OFFICERS OR AGENTS SHALL NOT BE RESPONSIBLE FOR THE ACCURACY OR COMPLETENESS OF SCANNED COPIES OF THIS PLAN SHEET.

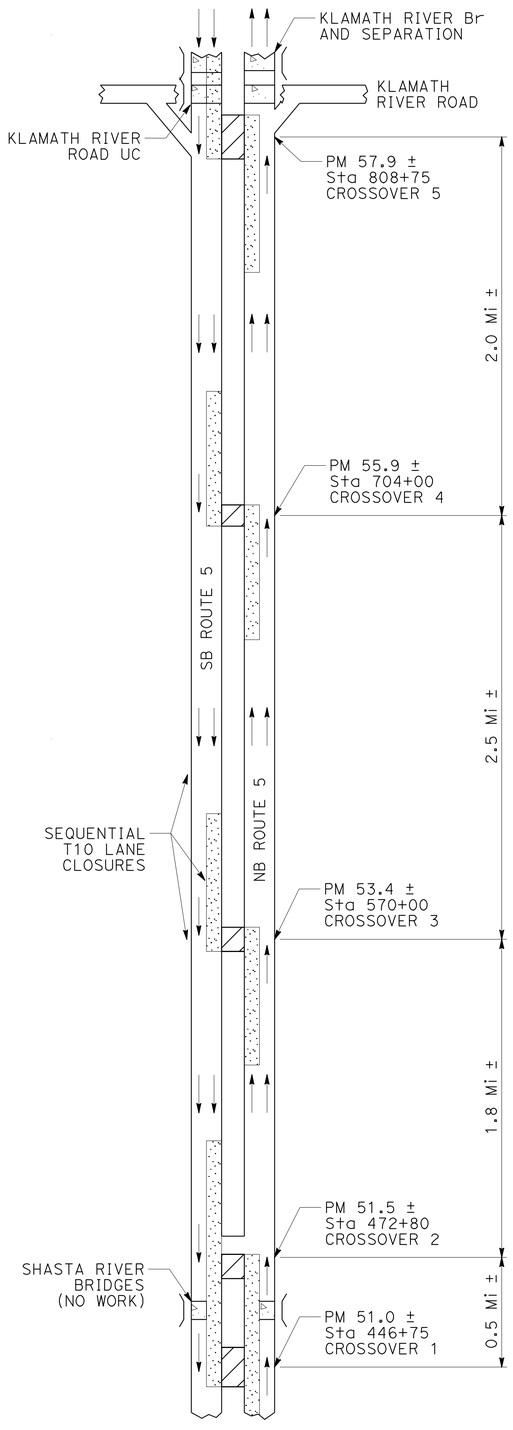

MEDIAN CROSSOVERS
LOCATION AND TRAFFIC HANDLING

NOTES:

1. SEE STAGE CONSTRUCTION AND TRAFFIC HANDLING DETAILS FOR ADDITIONAL INFORMATION.
2. POST MILE AND STATIONING DATA GIVEN AT CROSSOVERS ARE TO THE APPROXIMATE CENTER.
3. WHEN CROSSOVERS 3-5 ARE NOT BEING USED TO SHIFT TRAFFIC, TEMPORARY RAILING (TYPE K) SHALL BE PLACED TO CREATE A SAFETY BARRIER BETWEEN THE NB AND SB LANES.
4. WORK ON DRAINAGE INLETS IDENTIFIED IN TABLE MAY BE DONE UNDER T-10 LANE CLOSURES. (1)
5. DRAINAGE INLET WORK SHALL BE STAGED SUCH THAT THE MODIFIED INLETS WILL CONTINUE TO PROVIDE DRAINAGE FOR ADJACENT LIVE LANES.
6. GAPS IN THE CONCRETE BARRIER AT DRAINAGE INLETS SHALL BE RESTORED OR PROTECTED PRIOR TO OPENING ADJACENT LANES TO LIVE TRAFFIC.

LEGEND:

- BRIDGE DECK AND APPROACH SLAB (NO WORK)
- XXX CLOSURE
- LANE CLOSURE
- WORK AREA

ABBREVIATIONS:

Bking	BACKING
CJ	CONSTRUCTION JOINT

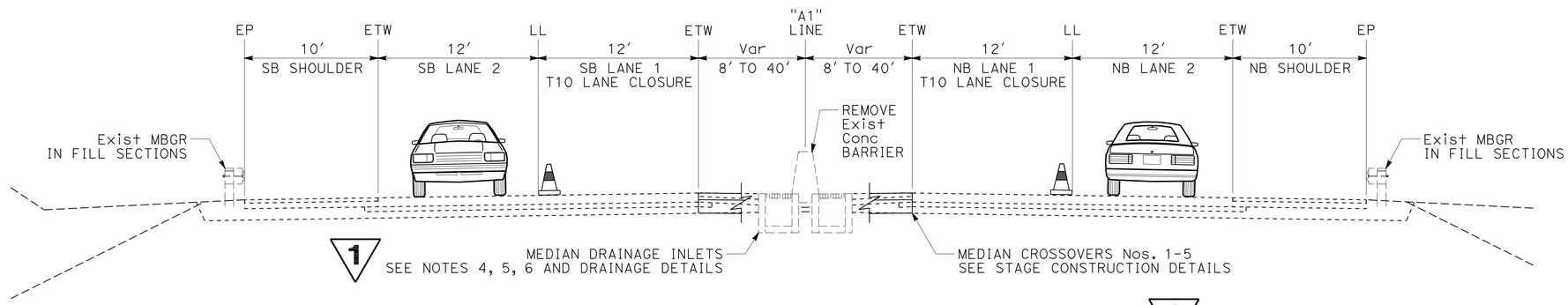

MEDIAN CROSSOVERS AND DRAINAGE INLETS (1)
STAGES 1A-1C, 3A-3C

CONSTRUCTION AND TRAFFIC HANDLING
"A1" 442+00 TO "A1" 813+50

MEDIAN CROSSOVERS

CROSSOVER NUMBER	STATION RANGE	USAGE					
		STAGE 1A	STAGE 1B	STAGE 1C	STAGE 3A	STAGE 3B	STAGE 3C
1	"A1" 442+00 TO 451+50	X	X				X
2	"A1" 466+00 TO 474+51		X				
3	"A1" 567+75 TO 572+00	X	X			X	X
4	"A1" 700+00 TO 708+00		X	X	X	X	
5	"A1" 802+75 TO 813+50			X	X		

(1) DRAINAGE INLETS

SYSTEM NUMBER	STATION	SYSTEM NUMBER	STATION
11	"A1" 567+77	30	"A1" 730+00, 730+65, 734+60
17	"A1" 621+50	31	"A1" 743+49
21	"A1" 653+00	32	"A1" 748+64, 749+00
22	"A1" 645+00, 654+30	33	"A1" 755+20
26	"A1" 690+92	34	"A1" 762+50
28	"A1" 720+00	35	"A1" 767+50
29	"A1" 724+02	36	"A1" 773+00, 773+75, 774+15

(1) **REVISED PER ADDENDUM No. 1 DATED NOVEMBER 2, 2011**

STAGE CONSTRUCTION AND TRAFFIC HANDLING PLAN
NO SCALE

SC-3

THIS PLAN ACCURATE FOR STAGE CONSTRUCTION AND TRAFFIC HANDLING WORK ONLY

CALCULATED-DESIGNED BY	ROBERT WEBER	REVISED BY	R. WEBER
CHECKED BY	ROBERT REGINATO	DATE REVISED	11-01-11
FUNCTIONAL SUPERVISOR	STEVE TOPAL		

STATE OF CALIFORNIA - DEPARTMENT OF TRANSPORTATION
Caltrans® DESIGN

P:\proj1\02\3E760_plans\pse\addenda_1\23e760ma003.dgn

LAST REVISION 11-01-11 | DATE PLOTTED => 01-NOV-2011 TIME PLOTTED => 14:21

Dist	COUNTY	ROUTE	POST MILES TOTAL PROJECT	SHEET No.	TOTAL SHEETS
02	Sis	5	R50.9/R58.2	176	329

Robert Weber 06-14-11
REGISTERED CIVIL ENGINEER DATE

06-15-11
PLANS APPROVAL DATE

REGISTERED PROFESSIONAL ENGINEER ROBERT WEBER No. C62511 Exp. 9-30-11 CIVIL STATE OF CALIFORNIA

THE STATE OF CALIFORNIA OR ITS OFFICERS OR AGENTS SHALL NOT BE RESPONSIBLE FOR THE ACCURACY OR COMPLETENESS OF SCANNED COPIES OF THIS PLAN SHEET.

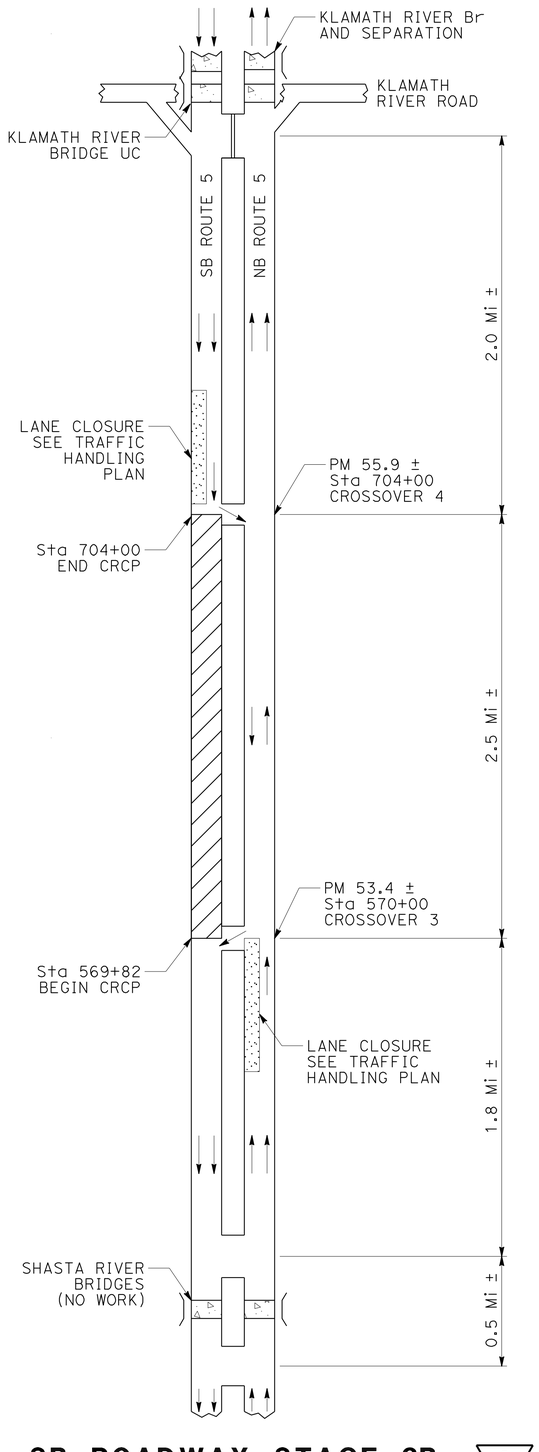

SB ROADWAY STAGE 3B
WORK LOCATION AND TRAFFIC HANDLING

1 NOTES:

1. AN ADDITIONAL RUN OF K-RAIL SHALL BE PLACED BETWEEN "A1" 609+00-620+50, "A1" 691+20-692+20 AND "A1" 778+25-803+00 DURING REPLACEMENT OF THE EXISTING CONCRETE BARRIER. PLACE A TEMPORARY CRASH CUSHION (ALTERNATIVE IN-LINE) AT APPROACH END OF RUN.
2. MAINTAIN A 16′ MINIMUM, TOE TO TOE CLEARANCE BETWEEN RUNS OF K-RAIL.
3. SECTION VIEW SHOWN WOULD BE MIRRORED IF WORKING FROM THE NB ROADWAY DURING STAGES 1B-1C.

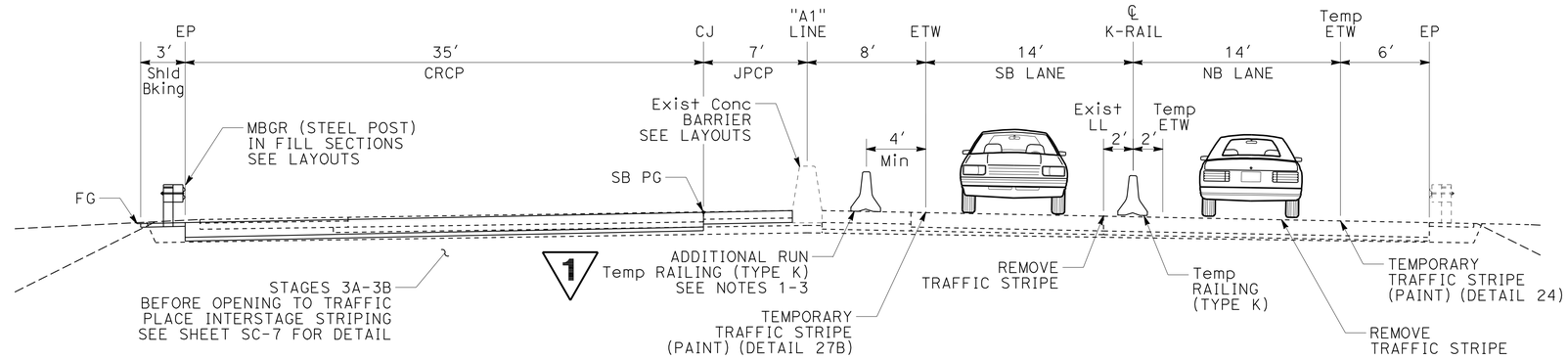

SB ROADWAY STAGES 3B-3C
CONSTRUCTION AND TRAFFIC HANDLING
"A1" 572+00 TO "A1" 803+00 1

SB ROADWAY STAGE 3B

DIRECTION	STATION RANGE	CONSTRUCTION AREA SPEED ZONE REDUCTION	LANE CLOSURE	CROSSOVERS (3-4)	ROADWAY WORK
NB	"A1" 498+00 TO 532+00	X			
NB	"A1" 532+00 TO 570+50		X		
NB	"A1" 565+75 TO 709+00			X	
SB	"A1" 569+82 TO 704+00				X
SB	"A1" 709+00 TO 744+00		X		
SB	"A1" 744+00 TO 778+00	X			

1 **REVISED PER ADDENDUM No. 1 DATED NOVEMBER 2, 2011**

THIS PLAN ACCURATE FOR STAGE CONSTRUCTION AND TRAFFIC HANDLING WORK ONLY

STAGE CONSTRUCTION AND TRAFFIC HANDLING PLAN
NO SCALE

SC-15

REVISED BY	DATE REVISED
R. WEBER	10-31-11

CALCULATED-DESIGNED BY: ROBERT WEBER
CHECKED BY: ROBERT REGINATO
FUNCTIONAL SUPERVISOR: STEVE TOPAL

STATE OF CALIFORNIA - DEPARTMENT OF TRANSPORTATION
Caltrans
DESIGN

P:\proj1\02\3E760_plans\pse\addenda_1\23e760ma015.dgn

LAST REVISION 10-31-11
DATE PLOTTED => 01-NOV-2011
TIME PLOTTED => 14:21

Dist	COUNTY	ROUTE	POST MILES TOTAL PROJECT	SHEET No.	TOTAL SHEETS
02	Sis	5	R50.9/R58.2	214	329

Robert Weber 06-14-11
REGISTERED CIVIL ENGINEER DATE

06-15-11
PLANS APPROVAL DATE

REGISTERED PROFESSIONAL ENGINEER ROBERT WEBER No. C62511 Exp. 9-30-11 CIVIL STATE OF CALIFORNIA

THE STATE OF CALIFORNIA OR ITS OFFICERS OR AGENTS SHALL NOT BE RESPONSIBLE FOR THE ACCURACY OR COMPLETENESS OF SCANNED COPIES OF THIS PLAN SHEET.

NOTE:

1. (N) - NOT A SEPARATE PAY ITEM, FOR INFORMATION ONLY

TRAFFIC HANDLING QUANTITIES

STATION	NORTHBOUND	SOUTHBOUND	TEMPORARY TRAFFIC STRIPE (TAPE) YELLOW DETAIL 24	TEMPORARY TRAFFIC STRIPE (TAPE) WHITE DETAIL 27B	TEMPORARY PAVEMENT MARKING (TAPE)	TEMPORARY TRAFFIC STRIPE (PAINT) YELLOW 4" DETAIL 24	TEMPORARY TRAFFIC STRIPE (PAINT) WHITE 4" DETAIL 27B	CHANNELIZER (SURFACE MOUNTED)	PAINT TRAFFIC STRIPE (2 COAT) YELLOW 4" DETAIL 24	PAINT TRAFFIC STRIPE (2 COAT) WHITE 4" (BROKEN 17-7) DETAIL 8	PAINT TRAFFIC STRIPE (2 COAT) WHITE 4" (BROKEN 36-12) DETAIL 11	PAINT TRAFFIC STRIPE (2 COAT) WHITE 4" DETAIL 27B	PAINT TRAFFIC STRIPE (2 COAT) WHITE 8"	TEMPORARY RAILING (TYPE K)	TEMPORARY CRASH CUSHION (ALTERNATIVE IN-LINE) TEMPORARY RAILING (TYPE K)	TEMPORARY CRASH CUSHION (ALTERNATIVE IN-LINE) WILDLIFE PASSAGEWAY (TYPE L)	TEMPORARY CRASH CUSHION (ALTERNATIVE IN-LINE) BARRIER OPENING (ARROW BOARD)	(N) OBJECT MARKER (TYPE P)	REMOVE YELLOW THERMOPLASTIC TRAFFIC STRIPE (HAZZARDOUS WASTE)	REMOVE TRAFFIC STRIPE	REMOVE PAVEMENT MARKER	REMARKS
			LF	LF	SQFT	LF	LF	EA	LF	LF	LF	LF	LF	LF	EA	EA	EA	EA	LF	LF	EA	
STAGE 1A																						
"A1" 420+00 TO 440+00	X			1000	126			26												580	32	TYPICAL LANE CLOSURE
"A1" 440+00 TO 573+30	X		1800	1800			11,550	43								1		1				NB TRAFFIC STRIPES
"A1" 446+50 TO 571+50														13,200								Temp RAILING (TYPE K)
"A1" 452+63 TO 454+23		X												160								PROTECT BRIDGE RAIL END
"A1" 568+00 TO 573+30	X													540								Temp RAILING (TYPE K)
"A1" 446+50 TO 568+00		X		350			14,620													3000		SB TRAFFIC STRIPES
"A1" 568+00 TO 591+50		X	1350	350	126			33											200	380	37	TYPICAL LANE CLOSURE
"C011" 10+00 TO 14+50	X																		450		10	REMOVE ETW (LEFT)
"A1" 425+00 TO 573+30	X								14,860		14,850	15,060										RESTORE NB STRIPES
"A1" 446+50 TO 571+50		X																		15,320		REMOVE ETW (RIGHT)
"A1" 446+50 TO 586+50		X							12,360		13,490	13,170	580							14,620		RESTORE SB STRIPES
"C011" 19+00 TO 21+63		X																	270		7	REMOVE ETW (LEFT)
"C031" 13+00 TO 16+33	X																		340		8	REMOVE ETW (LEFT)
"A1" 466+00 TO 490+50			2810	1820	126			28						1300								CROSSOVER 2
SUBTOTAL -- STAGE 1A			5960	5320	378		26,170	130	27,220		28,340	28,230	580	15,200		1		1	1260	33,900	94	
STAGE 1B																						
"A1" 546+25 TO 566+25	X			1000	126			26												580		TYPICAL LANE CLOSURE
"A1" 566+25 TO 708+00	X		980	1430			13,100	15								1	2	3				NB TRAFFIC STRIPES
"A1" 566+12 TO 571+50	X													540	1			1				Temp RAILING (TYPE K)
"A1" 568+00 TO 707+00														15,120								Temp RAILING (TYPE K)
1 "A1" 609+00 TO 620+50		X												1150	1			1				Temp RAILING (TYPE K)
"A1" 701+00 TO 708+00	X													700								Temp RAILING (TYPE K)
"A1" 567+00 TO 722+50		X		350			13,320													3800		SB TRAFFIC STRIPES
"A1" 704+00 TO 727+50		X	1360	350	126			28											200		5	TYPICAL LANE CLOSURE
"C032" 30+00 TO 32+00	X																		200		5	REMOVE ETW (LEFT)
"A1" 551+25 TO 708+00	X								14,090		14,100	14,140										RESTORE NB STRIPES
"A1" 567+00 TO 707+50		X																		14,020		REMOVE ETW (RIGHT)
"A1" 567+00 TO 722+50		X							14,150		15,190	13,320								13,320		RESTORE SB STRIPES
"C032" 31+30 TO 33+76		X																	250		6	REMOVE ETW (LEFT)
"C041" 10+00 TO 13+25		X																	330		8	REMOVE ETW (LEFT)
"C041" 12+75 TO 16+01	X																		330		8	REMOVE ETW (LEFT)
"A1" 568+00 TO 571+50														350								CLOSE CROSSOVER 3
SUBTOTAL -- STAGE 1B			2340	3130	252		26,420	69	28,240		29,290	27,460		17,860	2	1	2	5	1310	31,720	32	

1 1 1

1 REVISED PER ADDENDUM No. 1 DATED NOVEMBER 2, 2011

STAGE CONSTRUCTION AND TRAFFIC HANDLING QUANTITIES

SCQ-1

REVISED BY | DATE REVISED
RUSSELL FLOOD | ROBERT WEBER
CALCULATED-DESIGNED BY | CHECKED BY
FUNCTIONAL SUPERVISOR: STEVE TOPAL

STATE OF CALIFORNIA - DEPARTMENT OF TRANSPORTATION
Caltrans® DESIGN

P:\proj1\02\3E760_plans\pse\addenda_1\23e760mc001.dgn

LAST REVISION 06-14-11 | DATE PLOTTED => 01-NOV-2011 | TIME PLOTTED => 14:21

Dist	COUNTY	ROUTE	POST MILES TOTAL PROJECT	SHEET No.	TOTAL SHEETS
02	Sis	5	R50.9/R58.2	215	329

Robert Weber 06-14-11
REGISTERED CIVIL ENGINEER DATE

06-15-11
PLANS APPROVAL DATE

REGISTERED PROFESSIONAL ENGINEER ROBERT WEBER No. C62511 Exp. 9-30-11 CIVIL STATE OF CALIFORNIA

THE STATE OF CALIFORNIA OR ITS OFFICERS OR AGENTS SHALL NOT BE RESPONSIBLE FOR THE ACCURACY OR COMPLETENESS OF SCANNED COPIES OF THIS PLAN SHEET.

NOTE:

1. (N) - NOT A SEPARATE PAY ITEM, FOR INFORMATION ONLY

TRAFFIC HANDLING QUANTITIES

STATION	NORTHBOUND	SOUTHBOUND	TEMPORARY TRAFFIC STRIPE (TAPE)		TEMPORARY PAVEMENT MARKING (TAPE)	TEMPORARY TRAFFIC STRIPE (PAINT)		CHANNELIZER (SURFACE MOUNTED)	PAINT TRAFFIC STRIPE (2 COAT)					TEMPORARY RAILING (TYPE K)	TEMPORARY CRASH CUSHION (ALTERNATIVE IN-LINE)			(N) OBJECT MARKER (TYPE P)	REMOVE YELLOW THERMOPLASTIC TRAFFIC STRIPE (HAZARDOUS WASTE)	REMOVE TRAFFIC STRIPE	REMOVE PAVEMENT MARKER	REMARKS
			YELLOW DETAIL 24	WHITE DETAIL 27B		YELLOW 4" DETAIL 24	WHITE 4" DETAIL 27B		YELLOW 4" DETAIL 24	WHITE 4" (BROKEN 17-7) DETAIL 8	WHITE 4" (BROKEN 36-12) DETAIL 11	WHITE 4" DETAIL 27B	WHITE 8"		TEMPORARY RAILING (TYPE K)	WILDLIFE PASSAGEWAY (TYPE L)	BARRIER OPENING (ARROW BOARD)					
			LF	LF	SQFT	LF	LF	EA	LF	LF	LF	LF	LF	LF	EA	EA	EA	EA	LF	LF	EA	
STAGE 1C																						
"A1" 679+00 TO 699+00	X			1000	126			26												580		TYPICAL LANE CLOSURE
"A1" 699+00 TO 814+00	X		1270	1370			9900	5								1	1	2				NB TRAFFIC STRIPES
"TNR1" 20+00 TO 25+65	X		340	570																		NB OFF KLAMATH RIVER Rd
"A1" 699+06 TO 707+00	X													800	1			1				Temp RAILING (TYPE K)
"A1" 701+00 TO 813+50														14,600								Temp RAILING (TYPE K)
1 "A1" 778+25 TO 803+00		X												2475	1			1				Temp RAILING (TYPE K)
"A1" 803+00 TO 808+36	X													540								Temp RAILING (TYPE K)
"A1" 703+00 TO "C1" 812+50		X	1050	1130			9890	4												2690		SB TRAFFIC STRIPES
"TSR1" 12+00 TO 23+36		X				1140	1120													1120		SB ON KLAMATH RIVER Rd
"A1" 812+50 TO "C1" 832+50		X	1010		126			21											200		5	TYPICAL LANE CLOSURE
"CO42" 30+00 TO 33+00	X																		300		7	REMOVE ETW (LEFT)
"A1" 700+00 TO 814+00	X								11,410		12,910	11,480										RESTORE NB STRIPES
"A1" 808+00 TO 810+00	X																			50	5	REMOVE LANE LINE
"A1" 703+00 TO 811+82		X																		10,870		REMOVE ETW (RIGHT)
"A1" 703+00 TO "C1" 827+50		X							11,080	280	12,350	10,870								9900		RESTORE SB STRIPES
"CO42" 33+00 TO 36+01		X																	300		7	REMOVE ETW (LEFT)
"A1" 805+00 TO 811+25		X																	630		14	REMOVE ETW (LEFT)
"A1" 807+00 TO 814+00	X																		700		16	REMOVE ETW (LEFT)
"A1" 701+00 TO 707+00														600								CLOSE CROSSOVER 4
SUBTOTAL -- STAGE 1C			3670	4070	252	1140	20,910	56	22,490	280	25,260	22,350		19,015	2	1	1	4	2130	25,210	54	
														1	1			1				
STAGE 2A																						
"A1" 781+00 TO 806+50	X		1010	560	126			32												200		TYPICAL LANE CLOSURE
"A1" 806+50 TO "B1" 827+10	X		1360	1140		1620	1120	63														NB TRAFFIC STRIPES
"A1" 801+00 TO "B1" 827+10	X																			2960		REMOVE ETW (RIGHT)
"A1" 791+00 TO 801+00	X																			380		REMOVE LANE LINE
"A1" 800+00 TO "C1" 825+00		X	460	260		2050	1820	41												100		SB TRAFFIC STRIPES
"C1" 825+00 TO 851+50		X	1570	1530	126			39											200		5	TYPICAL LANE CLOSURE
"A1" 801+50 TO 805+12		X												360	1			1				Temp RAILING (TYPE K)
"A1" 811+82 TO "C1" 830+50		X																		1890		REMOVE ETW (RIGHT)
"C1" 830+50 TO 845+50		X																		380	32	REMOVE LANE LINE
SUBTOTAL -- STAGE 2A			4400	3490	252	3670	2940	175						360	1			1	200	5910	37	

1 REVISED PER ADDENDUM No. 1 DATED NOVEMBER 2, 2011

STAGE CONSTRUCTION AND TRAFFIC HANDLING QUANTITIES
SCQ-2

REVISED BY | DATE REVISED
RUSSELL FLOOD | ROBERT WEBER
CALCULATED-DESIGNED BY | CHECKED BY
FUNCTIONAL SUPERVISOR
STEVE TOPAL

STATE OF CALIFORNIA - DEPARTMENT OF TRANSPORTATION
Caltrans
DESIGN

P:\proj1\02\3E760_plans\pse\addenda_1\23e760mc002.dgn

LAST REVISION 06-14-11 | DATE PLOTTED => 01-NOV-2011 | TIME PLOTTED => 14:21

Dist	COUNTY	ROUTE	POST MILES TOTAL PROJECT	SHEET No.	TOTAL SHEETS
02	Sis	5	R50.9/R58.2	217	329

Robert Weber 06-14-11
REGISTERED CIVIL ENGINEER DATE

06-15-11
PLANS APPROVAL DATE

REGISTERED PROFESSIONAL ENGINEER ROBERT WEBER No. C62511 Exp. 9-30-11 CIVIL STATE OF CALIFORNIA

THE STATE OF CALIFORNIA OR ITS OFFICERS OR AGENTS SHALL NOT BE RESPONSIBLE FOR THE ACCURACY OR COMPLETENESS OF SCANNED COPIES OF THIS PLAN SHEET.

NOTE:

1. (N) - NOT A SEPARATE PAY ITEM, FOR INFORMATION ONLY

TRAFFIC HANDLING QUANTITIES

STATION	NORTHBOUND	SOUTHBOUND	TEMPORARY TRAFFIC STRIPE (TAPE)		TEMPORARY PAVEMENT MARKING (TAPE)	TEMPORARY TRAFFIC STRIPE (PAINT)		CHANNELIZER (SURFACE MOUNTED)	PAINT TRAFFIC STRIPE (2-COAT)					TEMPORARY RAILING (TYPE K)	TEMPORARY CRASH CUSHION (ALTERNATIVE IN-LINE)			(N)		*		REMARKS
			YELLOW DETAIL 24	WHITE DETAIL 27B		YELLOW 4" DETAIL 24	WHITE 4" DETAIL 27B		YELLOW 4" DETAIL 24	WHITE 4" (BROKEN 17-7) DETAIL 8	WHITE 4" (BROKEN 36-12) DETAIL 11	WHITE 4" DETAIL 27B	WHITE 8"		TEMPORARY RAILING (TYPE K)	WILDLIFE PASSAGEWAY (TYPE L)	BARRIER OPENING (ARROW BOARD)	OBJECT MARKER (TYPE P)	REMOVE YELLOW THERMOPLASTIC TRAFFIC STRIPE (HAZZARDOUS WASTE)	REMOVE TRAFFIC STRIPE	REMOVE PAVEMENT MARKER	
			LF	LF	SQFT	LF	LF	EA	LF	LF	LF	LF	LF	LF	EA	EA	EA	EA	LF	LF	EA	
STAGE 3B																						
"A1" 552+50 TO 567+70	X		1060		126			27												580		TYPICAL LANE CLOSURE
"A1" 567+70 TO 707+00	X		390				14,040	9								1	2	3		3370		NB TRAFFIC STRIPES
"CO33" 50+00 TO 55+78		X												580								Temp RAILING (TYPE K)
"A1" 568+00 TO 707+00														13,920								Temp RAILING (TYPE K)
"A1" 701+00 TO 709+06		X												800								Temp RAILING (TYPE K)
"A1" 565+75 TO 709+00		X	1180	860			13,060															SB TRAFFIC STRIPES
"A1" 709+00 TO 729+00		X		1010	126			27												580		TYPICAL LANE CLOSURE
"CO33" 50+00 TO 54+00		X																		400		REMOVE ETW (LEFT)
"A1" 552+50 TO 707+00	X								13,910		14,950	14,040								14,040		RESTORE NB STRIPES
"A1" 567+00 TO 707+00	X																			14,040		REMOVE ETW (RIGHT)
"A1" 565+75 TO 724+00		X							14,220		15,820	13,470										RESTORE SB STRIPES
"CO33" 53+00 TO 55+78	X																			280		REMOVE ETW (LEFT)
"CO44" 70+00 TO 73+00	X																			300		REMOVE ETW (LEFT)
"CO44" 73+00 TO 76+01		X																		300		REMOVE ETW (LEFT)
"A1" 701+00 TO 707+00														600								CLOSE CROSSOVER 4
SUBTOTAL -- STAGE 3B			2630	1870	252		27,100	63	28,130		30,770	27,510		15,900		1	2	3		33,890		
STAGE 3C																						
"A1" 431+50 TO 450+00	X		1420	350	126			35											200	380	5	TYPICAL LANE CLOSURE
"A1" 450+00 TO 572+50	X		150				12,250									1		1				NB TRAFFIC STRIPES
"A1" 442+00 TO 571+50														12,940								Temp RAILING (TYPE K)
"A1" 459+70 TO 461+30														160								PROTECT BRIDGE RAIL END
"A1" 568+00 TO 573+00														500	1			1				Temp RAILING (TYPE K)
"A1" 442+00 TO 572+50		X	1340	1110			11,680	26														SB TRAFFIC STRIPES
"A1" 572+50 TO 587+50		X		1040	126			27												580		TYPICAL LANE CLOSURE
"CO12" 30+00 TO 32+50		X																	250		7	REMOVE ETW (LEFT)
"A1" 431+50 TO 572+50	X																			12,490		RESTORE NB STRIPES
"A1" 446+50 TO 572+50	X																			12,490		REMOVE ETW (RIGHT)
"CO12" 36+50 TO 39+52	X																		300		8	REMOVE ETW (LEFT)
"CO34" 70+00 TO 72+50	X																			250		REMOVE ETW (LEFT)
"CO34" 72+00 TO 73+81		X																		180		REMOVE ETW (LEFT)
"A1" 568+00 TO 571+50														350								CLOSE CROSSOVER 3
SUBTOTAL -- STAGE 3C			2910	2500	252		23,930	88						13,950	1	1		2	750	26,370	20	
SUBTOTAL			28,520	26,900		9090	148,770		137,260	840	148,470	133,640	2080		10	6	6					
TOTAL			55,420		2142	157,860		736	422,290					102,475	22			22	6630	189,020	291	

* INCLUDED IN TRAFFIC STRIPES AND PAVEMENT MARKERS QUANTITY TABLE (SHEET PDQ-1)

1 1 1

1 REVISED PER ADDENDUM No. 1 DATED NOVEMBER 2, 2011

STAGE CONSTRUCTION AND TRAFFIC HANDLING QUANTITIES

SCQ-4

REVISED BY | DATE REVISED
RUSSELL FLOOD | ROBERT WEBER
CALCULATED-DESIGNED BY | CHECKED BY
FUNCTIONAL SUPERVISOR: STEVE TOPAL
STATE OF CALIFORNIA - DEPARTMENT OF TRANSPORTATION
Caltrans® DESIGN

P:\proj1\02\3E760_plans\pse\addenda_1\23e760mc004.dgn

LAST REVISION 06-14-11 | DATE PLOTTED => 01-NOV-2011 | TIME PLOTTED => 14:22

DIST	COUNTY	ROUTE	POST MILES TOTAL PROJECT	SHEET NO.	TOTAL SHEETS
02	Sis	5	R50.9/R58.2	294a	329

REGISTERED CIVIL ENGINEER

June 5, 2009
PLANS APPROVAL DATE

REGISTERED PROFESSIONAL ENGINEER Glenn DeCou No. C34547 Exp. 9-30-09 CIVIL STATE OF CALIFORNIA

The State of California or its officers or agents shall not be responsible for the accuracy or completeness of electronic copies of this plan sheet.

To accompany plans dated 06-15-11

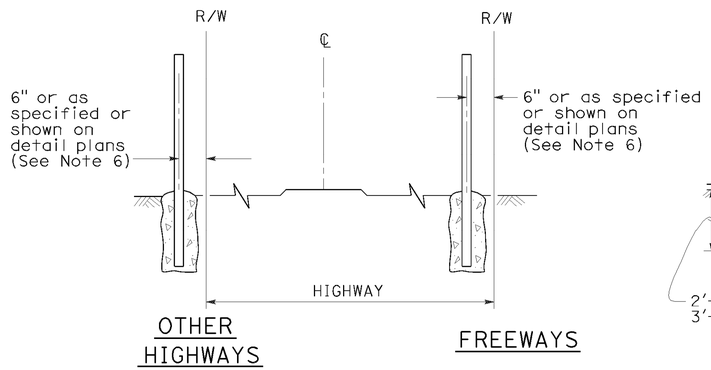

FENCE LOCATION

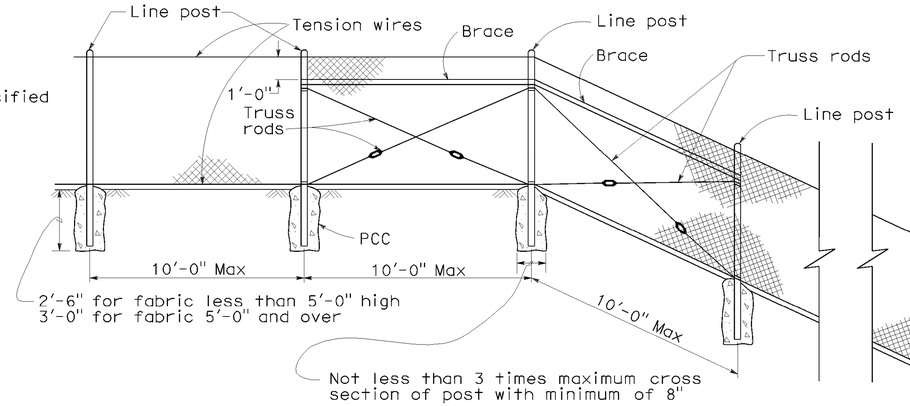

CHAIN LINK FENCE ON SHARP BREAK IN GRADE

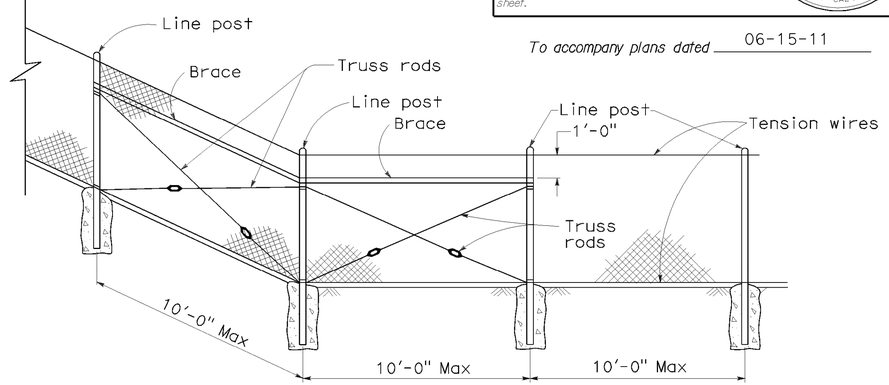

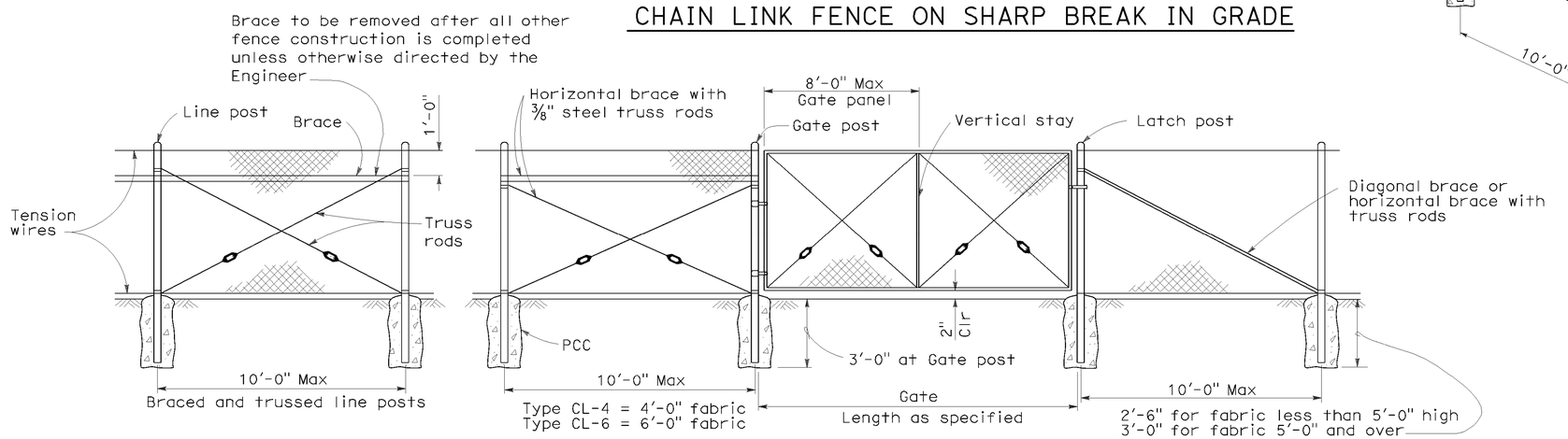

CHAIN LINK GATE INSTALLATION

GATE POST			
FENCE HEIGHT	GATE WIDTHS	NOMINAL ID	WEIGHT PER FOOT
6'-0" and Less	Up thru 6'-0"	2½"	4.95 LB
	Over 6'-0" thru 12'-0"	4"	10.79 LB
	Over 12'-0" thru 18'-0"	5"	14.62 LB
	Over 18'-0" to 24'-0" Max	6"	18.97 LB
Over 6'-0"	Up thru 6'-0"	3"	7.58 LB
	Over 6'-0" thru 12'-0"	5"	14.62 LB
	Over 12'-0" thru 18'-0"	6"	18.97 LB
	Over 18'-0" to 24'-0" Max	8"	28.55 LB

Above post dimensions and weights are minimums. Larger sizes may be used on approval of the Engineer.

NOTES:

1. The below table shows examples of post and brace sections which may comply with the Specifications.
2. Sections shown in the tables must also comply with the strength requirements and other provisions of the Specifications.
3. Other sections which comply with the strength requirements and other provisions of the Specifications may be used on approval of the Engineer.
4. Options exercised shall be uniform on any one project.
5. Dimensions shown are nominal.
6. Offset to be 2'-0" at monument locations, measured at right angles to R/W lines. Taper to achieve offset to be at least 20'-0" long.

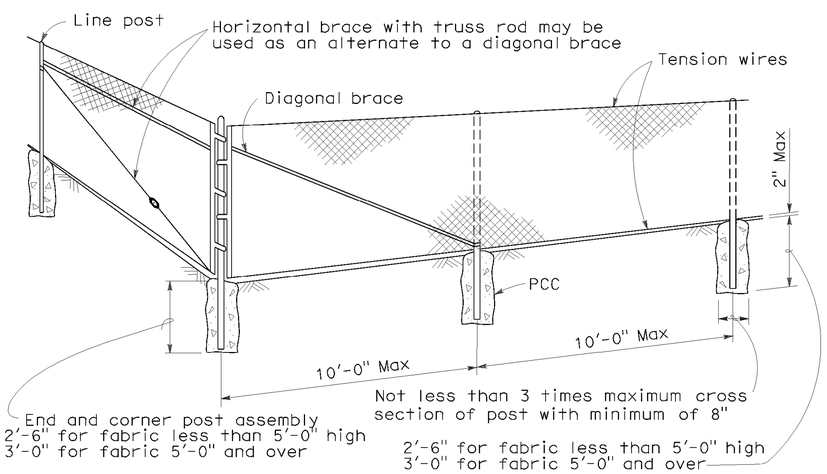

CORNER POST

TYPICAL MEMBER DIMENSIONS (See Notes)											
FENCE HEIGHT	LINE POSTS			END, LATCH & CORNER POSTS				BRACES			
	ROUND ID	H	ROLL FORMED	ROUND ID	ROLL FORMED			ROUND ID	H	ROLL FORMED	
6' & less	1½"	1⅞" × 1⅝"	1⅞" × 1⅝"	2"	3½" × 3½"	2" × 1¾"		1¼"	1½" × 1 5/16"	1⅝" × 1¼"	1¾" × 1¼"
Over 6'	2"	2¼" × 2"	2" × 1¾"	2½"	3½" × 3½"	2½" × 2½"		1¼"	1½" × 1 5/16"	1⅝" × 1¼"	1¾" × 1¼"

STATE OF CALIFORNIA
DEPARTMENT OF TRANSPORTATION

CHAIN LINK FENCE

NO SCALE

RSP A85 DATED JUNE 5, 2009 SUPERSEDES STANDARD PLAN A85
DATED MAY 1, 2006 - PAGE 111 OF THE STANDARD PLANS BOOK DATED MAY 2006.

REVISED STANDARD PLAN RSP A85

2006 REVISED STANDARD PLAN RSP A85

P:\proj1\02\3E760_plans\pse\addenda_1\23e760va294a.dgn

5-7-09

DIST	COUNTY	ROUTE	POST MILES TOTAL PROJECT	SHEET NO.	TOTAL SHEETS
02	Sis	5	R50.9/R58.2	294b	329

REGISTERED CIVIL ENGINEER

June 5, 2009
PLANS APPROVAL DATE

REGISTERED PROFESSIONAL ENGINEER Glenn DeCou No. C34547 Exp. 9-30-09 CIVIL STATE OF CALIFORNIA

The State of California or its officers or agents shall not be responsible for the accuracy or completeness of electronic copies of this plan sheet.

To accompany plans dated 06-15-11

NOTES:

1. H is 2'-6" for fabric less than 5'-0" high. H is 3'-0" for fabric 5'-0" and over.
2. T is not less than 3 times maximum cross section of post with minimum of 8".
3. Arms with barbed wire to be used where shown on plans.
4. See Revised Standard Plan RSP A85 for Chain Link Fencing dimensions.
5. Reinforcing must comply with ASTM A 706.
6. See Detail A on New Standard Plan NSP A86B for connection at headwall.

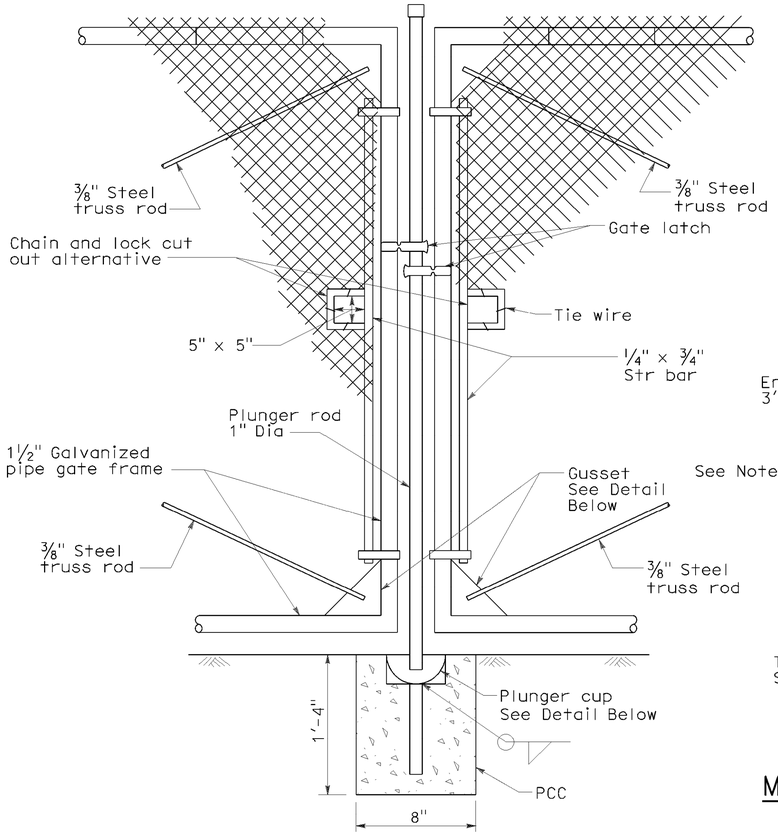

TYPICAL DOUBLE GATE REMOVABLE CENTER POST

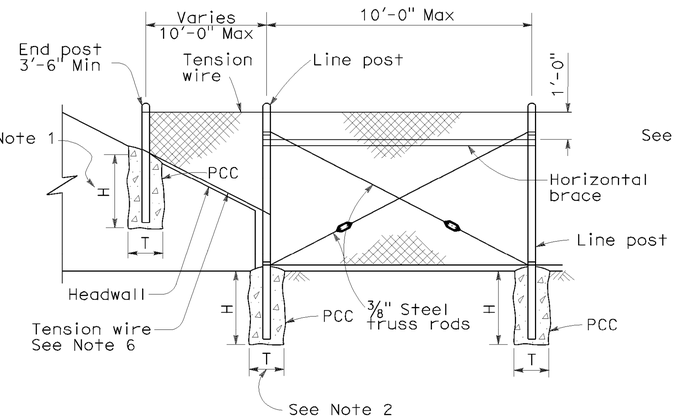

METHOD OF TYING FENCE TO HEADWALL

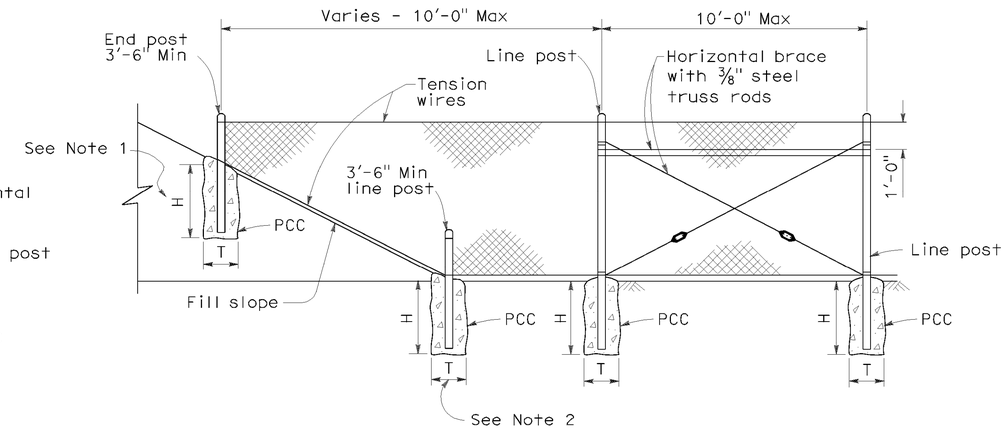

METHOD OF ERECTING FENCE FOR FILL SLOPE

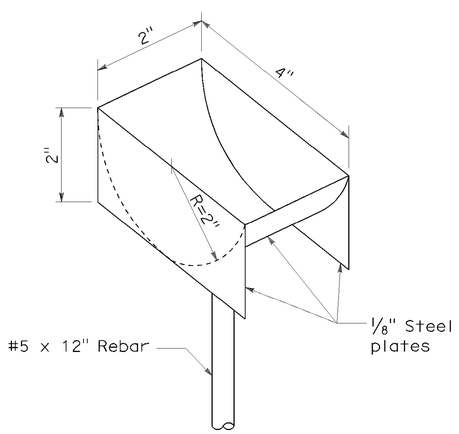

PLUNGER CUP DETAIL

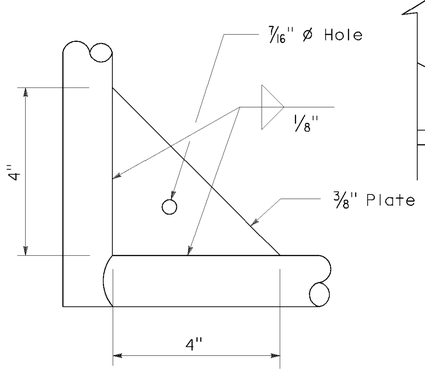

GUSSET DETAIL

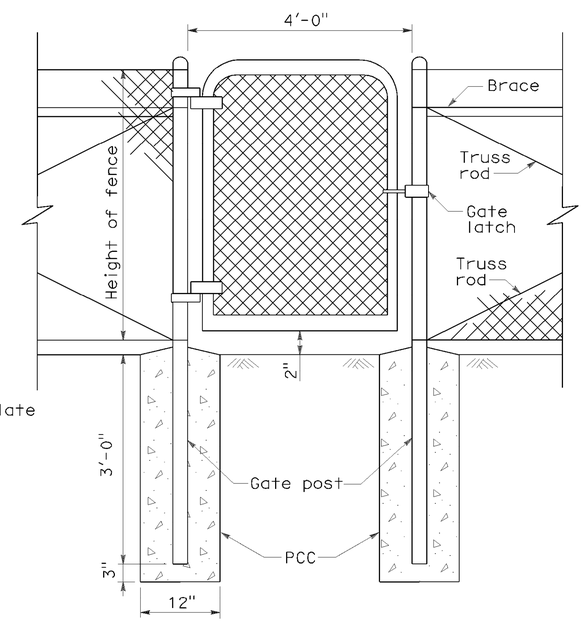

WALK GATE

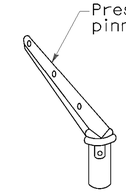

POST TOP END

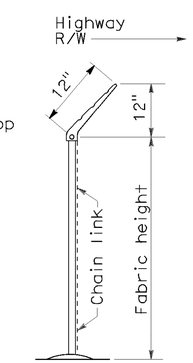

END ELEVATION

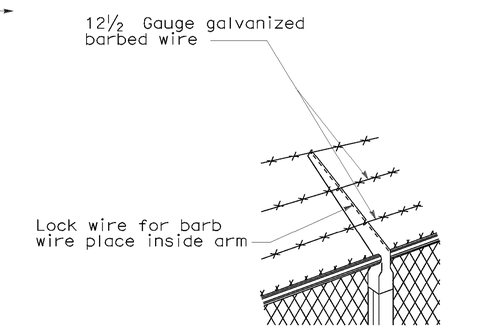

LINE POST TOP
Vertical arms when desired

BARBED WIRE POST TOP
See Note 3

STATE OF CALIFORNIA
DEPARTMENT OF TRANSPORTATION

CHAIN LINK FENCE DETAILS

NO SCALE

NSP A85A DATED JUNE 5, 2009 SUPPLEMENTS THE STANDARD PLANS BOOK DATED MAY 2006.

NEW STANDARD PLAN NSP A85A

2006 NEW STANDARD PLAN NSP A85A

P:\proj1\02\3E760_plans\pse\addenda_1\23e760va294b.dgn

5-7-09

DIST	COUNTY	ROUTE	POST MILES TOTAL PROJECT	SHEET NO.	TOTAL SHEETS
02	Sis	5	R50.9/R58.2	294c	329

REGISTERED CIVIL ENGINEER

June 5, 2009
PLANS APPROVAL DATE

REGISTERED PROFESSIONAL ENGINEER Glenn DeCou No. C34547 Exp. 9-30-09 CIVIL STATE OF CALIFORNIA

The State of California or its officers or agents shall not be responsible for the accuracy or completeness of electronic copies of this plan sheet.

To accompany plans dated 06-15-11

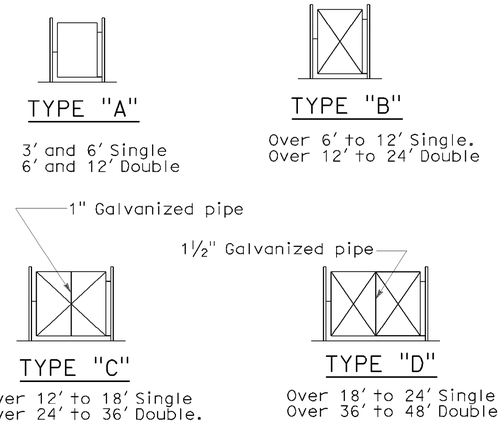

TYPICAL FRAMEWORK SHOWING NUMBER OF BAYS IN GATE

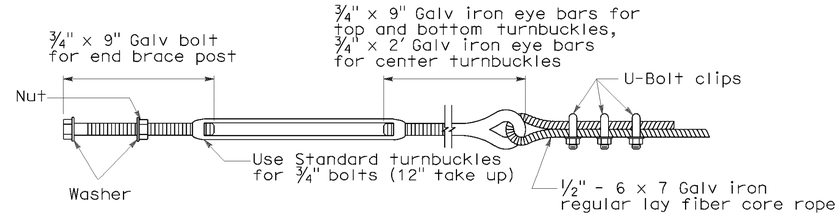

TURNBUCKLE A

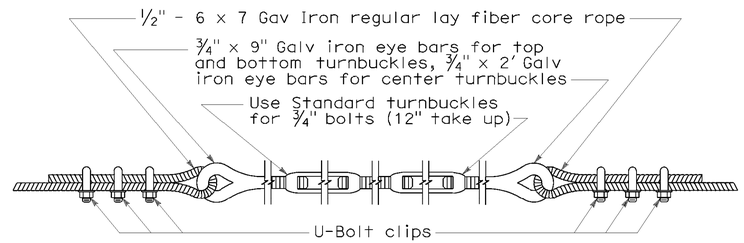

TURNBUCKLE B

NOTES:

1. All material for abutment connection to be galvanized.
2. The chain link fabric shall be replaced by barbed wire strands at 12" maximum centers between the double posts.
3. When the width of the culvert makes it necessary to anchor a post to the top of the culvert, a cast iron shoe or other device approved by the Engineer shall be used.
4. Fencing over stream and around headwall may also use Barbed Wire or Wire Mesh fencing with either wood post or steel post installation.
5. See Revised Standard Plan RSP A85 for Chain Link fence dimensions. See Standard Plan A86 for Barbed Wire and Wire Mesh fence dimensions and for wood post and steel post installation.

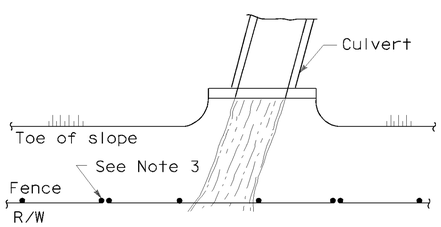

PLAN

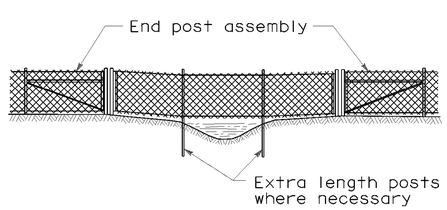

ELEVATION

INSTALLATION OVER STREAM

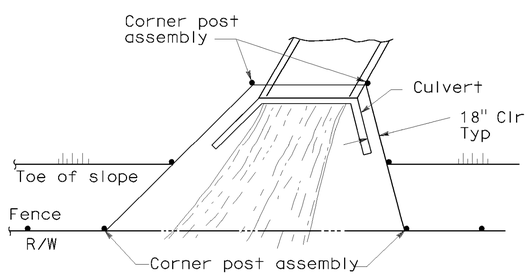

PLAN

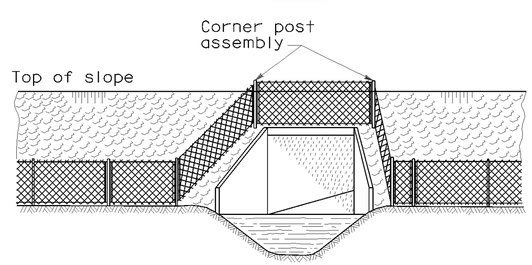

ELEVATION

INSTALLATION AROUND HEADWALL

See Note 4

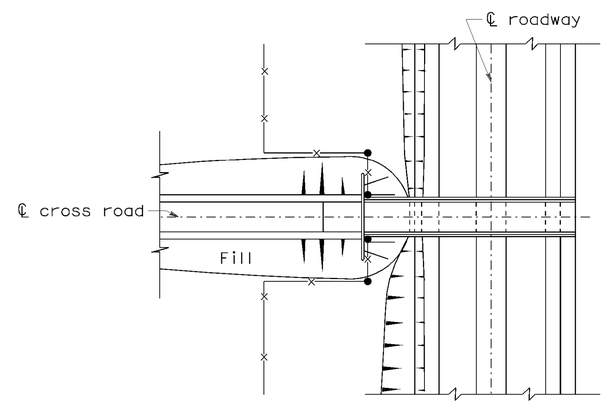

PLAN OF ROADWAY - UNDERPASS

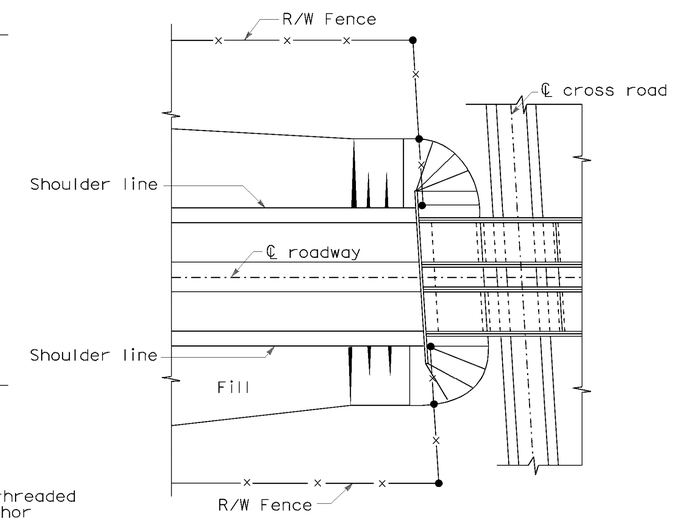

PLAN OF ROADWAY - OVERPASS

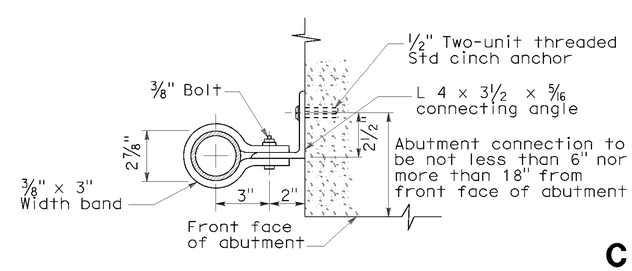

ABUTMENT CONNECTION

TYPICAL INSTALLATION AT BRIDGES

STATE OF CALIFORNIA
DEPARTMENT OF TRANSPORTATION

CHAIN LINK FENCE DETAILS

NO SCALE

NSP A85B DATED JUNE 5, 2009 SUPPLEMENTS THE STANDARD PLANS BOOK DATED MAY 2006.

NEW STANDARD PLAN NSP A85B

2006 NEW STANDARD PLAN NSP A85B

P:\proj1\02\3E760_plans\pse\addenda_1\23e760va294c.dgn

5-12-09