Dist	COUNTY	ROUTE	POST MILES TOTAL PROJECT	SHEET No.	TOTAL SHEETS
01	Men	128	30.1/48.5	1	52

INDEX OF PLANS

SHEET No.	DESCRIPTION
1	TITLE AND LOCATION MAP
2	LOCATIONS OF CONSTRUCTION
3-24	DRAINAGE PLAN AND PROFILES
25-29	DRAINAGE DETAILS
30-34	DRAINAGE QUANTITIES
35	CONSTRUCTION AREA SIGNS
36-37	SUMMARY OF QUANTITIES
38-41	EROSION CONTROL PLANS AND QUANTITIES
42-52	REVISED STANDARD PLANS

THE STANDARD PLANS LIST APPLICABLE TO THIS CONTRACT IS INCLUDED IN THE NOTICE TO BIDDERS AND SPECIAL PROVISIONS BOOK.

STATE OF CALIFORNIA

DEPARTMENT OF TRANSPORTATION

PROJECT PLANS FOR CONSTRUCTION ON

STATE HIGHWAY

IN MENDOCINO COUNTY NEAR BOONVILLE AT VARIOUS LOCATIONS FROM 0.5 MILE EAST OF ROUTE 253 TO MOUNTAIN HOUSE ROAD

TO BE SUPPLEMENTED BY STANDARD PLANS DATED 2010

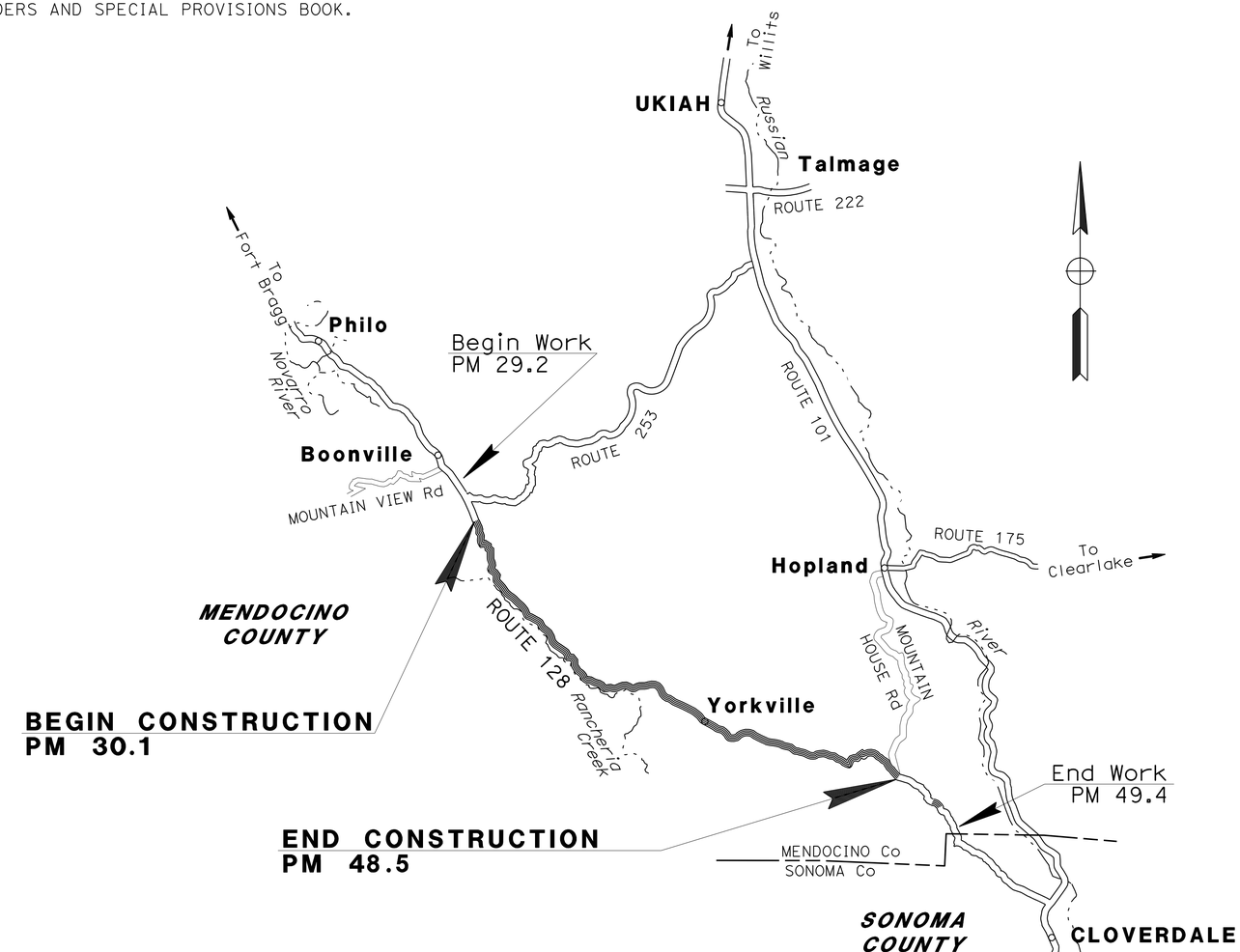

NO SCALE

NOTE:
THE TABLE OF LOCATIONS OF CONSTRUCTION IS SHOWN ON SHEET LC-1.

LOCATION MAP

PROJECT MANAGER: SEBASTIAN COHEN

DESIGN ENGINEER: SCOTT MANN

PROJECT ENGINEER REGISTERED CIVIL ENGINEER — DATE 4-25-16

April 25, 2016
PLANS APPROVAL DATE

REGISTERED PROFESSIONAL ENGINEER — KENNETH KEATON No. 45864 Exp. 12-31-16 CIVIL — STATE OF CALIFORNIA

THE STATE OF CALIFORNIA OR ITS OFFICERS OR AGENTS SHALL NOT BE RESPONSIBLE FOR THE ACCURACY OR COMPLETENESS OF SCANNED COPIES OF THIS PLAN SHEET.

CONTRACT No.	01-378134
PROJECT ID	0100000133

LAST REVISION 04-28-16 — DATE PLOTTED => 28-APR-2016 TIME PLOTTED => 18:47

THE CONTRACTOR SHALL POSSESS THE CLASS (OR CLASSES) OF LICENSE AS SPECIFIED IN THE "NOTICE TO BIDDERS."

Dist	COUNTY	ROUTE	POST MILES TOTAL PROJECT	SHEET No.	TOTAL SHEETS
01	Men	128	30.1/48.5	2	52

REGISTERED CIVIL ENGINEER 4-25-16 DATE

PLANS APPROVAL DATE 4-25-16

REGISTERED PROFESSIONAL ENGINEER KENNETH KEATON No. 45864 Exp. 12-31-16 CIVIL STATE OF CALIFORNIA

THE STATE OF CALIFORNIA OR ITS OFFICERS OR AGENTS SHALL NOT BE RESPONSIBLE FOR THE ACCURACY OR COMPLETENESS OF SCANNED COPIES OF THIS PLAN SHEET.

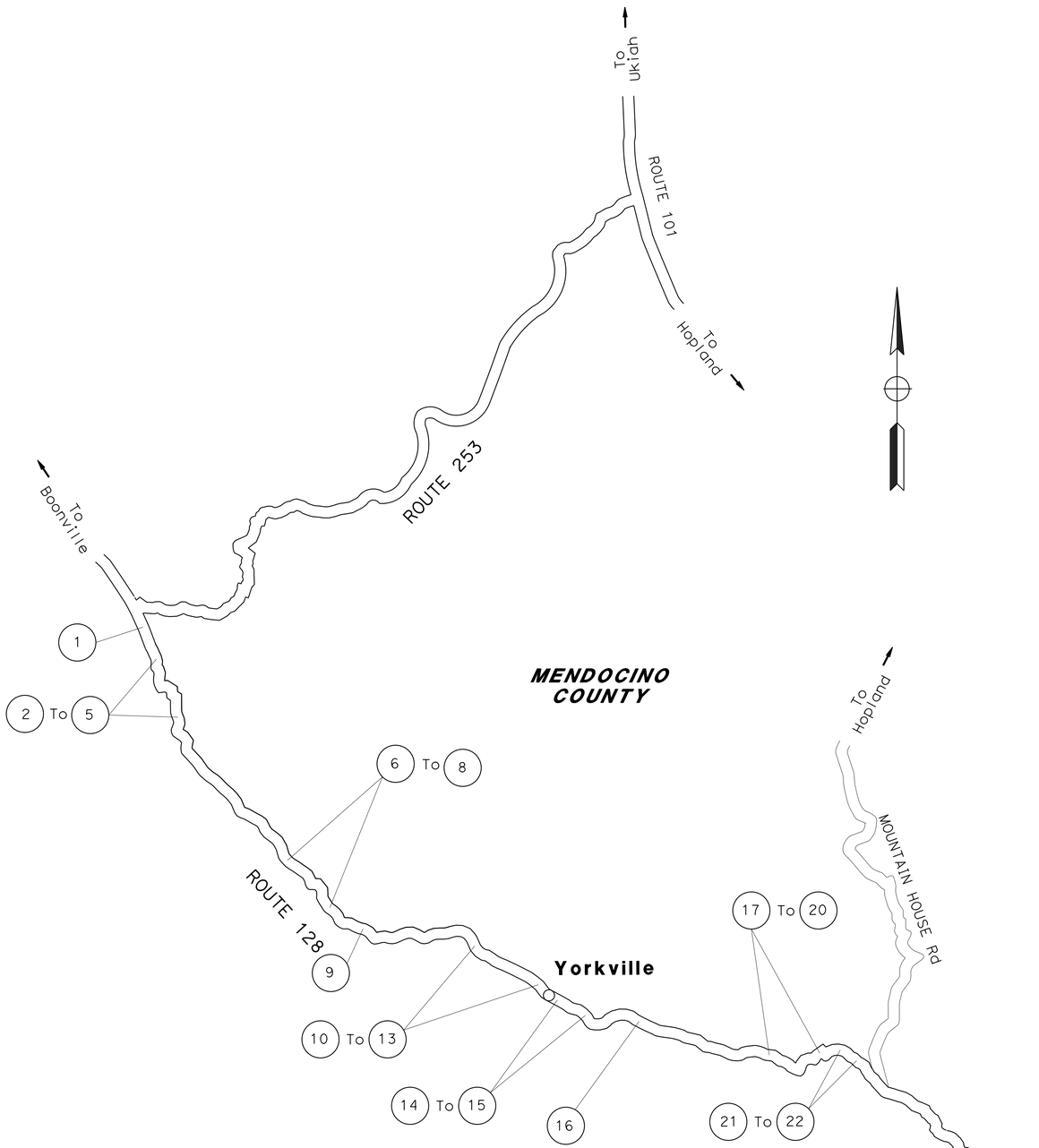

LOCATIONS OF CONSTRUCTION

Loc	COUNTY	ROUTE	PM
1	Men	128	30.14
2	Men	128	30.57
3	Men	128	31.03
4	Men	128	31.09
5	Men	128	31.26
6	Men	128	35.42
7	Men	128	35.48
8	Men	128	35.94
9	Men	128	38.77
10	Men	128	40.52
11	Men	128	40.75
12	Men	128	41.12
13	Men	128	41.35
14	Men	128	42.81
15	Men	128	43.16
16	Men	128	44.85
17	Men	128	46.66
18	Men	128	47.52
19	Men	128	47.71
20	Men	128	47.97
21	Men	128	48.30
22	Men	128	48.44

LOCATIONS OF CONSTRUCTION

NO SCALE

LC-1

STATE OF CALIFORNIA - DEPARTMENT OF TRANSPORTATION

Caltrans

03-DESIGN

FUNCTIONAL SUPERVISOR: SCOTT MANN

CALCULATED-DESIGNED BY: W. KEITH MACK

CHECKED BY: SARJU D. PATEL

REVISED BY

DATE REVISED

LAST REVISION 08-17-11

DATE PLOTTED => 28-APR-2016

TIME PLOTTED => 18:37

Dist	COUNTY	ROUTE	POST MILES TOTAL PROJECT	SHEET No.	TOTAL SHEETS
01	Men	128	30.1/48.5	3	52

REGISTERED CIVIL ENGINEER 4-25-16 DATE

PLANS APPROVAL DATE 4-25-16

REGISTERED PROFESSIONAL ENGINEER KENNETH KEATON No. 45864 Exp. 12-31-16 CIVIL STATE OF CALIFORNIA

THE STATE OF CALIFORNIA OR ITS OFFICERS OR AGENTS SHALL NOT BE RESPONSIBLE FOR THE ACCURACY OR COMPLETENESS OF SCANNED COPIES OF THIS PLAN SHEET.

T13N R14W MDB&M
SECTION 13

NOTES:

1. THIS PLAN IS ACCURATE FOR DRAINAGE WORK ONLY
2. FOR ACCURATE RIGHT OF WAY DATA, CONTACT RIGHT OF WAY ENGINEERING AT THE DISTRICT OFFICE.
3. FOR ROCK SLOPE PROTECTION, DETAILS SEE DRAINAGE DETAIL SHEETS.
4. THE ANGLE OF EACH ELBOW IS APPROXIMATE. THE EXACT ANGLE WILL BE DETERMINED IN THE FIELD BY THE ENGINEER.
5. DRAINAGE INLET SHALL BE SET TO PROFILE GRADE OF PAVEMENT.
6. FOR MINOR CONCRETE (BACKFILL) DETAILS SEE DRAINAGE DETAIL SHEET.
7. LOCATIONS OF UTILITY FACILITIES SHOWN ON THESE PLANS ARE APPROXIMATE AND SHALL BE VERIFIED BY THE CONTRACTOR PRIOR TO CONSTRUCTION.
8. UTILITY OWNERSHIP ON THIS PROJECT:
   ELECTRICAL - PACIFIC GAS & ELECTRIC (PG&E Elect)
   TELEPHONE - AMERICAN TELEPHONE & TELEGRAPH (AT&T Tel)
   FIBER OPTIC - AMERICAN TELEPHONE & TELEGRAPH (AT&T FO)
   - LEVEL 3 COMMUNICATIONS (L3 FO)
9. ALL UTILITY ELEVATIONS SHOWN REFER TO THE TOP OF THE UTILITY CONDUIT UNLESS OTHERWISE INDICATED.

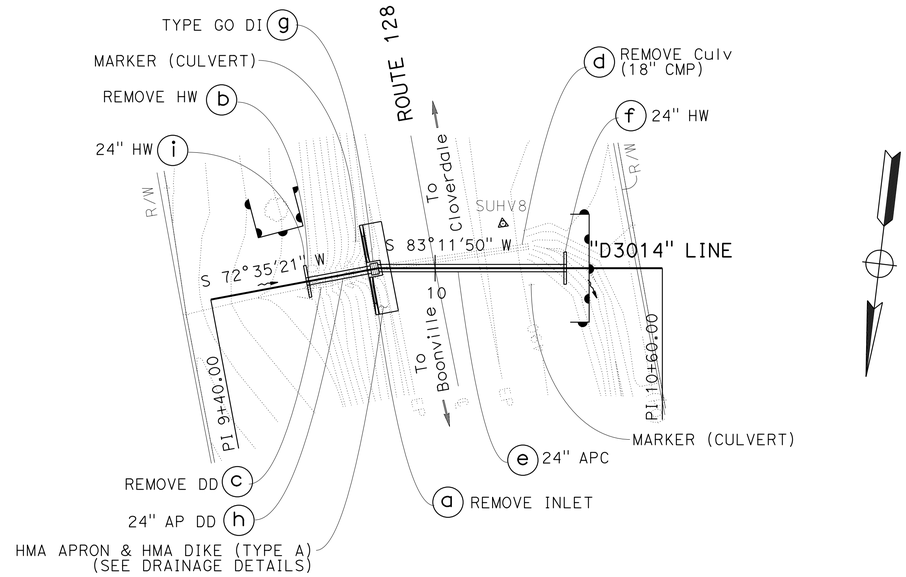

DRAINAGE SYSTEM No. (1)

ROUTE 128
PM 30.14

PLAN

SCALE: 1" = 20'

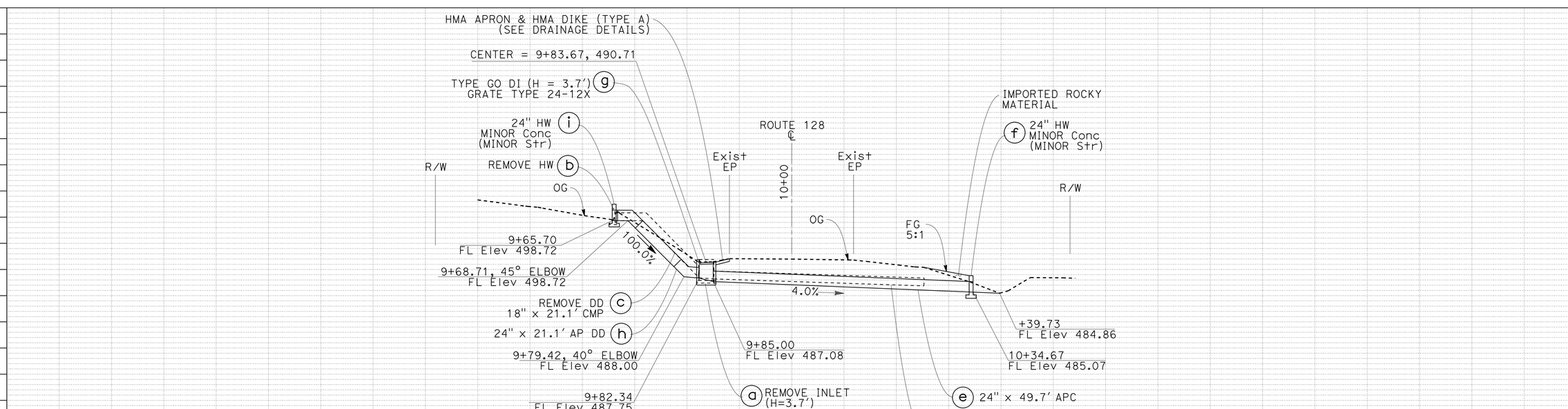

PROFILE

SCALE: 1" = 20'

LEGEND:

- (X) DRAINAGE SYSTEM No.
- (x) DRAINAGE UNIT
- ROCK SLOPE PROTECTION
- CONCRETED ROCK SLOPE PROTECTION
- Temp FENCE (TYPE ESA)
- MINOR CONCRETE (BACKFILL)
- ROADWAY EXCAVATION

DRAINAGE PLAN AND PROFILES

SCALE AS SHOWN

D-1

REVISED BY	DATE REVISED
WKM	09-30-11

CALCULATED-DESIGNED BY: W. KEITH MACK
CHECKED BY: LUZ VILLANUEVA
FUNCTIONAL SUPERVISOR: SCOTT MANN

STATE OF CALIFORNIA - DEPARTMENT OF TRANSPORTATION
03-DESIGN
Caltrans

LAST REVISION 09-30-11
DATE PLOTTED => 28-APR-2016
TIME PLOTTED => 18:37

Dist	COUNTY	ROUTE	POST MILES TOTAL PROJECT	SHEET No.	TOTAL SHEETS
01	Men	128	30.1/48.5	4	52

REGISTERED CIVIL ENGINEER 4-25-16 DATE

PLANS APPROVAL DATE 4-25-16

REGISTERED PROFESSIONAL ENGINEER KENNETH KEATON No. 45864 Exp. 12-31-16 CIVIL STATE OF CALIFORNIA

THE STATE OF CALIFORNIA OR ITS OFFICERS OR AGENTS SHALL NOT BE RESPONSIBLE FOR THE ACCURACY OR COMPLETENESS OF SCANNED COPIES OF THIS PLAN SHEET.

T13N R14W MDB&M
SECTION 13

NOTES:

1. THIS PLAN IS ACCURATE FOR DRAINAGE WORK ONLY
2. FOR ACCURATE RIGHT OF WAY DATA, CONTACT RIGHT OF WAY ENGINEERING AT THE DISTRICT OFFICE.

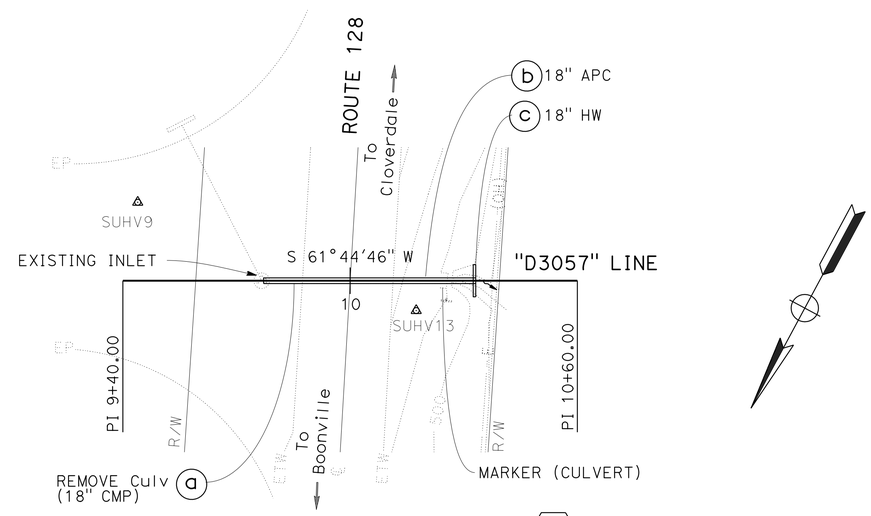

DRAINAGE SYSTEM No. 2

ROUTE 128
PM 30.57

PLAN

SCALE: 1" = 20'

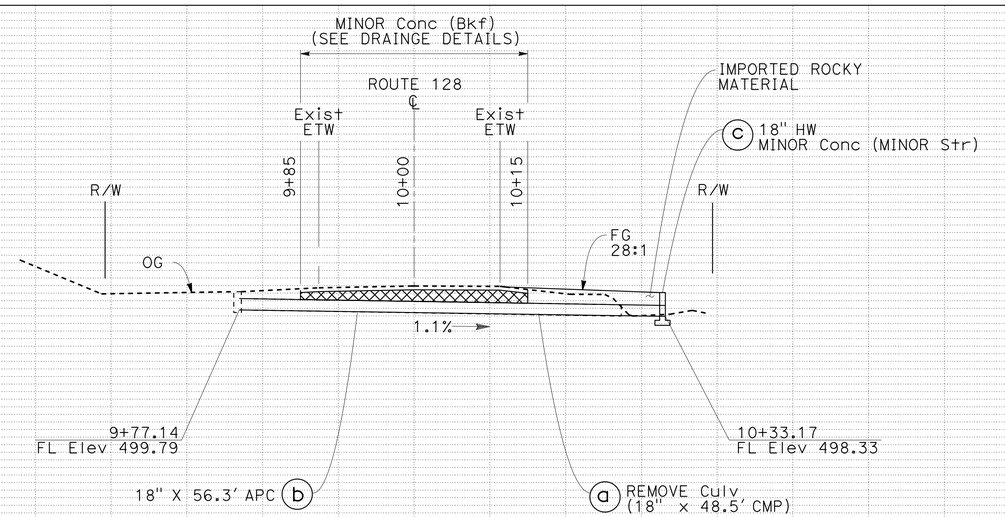

PROFILE

SCALE: 1" = 20'

DRAINAGE PLAN AND PROFILES

SCALE AS SHOWN

D-2

W. KEITH MACK	REVISED BY
LUZ VILLANUEVA	DATE REVISED
09-30-11	
CALCULATED-DESIGNED BY	
CHECKED BY	
FUNCTIONAL SUPERVISOR	
SCOTT MANN	

STATE OF CALIFORNIA - DEPARTMENT OF TRANSPORTATION
03-DESIGN
Caltrans

LAST REVISION 09-30-11
DATE PLOTTED => 28-APR-2016
TIME PLOTTED => 18:37

Dist	COUNTY	ROUTE	POST MILES TOTAL PROJECT	SHEET No.	TOTAL SHEETS
01	Men	128	30.1/48.5	5	52

REGISTERED CIVIL ENGINEER 4-25-16 DATE

4-25-16
PLANS APPROVAL DATE

REGISTERED PROFESSIONAL ENGINEER KENNETH KEATON No. 45864 Exp. 12-31-16 CIVIL STATE OF CALIFORNIA

THE STATE OF CALIFORNIA OR ITS OFFICERS OR AGENTS SHALL NOT BE RESPONSIBLE FOR THE ACCURACY OR COMPLETENESS OF SCANNED COPIES OF THIS PLAN SHEET.

NOTES:

1. THIS PLAN IS ACCURATE FOR DRAINAGE WORK ONLY
2. FOR ACCURATE RIGHT OF WAY DATA, CONTACT RIGHT OF WAY ENGINEERING AT THE DISTRICT OFFICE.
3. FOR ROCK SLOPE PROTECTION DETAILS SEE DRAINAGE DETAIL SHEETS.
4. THE ANGLE OF EACH ELBOW IS APPROXIMATE. THE EXACT ANGLE WILL BE DETERMINED IN THE FIELD BY THE ENGINEER.

T13N R14W MDB&M
SECTION 13

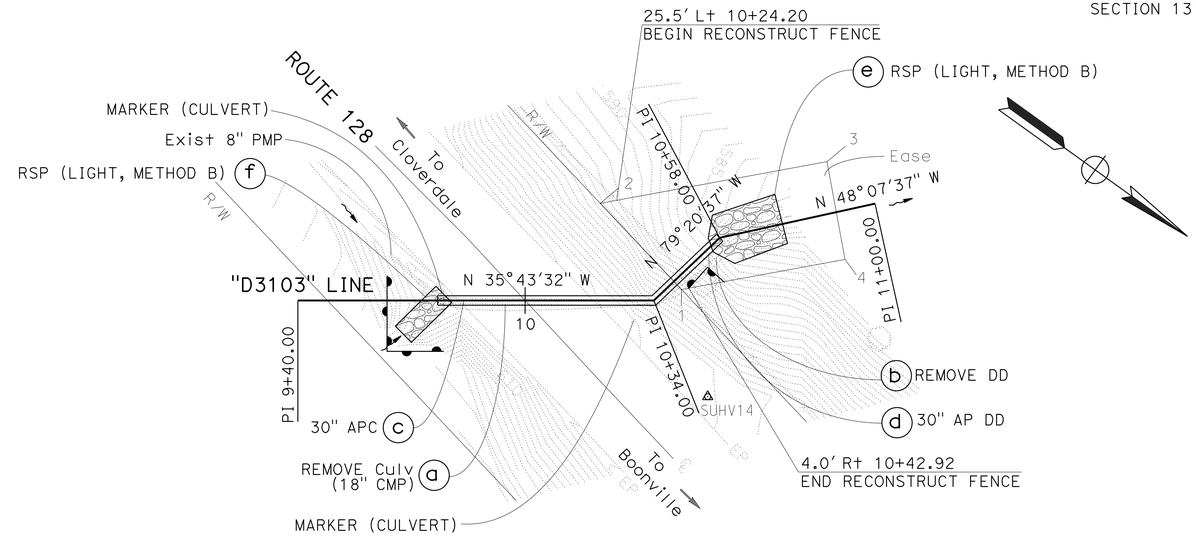

POINT	STATION	OFFSET
1	10+41.28	2.92' Rt
2	10+19.83	25.65' Lt
3	10+89.99	13.55' Lt
4	10+89.09	12.68' Rt

DRAINAGE SYSTEM No. 3

ROUTE 128
PM 31.03

PLAN

SCALE: 1" = 20'

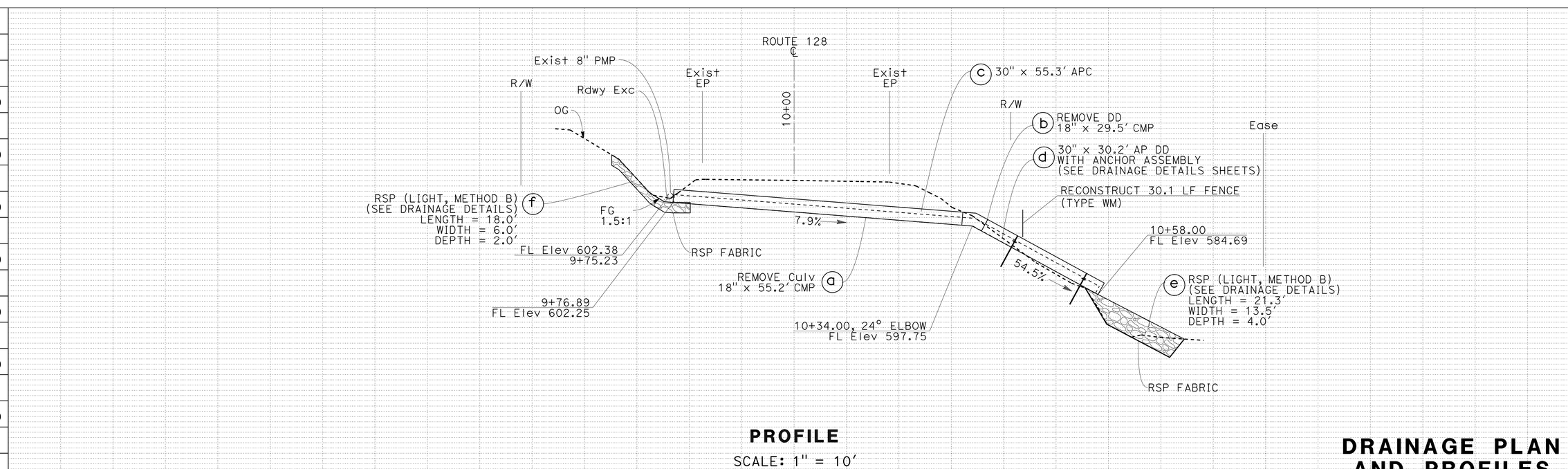

PROFILE

SCALE: 1" = 20'

DRAINAGE PLAN AND PROFILES

SCALE AS SHOWN

D-3

REVISED BY	GRD
DATE REVISED	23 Mar 16
CALCULATED-DESIGNED BY	W. KEITH MACK
CHECKED BY	LUZ VILLANUEVA
FUNCTIONAL SUPERVISOR	SCOTT MANN

STATE OF CALIFORNIA - DEPARTMENT OF TRANSPORTATION
Caltrans
03-DESIGN

LAST REVISION 09-30-11
DATE PLOTTED => 28-APR-2016
TIME PLOTTED => 18:37

Dist	COUNTY	ROUTE	POST MILES TOTAL PROJECT	SHEET No.	TOTAL SHEETS
01	Men	128	30.1/48.5	6	52

REGISTERED CIVIL ENGINEER 4-25-16 DATE

4-25-16
PLANS APPROVAL DATE

REGISTERED PROFESSIONAL ENGINEER KENNETH KEATON No. 45864 Exp. 12-31-16 CIVIL STATE OF CALIFORNIA

THE STATE OF CALIFORNIA OR ITS OFFICERS OR AGENTS SHALL NOT BE RESPONSIBLE FOR THE ACCURACY OR COMPLETENESS OF SCANNED COPIES OF THIS PLAN SHEET.

T13N R14W MDB&M
SECTION 13

NOTES:

1. THIS PLAN IS ACCURATE FOR DRAINAGE WORK ONLY
2. FOR ACCURATE RIGHT OF WAY DATA, CONTACT RIGHT OF WAY ENGINEERING AT THE DISTRICT OFFICE.

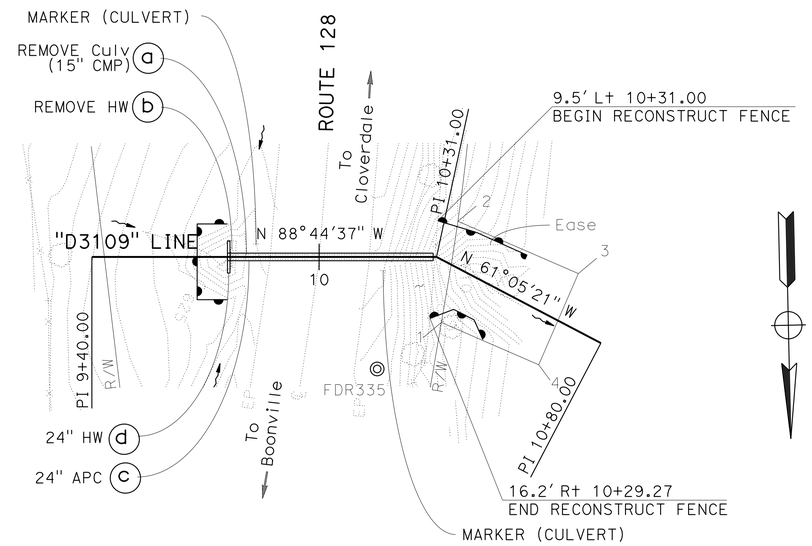

POINT	STATION	OFFSET
1	10+42.11	14.73' Rt
2	10+31.89	10.96' Lt
3	10+66.20	13.49' Lt
4	10+68.11	12.69' Rt

DRAINAGE SYSTEM No. 4

ROUTE 128
PM 31.09

PLAN

SCALE: 1" = 20'

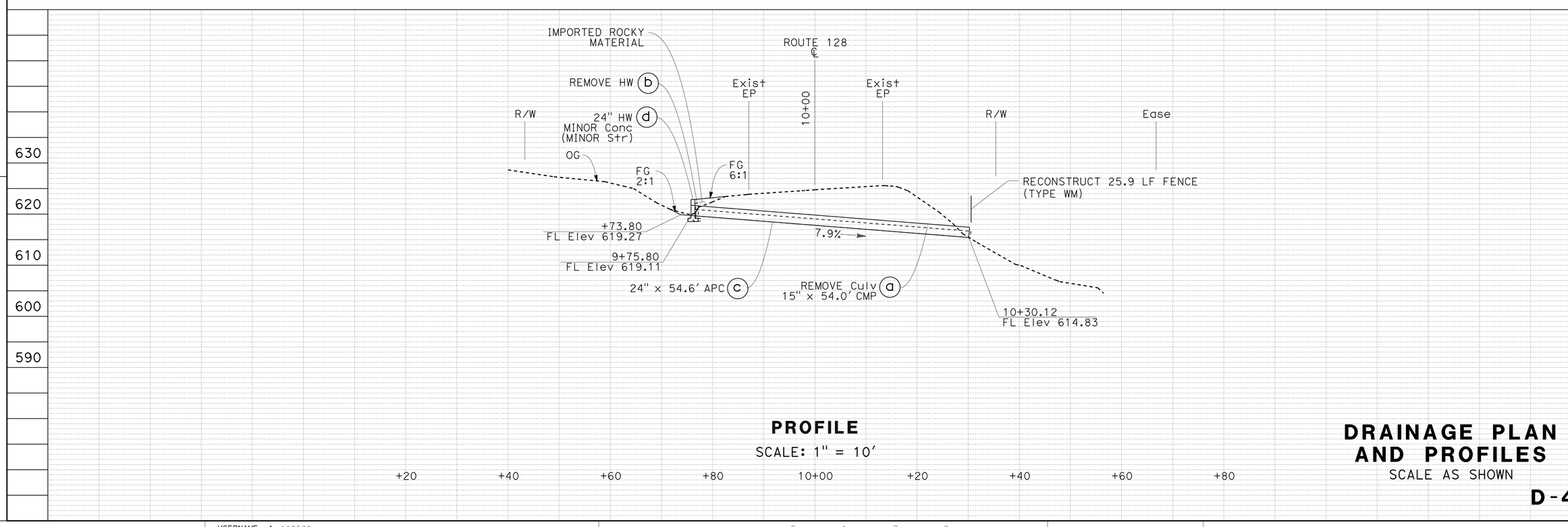

PROFILE

SCALE: 1" = 10'

DRAINAGE PLAN AND PROFILES

SCALE AS SHOWN

D-4

STATE OF CALIFORNIA - DEPARTMENT OF TRANSPORTATION
Caltrans
03-DESIGN

FUNCTIONAL SUPERVISOR: SCOTT MANN
CALCULATED-DESIGNED BY: W. KEITH MACK
CHECKED BY: LUZ VILLANUEVA
REVISED BY: WKM
DATE REVISED: 09-30-11

LAST REVISION 09-30-11
DATE PLOTTED => 28-APR-2016
TIME PLOTTED => 18:37

Dist	COUNTY	ROUTE	POST MILES TOTAL PROJECT	SHEET No.	TOTAL SHEETS
01	Men	128	30.1/48.5	7	52

REGISTERED CIVIL ENGINEER 4-25-16 DATE

4-25-16
PLANS APPROVAL DATE

REGISTERED PROFESSIONAL ENGINEER KENNETH KEATON No. 45864 Exp. 12-31-16 CIVIL STATE OF CALIFORNIA

THE STATE OF CALIFORNIA OR ITS OFFICERS OR AGENTS SHALL NOT BE RESPONSIBLE FOR THE ACCURACY OR COMPLETENESS OF SCANNED COPIES OF THIS PLAN SHEET.

T13N R14W MDB&M
SECTION 24

NOTES:

1. THIS PLAN IS ACCURATE FOR DRAINAGE WORK ONLY
2. FOR ACCURATE RIGHT OF WAY DATA, CONTACT RIGHT OF WAY ENGINEERING AT THE DISTRICT OFFICE.
3. FOR ROCK SLOPE PROTECTION DETAILS SEE DRAINAGE DETAIL SHEETS.
4. THE ANGLE OF EACH ELBOW IS APPROXIMATE. THE EXACT ANGLE WILL BE DETERMINED IN THE FIELD BY THE ENGINEER.
5. HW SKEW ANGLE IS MEASURED FROM A LINE PERPENDICULAR TO THE CULVERT ALIGNMENT.

POINT	STATION	OFFSET
1	9+35.92	42.86′ R+
2	9+35.92	35.88′ L+
3	9+74.18	35.88′ L+
4	9+51.83	42.87′ R+

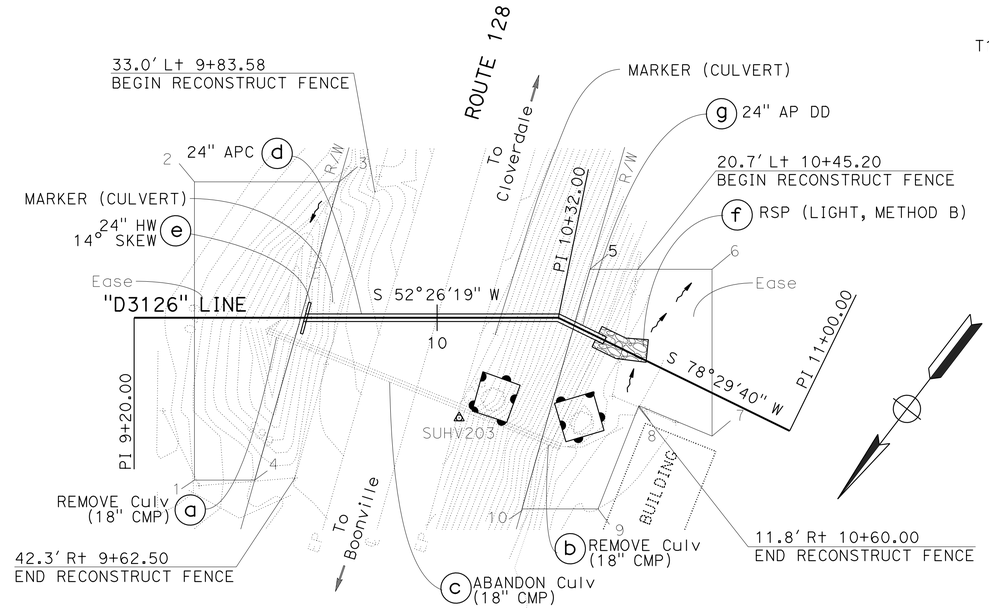

DRAINAGE SYSTEM No. 5

ROUTE 128
PM 31.26

PLAN

SCALE: 1" = 20′

POINT	STATION	OFFSET
5	10+33.90	15.17′ L+
6	10+62.84	29.32′ L+
7	10+82.19	10.24′ R+
8	10+61.30	11.51′ R+
9	10+63.60	40.73′ R+
10	10+45.55	49.55′ R+

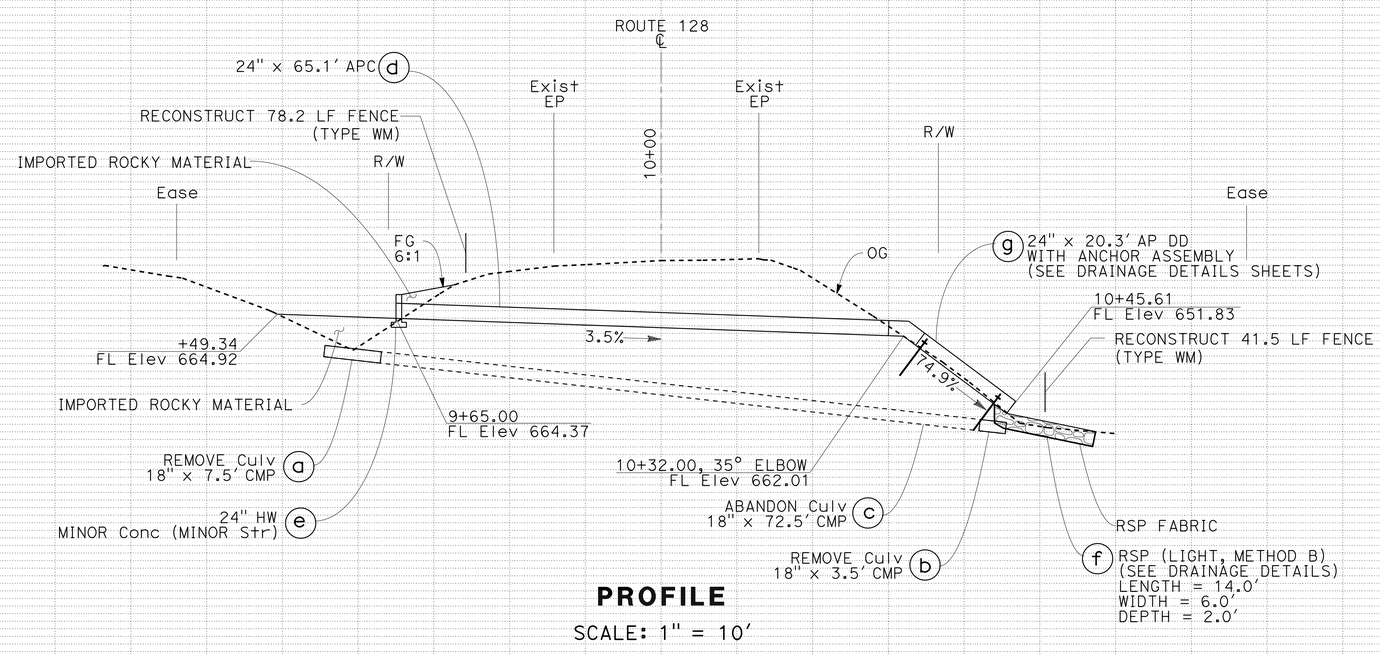

PROFILE

SCALE: 1" = 20′

DRAINAGE PLAN AND PROFILES

SCALE AS SHOWN

D-5

REVISED BY	DATE REVISED
WKM	09-30-11

CALCULATED-DESIGNED BY: W. KEITH MACK
CHECKED BY: LUZ VILLANUEVA
FUNCTIONAL SUPERVISOR: SCOTT MANN

STATE OF CALIFORNIA - DEPARTMENT OF TRANSPORTATION
03-DESIGN
Caltrans

LAST REVISION 09-30-11
DATE PLOTTED => 28-APR-2016
TIME PLOTTED => 18:37

Dist	COUNTY	ROUTE	POST MILES TOTAL PROJECT	SHEET No.	TOTAL SHEETS
01	Men	128	30.1/48.5	8	52

REGISTERED CIVIL ENGINEER 4-25-16 DATE

4-25-16
PLANS APPROVAL DATE

REGISTERED PROFESSIONAL ENGINEER KENNETH KEATON No. 45864 Exp. 12-31-16 CIVIL STATE OF CALIFORNIA

THE STATE OF CALIFORNIA OR ITS OFFICERS OR AGENTS SHALL NOT BE RESPONSIBLE FOR THE ACCURACY OR COMPLETENESS OF SCANNED COPIES OF THIS PLAN SHEET.

NOTES:

1. THIS PLAN IS ACCURATE FOR DRAINAGE WORK ONLY
2. FOR ACCURATE RIGHT OF WAY DATA, CONTACT RIGHT OF WAY ENGINEERING AT THE DISTRICT OFFICE.
3. DRAINAGE INLET SHALL BE SET TO PROFILE GRADE OF PAVEMENT.

T12N R13W MDB&M
SECTION 4

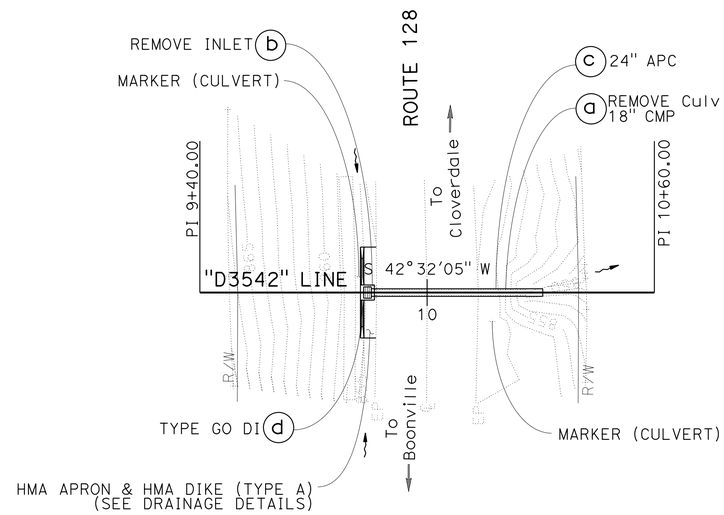

DRAINAGE SYSTEM No. 6

ROUTE 128
PM 35.42

PLAN

SCALE: 1" = 20'

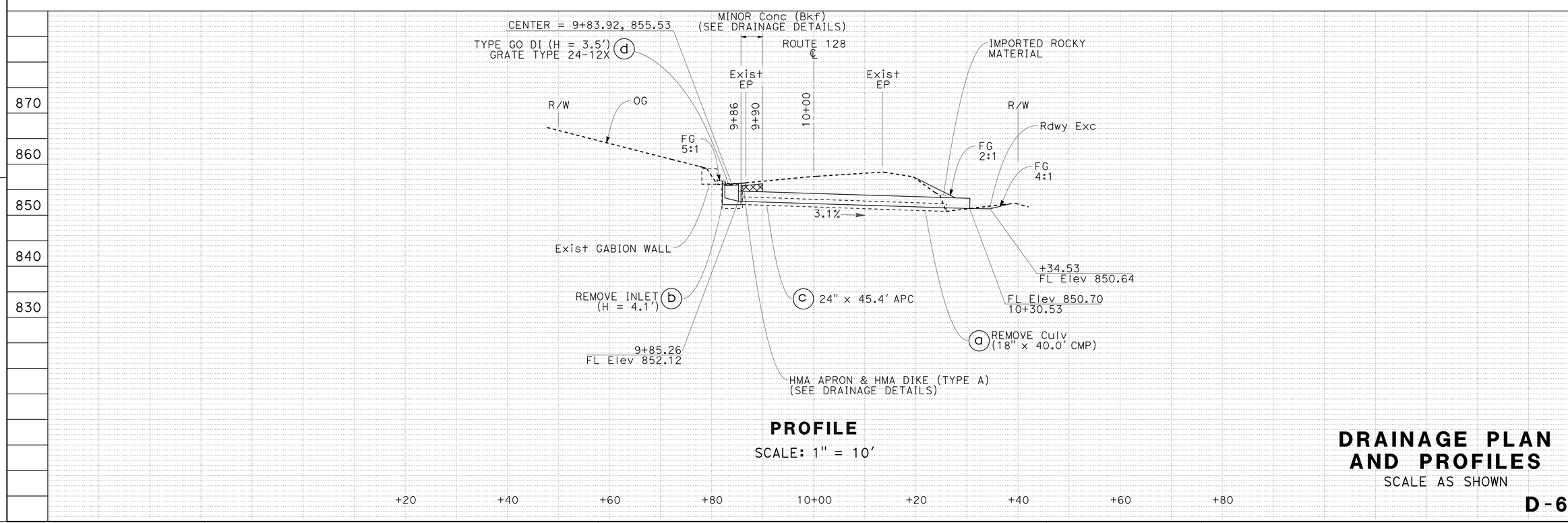

PROFILE

SCALE: 1" = 20'

DRAINAGE PLAN AND PROFILES

SCALE AS SHOWN

D-6

REVISED BY	WKM
DATE REVISED	09-30-11
W. KEITH MACK	
LUZ VILLANUEVA	
CALCULATED-DESIGNED BY	
CHECKED BY	
FUNCTIONAL SUPERVISOR	SCOTT MANN

STATE OF CALIFORNIA - DEPARTMENT OF TRANSPORTATION
Caltrans
03-DESIGN

LAST REVISION 09-30-11
DATE PLOTTED => 28-APR-2016
TIME PLOTTED => 18:37

Dist	COUNTY	ROUTE	POST MILES TOTAL PROJECT	SHEET No.	TOTAL SHEETS
01	Men	128	30.1/48.5	9	52

REGISTERED CIVIL ENGINEER 4-25-16 DATE

4-25-16
PLANS APPROVAL DATE

REGISTERED PROFESSIONAL ENGINEER KENNETH KEATON No. 45864 Exp. 12-31-16 CIVIL STATE OF CALIFORNIA

THE STATE OF CALIFORNIA OR ITS OFFICERS OR AGENTS SHALL NOT BE RESPONSIBLE FOR THE ACCURACY OR COMPLETENESS OF SCANNED COPIES OF THIS PLAN SHEET.

T12N R13W MDB&M
SECTION 4

NOTES:

1. THIS PLAN IS ACCURATE FOR DRAINAGE WORK ONLY
2. FOR ACCURATE RIGHT OF WAY DATA, CONTACT RIGHT OF WAY ENGINEERING AT THE DISTRICT OFFICE.
3. DRAINAGE INLET SHALL BE SET TO PROFILE GRADE OF PAVEMENT.

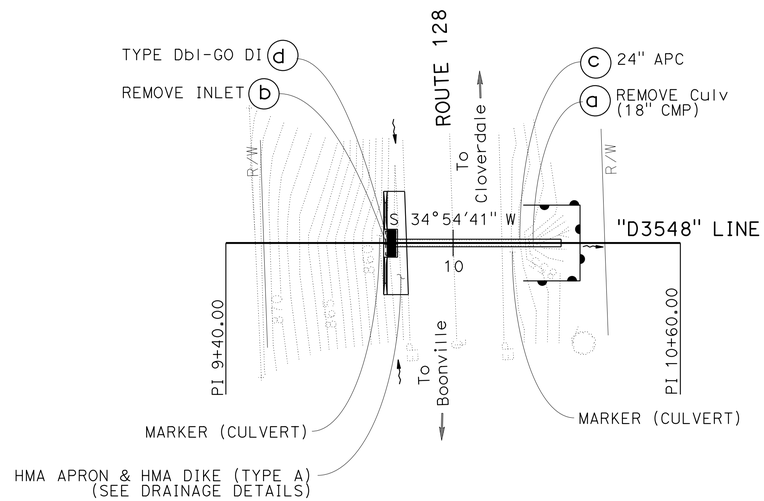

DRAINAGE SYSTEM No. 7

ROUTE 128
PM 35.48

PLAN

SCALE: 1" = 20'

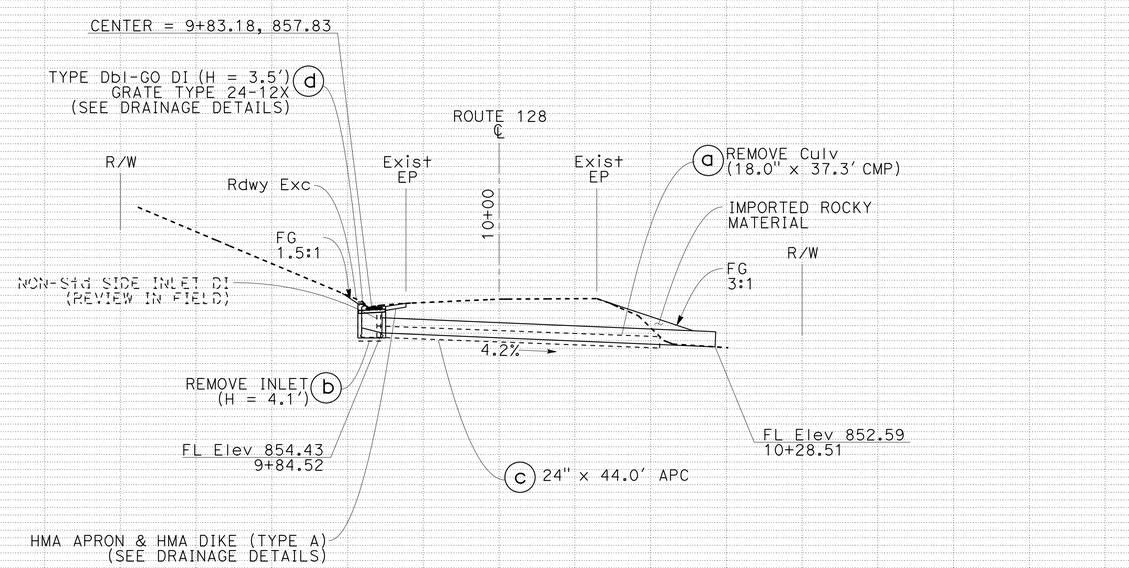

PROFILE

SCALE: 1" = 20'

DRAINAGE PLAN AND PROFILES

SCALE AS SHOWN

D-7

STATE OF CALIFORNIA - DEPARTMENT OF TRANSPORTATION
Caltrans
03-DESIGN

FUNCTIONAL SUPERVISOR: SCOTT MANN
CALCULATED-DESIGNED BY: W. KEITH MACK
CHECKED BY: LUZ VILLANUEVA
REVISED BY: WKM
DATE REVISED: 09-30-11

LAST REVISION 09-30-11
DATE PLOTTED => 28-APR-2016
TIME PLOTTED => 18:37

Dist	COUNTY	ROUTE	POST MILES TOTAL PROJECT	SHEET No.	TOTAL SHEETS
01	Men	128	30.1/48.5	10	52

REGISTERED CIVIL ENGINEER 4-25-16 DATE

4-25-16
PLANS APPROVAL DATE

REGISTERED PROFESSIONAL ENGINEER KENNETH KEATON No. 45864 Exp. 12-31-16 CIVIL STATE OF CALIFORNIA

THE STATE OF CALIFORNIA OR ITS OFFICERS OR AGENTS SHALL NOT BE RESPONSIBLE FOR THE ACCURACY OR COMPLETENESS OF SCANNED COPIES OF THIS PLAN SHEET.

T12N R13W MDB&M
SECTION 3

NOTES:

1. THIS PLAN IS ACCURATE FOR DRAINAGE WORK ONLY
2. FOR ACCURATE RIGHT OF WAY DATA, CONTACT RIGHT OF WAY ENGINEERING AT THE DISTRICT OFFICE.

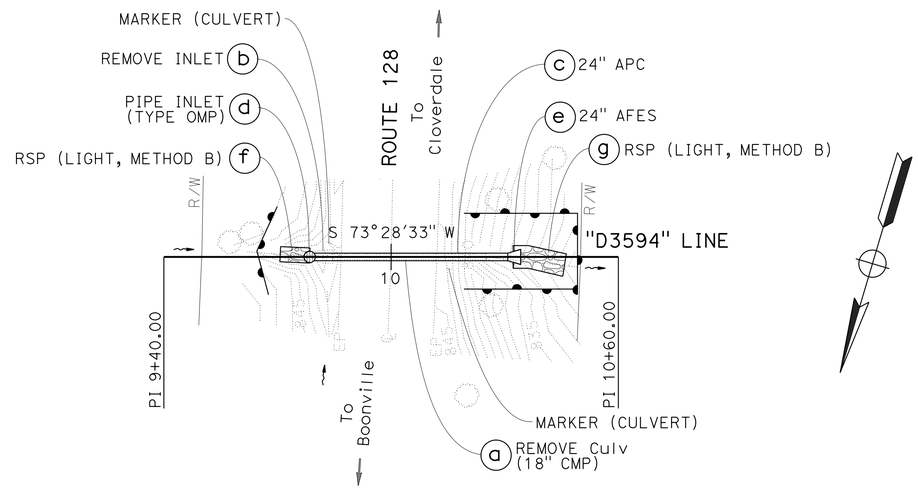

DRAINAGE SYSTEM No. 8

ROUTE 128
PM 35.94

PLAN

SCALE: 1" = 20'

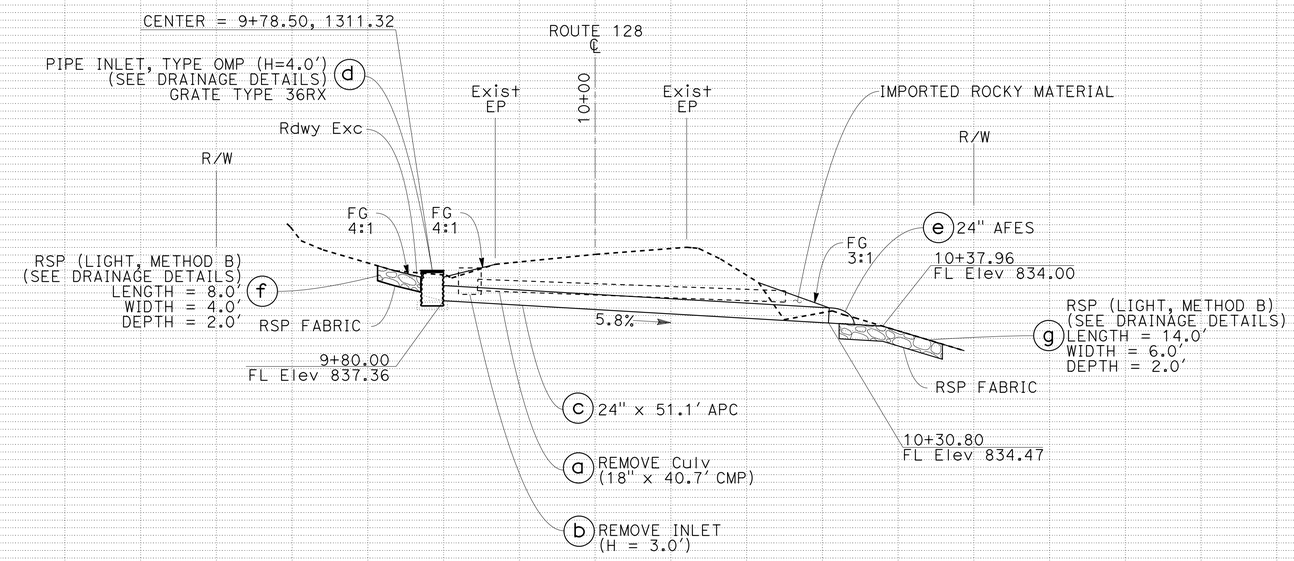

PROFILE

SCALE: 1" = 10'

DRAINAGE PLAN AND PROFILES

SCALE AS SHOWN

D-8

GRD	29 Mar 16	W. KEITH MACK	LUZ VILLANUEVA
WKM	09-30-11	REVISED BY	DATE REVISED
CALCULATED-DESIGNED BY		CHECKED BY	
FUNCTIONAL SUPERVISOR	SCOTT MANN		

STATE OF CALIFORNIA - DEPARTMENT OF TRANSPORTATION
03-DESIGN
Caltrans

LAST REVISION 09-30-11 | DATE PLOTTED => 28-APR-2016 | TIME PLOTTED => 18:37

Dist	COUNTY	ROUTE	POST MILES TOTAL PROJECT	SHEET No.	TOTAL SHEETS
01	Men	128	30.1/48.5	11	52

REGISTERED CIVIL ENGINEER 4-25-16 DATE

PLANS APPROVAL DATE 4-25-16

REGISTERED PROFESSIONAL ENGINEER KENNETH KEATON No. 45864 Exp. 12-31-16 CIVIL STATE OF CALIFORNIA

THE STATE OF CALIFORNIA OR ITS OFFICERS OR AGENTS SHALL NOT BE RESPONSIBLE FOR THE ACCURACY OR COMPLETENESS OF SCANNED COPIES OF THIS PLAN SHEET.

T12N R13W MDB&M
SECTION 1

NOTES:

1. THIS PLAN IS ACCURATE FOR DRAINAGE WORK ONLY
2. FOR ACCURATE RIGHT OF WAY DATA, CONTACT RIGHT OF WAY ENGINEERING AT THE DISTRICT OFFICE.
3. EXACT PLACEMENT OF CONCRETED ROCK SLOPE PROTECTION TO BE DETERMINED IN THE FIELD BY THE ENGINEER.
4. DRAINAGE INLET SHALL BE SET TO PROFILE GRADE OF PAVEMENT.

POINT	STATION	OFFSET
1	9+79.51	3.49′ Rt
2	9+69.54	9.46′ Lt
3	9+71.17	11.29′ Lt
4	9+79.51	6.01′ Lt

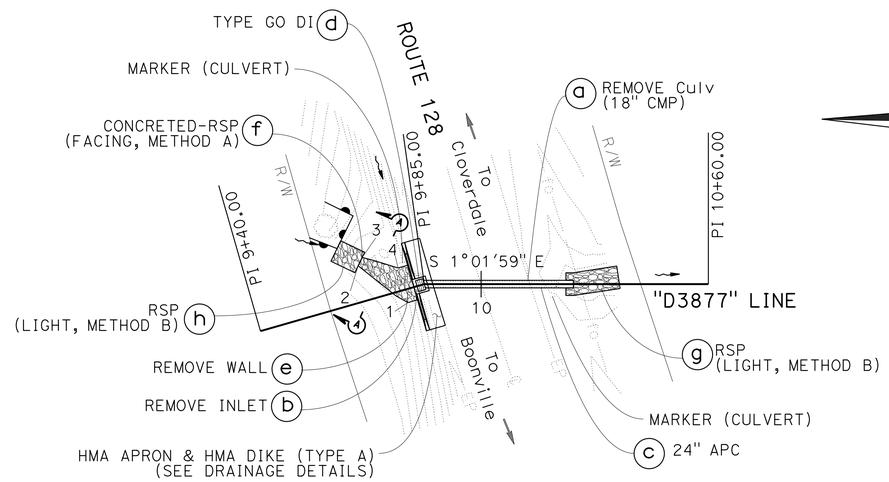

DRAINAGE SYSTEM No. 9

ROUTE 128
PM 38.77

PLAN

SCALE: 1" = 20′

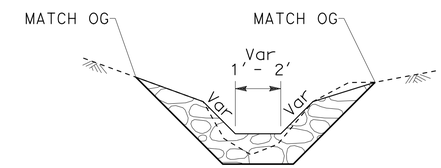

SECTION A-A

CONCRETED-RSP (FACING, METHOD A)

NO SCALE

NOTE:
GRADUALLY TRANSITION CONCRETED RSP FROM TRAPEZOIDAL SHAPE AT SECTION A-A TO BE FLUSH WITH TOP OF DIKE

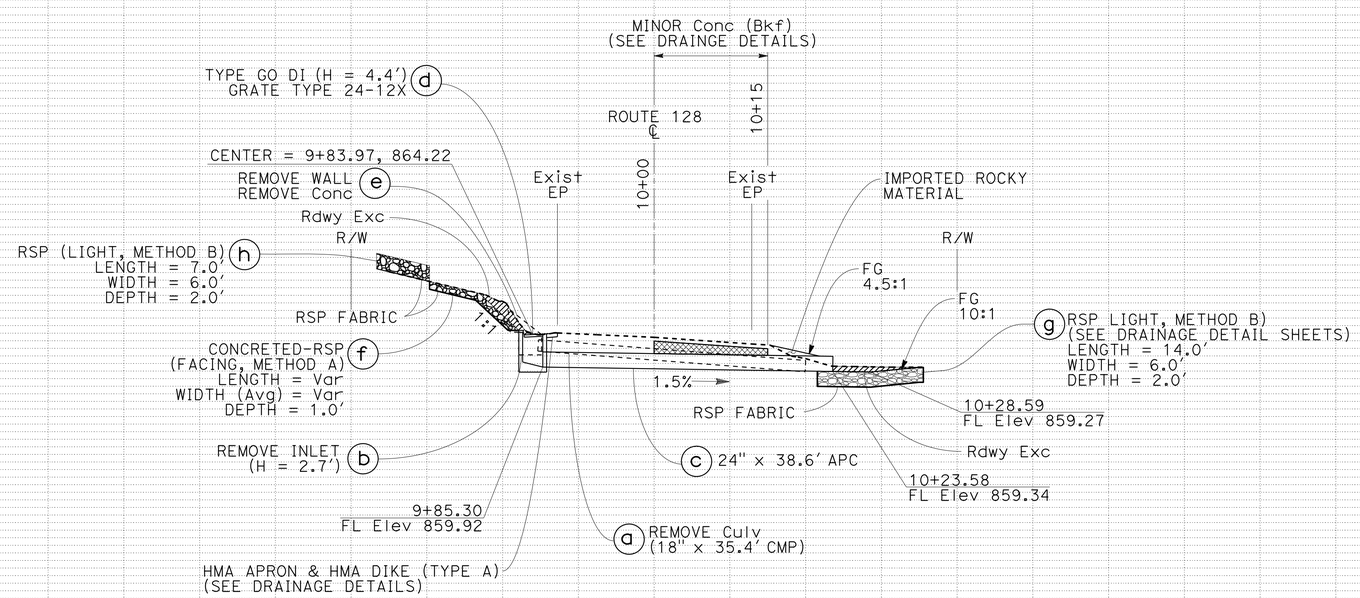

PROFILE

SCALE: 1" = 10′

DRAINAGE PLAN AND PROFILES

SCALE AS SHOWN

D-9

STATE OF CALIFORNIA - DEPARTMENT OF TRANSPORTATION
Caltrans
03-DESIGN

FUNCTIONAL SUPERVISOR: SCOTT MANN
CALCULATED-DESIGNED BY: W. KEITH MACK
CHECKED BY: LUZ VILLANUEVA
REVISED BY: WKM
DATE REVISED: 09-30-11

LAST REVISION 09-30-11
DATE PLOTTED => 28-APR-2016
TIME PLOTTED => 18:37

Dist	COUNTY	ROUTE	POST MILES TOTAL PROJECT	SHEET No.	TOTAL SHEETS
01	Men	128	30.1/48.5	12	52

REGISTERED CIVIL ENGINEER 4-25-16 DATE

4-25-16
PLANS APPROVAL DATE

REGISTERED PROFESSIONAL ENGINEER KENNETH KEATON No. 45864 Exp. 12-31-16 CIVIL STATE OF CALIFORNIA

THE STATE OF CALIFORNIA OR ITS OFFICERS OR AGENTS SHALL NOT BE RESPONSIBLE FOR THE ACCURACY OR COMPLETENESS OF SCANNED COPIES OF THIS PLAN SHEET.

T12N R12W MDB&M
SECTION 8

NOTES:

1. THIS PLAN IS ACCURATE FOR DRAINAGE WORK ONLY
2. FOR ACCURATE RIGHT OF WAY DATA, CONTACT RIGHT OF WAY ENGINEERING AT THE DISTRICT OFFICE.

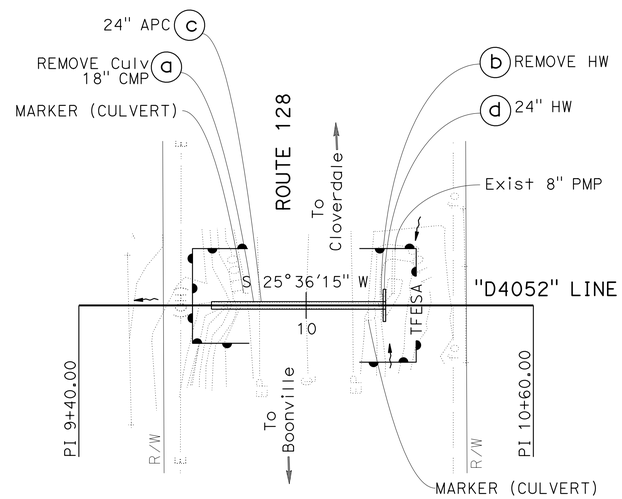

DRAINAGE SYSTEM No. 10

ROUTE 128
PM 40.52

PLAN

SCALE: 1" = 20'

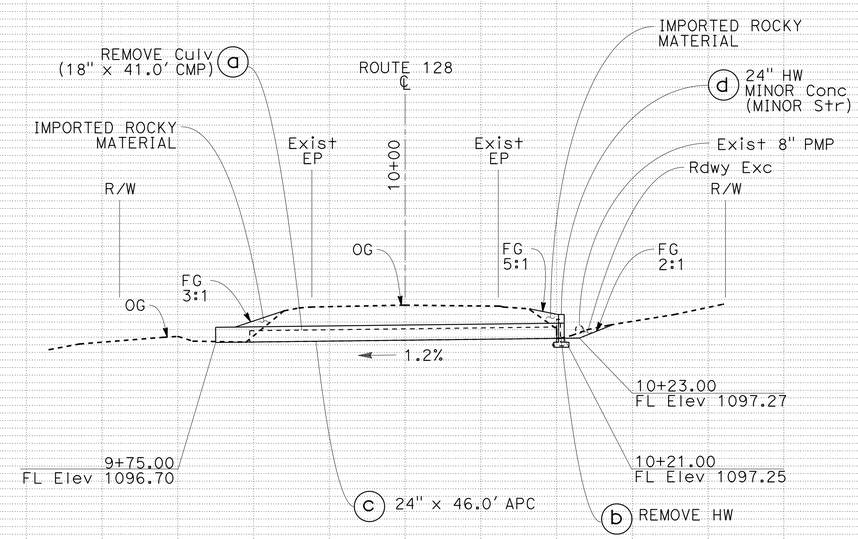

PROFILE

SCALE: 1" = 20'

DRAINAGE PLAN AND PROFILES

SCALE AS SHOWN

D-10

REVISED BY	DATE REVISED
WKM	09-30-11

CALCULATED-DESIGNED BY: W. KEITH MACK
CHECKED BY: LUZ VILLANUEVA
FUNCTIONAL SUPERVISOR: SCOTT MANN

STATE OF CALIFORNIA - DEPARTMENT OF TRANSPORTATION
Caltrans
03-DESIGN

LAST REVISION 09-30-11
DATE PLOTTED => 28-APR-2016
TIME PLOTTED => 18:37

Dist	COUNTY	ROUTE	POST MILES TOTAL PROJECT	SHEET No.	TOTAL SHEETS
01	Men	128	30.1/48.5	13	52

REGISTERED CIVIL ENGINEER 4-25-16 DATE

4-25-16
PLANS APPROVAL DATE

REGISTERED PROFESSIONAL ENGINEER KENNETH KEATON No. 45864 Exp. 12-31-16 CIVIL STATE OF CALIFORNIA

THE STATE OF CALIFORNIA OR ITS OFFICERS OR AGENTS SHALL NOT BE RESPONSIBLE FOR THE ACCURACY OR COMPLETENESS OF SCANNED COPIES OF THIS PLAN SHEET.

T12N R12W MDB&M
SECTION 8

NOTES:

1. THIS PLAN IS ACCURATE FOR DRAINAGE WORK ONLY
2. FOR ACCURATE RIGHT OF WAY DATA, CONTACT RIGHT OF WAY ENGINEERING AT THE DISTRICT OFFICE.

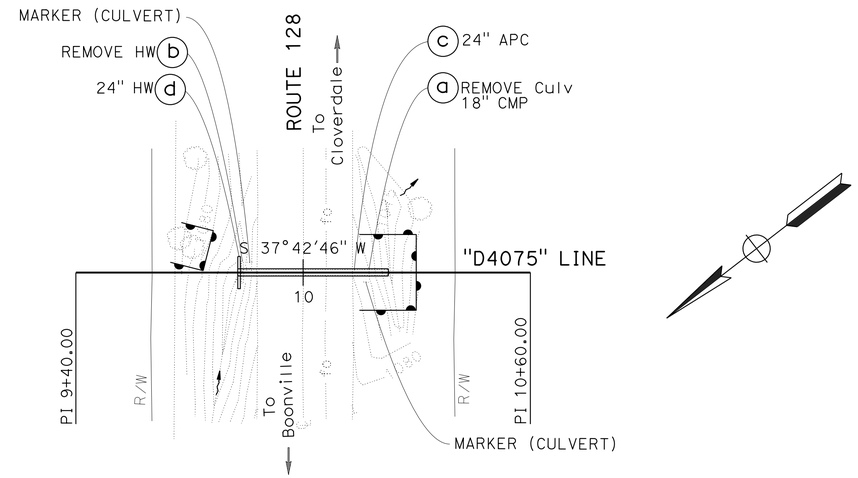

DRAINAGE SYSTEM No. 11

ROUTE 128
PM 40.75

PLAN

SCALE: 1" = 20'

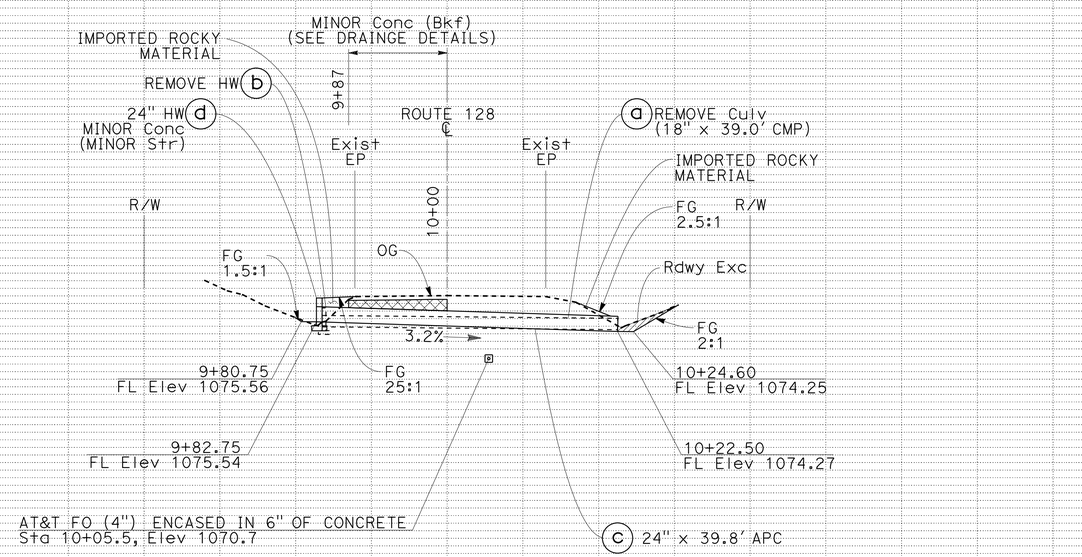

PROFILE

SCALE: 1"=10'

DRAINAGE PLAN AND PROFILES

SCALE AS SHOWN

D-11

STATE OF CALIFORNIA - DEPARTMENT OF TRANSPORTATION
Caltrans 03-DESIGN

FUNCTIONAL SUPERVISOR: SCOTT MANN
CALCULATED-DESIGNED BY: W. KEITH MACK
CHECKED BY: LUZ VILLANUEVA
REVISED BY: WKM
DATE REVISED: 09-30-11

LAST REVISION 09-30-11
DATE PLOTTED => 28-APR-2016
TIME PLOTTED => 18:37

Dist	COUNTY	ROUTE	POST MILES TOTAL PROJECT	SHEET No.	TOTAL SHEETS
01	Men	128	30.1/48.5	14	52

REGISTERED CIVIL ENGINEER 4-25-16 DATE

4-25-16
PLANS APPROVAL DATE

REGISTERED PROFESSIONAL ENGINEER KENNETH KEATON No. 45864 Exp. 12-31-16 CIVIL STATE OF CALIFORNIA

THE STATE OF CALIFORNIA OR ITS OFFICERS OR AGENTS SHALL NOT BE RESPONSIBLE FOR THE ACCURACY OR COMPLETENESS OF SCANNED COPIES OF THIS PLAN SHEET.

T12N R12W MDB&M
SECTION 8

NOTES:

1. THIS PLAN IS ACCURATE FOR DRAINAGE WORK ONLY
2. FOR ACCURATE RIGHT OF WAY DATA, CONTACT RIGHT OF WAY ENGINEERING AT DISTRICT OFFICE.
3. ALIGNMENT OF ROCK LINED DITCH IS APPROXIMATE. THE EXACT PLACEMENT WILL BE DETERMINED IN FIELD BY THE ENGINEER.
4. HW SKEW ANGLE IS MEASURED FROM A LINE PERPENDICULAR TO THE CULVERT ALIGNMENT.

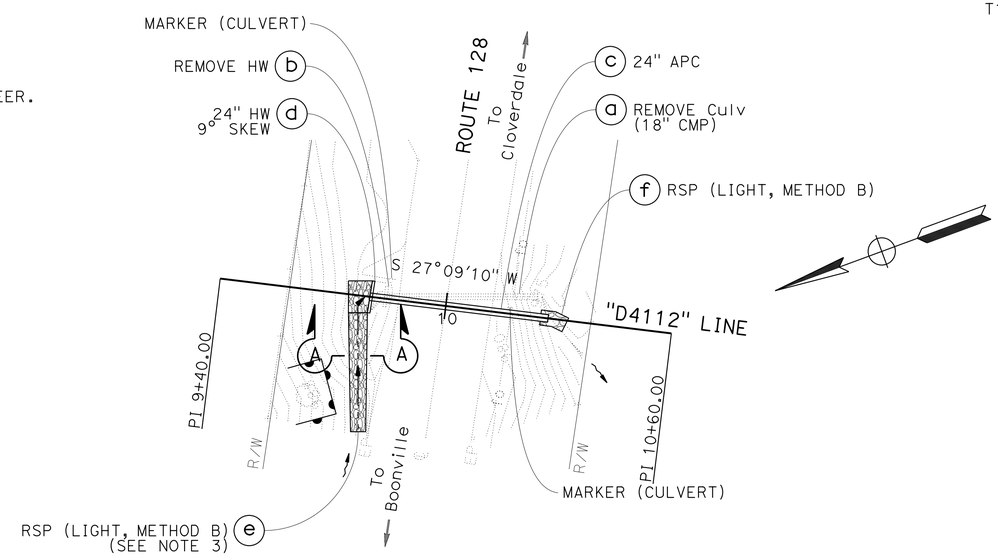

DRAINAGE SYSTEM No. 12

ROUTE 128
PM 41.12

PLAN

SCALE: 1" = 20'

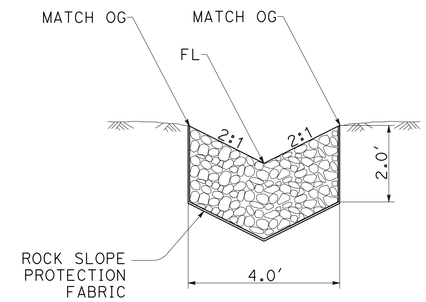

SECTION A-A

ROCK LINED DITCH

NO SCALE

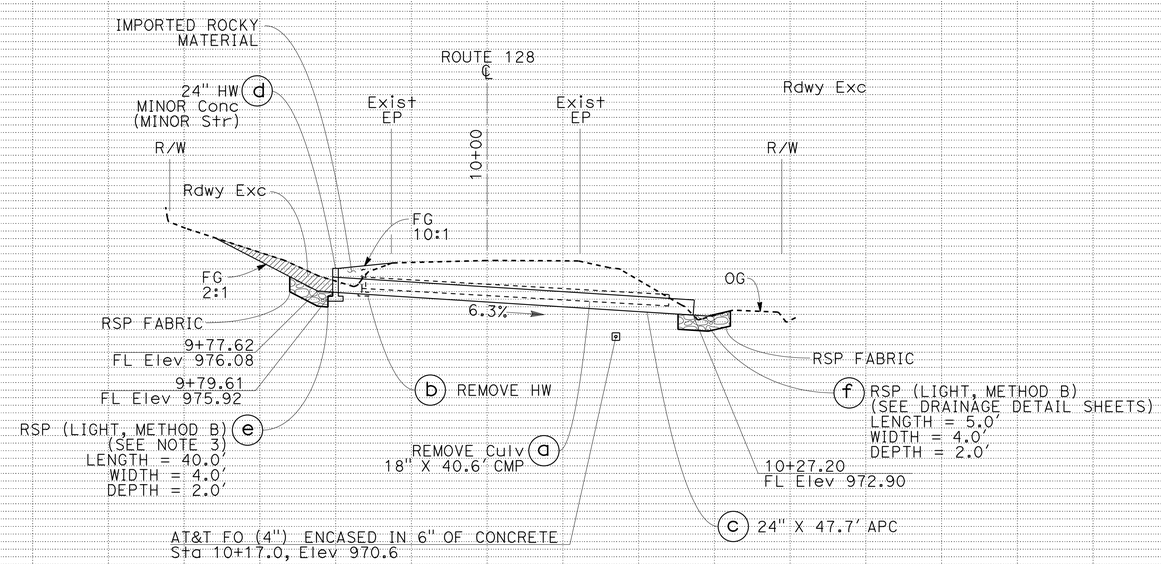

PROFILE

SCALE: 1"=10'

DRAINAGE PLAN AND PROFILE

SCALE AS SHOWN

D-12

REVISED BY	DATE REVISED
WKM	09-30-11

CALCULATED-DESIGNED BY: W. KEITH MACK
CHECKED BY: LUZ VILLANUEVA
FUNCTIONAL SUPERVISOR: SCOTT MANN

STATE OF CALIFORNIA - DEPARTMENT OF TRANSPORTATION
03-DESIGN
Caltrans

LAST REVISION 09-30-11
DATE PLOTTED => 28-APR-2016
TIME PLOTTED => 18:37

Dist	COUNTY	ROUTE	POST MILES TOTAL PROJECT	SHEET No.	TOTAL SHEETS
01	Men	128	30.1/48.5	15	52

REGISTERED CIVIL ENGINEER 4-25-16 DATE

PLANS APPROVAL DATE 4-25-16

REGISTERED PROFESSIONAL ENGINEER KENNETH KEATON No. 45864 Exp. 12-31-16 CIVIL STATE OF CALIFORNIA

THE STATE OF CALIFORNIA OR ITS OFFICERS OR AGENTS SHALL NOT BE RESPONSIBLE FOR THE ACCURACY OR COMPLETENESS OF SCANNED COPIES OF THIS PLAN SHEET.

T12N R12W MDB&M
SECTION 8

NOTES:

1. THIS PLAN IS ACCURATE FOR DRAINAGE WORK ONLY
2. FOR ACCURATE RIGHT OF WAY DATA, CONTACT RIGHT OF WAY ENGINEERING AT THE DISTRICT OFFICE.
3. FOR ROCK SLOPE PROTECTION DETAILS SEE DRAINAGE DETAIL SHEETS.
4. HW SKEW ANGLE IS MEASURED FROM A LINE PERPENDICULAR TO THE CULVERT ALIGNMENT.

POINT	STATION	OFFSET
1	9+43.40	13.11′ Rt
2	9+43.40	13.13′ Lt
3	9+61.12	13.14′ Lt
4	9+59.30	13.11′ Rt

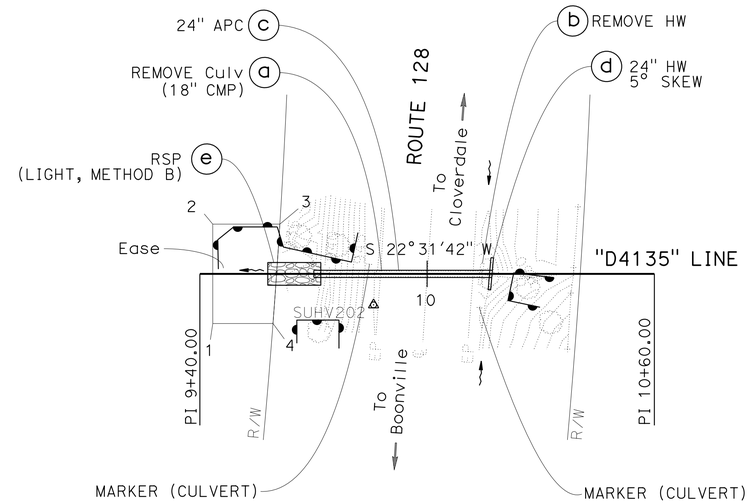

DRAINAGE SYSTEM No. 13

ROUTE 128
PM 41.35

PLAN

SCALE: 1" = 20′

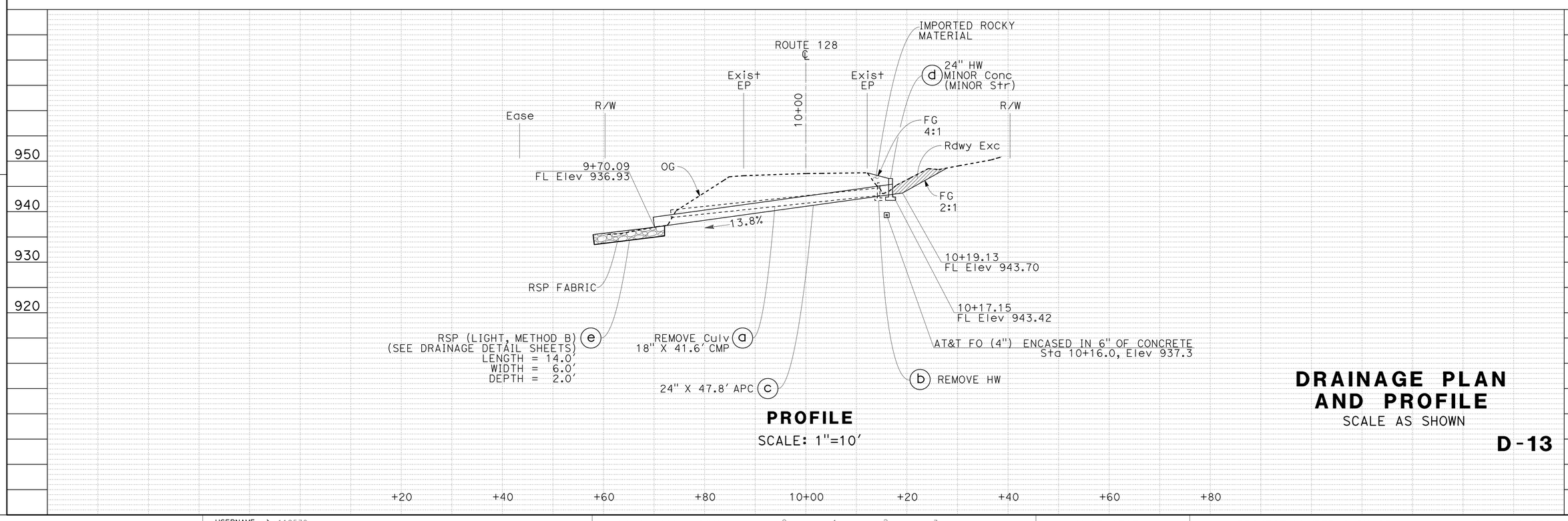

PROFILE

SCALE: 1"=10′

DRAINAGE PLAN AND PROFILE

SCALE AS SHOWN

D-13

STATE OF CALIFORNIA - DEPARTMENT OF TRANSPORTATION
Caltrans
03-DESIGN

FUNCTIONAL SUPERVISOR: SCOTT MANN
CALCULATED-DESIGNED BY: W. KEITH MACK
CHECKED BY: LUZ VILLANUEVA
REVISED BY: WKM
DATE REVISED: 09-30-11

LAST REVISION 09-30-11
DATE PLOTTED => 28-APR-2016
TIME PLOTTED => 18:37

Dist	COUNTY	ROUTE	POST MILES TOTAL PROJECT	SHEET No.	TOTAL SHEETS
01	Men	128	30.1/48.5	16	52

REGISTERED CIVIL ENGINEER 4-25-16 DATE

4-25-16
PLANS APPROVAL DATE

REGISTERED PROFESSIONAL ENGINEER KENNETH KEATON No. 45864 Exp. 12-31-16 CIVIL STATE OF CALIFORNIA

THE STATE OF CALIFORNIA OR ITS OFFICERS OR AGENTS SHALL NOT BE RESPONSIBLE FOR THE ACCURACY OR COMPLETENESS OF SCANNED COPIES OF THIS PLAN SHEET.

T12N R12W MDB&M
SECTION 15

NOTES:

1. THIS PLAN IS ACCURATE FOR DRAINAGE WORK ONLY.
2. FOR ACCURATE RIGHT OF WAY DATA, CONTACT RIGHT OF WAY ENGINEERING AT THE DISTRICT OFFICE
3. CONTRACTOR MUST CONTACT THE ENGINEER 2 WEEKS (10 WORKING DAYS) PRIOR TO BEGINNING WORK.

POINT	STATION	OFFSET
1	9+47.45	17.23′ R+
2	9+46.32	9.00′ L+
3	9+58.70	9.53′ L+
4	9+59.83	16.69′ R+

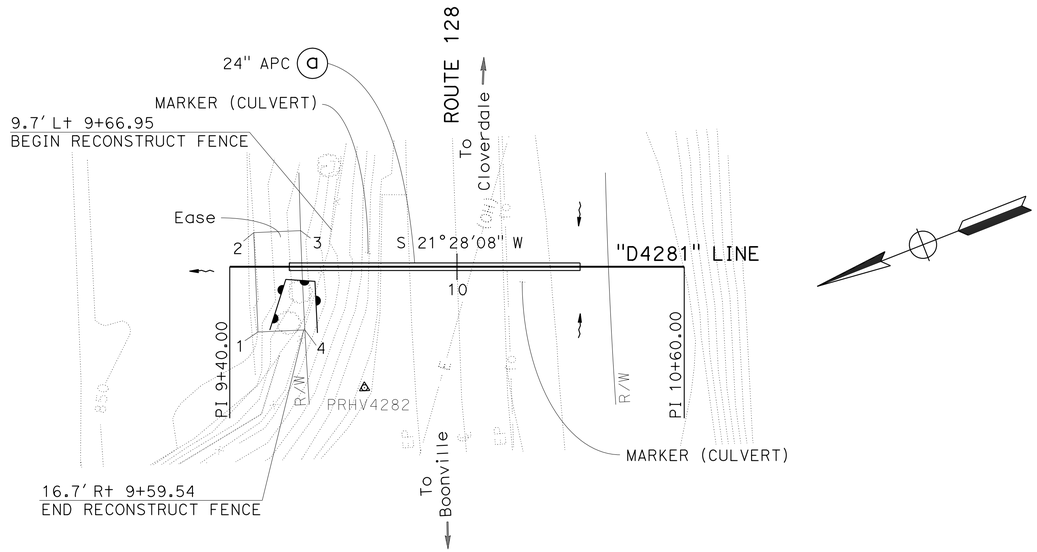

DRAINAGE SYSTEM No. 14

ROUTE 128
PM 42.81

PLAN

SCALE: 1" = 20′

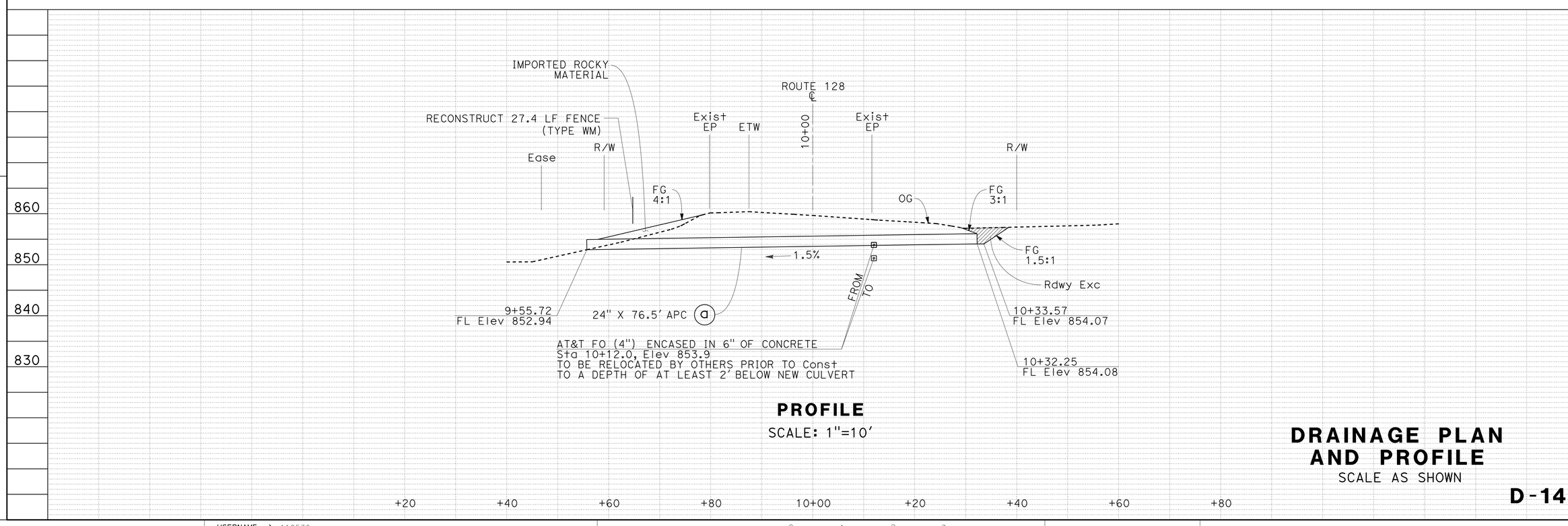

PROFILE

SCALE: 1"=10′

DRAINAGE PLAN AND PROFILE

SCALE AS SHOWN

D-14

STATE OF CALIFORNIA - DEPARTMENT OF TRANSPORTATION
Caltrans
03-DESIGN

FUNCTIONAL SUPERVISOR: SCOTT MANN
CALCULATED-DESIGNED BY: W. KEITH MACK
CHECKED BY: LUZ VILLANUEVA
REVISED BY: WKM
DATE REVISED: 09-30-11

LAST REVISION 09-30-11
DATE PLOTTED => 28-APR-2016
TIME PLOTTED => 18:37

Dist	COUNTY	ROUTE	POST MILES TOTAL PROJECT	SHEET No.	TOTAL SHEETS
01	Men	128	30.1/48.5	17	52

REGISTERED CIVIL ENGINEER 4-25-16 DATE

4-25-16
PLANS APPROVAL DATE

REGISTERED PROFESSIONAL ENGINEER KENNETH KEATON No. 45864 Exp. 12-31-16 CIVIL STATE OF CALIFORNIA

THE STATE OF CALIFORNIA OR ITS OFFICERS OR AGENTS SHALL NOT BE RESPONSIBLE FOR THE ACCURACY OR COMPLETENESS OF SCANNED COPIES OF THIS PLAN SHEET.

T12N R12W MDB&M
SECTION 15

NOTES:

1. THIS PLAN IS ACCURATE FOR DRAINAGE WORK ONLY.
2. FOR ACCURATE RIGHT OF WAY DATA, CONTACT RIGHT OF WAY ENGINEERING AT THE DISTRICT OFFICE.
3. CONTRACTOR TO REPLACE LANDOWNER ROCK FEATURES AROUND OUTLET UPON COMPLETION OF WORK AT SITE.
4. CONTRACTOR MUST CONTACT THE ENGINEER 2 WEEKS (10 WORKING DAYS) PRIOR TO BEGINNING WORK.

POINT	STATION	OFFSET
1	9+55.20	14.24′ R+
2	9+54.71	12.00′ L+
3	9+60.15	12.10′ L+
4	9+60.41	14.15′ R+

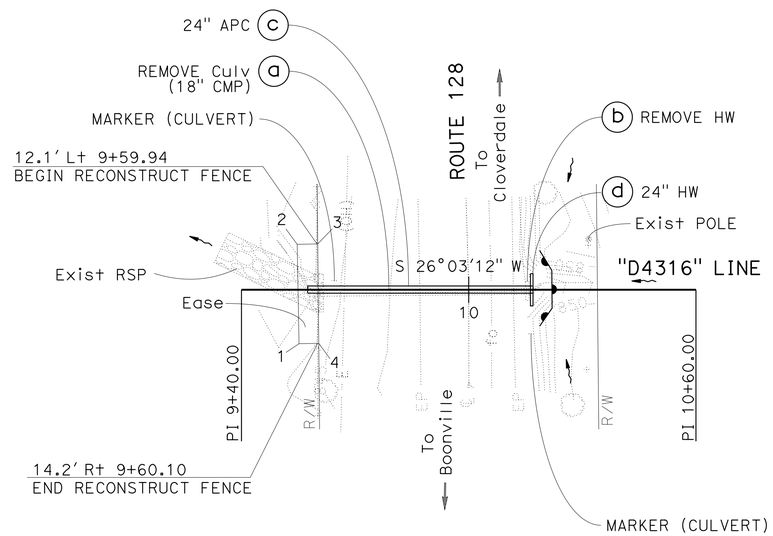

DRAINAGE SYSTEM No. 15

ROUTE 128
PM 43.16

PLAN

SCALE: 1" = 20′

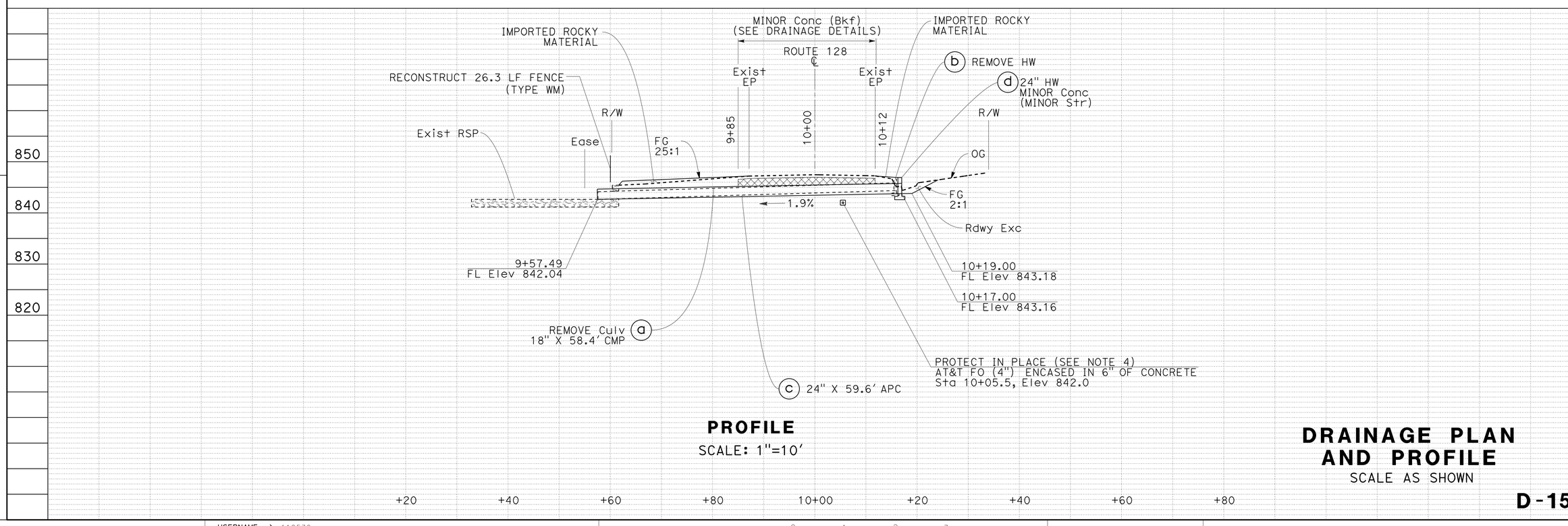

PROFILE

SCALE: 1"=10′

DRAINAGE PLAN AND PROFILE

SCALE AS SHOWN

D-15

REVISED BY	DATE REVISED
WKM	09-30-11

CALCULATED-DESIGNED BY: W. KEITH MACK
CHECKED BY: LUZ VILLANUEVA
FUNCTIONAL SUPERVISOR: SCOTT MANN

STATE OF CALIFORNIA - DEPARTMENT OF TRANSPORTATION
03-DESIGN
Caltrans

LAST REVISION 09-30-11
DATE PLOTTED => 26-APR-2016
TIME PLOTTED => 18:37

Dist	COUNTY	ROUTE	POST MILES TOTAL PROJECT	SHEET No.	TOTAL SHEETS
01	Men	128	30.1/48.5	18	52

REGISTERED CIVIL ENGINEER 4-25-16 DATE

4-25-16
PLANS APPROVAL DATE

REGISTERED PROFESSIONAL ENGINEER KENNETH KEATON No. 45864 Exp. 12-31-16 CIVIL STATE OF CALIFORNIA

THE STATE OF CALIFORNIA OR ITS OFFICERS OR AGENTS SHALL NOT BE RESPONSIBLE FOR THE ACCURACY OR COMPLETENESS OF SCANNED COPIES OF THIS PLAN SHEET.

T12N R12W MDB&M
SECTION 14

NOTES:

1. THIS PLAN IS ACCURATE FOR DRAINAGE WORK ONLY
2. FOR ACCURATE RIGHT OF WAY DATA, CONTACT RIGHT OF WAY ENGINEERING AT THE DISTRICT OFFICE.
3. FOR ROCK SLOPE PROTECTION DETAILS SEE DRAINAGE DETAIL SHEETS.
4. CONTRACTOR MUST CONTACT THE ENGINEER 2 WEEKS (10 WORKING DAYS) PRIOR TO BEGINNING WORK.

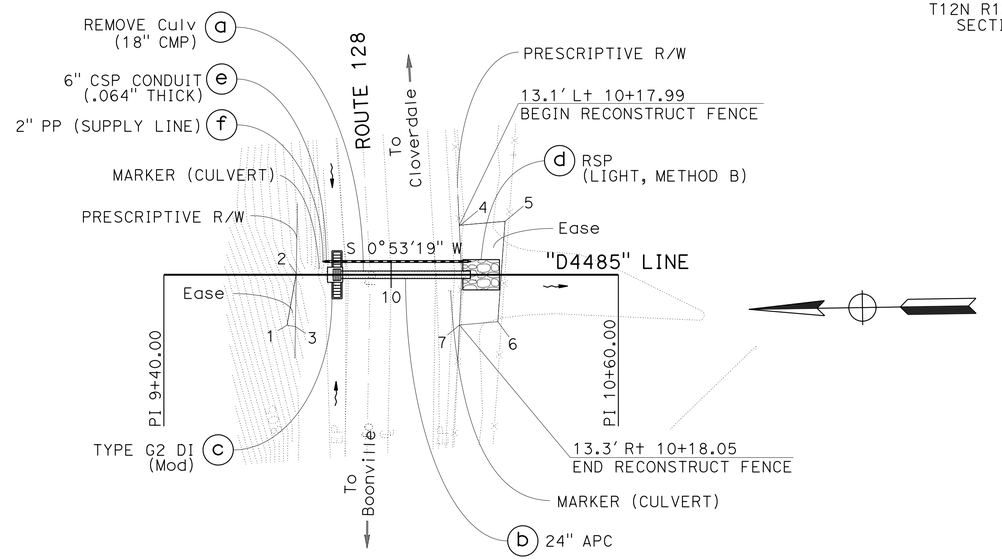

POINT	STATION	OFFSET
1	9+72.52	13.30' Rt
2	9+74.96	0.36' Lt
3	9+74.73	13.70' Rt

POINT	STATION	OFFSET
4	10+17.99	13.07' Lt
5	10+30.08	14.11' Lt
6	10+28.18	12.40' Rt
7	10+18.07	13.27' Rt

DRAINAGE SYSTEM No. 16

ROUTE 128
PM 44.85

PLAN

SCALE: 1" = 20'

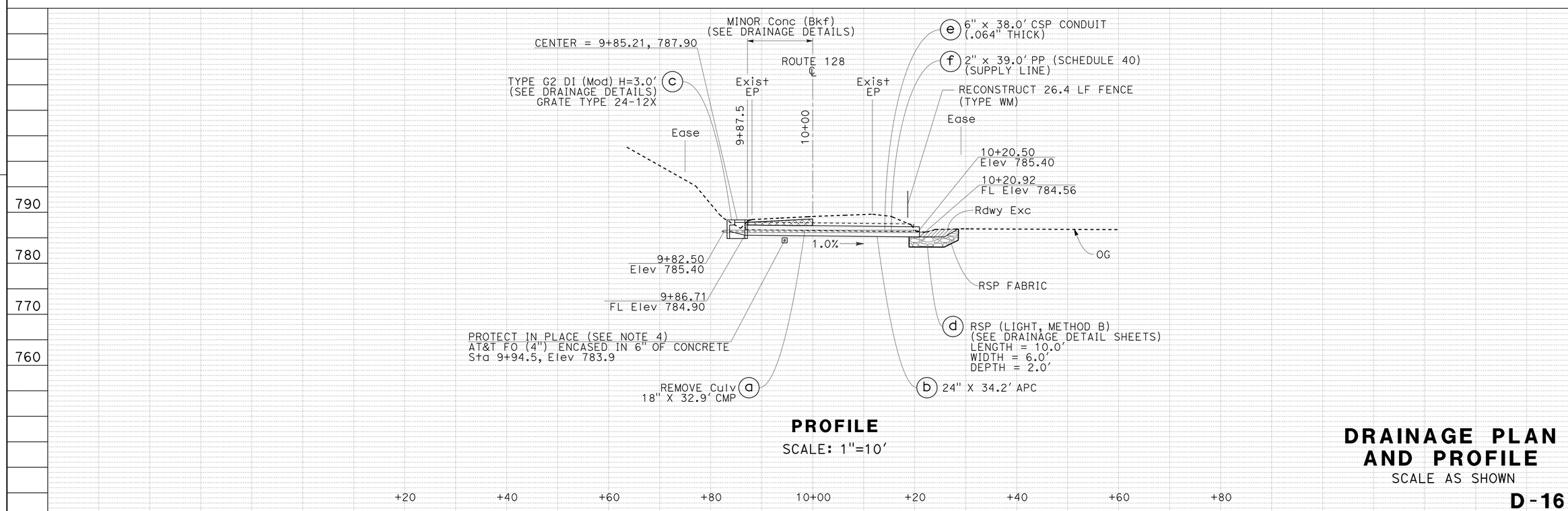

PROFILE

SCALE: 1"=10'

DRAINAGE PLAN AND PROFILE

SCALE AS SHOWN

D-16

REVISED BY	DATE REVISED
WKM	09-30-11

CALCULATED-DESIGNED BY: W. KEITH MACK
CHECKED BY: LUZ VILLANUEVA

FUNCTIONAL SUPERVISOR: SCOTT MANN

STATE OF CALIFORNIA - DEPARTMENT OF TRANSPORTATION
Caltrans
03-DESIGN

LAST REVISION 09-30-11
DATE PLOTTED => 28-APR-2016
TIME PLOTTED => 18:37

Dist	COUNTY	ROUTE	POST MILES TOTAL PROJECT	SHEET No.	TOTAL SHEETS
01	Men	128	30.1/48.5	19	52

REGISTERED CIVIL ENGINEER 4-25-16 DATE

PLANS APPROVAL DATE 4-25-16

REGISTERED PROFESSIONAL ENGINEER KENNETH KEATON No. 45864 Exp. 12-31-16 CIVIL STATE OF CALIFORNIA

THE STATE OF CALIFORNIA OR ITS OFFICERS OR AGENTS SHALL NOT BE RESPONSIBLE FOR THE ACCURACY OR COMPLETENESS OF SCANNED COPIES OF THIS PLAN SHEET.

T12N R11W MDB&M
SECTION 18

NOTES:

1. THIS PLAN IS ACCURATE FOR DRAINAGE WORK ONLY
2. FOR ACCURATE RIGHT OF WAY DATA, CONTACT RIGHT OF WAY ENGINEERING AT THE DISTRICT OFFICE.
3. ALIGNMENT OF ROCK LINED DITCH IS APPROXIMATE. THE EXACT PLACEMENT WILL BE DETERMINED IN FIELD BY THE ENGINEER.
4. FOR DOWNDRAIN AND PAVED GUTTER FLARE DETAILS NOT SHOWN, SEE STANDARD PLAN 87A.
5. FOR ROCK SLOPE PROTECTION DETAILS SEE DRAINAGE DETAIL SHEETS.
6. THE ANGLE OF EACH ELBOW IS APPROXIMATE. THE EXACT ANGLE WILL BE DETERMINED IN THE FIELD BY THE ENGINEER.
7. CONTRACTOR MUST CONTACT THE ENGINEER 2 WEEKS (10 WORKING DAYS) PRIOR TO BEGINNING WORK.

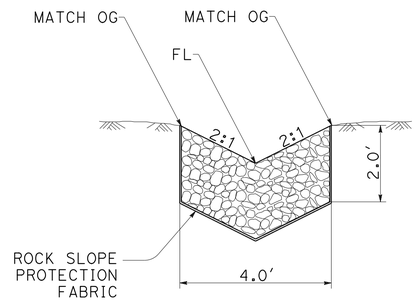

SECTION A-A

ROCK LINED DITCH

NO SCALE

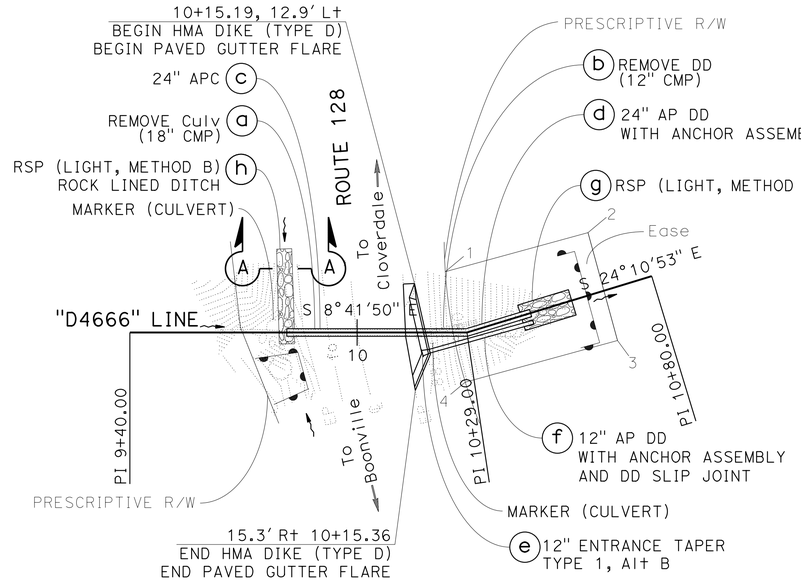

DRAINAGE SYSTEM No. 17

ROUTE 128
PM 46.66

PLAN

SCALE: 1" = 20'

POINT	STATION	OFFSET
1	10+23.29	16.05' Lt
2	10+67.26	15.89' Lt
3	10+66.41	13.62' Rt
4	10+28.55	13.11 Rt

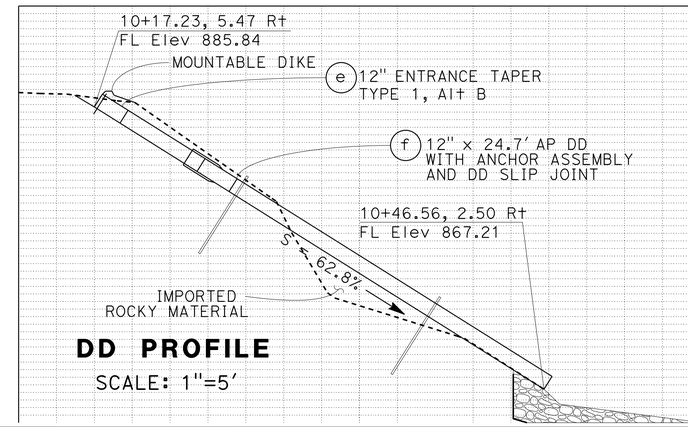

DD PROFILE

SCALE: 1"=5'

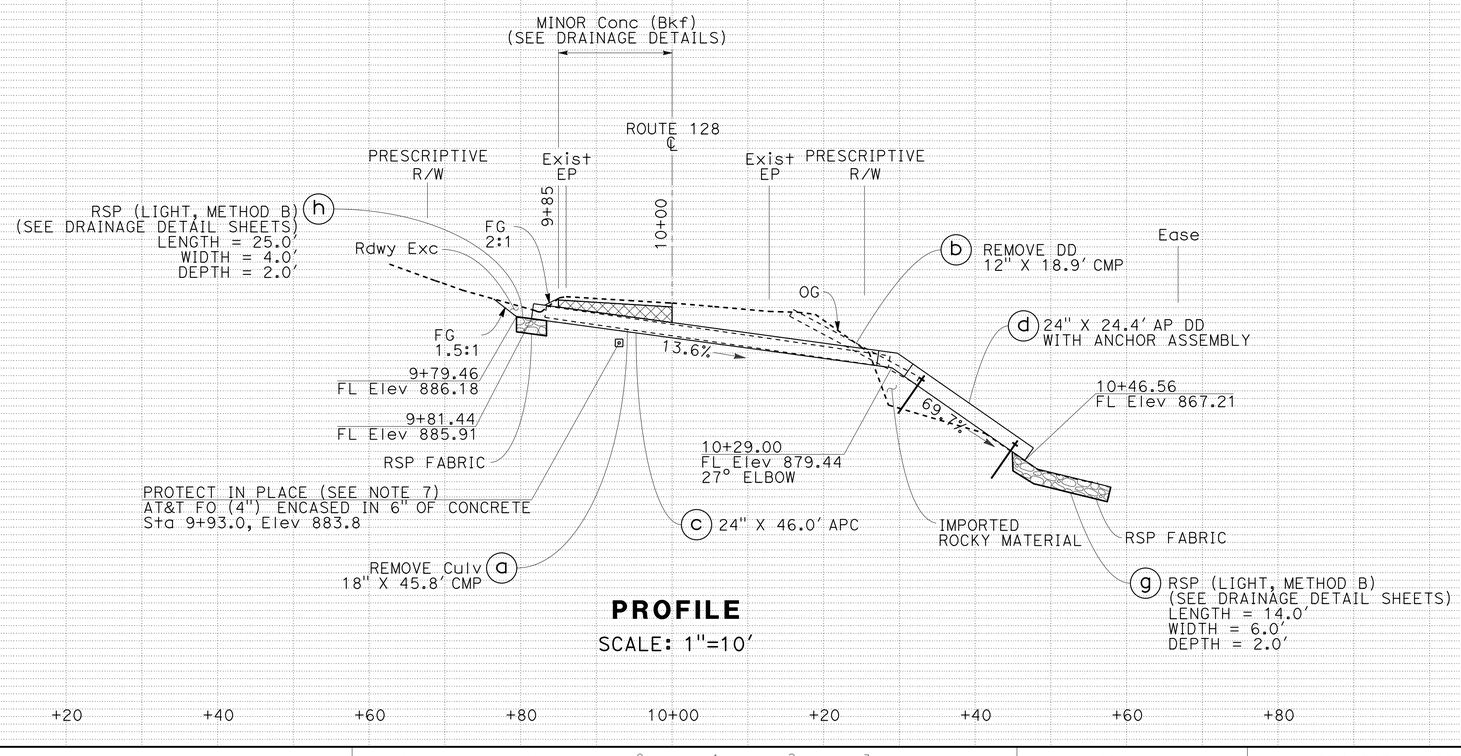

PROFILE

SCALE: 1"=10'

DRAINAGE PLAN AND PROFILE

SCALE AS SHOWN

D-17

REVISED BY	DATE REVISED	CALCULATED-DESIGNED BY	CHECKED BY	FUNCTIONAL SUPERVISOR
WKM	09-30-11	W. KEITH MACK	LUZ VILLANUEVA	SCOTT MANN

STATE OF CALIFORNIA - DEPARTMENT OF TRANSPORTATION
Caltrans 03-DESIGN

LAST REVISION 09-30-11 DATE PLOTTED => 28-APR-2016 TIME PLOTTED => 18:37

Dist	COUNTY	ROUTE	POST MILES TOTAL PROJECT	SHEET No.	TOTAL SHEETS
01	Men	128	30.1/48.5	20	52

REGISTERED CIVIL ENGINEER 4-25-16 DATE

PLANS APPROVAL DATE 4-25-16

REGISTERED PROFESSIONAL ENGINEER KENNETH KEATON No. 45864 Exp. 12-31-16 CIVIL STATE OF CALIFORNIA

THE STATE OF CALIFORNIA OR ITS OFFICERS OR AGENTS SHALL NOT BE RESPONSIBLE FOR THE ACCURACY OR COMPLETENESS OF SCANNED COPIES OF THIS PLAN SHEET.

NOTES:

1. THIS PLAN IS ACCURATE FOR DRAINAGE WORK ONLY
2. FOR ACCURATE RIGHT OF WAY DATA, CONTACT RIGHT OF WAY ENGINEERING AT THE DISTRICT OFFICE.
3. FOR ROCK SLOPE PROTECTION DETAILS SEE DRAINAGE DETAIL SHEETS.

T12N R11W MDB&M
SECTION 18

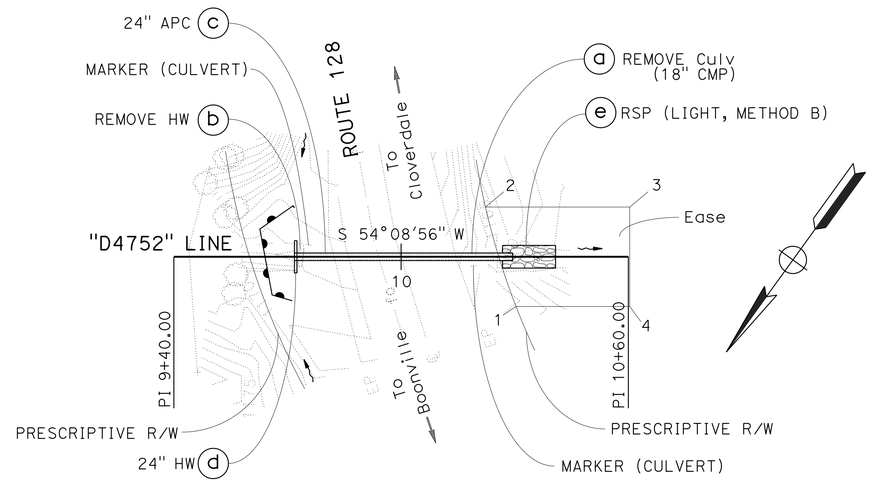

POINT	STATION	OFFSET
1	10+30.34	13.12' Rt
2	10+22.25	13.12' Lt
3	10+60.35	13.12' Lt
4	10+60.36	13.12' Rt

DRAINAGE SYSTEM No. 18

ROUTE 128
PM 47.52

PLAN

SCALE: 1" = 20'

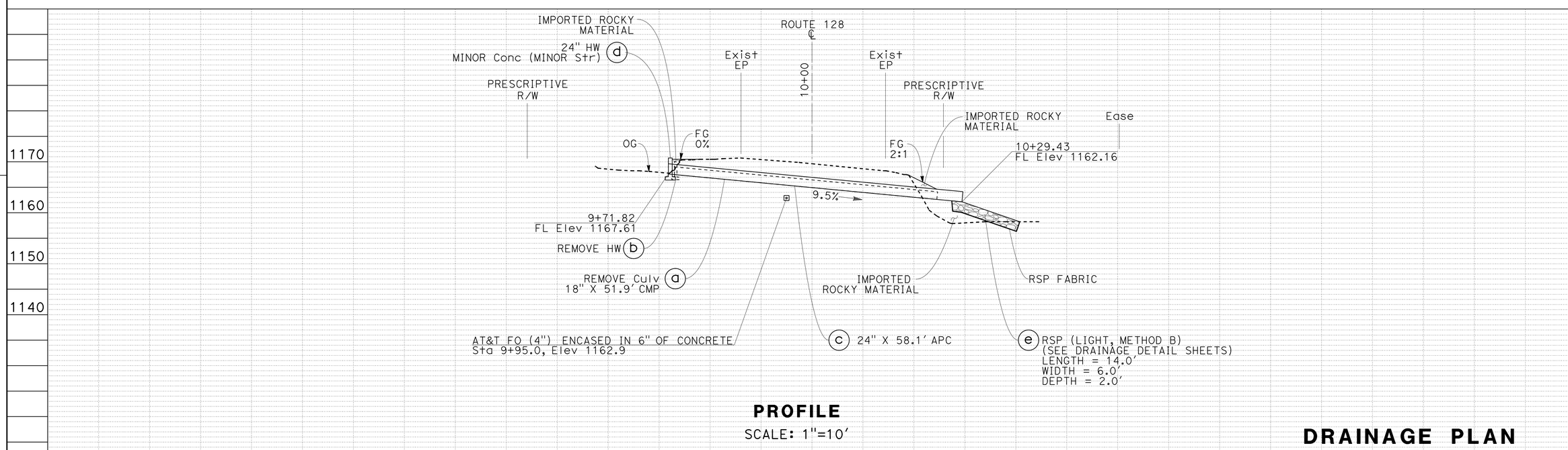

PROFILE

SCALE: 1"=10'

DRAINAGE PLAN AND PROFILE

SCALE AS SHOWN

D-18

REVISED BY	DATE REVISED
WKM	09-30-11

CALCULATED-DESIGNED BY: W. KEITH MACK
CHECKED BY: LUZ VILLANUEVA
FUNCTIONAL SUPERVISOR: SCOTT MANN

STATE OF CALIFORNIA - DEPARTMENT OF TRANSPORTATION
Caltrans
03-DESIGN

LAST REVISION 09-30-11
DATE PLOTTED => 28-APR-2016
TIME PLOTTED => 18:37

Dist	COUNTY	ROUTE	POST MILES TOTAL PROJECT	SHEET No.	TOTAL SHEETS
01	Men	128	30.1/48.5	21	52

REGISTERED CIVIL ENGINEER 4-25-16 DATE

4-25-16
PLANS APPROVAL DATE

REGISTERED PROFESSIONAL ENGINEER KENNETH KEATON No. 45864 Exp. 12-31-16 CIVIL STATE OF CALIFORNIA

THE STATE OF CALIFORNIA OR ITS OFFICERS OR AGENTS SHALL NOT BE RESPONSIBLE FOR THE ACCURACY OR COMPLETENESS OF SCANNED COPIES OF THIS PLAN SHEET.

NOTES:

1. THIS PLAN IS ACCURATE FOR DRAINAGE WORK ONLY
2. FOR ACCURATE RIGHT OF WAY DATA, CONTACT RIGHT OF WAY ENGINEERING AT THE DISTRICT OFFICE.
3. FOR ROCK SLOPE PROTECTION DETAILS SEE DRAINAGE DETAIL SHEETS.
4. HW SKEW ANGLE IS MEASURED FROM A LINE PERPENDICULAR TO THE CULVERT ALIGNMENT.
5. CONTRACTOR MUST CONTACT THE ENGINEER 2 WEEKS (10 WORKING DAYS) PRIOR TO BEGINNING WORK.

T12N R11W MDB&M
SECTION 17

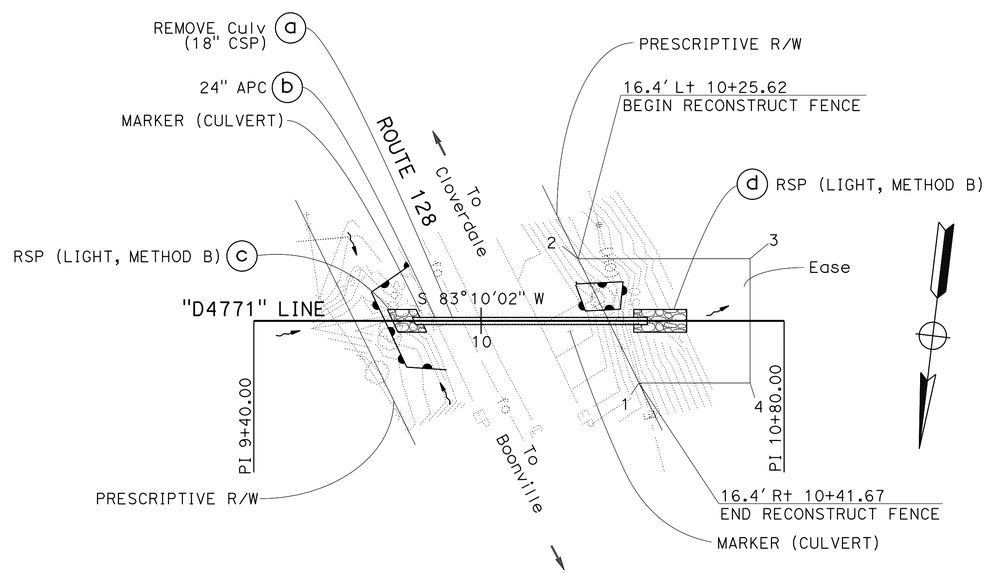

POINT	STATION	OFFSET
1	10+41.67	16.40' R+
2	10+25.62	16.40' L+
3	10+71.00	16.40' L+
4	10+71.00	16.40' R+

DRAINAGE SYSTEM No. 19

ROUTE 128
PM 47.71

PLAN

SCALE: 1" = 20'

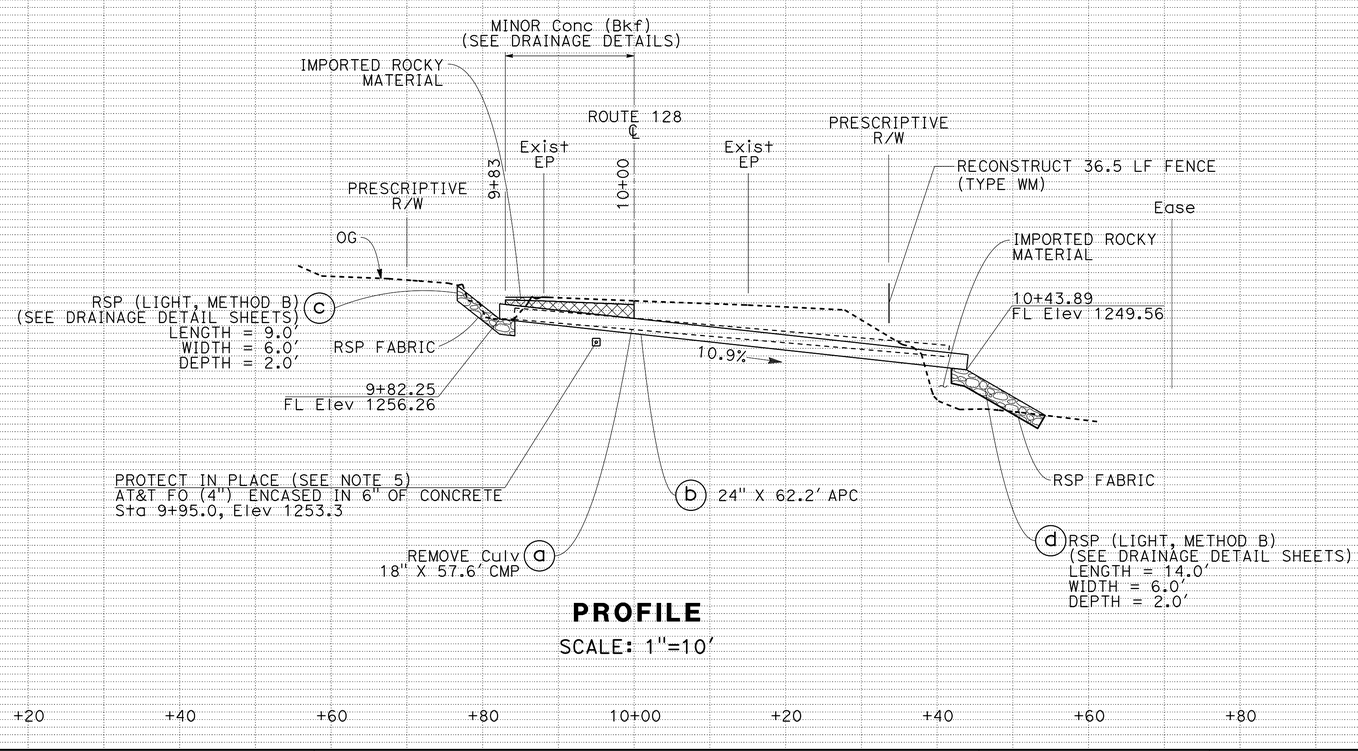

PROFILE

SCALE: 1"=10'

DRAINAGE PLAN AND PROFILE

SCALE AS SHOWN

D-19

STATE OF CALIFORNIA - DEPARTMENT OF TRANSPORTATION
03-DESIGN
Caltrans

FUNCTIONAL SUPERVISOR: SCOTT MANN
CALCULATED-DESIGNED BY: W. KEITH MACK
CHECKED BY: LUZ VILLANUEVA
REVISED BY: WKM
DATE REVISED: 09-30-11

LAST REVISION 09-30-11
DATE PLOTTED => 28-APR-2016
TIME PLOTTED => 18:37

Dist	COUNTY	ROUTE	POST MILES TOTAL PROJECT	SHEET No.	TOTAL SHEETS
01	Men	128	30.1/48.5	22	52

REGISTERED CIVIL ENGINEER 4-25-16 DATE

PLANS APPROVAL DATE 4-25-16

REGISTERED PROFESSIONAL ENGINEER KENNETH KEATON No. 45864 Exp. 12-31-16 CIVIL STATE OF CALIFORNIA

THE STATE OF CALIFORNIA OR ITS OFFICERS OR AGENTS SHALL NOT BE RESPONSIBLE FOR THE ACCURACY OR COMPLETENESS OF SCANNED COPIES OF THIS PLAN SHEET.

NOTES:

1. THIS PLAN IS ACCURATE FOR DRAINAGE WORK ONLY
2. FOR ACCURATE RIGHT OF WAY DATA, CONTACT RIGHT OF WAY ENGINEERING AT THE DISTRICT OFFICE.

T12N R11W MDB&M
SECTION 20

POINT	STATION	OFFSET
1	9+67.94	13.12′ R+
2	9+67.94	13.12′ L+
3	9+76.65	13.12′ L+
4	9+73.42	13.12′ R+

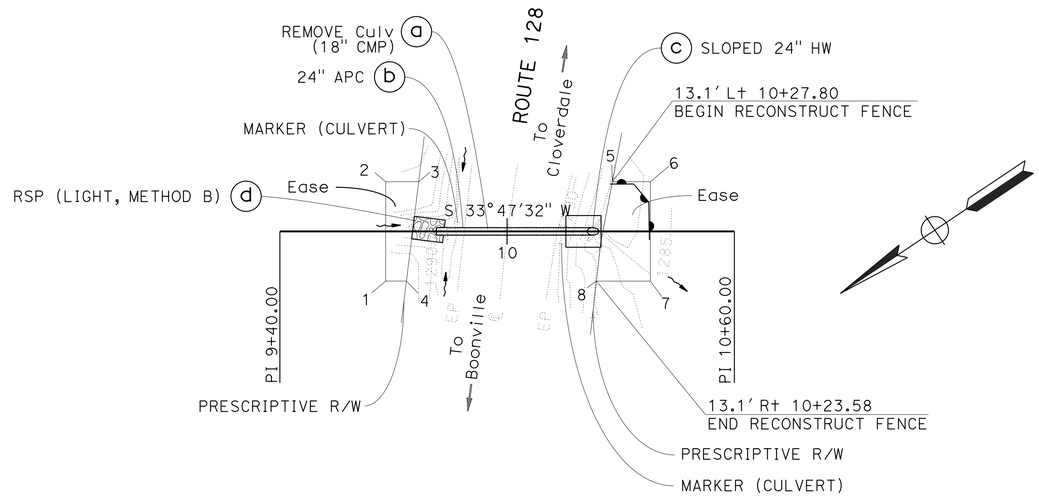

POINT	STATION	OFFSET
5	10+27.80	13.12′ L+
6	10+37.82	13.12′ L+
7	10+37.82	13.12′ R+
8	10+23.58	13.12′ R+

DRAINAGE SYSTEM No. 20

ROUTE 128
PM 47.97

PLAN

SCALE: 1" = 20′

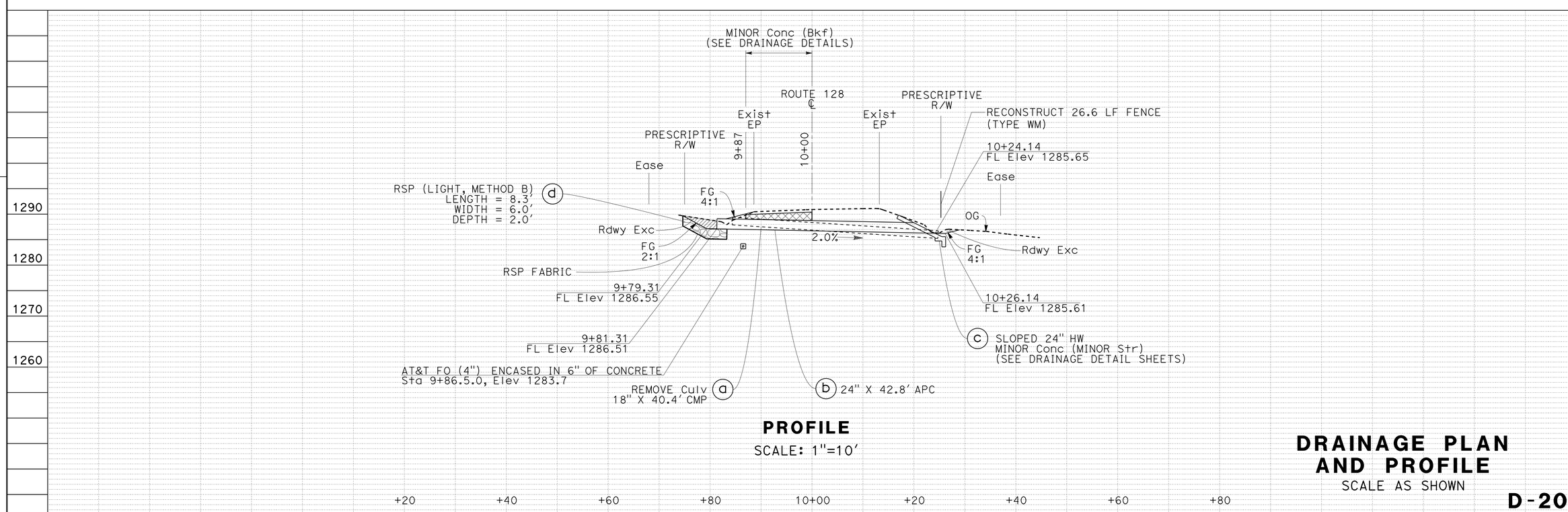

PROFILE

SCALE: 1"=10′

DRAINAGE PLAN AND PROFILE

SCALE AS SHOWN

D-20

REVISED BY	WKM
DATE REVISED	09-30-11
W. KEITH MACK	
LUZ VILLANUEVA	
CALCULATED-DESIGNED BY	
CHECKED BY	
FUNCTIONAL SUPERVISOR	SCOTT MANN

STATE OF CALIFORNIA - DEPARTMENT OF TRANSPORTATION
03-DESIGN
Caltrans

LAST REVISION 09-30-11
DATE PLOTTED => 28-APR-2016
TIME PLOTTED => 18:37

Dist	COUNTY	ROUTE	POST MILES TOTAL PROJECT	SHEET No.	TOTAL SHEETS
01	Men	128	30.1/48.5	23	52

REGISTERED CIVIL ENGINEER 4-25-16 DATE

4-25-16
PLANS APPROVAL DATE

REGISTERED PROFESSIONAL ENGINEER KENNETH KEATON No. 45864 Exp. 12-31-16 CIVIL STATE OF CALIFORNIA

THE STATE OF CALIFORNIA OR ITS OFFICERS OR AGENTS SHALL NOT BE RESPONSIBLE FOR THE ACCURACY OR COMPLETENESS OF SCANNED COPIES OF THIS PLAN SHEET.

T12N R11W MDB&M
SECTION 20

NOTES:

1. THIS PLAN IS ACCURATE FOR DRAINAGE WORK ONLY
2. FOR ACCURATE RIGHT OF WAY DATA, CONTACT RIGHT OF WAY ENGINEERING AT THE DISTRICT OFFICE.

POINT	STATION	OFFSET
1	9+61.10	13.12′ R+
2	9+61.10	13.12′ L+
3	9+72.92	13.12′ L+
4	9+74.99	13.12′ R+

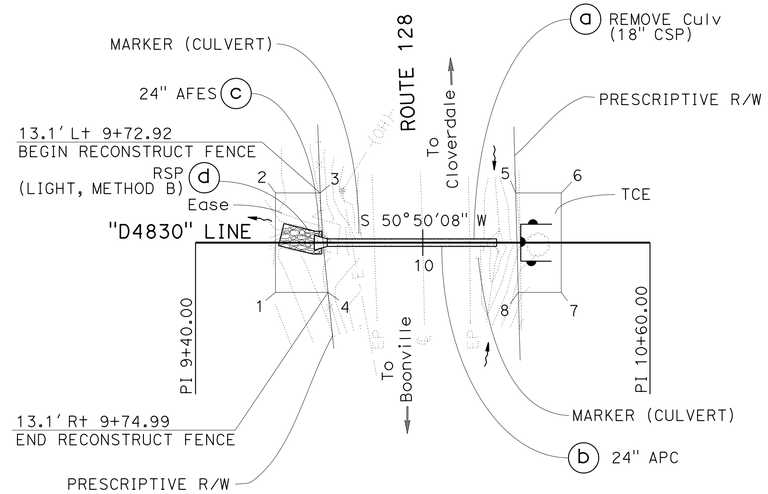

POINT	STATION	OFFSET
5	10+24.52	13.12′ L+
6	10+36.56	13.12′ L+
7	10+36.56	13.12′ R+
8	10+25.23	13.12′ R+

DRAINAGE SYSTEM No. 21

ROUTE 128
PM 48.30

PLAN

SCALE: 1" = 20′

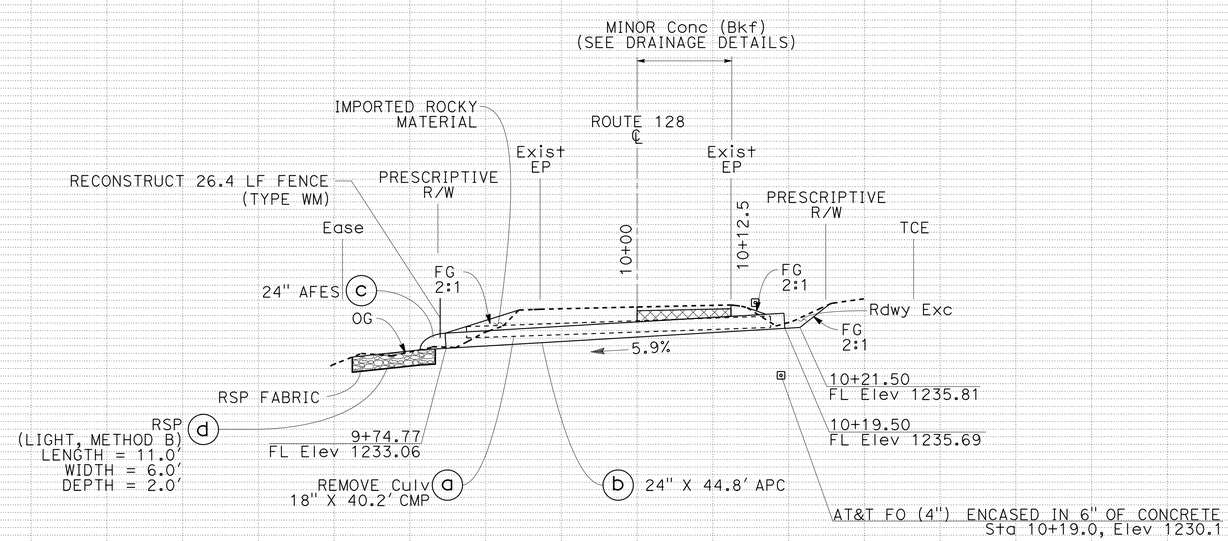

PROFILE

SCALE: 1"=10′

DRAINAGE PLAN AND PROFILE

SCALE AS SHOWN

D-21

REVISED BY	DATE REVISED
WKM	09-30-11

CALCULATED-DESIGNED BY: W. KEITH MACK
CHECKED BY: LUZ VILLANUEVA
FUNCTIONAL SUPERVISOR: SCOTT MANN

STATE OF CALIFORNIA - DEPARTMENT OF TRANSPORTATION
Caltrans
03-DESIGN

LAST REVISION 09-30-11
DATE PLOTTED => 28-APR-2016
TIME PLOTTED => 18:37

Dist	COUNTY	ROUTE	POST MILES TOTAL PROJECT	SHEET No.	TOTAL SHEETS
01	Men	128	30.1/48.5	24	52

REGISTERED CIVIL ENGINEER 4-25-16 DATE

PLANS APPROVAL DATE 4-25-16

REGISTERED PROFESSIONAL ENGINEER KENNETH KEATON No. 45864 Exp. 12-31-16 CIVIL STATE OF CALIFORNIA

THE STATE OF CALIFORNIA OR ITS OFFICERS OR AGENTS SHALL NOT BE RESPONSIBLE FOR THE ACCURACY OR COMPLETENESS OF SCANNED COPIES OF THIS PLAN SHEET.

T12N R11W MDB&M
SECTION 20

NOTES:

1. THIS PLAN IS ACCURATE FOR DRAINAGE WORK ONLY
2. FOR ACCURATE RIGHT OF WAY DATA, CONTACT RIGHT OF WAY ENGINEERING AT THE DISTRICT OFFICE.

POINT	STATION	OFFSET	BEARING
1	9+50.62	2.56′ R±	-
2	9+70.00	20.06′ L±	S88°53′04"E
3	9+70.00	15.56′ L±	S61°34′40"E
4	9+79.16	14.76′ R±	-

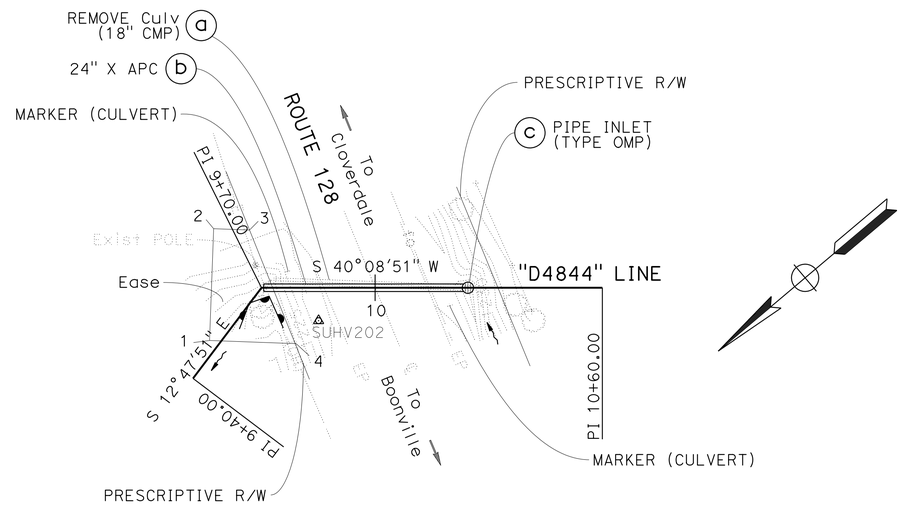

DRAINAGE SYSTEM No. 22

ROUTE 128
PM 48.44

PLAN

SCALE: 1" = 20′

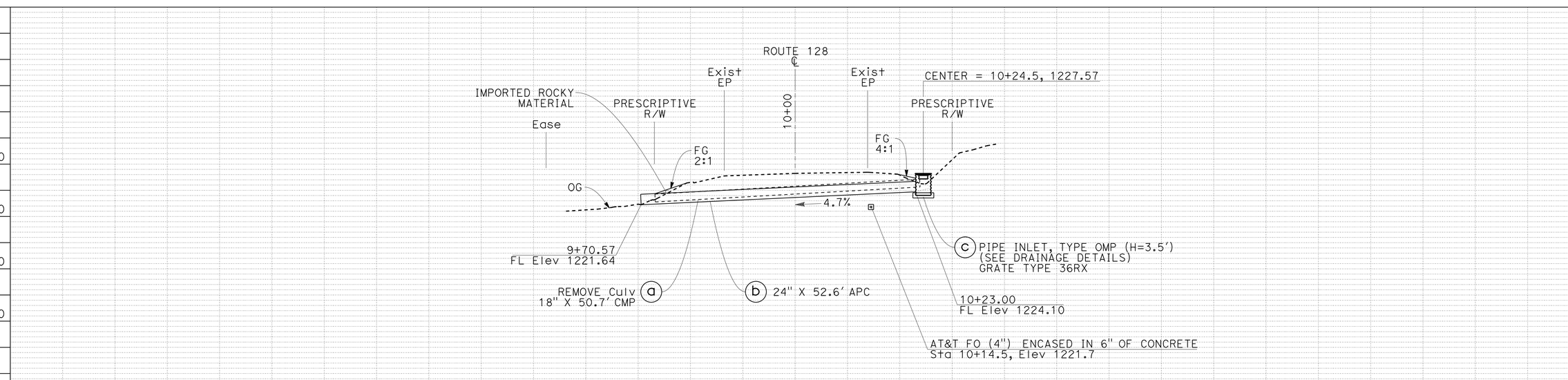

PROFILE

SCALE: 1"=10′

DRAINAGE PLAN AND PROFILE

SCALE AS SHOWN

D-22

REVISED BY	DATE REVISED
WKM	09-30-11

CALCULATED-DESIGNED BY: W. KEITH MACK
CHECKED BY: LUZ VILLANUEVA
FUNCTIONAL SUPERVISOR: SCOTT MANN

STATE OF CALIFORNIA - DEPARTMENT OF TRANSPORTATION
Caltrans
03-DESIGN

LAST REVISION 09-30-11
DATE PLOTTED => 28-APR-2016
TIME PLOTTED => 18:37

Dist	COUNTY	ROUTE	POST MILES TOTAL PROJECT	SHEET No.	TOTAL SHEETS
01	Men	128	30.1/48.5	25	52

REGISTERED CIVIL ENGINEER 4-25-16 DATE

4-25-16
PLANS APPROVAL DATE

REGISTERED PROFESSIONAL ENGINEER KENNETH KEATON No. 45864 Exp. 12-31-16 CIVIL STATE OF CALIFORNIA

THE STATE OF CALIFORNIA OR ITS OFFICERS OR AGENTS SHALL NOT BE RESPONSIBLE FOR THE ACCURACY OR COMPLETENESS OF SCANNED COPIES OF THIS PLAN SHEET.

NOTE:

1. SEE STANDARD PLANS A62D, A62DA, AND A62F FOR EXCAVATION AND BACKFILL DETAILS.
2. FOR LENGTH, WIDTH, AND DEPTH OF RSP SEE DRAINAGE PLAN AND PROFILE SHEETS.
3. TRENCH WIDTH AND CONSTRUCTION TIME MAY BE SIGNIFICANTLY REDUCED WITH THE OPTION OF SLURRY CEMENT AS BACKFILL MATERIAL. SEE Std Spec 19-3.062 FOR DETAILS.
4. EXISTING AC THICKNESS IN PROJECT AREA IS 18" ON AVERAGE AND CAN VARY UP TO 36" AT INDIVIDUAL LOCATIONS.

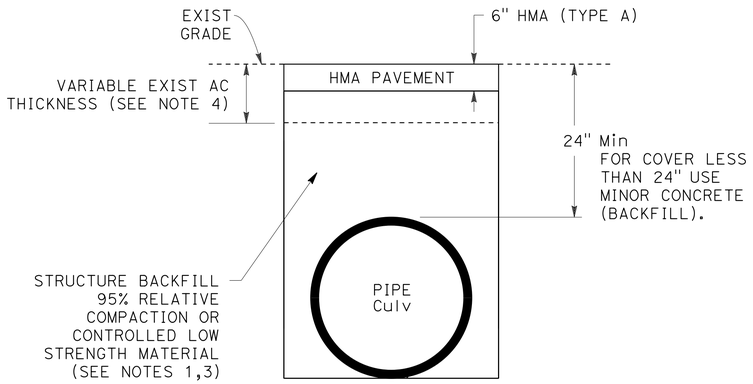

STRUCTURE BACKFILL UNDER PAVEMENT

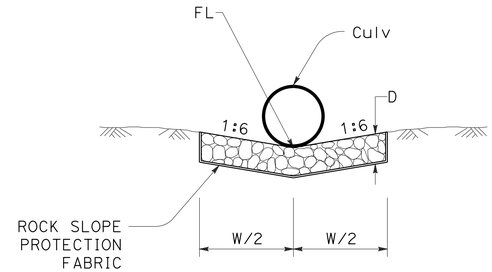

SECTION D-D

ABBREVIATIONS:

L - LENGTH OF RSP
W - WIDTH OF RSP
D - DEPTH OF RSP

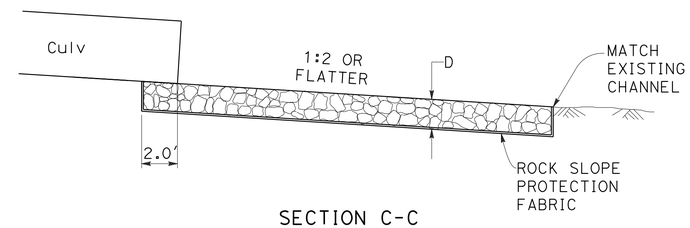

SECTION C-C

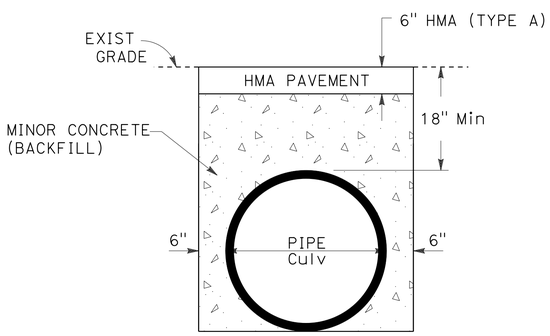

MINOR CONCRETE (BACKFILL)

ROUTE 128

DRAINAGE SYSTEM No.	LOCATION PM
2	30.57
6	35.42
9	38.77
11	40.75
15	43.16
16	44.85
17	46.66
19	47.71
20	47.97
21	48.30

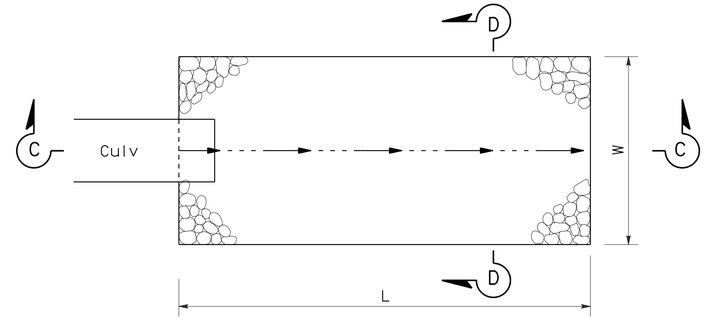

PLAN

ROCK SLOPE PROTECTION

SEE NOTE 2

DRAINAGE SYSTEM No.	LOCATION PM
3	31.03
5	31.26
9	38.77
13	41.35
16	44.85
17	46.66
18	47.52
19	47.71
20	47.97

DRAINAGE DETAILS

NO SCALE

DD-1

REVISED BY	DATE REVISED
W. KEITH MACK	SARJU D. PATEL
CALCULATED-DESIGNED BY	CHECKED BY
FUNCTIONAL SUPERVISOR	SCOTT MANN

STATE OF CALIFORNIA - DEPARTMENT OF TRANSPORTATION
Caltrans
03-DESIGN

LAST REVISION 08-17-11 | DATE PLOTTED => 28-APR-2016 | TIME PLOTTED => 18:37

Dist	COUNTY	ROUTE	POST MILES TOTAL PROJECT	SHEET No.	TOTAL SHEETS
01	Men	128	30.1/48.5	26	52

REGISTERED CIVIL ENGINEER 4-25-16 DATE

4-25-16
PLANS APPROVAL DATE

REGISTERED PROFESSIONAL ENGINEER KENNETH KEATON No. 45864 Exp. 12-31-16 CIVIL STATE OF CALIFORNIA

THE STATE OF CALIFORNIA OR ITS OFFICERS OR AGENTS SHALL NOT BE RESPONSIBLE FOR THE ACCURACY OR COMPLETENESS OF SCANNED COPIES OF THIS PLAN SHEET.

NOTES:

1. SEE STANDARD PLAN SHEET D75B FOR CONCRETE PIPE INLET DETAILS NOT SHOWN.
2. SEE STANDARD PLAN SHEET D77B FOR GRATE DETAILS.

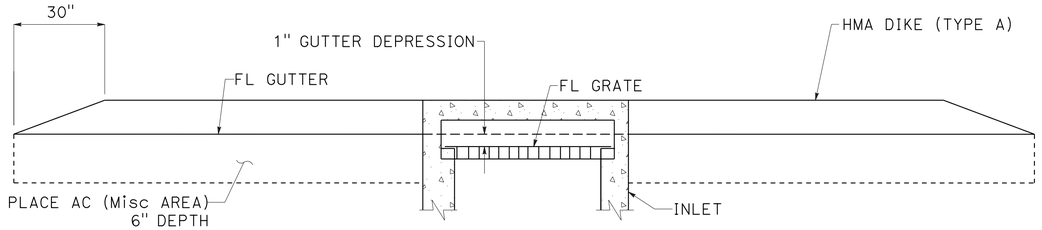

SECTION A-A

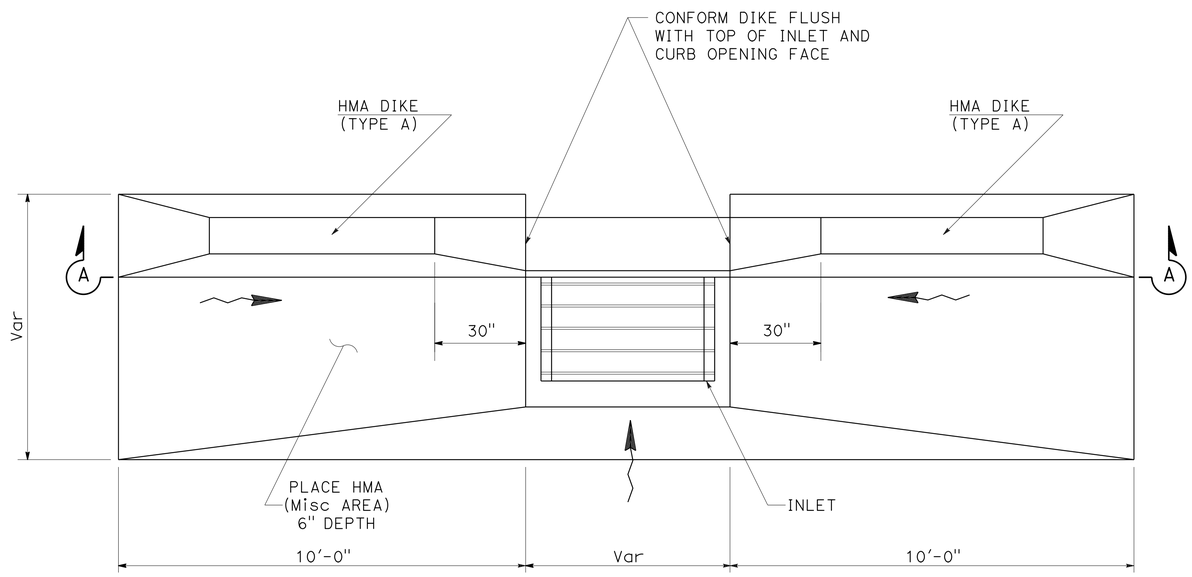

PLAN

HMA APRON

DRAINAGE SYSTEM No.	ROUTE	PM
1	128	30.14
6	128	35.42
7	128	35.48
9	128	38.77

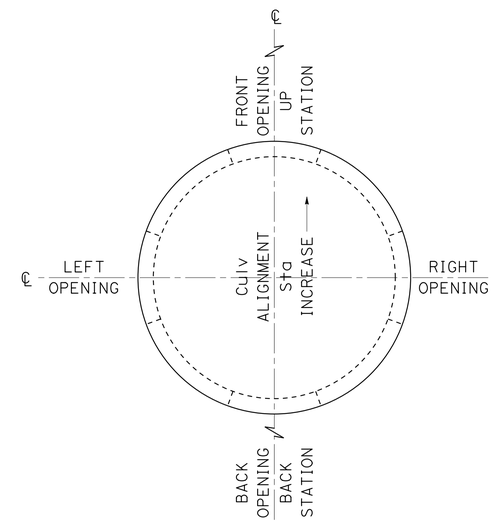

PLAN

INLET (TYPE OMP) SIDE OPENINGS

DRAINAGE SYSTEM No.	ROUTE	PM	BACK	LEFT	RIGHT	FRONT
8	128	35.94	1		1	
22	128	48.44			1	1

DRAINAGE DETAILS

NO SCALE

DD-2

STATE OF CALIFORNIA - DEPARTMENT OF TRANSPORTATION
Caltrans
03-DESIGN

FUNCTIONAL SUPERVISOR: SCOTT MANN
CALCULATED-DESIGNED BY: W. KEITH MACK
CHECKED BY: SARJU D. PATEL
REVISED BY
DATE REVISED

LAST REVISION 08-17-11
DATE PLOTTED => 28-APR-2016
TIME PLOTTED => 18:37

Dist	COUNTY	ROUTE	POST MILES TOTAL PROJECT	SHEET No.	TOTAL SHEETS
01	Men	128	30.1/48.5	27	52

REGISTERED CIVIL ENGINEER 4-25-16 DATE

PLANS APPROVAL DATE 4-25-16

REGISTERED PROFESSIONAL ENGINEER KENNETH KEATON No. 45864 Exp. 12-31-16 CIVIL STATE OF CALIFORNIA

THE STATE OF CALIFORNIA OR ITS OFFICERS OR AGENTS SHALL NOT BE RESPONSIBLE FOR THE ACCURACY OR COMPLETENESS OF SCANNED COPIES OF THIS PLAN SHEET.

NOTE:

1. PLACE MARKER Min 2.0' AND Max 12.0' FROM EP, EXACT LOCATION TO BE DETERMINED BY THE ENGINEER.

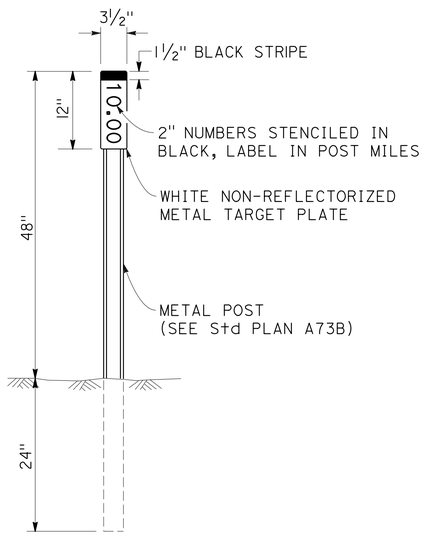

MARKER (CULVERT)

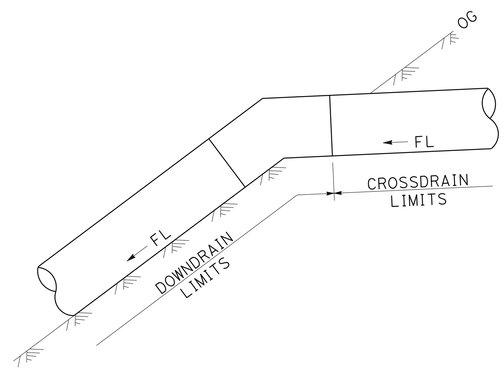

LIMITS OF MEASUREMENT FOR PAYMENT

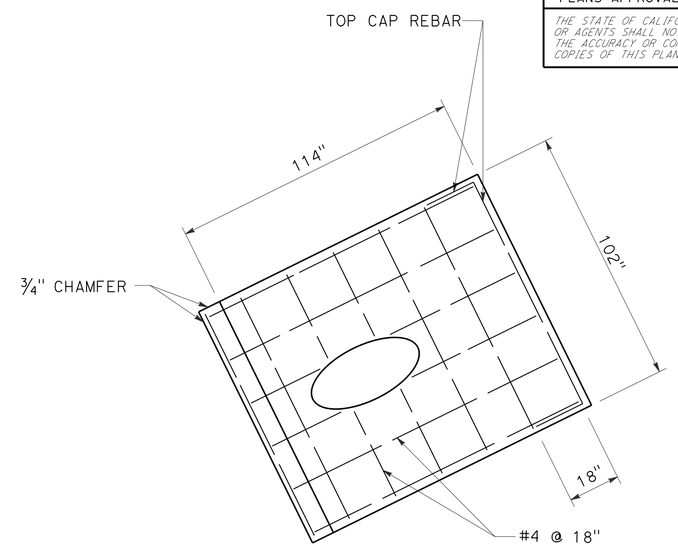

TOP VIEW

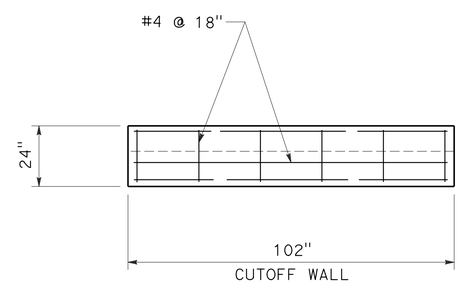

FRONT VIEW

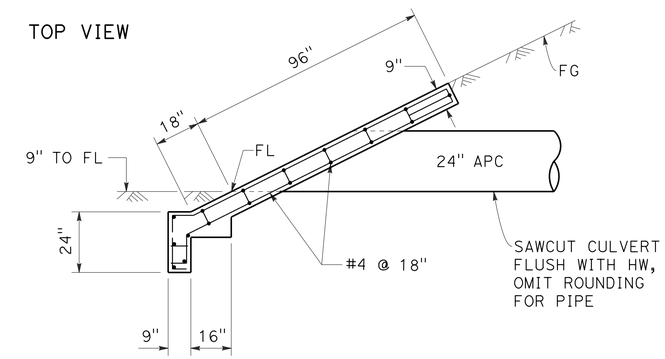

TYPICAL SECTION

SLOPED HEADWALL

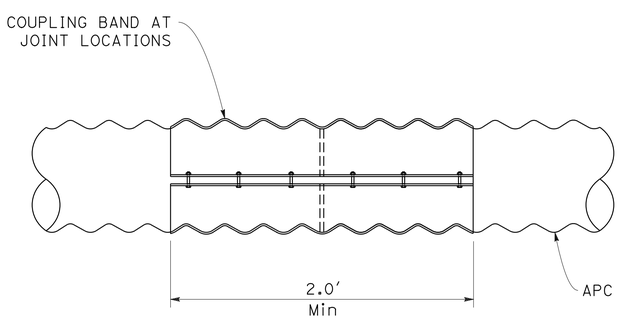

JOINT COUPLING BAND

DRAINAGE SYSTEM No.	PM
20	47.97

DRAINAGE DETAILS

NO SCALE

DD-3

STATE OF CALIFORNIA - DEPARTMENT OF TRANSPORTATION

Caltrans® 03-DESIGN

FUNCTIONAL SUPERVISOR: SCOTT MANN

CALCULATED-DESIGNED BY: SARJU D. PATEL

CHECKED BY: W. KEITH MACK

REVISED BY / DATE REVISED

LAST REVISION 08-17-11

DATE PLOTTED => 28-APR-2016

TIME PLOTTED => 18:37

Dist	COUNTY	ROUTE	POST MILES TOTAL PROJECT	SHEET No.	TOTAL SHEETS
01	Men	128	30.1/48.5	28	52

REGISTERED CIVIL ENGINEER 4-25-16 DATE

4-25-16
PLANS APPROVAL DATE

REGISTERED PROFESSIONAL ENGINEER KENNETH KEATON No. 45864 Exp. 12-31-16 CIVIL STATE OF CALIFORNIA

THE STATE OF CALIFORNIA OR ITS OFFICERS OR AGENTS SHALL NOT BE RESPONSIBLE FOR THE ACCURACY OR COMPLETENESS OF SCANNED COPIES OF THIS PLAN SHEET.

NOTES:
1. PROVIDE MINIMUM LAP.
2. PROVIDE A MINIMUM OF 2 "A" BARS AND 2 "B" BARS EACH SIDE OF OPENING (1 EACH FACE.)
3. SPACE AT 3 BAR DIAMETERS (OR 3" MINIMUM) ON CENTER.
4. SEE STANDARD PLAN SHEET D75A FOR INLET OPENING DETAILS.

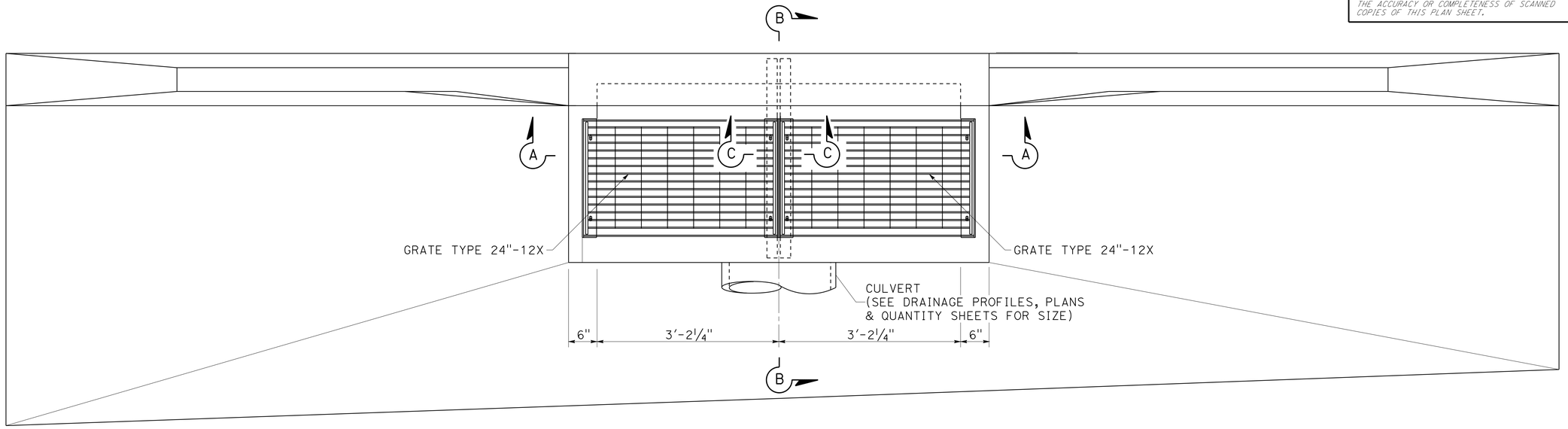

PLAN

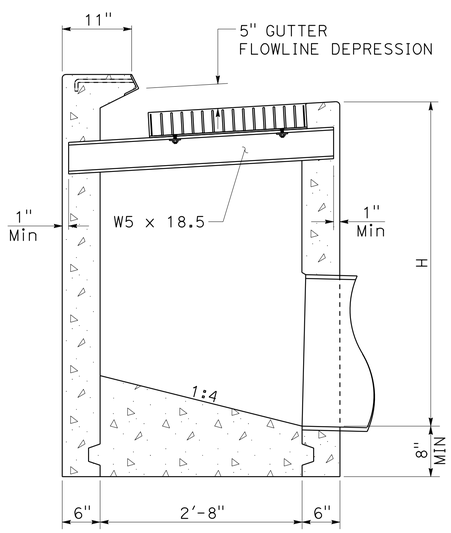

SECTION B-B

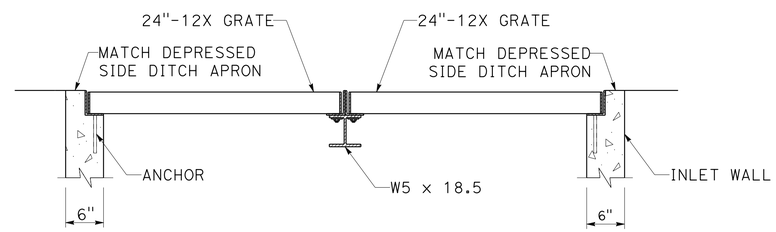

SECTION A-A

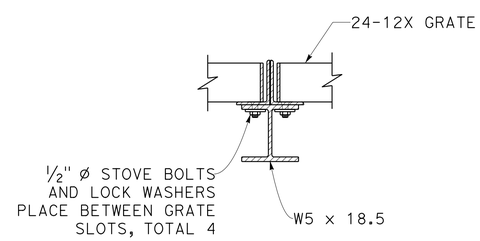

SECTION C-C

TYPE DOUBLE GO DI

(SEE STANDARD PLAN SHEET D74B FOR INFORMATION NOT SHOWN)

TABLE A
CONCRETE QUANTITIES

TYPE	H=3.0' TO 8.0' (T=6")	
	H=3.0' (CY)	ADDITIONAL PCC PER Ft (CY)
Dbl-GO	2.18	0.37

TABLE BASED ON 8" FLOOR SLAB, NO DEDUCTION FOR PIPE OPENINGS, AND CURB TYPE GIVING HIGHEST QUANTITY OF CONCRETE. NO DEDUCTIONS OR ADJUSTMENTS ARE TO BE MADE TO THESE QUANTITIES BECAUSE OF PIPE OPENINGS, DIFFERENT FLOOR ALTERNATIVES OR DIFFERENT CURB TYPES.

TABLE B

CURB TYPE	NORMAL CURB HEIGHT	CURB BATTER	"b" DIMENSION
"A" Dike	6"	3"	11"

DRAINAGE DETAILS

NO SCALE

DD-4

STATE OF CALIFORNIA - DEPARTMENT OF TRANSPORTATION
03-DESIGN
FUNCTIONAL SUPERVISOR: SCOTT MANN
CALCULATED-DESIGNED BY: W. KEITH MACK
CHECKED BY: SARJU D. PATEL
REVISED BY
DATE REVISED

LAST REVISION 08-17-11
DATE PLOTTED => 28-APR-2016
TIME PLOTTED => 18:37

Dist	COUNTY	ROUTE	POST MILES TOTAL PROJECT	SHEET No.	TOTAL SHEETS
01	Men	128	30.1/48.5	29	52

REGISTERED CIVIL ENGINEER 4-25-16 DATE

4-25-16
PLANS APPROVAL DATE

REGISTERED PROFESSIONAL ENGINEER KENNETH KEATON No. 45864 Exp. 12-31-16 CIVIL STATE OF CALIFORNIA

THE STATE OF CALIFORNIA OR ITS OFFICERS OR AGENTS SHALL NOT BE RESPONSIBLE FOR THE ACCURACY OR COMPLETENESS OF SCANNED COPIES OF THIS PLAN SHEET.

NOTE:

SEE STANDARD PLAN RSP D-73
FOR DETAILS NOT SHOWN.

DRAINAGE SYSTEM No.	LOCATION ROUTE	LOCATION PM	HEIGHT (H)
16	128	44.85	3' 0"

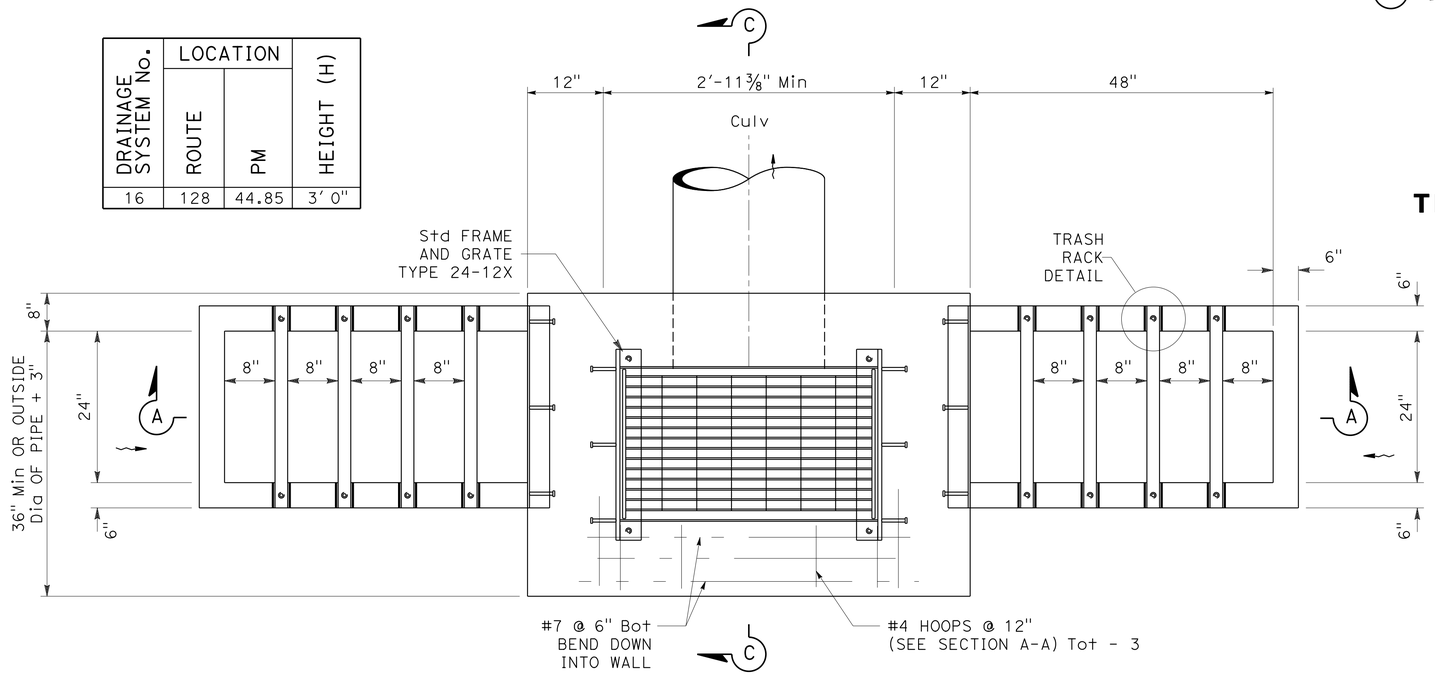

PLAN

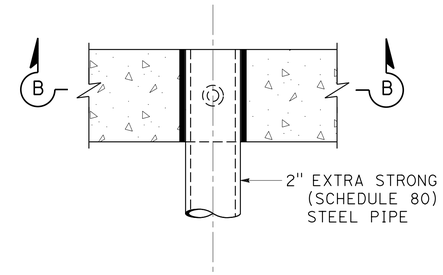

TRASH RACK DETAIL

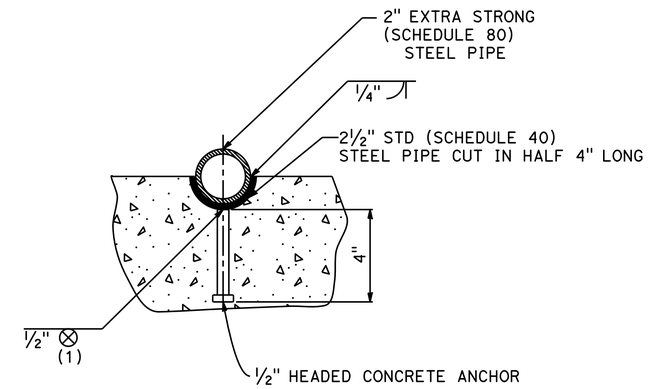

SECTION B-B

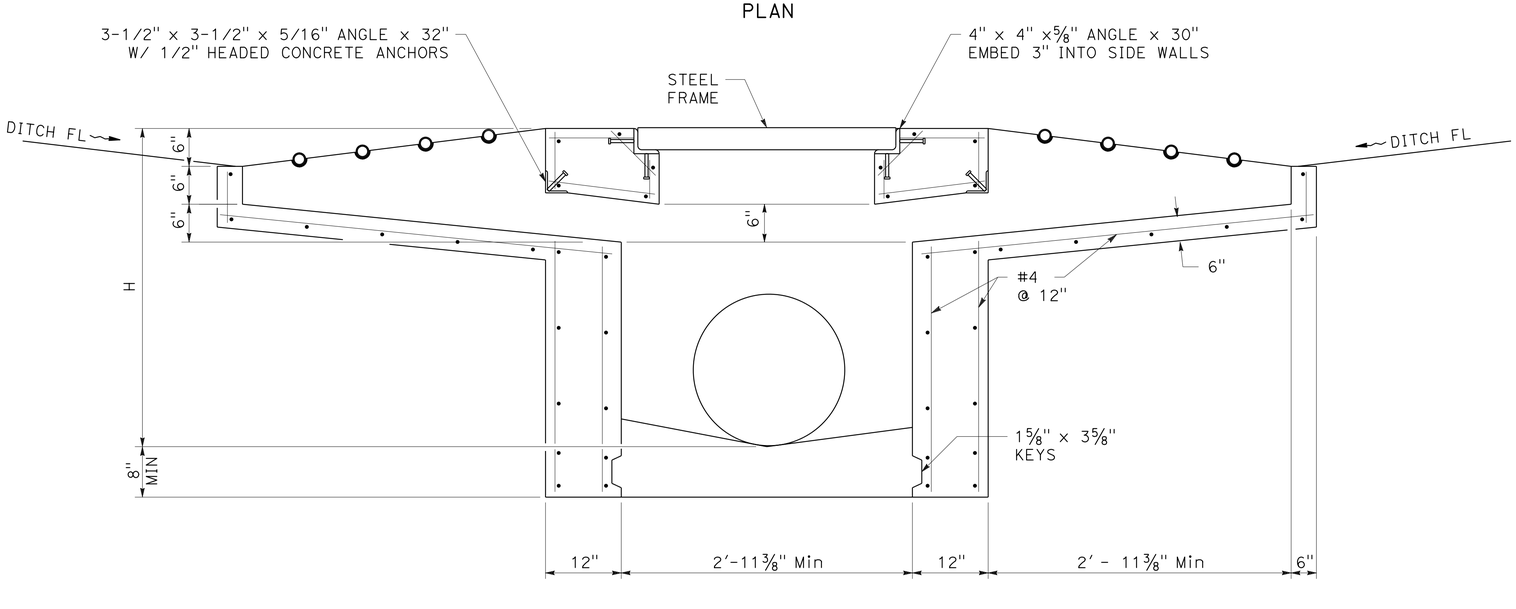

SECTION A-A

TYPE G2 (Mod) DI

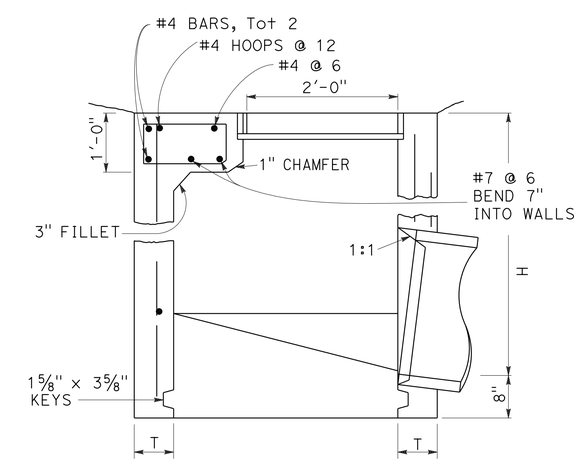

SECTION C-C

DRAINAGE DETAILS
NO SCALE

DD-5

STATE OF CALIFORNIA - DEPARTMENT OF TRANSPORTATION
Caltrans
03-DESIGN
FUNCTIONAL SUPERVISOR: SCOTT MANN
CALCULATED-DESIGNED BY: W. KEITH MACK
CHECKED BY: SARJU D. PATEL
REVISED BY
DATE REVISED

LAST REVISION 00-00-00
DATE PLOTTED => 28-APR-2016
TIME PLOTTED => 18:37

Dist	COUNTY	ROUTE	POST MILES TOTAL PROJECT	SHEET No.	TOTAL SHEETS
01	Men	128	30.1/48.5	30	52

REGISTERED CIVIL ENGINEER 4-25-16 DATE

4-25-16
PLANS APPROVAL DATE

REGISTERED PROFESSIONAL ENGINEER KENNETH KEATON No. 45864 Exp. 12-31-16 CIVIL STATE OF CALIFORNIA

THE STATE OF CALIFORNIA OR ITS OFFICERS OR AGENTS SHALL NOT BE RESPONSIBLE FOR THE ACCURACY OR COMPLETENESS OF SCANNED COPIES OF THIS PLAN SHEET.

NOTES:

1. DOWNDRAINS AND FLARED END SECTIONS SHALL BE SAME MATERIAL AS CULVERT.
2. ALL CULVERT PIPE JOINTS ARE POSITIVE JOINT TYPE.
3. THE JOINT CLASSIFICATION FOR DOWNDRAINS SHALL BE DOWNDRAIN.
4. LENGTHS OF PIPES AND ANGLES OF ELBOWS SHALL BE VERIFIED IN THE FIELD BY THE CONTRACTOR.
5. FOR MINIMUM ALLOWABLE CLASS OF RCP, SEE STANDARD PLAN A62D.

ALTERNATIVE PIPE CULVERT (APC), DOWNDRAIN (AP DD) AND FLARED END SECTION (AFES) ALLOWABLE PIPE MATERIAL AND PROTECTION

DRAINAGE SYSTEM No. (PLAN SHEET No.)	ROUTE	PM	Galv CSP					RCP	CAP 0.060" (16 Ga) THICK
			0.109" (12 Ga) THICK	0.138" (10 Ga) THICK	0.169" (8 Ga) THICK	POLYMERIC Sht COATED 0.079" (14 Ga) THICK	POLYMERIC Sht COATED 0.109" (12 Ga) THICK		
1	128	30.14		X		X		X *	X
2	128	30.57		X		X		X *	X
3	128	31.03	X			X		X *	X
4	128	31.09		X			X	X *	X
5	128	31.26		X			X	X *	X
6	128	35.42	X			X		X *	X
7	128	35.48	X			X		X *	X
8	128	35.94			X		X	X *	X
9	128	38.52		X		X		X *	X
10	128	40.52		X		X		X *	X
11	128	40.75		X		X		X *	X
12	128	41.12		X			X	X *	X
13	128	41.35		X		X		X *	X
14	128	42.81		X			X	X *	X
15	128	43.16	X			X		X *	X
16	128	44.85	X			X		X *	X
17	128	46.66	X			X		X **	X
18	128	47.52	X				X	X *	X
19	128	47.71	X			X		X **	X
20	128	47.97		X		X		X *	X
21	128	48.30		X		X		X *	X
22	128	48.44		X		X		X *	X

* TYPE IP (MS) MODIFIED CEMENT OR TYPE II MODIFIED CEMENT. MAXIMUM WATER-TO-CEMENTITIOUS MATERIAL RATIO OF 0.45.

** TYPE II MODIFIED CEMENT OR TYPE V CEMENT 675 LB/CY WITH 25% MINERAL ADMIXTURE REPLACEMENT (BY WEIGHT). MAXIMUM WATER-TO-CEMENTITIOUS MATERIAL RATIO OF 0.40.

DRAINAGE QUANTITIES

DQ-1

REVISED BY | DATE REVISED

W. KEITH MACK | SARJU D. PATEL

CALCULATED-DESIGNED BY | CHECKED BY

FUNCTIONAL SUPERVISOR: SCOTT MANN

STATE OF CALIFORNIA - DEPARTMENT OF TRANSPORTATION

Caltrans® 03-DESIGN

LAST REVISION 08-17-11 | DATE PLOTTED => 28-APR-2016 | TIME PLOTTED => 18:37

Dist	COUNTY	ROUTE	POST MILES TOTAL PROJECT	SHEET No.	TOTAL SHEETS
01	Men	128	30.1/48.5	31	52

REGISTERED CIVIL ENGINEER 4-25-16 DATE

4-25-16
PLANS APPROVAL DATE

REGISTERED PROFESSIONAL ENGINEER KENNETH KEATON No. 45864 Exp. 12-31-16 CIVIL STATE OF CALIFORNIA

THE STATE OF CALIFORNIA OR ITS OFFICERS OR AGENTS SHALL NOT BE RESPONSIBLE FOR THE ACCURACY OR COMPLETENESS OF SCANNED COPIES OF THIS PLAN SHEET.

DRAINAGE QUANTITIES

DRAINAGE SYSTEM No. (PLAN Sht No.)	DRAINAGE UNIT No.	ROUTE	PM	REMOVE INLET EA	REMOVE Culv EA	REMOVE DD EA	REMOVE HW EA	REMOVE Conc CY	ABANDON Culv EA	(N) SAND BACKFILL CY	6" CSP CONDUIT (.064" THICK) LF	2" PP (SCHEDULE 40) (SUPPLY LINE) LF	18" APC LF	24" APC LF	30" APC LF	12" AP DD LF	12" DD SLIP JOINT LF	24" AP DD LF	30" AP DD LF	12" ENTRANCE TAPER EA	(N) APC ELBOW EA	ANCHOR ASSEMBLY EA	24" AFES EA	RSP (LIGHT, METHOD B) CY	RSP FABRIC SQYD	CONCRETED-RSP (FACING, METHOD A) CY	36" CSP INLET (.168 THICK) LF	(N) H OF INLET LF	MINOR CONCRETE (MINOR STRUCTURE) CY	Misc I & S LB	(N) Max COVER LF	MARKER (Culv) EA	DESCRIPTION	DRAINAGE UNIT No.	DRAINAGE SYSTEM No. (PLAN Sht No.)
1	a	128	30.14	1																								3.7					REMOVE INLET	a	1
	b						1																										REMOVE HW	b	
	c					1																											REMOVE DD (18" X 21.1')	c	
	d				1																												REMOVE Culv (18" x 40.2' CMP)	d	
	e													49.7																	3.2	2	24" APC	e	
	f																												1.20				24" HW	f	
	g																											3.7	1.41	239			TYPE GO DI W/TYPE 24-12X GRATE	g	
	h																	21.1			2												24" AP DD	h	
	i																												1.20				24" HW	i	
2	a	128	30.57		1																												REMOVE Culv (18" x 48.5' CMP)	a	2
	b												56.3																		1.7	2	18" APC	b	
	c																												0.91				18" HW	c	
3	a	128	31.03		1																												REMOVE Culv (18" x 55.2' CMP)	a	3
	b					1																											REMOVE DD (18" X 29.5' CMP)	b	
	c														55.3																5.2	2	30" APC	c	
	d																		30.2		1	2											30" AP DD	d	
	e																							42.60	70.0								RSP (LIGHT, METHOD B)	e	
	f																							8.0	24.4								RSP (LIGHT, METHOD B)	f	
4	a	128	31.09		1																												REMOVE Culv (15" x 54.0' CMP)	a	4
	b						1																										REMOVE HW	b	
	c													54.6																	6.9	2	24" APC	c	
	d																												1.20				24" HW	d	
5	a	128	31.26		1																												REMOVE Culv (18" x 7.5' CMP)	a	5
	b				1																												REMOVE Culv (18" x 3.5' CMP)	b	
	c								1	4.75																							ABANDON Culv (18" X 72.5' CMP)	c	
	d													65.1																	7.5	2	24" APC	d	
	e																												1.20				24" HW	e	
	f																							6.22	20.0								RSP (LIGHT, METHOD B)	f	
	g																	20.3			1	2											24" AP DD	g	
Sht DQ-2 TOTALS				1	6	2	2		1	4.75			56.3	169.4	55.3			41.4	30.2		4	4		56.82	114.4				7.12	239		10			

(N) = NOT A SEPARATE PAY ITEM, FOR INFORMATION ONLY.

DRAINAGE QUANTITIES

DQ-2

STATE OF CALIFORNIA - DEPARTMENT OF TRANSPORTATION
03-DESIGN
Caltrans

FUNCTIONAL SUPERVISOR: SCOTT MANN
CALCULATED-DESIGNED BY: W. KEITH MACK
CHECKED BY: SARJU D. PATEL
REVISED BY
DATE REVISED

LAST REVISION 08-17-11
DATE PLOTTED => 28-APR-2016
TIME PLOTTED => 18:37

Dist	COUNTY	ROUTE	POST MILES TOTAL PROJECT	SHEET No.	TOTAL SHEETS
01	Men	128	30.1/48.5	32	52

REGISTERED CIVIL ENGINEER 4-25-16 DATE

4-25-16
PLANS APPROVAL DATE

REGISTERED PROFESSIONAL ENGINEER KENNETH KEATON No. 45864 Exp. 12-31-16 CIVIL STATE OF CALIFORNIA

THE STATE OF CALIFORNIA OR ITS OFFICERS OR AGENTS SHALL NOT BE RESPONSIBLE FOR THE ACCURACY OR COMPLETENESS OF SCANNED COPIES OF THIS PLAN SHEET.

DRAINAGE QUANTITIES

DRAINAGE SYSTEM No. (PLAN Sht No.)	DRAINAGE UNIT No.	ROUTE	PM	REMOVE INLET EA	REMOVE Culv EA	REMOVE DD EA	REMOVE HW EA	REMOVE Conc CY	ABANDON Culv EA	(N) SAND BACKFILL CY	6" CSP CONDUIT (.064" THICK) LF	2" PP (SCHEDULE 40) (SUPPLY LINE) LF	18" APC LF	24" APC LF	30" APC LF	12" AP DD LF	12" DD SLIP JOINT LF	24" AP DD LF	30" AP DD LF	12" ENTRANCE TAPER EA	(N) APC ELBOW EA	ANCHOR ASSEMBLY EA	24" AFES EA	RSP (LIGHT, METHOD B) CY	RSP FABRIC SQYD	CONCRETED-RSP (FACING, METHOD A) CY	36" CSP INLET (.168 THICK) LF	(N) H OF INLET LF	MINOR CONCRETE (MINOR STRUCTURE) CY	Misc I & S LB	(N) Max COVER LF	MARKER (Culv) EA	DESCRIPTION	DRAINAGE UNIT No.	DRAINAGE SYSTEM No. (PLAN Sht No.)
6	a	128	35.42		1																												REMOVE Culv (18" x 40.0' CMP)	a	6
	b			1																								4.1					REMOVE INLET	b	
	c													45.4																	4.6	2	24" APC	c	
	d																											3.5	1.36	239			TYPE GO DI W/TYPE 24-12X GRATE	d	
7	a	128	35.48		1																												REMOVE Culv (18" x 37.3' CMP)	a	7
	b			1																								4.1					REMOVE INLET	b	
	c													44.0																	3.7	2	24" APC	c	
	d																											3.5	2.37	478			TYPE Dbl-GO DI W/2 TYPE 24-12X GRATES	d	
8	a	128	35.94		1																												REMOVE Culv (18" x 40.7' CMP)	a	8
	b			1																								3.0					REMOVE INLET	b	
	c													51.1																	6.9	2	24" APC	c	
	d																										4.5	4.0	0.47	215			TYPE OMP PIPE INLET W/ TYPE 36RX GRATE	d	
	e																						1										24" AFES	e	
	f																							2.24	10.7								RSP (LIGHT, METHOD B)	f	
	g																							6.22	20.0								RSP (LIGHT, METHOD B)	g	
9	a	128	38.77		1																												REMOVE Culv (18" x 35.4' CMP)	a	9
	b			1																								2.7					REMOVE INLET	b	
	c													38.6																	2.6	2	24" APC	c	
	d																											4.4	1.58	239			TYPE GO DI W/TYPE 24-12X GRATE	d	
	e							0.95																									REMOVE WALL	e	
	f																								20.5	4.59							CONCRETED-RSP (FACING, METHOD A)	f	
	g																							6.22	20.0								RSP (LIGHT, METHOD B)	g	
	h																							3.11	12.2								RSP (LIGHT, METHOD B)	h	
10	a	128	40.52		1																												REMOVE Culv (18" x 41.0' CMP)	a	10
	b						1																										REMOVE HW	b	
	c													46.0																	2.6	2	24" APC	c	
	d																												1.20				24" HW	d	
11	a	128	40.75		1																												REMOVE Culv (18" x 39.0' CMP)	a	11
	b						1																										REMOVE HW	b	
	c													39.8																	2.3	2	24" APC	c	
	d																												1.20				24" HW	d	
Sht DQ-3 TOTALS				4	6		2	0.95						264.9									1	17.79	83.4	4.59	4.5		8.18	1171		12			

(N) = NOT A SEPARATE PAY ITEM, FOR INFORMATION ONLY.

DRAINAGE QUANTITIES

DQ-3

STATE OF CALIFORNIA - DEPARTMENT OF TRANSPORTATION
03-DESIGN
Caltrans

W. KEITH MACK — REVISED BY
SARJU D. PATEL — DATE REVISED
CALCULATED-DESIGNED BY
CHECKED BY
FUNCTIONAL SUPERVISOR
SCOTT MANN

LAST REVISION 08-17-11
DATE PLOTTED => 28-APR-2016
TIME PLOTTED => 18:37

Dist	COUNTY	ROUTE	POST MILES TOTAL PROJECT	SHEET No.	TOTAL SHEETS
01	Men	128	30.1/48.5	33	52

REGISTERED CIVIL ENGINEER 4-25-16 DATE

PLANS APPROVAL DATE 4-25-16

REGISTERED PROFESSIONAL ENGINEER KENNETH KEATON No. 45864 Exp. 12-31-16 CIVIL STATE OF CALIFORNIA

THE STATE OF CALIFORNIA OR ITS OFFICERS OR AGENTS SHALL NOT BE RESPONSIBLE FOR THE ACCURACY OR COMPLETENESS OF SCANNED COPIES OF THIS PLAN SHEET.

DRAINAGE QUANTITIES

DRAINAGE SYSTEM No. (PLAN Sht No.)	DRAINAGE UNIT No.	ROUTE	PM	REMOVE INLET EA	REMOVE Culv EA	REMOVE DD EA	REMOVE HW EA	REMOVE Conc CY	ABANDON Culv EA	(N) SAND BACKFILL CY	6" CSP CONDUIT (.064" THICK) LF	2" PP (SCHEDULE 40) (SUPPLY LINE) LF	18" APC LF	24" APC LF	30" APC LF	12" AP DD LF	12" DD SLIP JOINT LF	24" AP DD LF	30" AP DD LF	12" ENTRANCE TAPER EA	(N) APC ELBOW EA	ANCHOR ASSEMBLY EA	24" AFES EA	RSP (LIGHT, METHOD B) CY	RSP FABRIC SQYD	CONCRETED-RSP (FACING, METHOD A) CY	36" CSP INLET (.168 THICK) LF	(N) H OF INLET LF	MINOR CONCRETE (MINOR STRUCTURE) CY	Misc I & S LB	(N) Max COVER LF	MARKER (Culv) EA	DESCRIPTION	DRAINAGE UNIT No.	DRAINAGE SYSTEM No. (PLAN Sht No.)
12	a	128	41.12		1																												REMOVE Culv (18" x 40.6' CMP)	a	12
	b						1																										REMOVE HW	b	
	c													47.7																	3.9	2	24" APC	c	
	d																												1.20				24" HW	d	
	e																						11.85	39.1									RSP (LIGHT, METHOD B)	e	
	f																						1.48	8.0									RSP (LIGHT, METHOD B)	f	
13	a	128	41.35		1																												REMOVE Culv (18" x 41.6' CMP)	a	13
	b						1																										REMOVE HW	b	
	c													47.8																	5.9	2	24" APC	c	
	d																												1.20				24" HW	d	
	e																						6.22	20.0									RSP (LIGHT, METHOD B)	e	
14	a	128	42.81											76.5																	5.0	2	24" APC	a	14
15	a	128	43.16		1																												REMOVE Culv (18" x 58.4' CMP)	a	15
	b						1																										REMOVE HW	b	
	c													59.6																	2.0	2	24" APC	c	
	d																												1.20				24" HW	d	
16	a	128	44.85		1																												REMOVE Culv (18" x 32.9' CMP)	a	16
	b													34.2																	2.4	2	24" APC	b	
	c																											3.0	1.82	239			TYPE G2 (Mod) DI W/TYPE 24-12X GRATE	c	
	d																						4.44	15.6									RSP (LIGHT, METHOD B)	d	
	e										38.0																						6" CMP		
	f											39.0																					2" PP (SCHEDULE 40)		
17	a	128	46.66		1																												REMOVE Culv (18" x 45.8' CMP)	a	17
	b					1																											REMOVE DD (12" X 18.9')	b	
	c													46.0																	3.7	2	24" APC	c	
	d																	24.4			1	2											24" AP DD	d	
	e																			1													12" ENTRANCE TAPER, TYPE 1 Alt B	e	
	f															24.7	1					2											12" AP DD	f	
	g																						6.22	20.0									RSP (LIGHT, METHOD B)	g	
	h																						7.40	25.8									RSP (LIGHT, METHOD B), ROCK LINED DITCH	h	
Sht DQ-4 TOTALS					5	1	3				38.0	39.0		311.8		24.7	1	24.4		1	1	4		37.61	128.5				5.42	239		12			

(N) = NOT A SEPARATE PAY ITEM, FOR INFORMATION ONLY.

DRAINAGE QUANTITIES

DQ-4

STATE OF CALIFORNIA - DEPARTMENT OF TRANSPORTATION

03-DESIGN

Caltrans

W. KEITH MACK — REVISED BY

SARJU D. PATEL — DATE REVISED

CALCULATED-DESIGNED BY

CHECKED BY

FUNCTIONAL SUPERVISOR

SCOTT MANN

LAST REVISION 08-17-11

DATE PLOTTED => 28-APR-2016

TIME PLOTTED => 18:37

Dist	COUNTY	ROUTE	POST MILES TOTAL PROJECT	SHEET No.	TOTAL SHEETS
01	Men	128	30.1/48.5	34	52

REGISTERED CIVIL ENGINEER 4-25-16 DATE

PLANS APPROVAL DATE 4-25-16

REGISTERED PROFESSIONAL ENGINEER KENNETH KEATON No. 45864 Exp. 12-31-16 CIVIL STATE OF CALIFORNIA

THE STATE OF CALIFORNIA OR ITS OFFICERS OR AGENTS SHALL NOT BE RESPONSIBLE FOR THE ACCURACY OR COMPLETENESS OF SCANNED COPIES OF THIS PLAN SHEET.

DRAINAGE QUANTITIES

DRAINAGE SYSTEM No. (PLAN Sht No.)	DRAINAGE UNIT No.	ROUTE	PM	REMOVE INLET EA	REMOVE Culv EA	REMOVE DD EA	REMOVE HW EA	REMOVE Conc CY	ABANDON Culv EA	(N) SAND BACKFILL CY	6" CSP CONDUIT (.064" THICK) LF	2" PP (SCHEDULE 40) (SUPPLY LINE) LF	18" APC LF	24" APC LF	30" APC LF	12" AP DD LF	12" DD SLIP JOINT LF	24" AP DD LF	30" AP DD LF	12" ENTRANCE TAPER EA	(N) APC ELBOW EA	ANCHOR ASSEMBLY EA	24" AFES EA	RSP (LIGHT, METHOD B) CY	RSP FABRIC SQYD	CONCRETED-RSP (FACING, METHOD A) CY	36" CSP INLET (.168 THICK) LF	(N) H OF INLET LF	MINOR CONCRETE (MINOR STRUCTURE) CY	Misc I & S LB	(N) Max COVER LF	MARKER (Culv) EA	DESCRIPTION	DRAINAGE UNIT No.	DRAINAGE SYSTEM No. (PLAN Sht No.)
18	a	128	47.52		1																												REMOVE Culv (18" x 51.9' CMP)	a	18
	b						1																										REMOVE HW	b	
	c													58.1																	2.7	2	24" APC	c	
	d																												1.20				24" HW	d	
	e																						6.22	20.0									RSP (LIGHT, METHOD B)	e	
19	a	128	47.71		1																												REMOVE Culv (18" x 57.6' CMP)	a	19
	b													62.2																	4.1	2	24" APC	b	
	c																						4.0	14.4									RSP (LIGHT, METHOD B)	c	
	d																						6.22	20.0									RSP (LIGHT, METHOD B)	d	
20	a	128	47.97		1																												REMOVE Culv (18" x 40.4' CMP)	a	20
	b													42.8																	2.6	2	24" APC	b	
	c																												2.86				24" SLOPED HW	c	
	d																						3.69	13.7									RSP (LIGHT, METHOD B)	d	
21	a	128	48.30		1																												REMOVE Culv (18" x 40.2' CMP)	a	21
	b													44.8																	2.5	2	24" APC	b	
	c																					1											24" AFES	c	
	d																						4.89	16.7									RSP (LIGHT, METHOD B)	d	
22	a	128	48.44		1																												REMOVE Culv (18" x 50.7' CMP)	a	22
	b													52.6																	2.8	2	24" APC	b	
	c																									4.0	3.5	0.47	215				TYPE OMP PIPE INLET W/ TYPE 36RX GRATE	c	
Sht DQ-5 TOTALS					5		1							260.5								1	25.02	84.8		4.0		4.53	215		10				
Sht DQ-2 TOTALS				1	6	2	2		1	4.75				169.4	55.3			41.4	30.2		4	4		56.82	114.4				7.12	239		10			
Sht DQ-3 TOTALS				4	6		2	0.95						264.9									1	17.79	62.9	4.59	4.5		8.18	1171		12			
Sht DQ-4 TOTALS					5	1	3				38.0	39.0		311.8		24.7	1	24.4		1	1	4		37.61	128.5				5.42	239		12			
GRAND TOTALS				5	22	3	8	0.95	1	4.75	38.0	39.0	56.3	1006.6	55.3	24.7	1	65.8	30.2	1	5	8	2	137.24	390.6	4.59	8.5		25.25	1864		44			

(N) = NOT A SEPARATE PAY ITEM, FOR INFORMATION ONLY.

Dist	COUNTY	ROUTE	POST MILES TOTAL PROJECT	SHEET No.	TOTAL SHEETS
01	Men	128	30.1/48.5	35	52

REGISTERED CIVIL ENGINEER 4-25-16 DATE

PLANS APPROVAL DATE 4-25-16

REGISTERED PROFESSIONAL ENGINEER KENNETH KEATON No. 45864 Exp. 12-31-16 CIVIL STATE OF CALIFORNIA

THE STATE OF CALIFORNIA OR ITS OFFICERS OR AGENTS SHALL NOT BE RESPONSIBLE FOR THE ACCURACY OR COMPLETENESS OF SCANNED COPIES OF THIS PLAN SHEET.

NOTES:

1. THIS PLAN ACCURATE FOR CONSTRUCTION AREA SIGN WORK ONLY.
2. C23B(CA) SHAL HAVE BLACK LETTERS ON ORANGE BACKGROUND.
3. EXACT SIGN LOCATIONS TO BE DETERMINED BY THE ENGINEER.

LEGEND

SIGN - ONE POST

SIGN - TWO POST

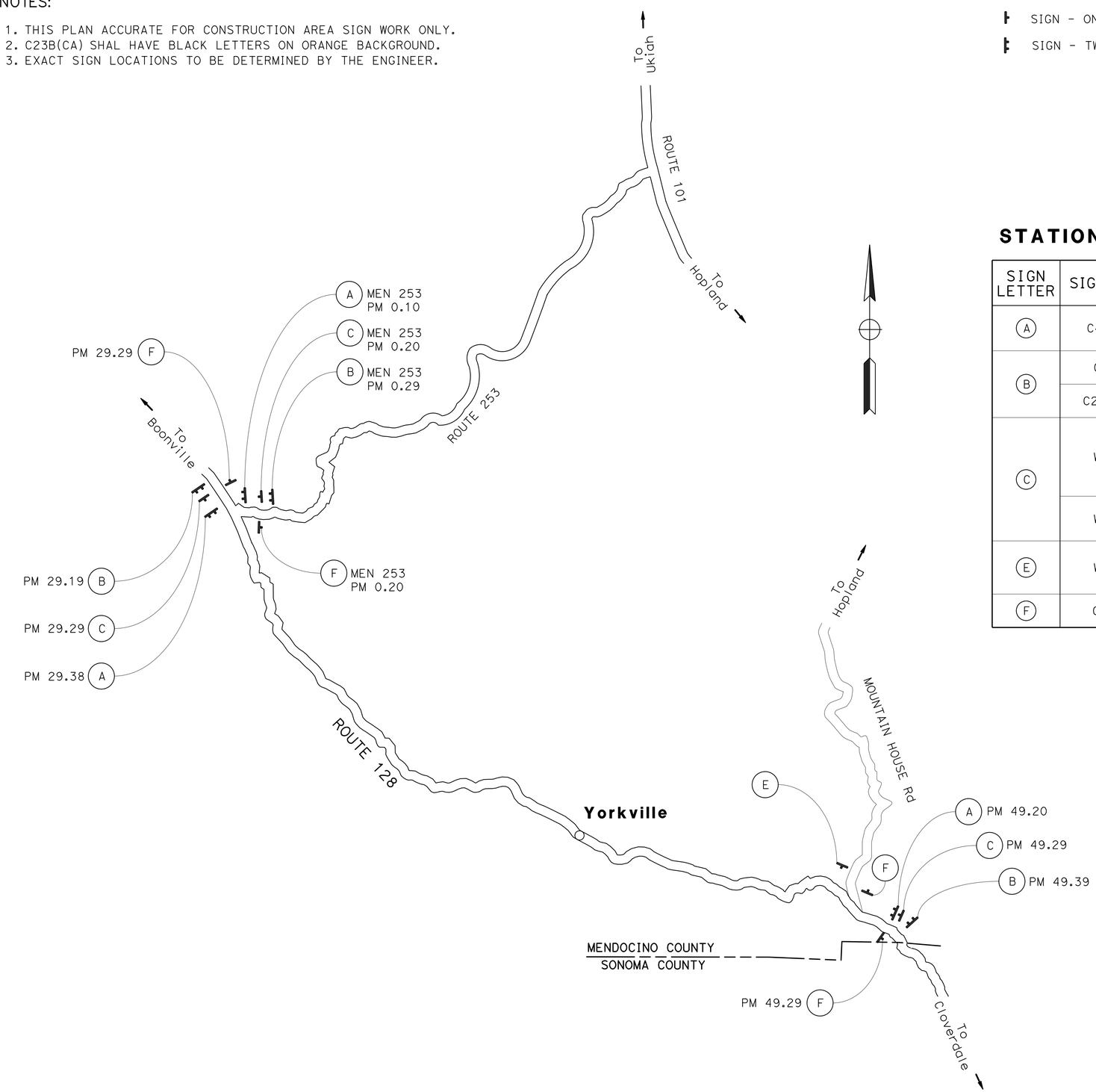

STATIONARY MOUNTED CONSTRUCTION AREA SIGNS

SIGN LETTER	SIGN CODE	SIGN MESSAGE	PANEL SIZE	No. OF POSTS AND SIZE	No. OF SIGNS
A	C40(CA)	TRAFFIC FINES DOUBLED IN CONSTRUCTION ZONES	108" x 42"	2 - 6" x 8"	3
B	G20-1	ROAD WORK NEXT 20 MILES	60" x 36"	2 - 6" x 6"	3
	C23B(CA)	DRAINAGE REHABILITATION	60" x 24"		
C	W11-1		36" x 36"	1 - 6" x 6"	3
	W16-1	SHARE THE ROAD	24" x 30"		
E	W20-1	ROAD WORK AHEAD	48" x 48"	1 - 6" x 6"	1
F	G20-2	END ROAD WORK	36" x 18"	1 - 4" x 4"	4

SP-1

DRAINAGE REHABILITATION 4" D

60" X 24"

CONSTRUCTION AREA SIGNS

NO SCALE

CS-1

STATE OF CALIFORNIA - DEPARTMENT OF TRANSPORTATION

Caltrans 03-DESIGN

FUNCTIONAL SUPERVISOR: SCOTT MANN

CALCULATED-DESIGNED BY: W. KEITH MACK

CHECKED BY: SARJU D. PATEL

REVISED BY

DATE REVISED

LAST REVISION 08-17-11

DATE PLOTTED => 28-APR-2016

TIME PLOTTED => 18:37

Dist	COUNTY	ROUTE	POST MILES TOTAL PROJECT	SHEET No.	TOTAL SHEETS
01	Men	128	30.1/48.5	36	52

REGISTERED CIVIL ENGINEER 4-25-16 DATE

4-25-16
PLANS APPROVAL DATE

REGISTERED PROFESSIONAL ENGINEER KENNETH KEATON No. 45864 Exp. 12-31-16 CIVIL STATE OF CALIFORNIA

THE STATE OF CALIFORNIA OR ITS OFFICERS OR AGENTS SHALL NOT BE RESPONSIBLE FOR THE ACCURACY OR COMPLETENESS OF SCANNED COPIES OF THIS PLAN SHEET.

ROADWAY QUANTITIES

DRAINAGE SYSTEM No.	PM	ROADWAY EXCAVATION	IMPORTED ROCKY MATERIAL	MINOR CONCRETE (BACKFILL)	MINOR HMA	HMA (TYPE A)	PLACE HMA (Misc AREA)
		CY			TON		SQYD
1	30.14		10.67		6.76	4.81	14.3
2	30.57		6.50	6.56	3.59		
3	31.03				9.36		
4	31.09		2.94		6.87		
5	31.26		27.55		7.11		
6	35.42	0.33	3.26	2.62	7.05	3.24	9.6
7	35.48	0.09	4.72		6.62	5.15	15.3
8	35.94		4.18		6.64		
9	38.77	3.09	1.31	3.68	5.29	4.04	12.0
10	40.52	0.41	4.16		6.46		
11	40.75	1.04	2.68	3.14	5.20		
12	41.12	6.17	2.32		6.54		
13	41.35	3.84	1.91		6.42		
14	42.81	2.85	8.82		8.47		
15	43.16	0.91	3.80	7.00	3.70		
16	44.85	1.85		2.68	7.09		
17	46.66	0.74	13.21	4.11	5.53	4.22	12.5
18	47.52		14.47		8.44		
19	47.71		9.52	4.18	6.56		
20	47.97	3.02		3.32	5.08		
21	48.30	0.63	5.45	3.01	5.20		
22	48.44		0.89		7.20		
SUBTOTAL		25.11	128.36	40.30	141.18	21.46	63.7
*PLACE HMA DIKE						3.98	
TOTAL		25.11	128.36	40.30	141.18	25.44	63.7

* - Q†y FROM PLACE HMA DIKE (TYPE A) TABLE

PLACE HMA DIKE

DRAINAGE SYSTEM No.	Loc PM	Loc R†/L†	PLACE HMA DIKE (TYPE A)	PLACE HMA DIKE (TYPE D)	(N) HMA (TYPE A)
			LF	LF	TON
1	30.14	L†	20		0.55
6	35.42	L†	20		0.55
7	35.48	L†	20		0.55
9	38.77	L†	20		0.55
17	46.66	R†		30	1.78
TOTAL			80	30	*3.98

* - Q†y INCLUDED IN THE Rdwy QUANTITIES TABLE
(N) = NOT A SEPARATE PAY ITEM, FOR INFORMATION ONLY.

PAINT TRAFFIC STRIPE

DRAINAGE SYSTEM No.	PM	DETAIL No. 22	DETAIL No. 27B
		LF	LF
1	30.14	7	14
2	30.57	4	8
3	31.03	9	18
4	31.09	7	14
5	31.26	8	16
6	35.42	7	14
7	35.48	7	14
8	35.94	7	14
9	38.77	8	13
10	40.52	7	14
11	40.75	7	13
12	41.12	8	16
13	41.35	7	14
14	42.81	7	14
15	43.16	4	8
16	44.85	8	16
17	46.66	7	12
18	47.52	8	16
19	47.71	8	14
20	47.97	7	11
21	48.30	7	11
22	48.44	8	16
TOTAL		157	300

SUMMARY OF QUANTITIES

Q-1

STATE OF CALIFORNIA - DEPARTMENT OF TRANSPORTATION
Caltrans 03-DESIGN

FUNCTIONAL SUPERVISOR: SCOTT MANN
CALCULATED-DESIGNED BY: W. KEITH MACK
CHECKED BY: SARJU D. PATEL
REVISED BY
DATE REVISED

LAST REVISION 08-17-11
DATE PLOTTED => 28-APR-2016
TIME PLOTTED => 18:37

Dist	COUNTY	ROUTE	POST MILES TOTAL PROJECT	SHEET No.	TOTAL SHEETS
01	Men	128	30.1/48.5	37	52

REGISTERED CIVIL ENGINEER 4-25-16 DATE

4-25-16
PLANS APPROVAL DATE

REGISTERED PROFESSIONAL ENGINEER
KENNETH KEATON
No. 45864
Exp. 12-31-16
CIVIL
STATE OF CALIFORNIA

THE STATE OF CALIFORNIA OR ITS OFFICERS OR AGENTS SHALL NOT BE RESPONSIBLE FOR THE ACCURACY OR COMPLETENESS OF SCANNED COPIES OF THIS PLAN SHEET.

WATER POLLUTION CONTROL

PM	Temp SILT FENCE	Temp CHECK DAM	Temp DI PROTECTION	Temp EROSION CONTROL BLANKET	Temp COVER
	LF	LF	EA	SQYD	SQYD
30.1 - 48.5	220	220	6	371	371
TOTAL	220	220	6	371	371

TEMPORARY FENCE (TYPE ESA)

DRAINAGE SYSTEM No.	LOCATION			TOTAL
	PM	LENGTH, L+	LENGTH, R+	
		LF	LF	LF
1	30.14	30	40	70
3	31.03	35	15	50
4	31.09	35	20	55
5	31.26		80	80
7	35.48		50	50
8	35.94	25	60	85
9	38.77	25		25
10	40.52	55	60	115
11	40.75	30	50	80
12	41.12	40		40
13	41.35	80	30	110
14	42.81	35		35
15	43.16		20	20
17	46.66	30	35	65
18	47.52	35		35
19	47.71	40	35	75
20	47.97		20	20
21	48.30		25	25
22	48.44	20		20
			TOTAL	1055

RECONSTRUCT FENCE

DRAINAGE SYSTEM No.	PM	LENGTH
		LF
3	31.03	30.1
4	31.09	25.9
5	31.26	119.7
14	42.81	27.4
15	43.16	26.3
16	44.85	26.4
19	47.71	36.5
20	47.97	26.6
21	48.30	26.4
TOTAL		345.3

SUMMARY OF QUANTITIES

Q-2

STATE OF CALIFORNIA - DEPARTMENT OF TRANSPORTATION
Caltrans
03-DESIGN

FUNCTIONAL SUPERVISOR: SCOTT MANN
CALCULATED-DESIGNED BY: W. KEITH MACK
CHECKED BY: SARJU D. PATEL
REVISED BY
DATE REVISED

LAST REVISION 08-17-11
DATE PLOTTED => 28-APR-2016
TIME PLOTTED => 18:37

Dist	COUNTY	ROUTE	POST MILES TOTAL PROJECT	SHEET No.	TOTAL SHEETS
01	Men	128	30.1/48.5	38	52

LICENSED LANDSCAPE ARCHITECT
4-25-16
PLANS APPROVAL DATE

THE STATE OF CALIFORNIA OR ITS OFFICERS OR AGENTS SHALL NOT BE RESPONSIBLE FOR THE ACCURACY OR COMPLETENESS OF SCANNED COPIES OF THIS PLAN SHEET.

LICENSED LANDSCAPE ARCHITECT — Laura Lazzarotto — Signature — 8-31-17 Renewal Date — 4-25-16 Date — STATE OF CALIFORNIA

EROSION CONTROL QUANTITIES

DRAINAGE SYSTEM NO.	COUNTY	ROUTE	PM	AREA SQFT (N)	AREA SQFT LT (N)	AREA SQFT RT (N)	WOOD MULCH CY	FIBER ROLLS LF
1	MEN	128	30.14	470	190	280	4.37	38
2	MEN	128	30.57	265	90	175	2.46	18
3	MEN	128	31.03	439	29	410	4.08	27
4	MEN	128	31.09	224	108	116	2.08	18
5	MEN	128	31.26	799	290	509	7.43	88
6	MEN	128	35.42	118	40	78	1.10	30
7	MEN	128	35.48	145	50	95	1.35	18
8	MEN	128	35.94	204	63	141	1.90	30
9	MEN	128	38.77	218	98	120	2.03	20
10	MEN	128	40.52	216	78	138	2.01	34
11	MEN	128	40.75	132	40	92	1.23	9
12	MEN	128	41.12	650	490	160	6.04	43
13	MEN	128	41.35	363	183	180	3.38	43
14	MEN	128	42.81	335	170	165	3.11	48
15	MEN	128	43.16	470	330	140	4.37	35
16	MEN	128	44.85	167	52	115	1.55	-
17	MEN	128	46.66	448	68	380	4.17	25
18	MEN	128	47.52	273	120	153	2.54	10
19	MEN	128	47.71	290	50	240	2.70	22
20	MEN	128	47.97	148	65	83	1.38	-
21	MEN	128	48.30	133	67	66	1.24	18
22	MEN	128	48.44	177	128	49	1.65	23
			TOTAL	6,684			62.14	597

FIBER ROLLS

SEQUENCE	ITEM	MATERIAL DESCRIPTION	MATERIAL TYPE	REMARKS
FIBER ROLLS MUST BE INSTALLED BEFORE EROSION CONTROL	FIBER ROLLS	FIBER ROLL	TYPE B 8" TO 10" Dia	TYPE 1 FIBER ROLL INSTALLATION

EROSION CONTROL

ITEM	MATERIAL DESCRIPTION	APPLICATION RATE	NOTES
WOOD MULCH	SHREDDED REDWOOD BARK	405 CY/ACRE	3" DEPTH

LEGEND:

- X — DRAINAGE SYSTEM No.
- DRAINAGE UNIT
- ROCK SLOPE PROTECTION
- Temp FENCE (TYPE ESA)
- WOOD MULCH

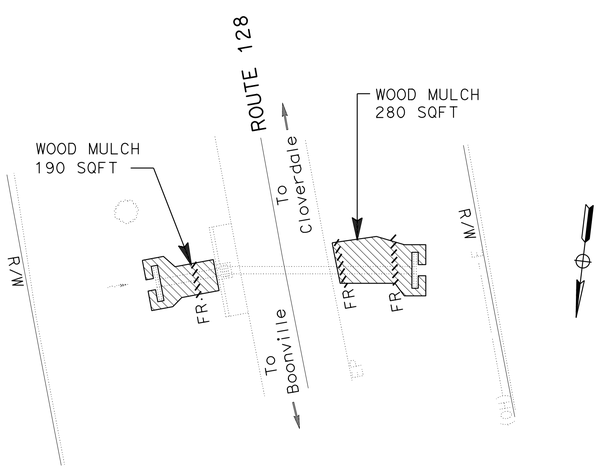

DRAINAGE SYSTEM No. 1
ROUTE 128
PM 30.14

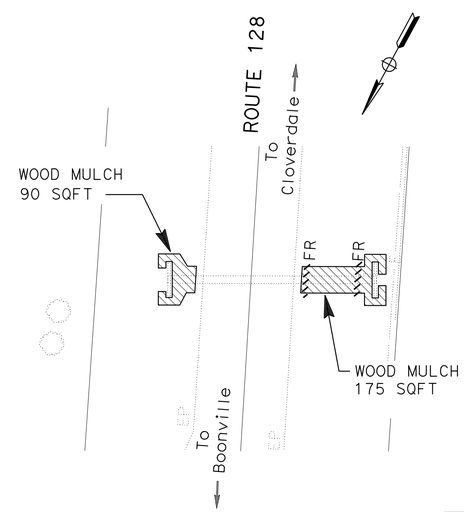

DRAINAGE SYSTEM No. 2
ROUTE 128
PM 30.57

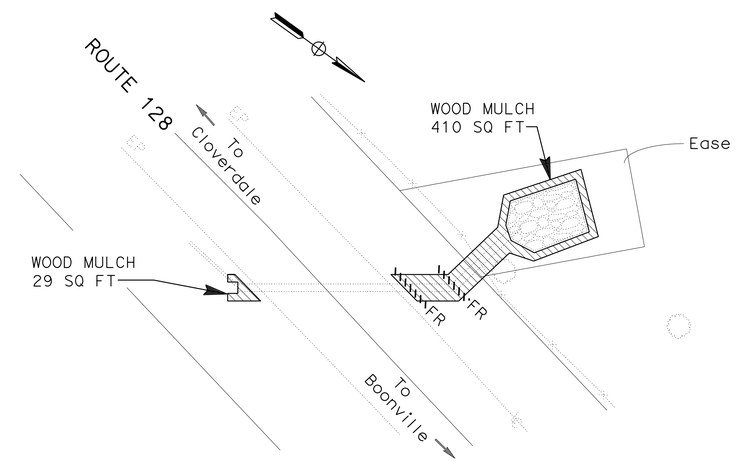

DRAINAGE SYSTEM No. 3
ROUTE 128
PM 31.03

EROSION CONTROL QUANTITIES
EROSION CONTROL PLANS

SCALE: 1"=20'

EC-1

STATE OF CALIFORNIA - DEPARTMENT OF TRANSPORTATION
Caltrans® LANDSCAPE ARCHITECTURE
FUNCTIONAL SUPERVISOR: TIM BOESE
CALCULATED-DESIGNED BY | CHECKED BY | REVISED BY | DATE REVISED

LAST REVISION 00-00-00 | DATE PLOTTED => 28-APR-2016 | TIME PLOTTED => 18:37

Dist	COUNTY	ROUTE	POST MILES TOTAL PROJECT	SHEET No.	TOTAL SHEETS
01	Men	128	30.1/48.5	39	52

Laura Lazzarotto
LICENSED LANDSCAPE ARCHITECT

4-25-16
PLANS APPROVAL DATE

LICENSED LANDSCAPE ARCHITECT
Laura Lazzarotto
Signature
8-31-17
Renewal Date
4-25-16
Date
STATE OF CALIFORNIA

THE STATE OF CALIFORNIA OR ITS OFFICERS OR AGENTS SHALL NOT BE RESPONSIBLE FOR THE ACCURACY OR COMPLETENESS OF SCANNED COPIES OF THIS PLAN SHEET.

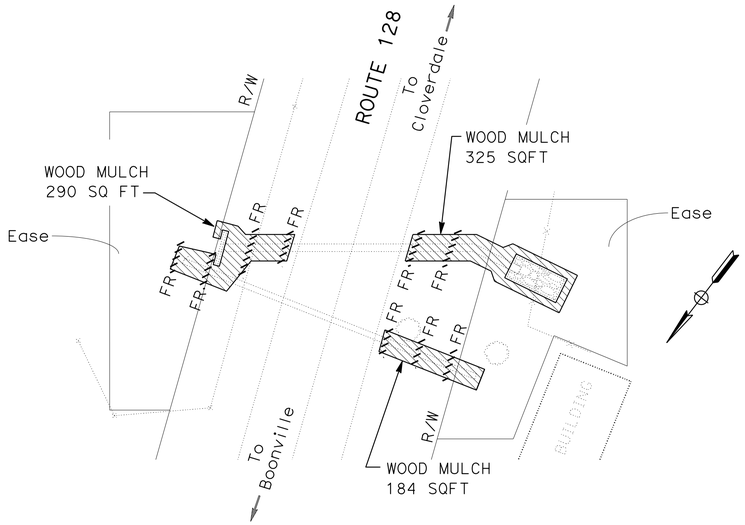

DRAINAGE SYSTEM No. 5
ROUTE 128
PM 31.26

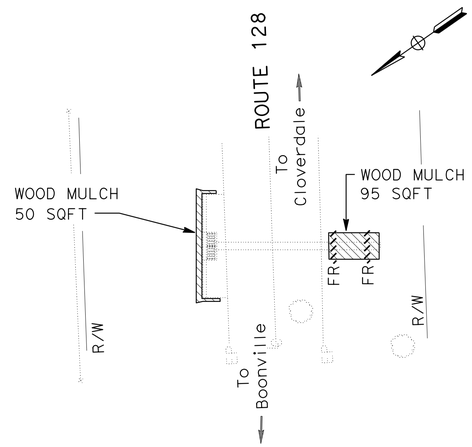

DRAINAGE SYSTEM No. 7
ROUTE 128
PM 35.48

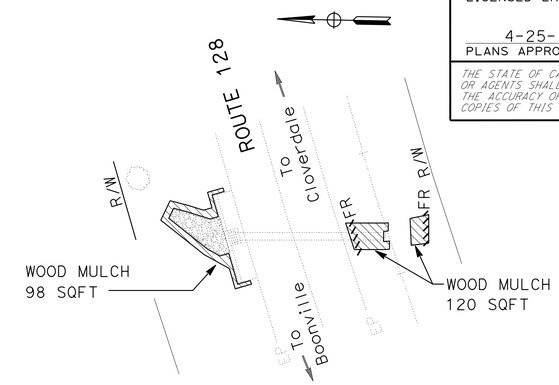

DRAINAGE SYSTEM No. 9
ROUTE 128
PM 38.77

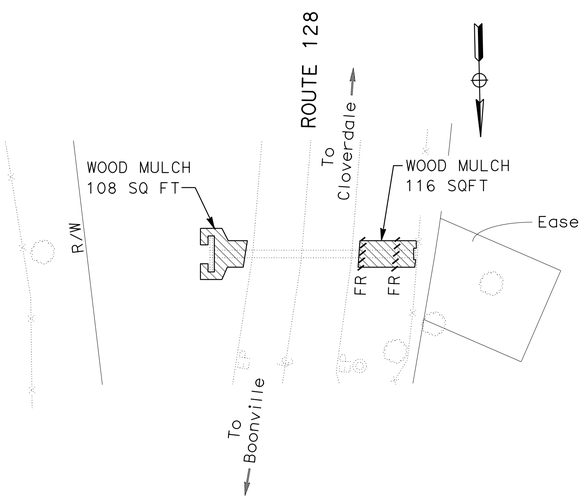

DRAINAGE SYSTEM No. 4
ROUTE 128
PM 31.09

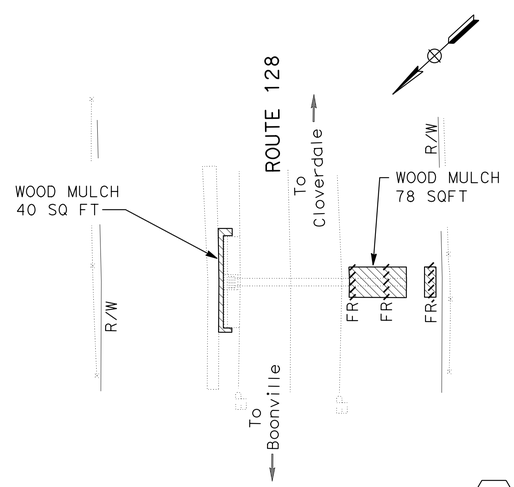

DRAINAGE SYSTEM No. 6
ROUTE 128
PM 35.42

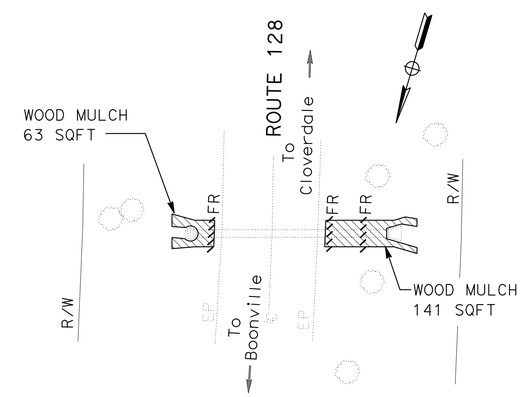

DRAINAGE SYSTEM No. 8
ROUTE 128
PM 35.94

EROSION CONTROL PLANS
SCALE: 1" = 20'

EC-2

STATE OF CALIFORNIA - DEPARTMENT OF TRANSPORTATION
Caltrans® LANDSCAPE ARCHITECTURE

FUNCTIONAL SUPERVISOR: TIM BOESE
CALCULATED-DESIGNED BY: LAURA LAZZAROTTO
CHECKED BY
REVISED BY
DATE REVISED

LAST REVISION 00-00-00
DATE PLOTTED => 28-APR-2016
TIME PLOTTED => 18:37

Dist	COUNTY	ROUTE	POST MILES TOTAL PROJECT	SHEET No.	TOTAL SHEETS
01	Men	128	30.1/48.5	40	52

Laura Lazzarotto
LICENSED LANDSCAPE ARCHITECT

4-25-16
PLANS APPROVAL DATE

LICENSED LANDSCAPE ARCHITECT
Laura Lazzarotto
Signature
8-31-17
Renewal Date
4-25-16
Date
STATE OF CALIFORNIA

THE STATE OF CALIFORNIA OR ITS OFFICERS OR AGENTS SHALL NOT BE RESPONSIBLE FOR THE ACCURACY OR COMPLETENESS OF SCANNED COPIES OF THIS PLAN SHEET.

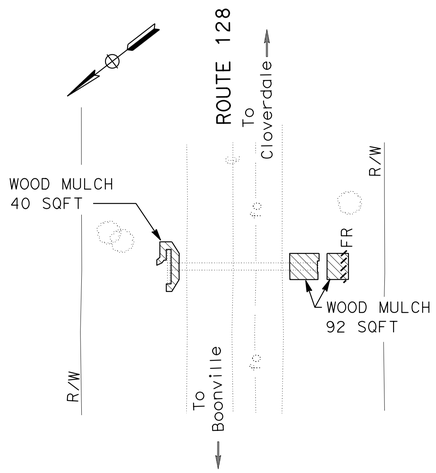

DRAINAGE SYSTEM No. 11
ROUTE 128
PM 40.75

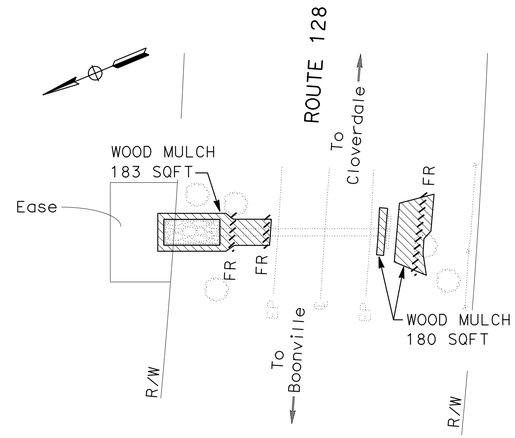

DRAINAGE SYSTEM No. 13
ROUTE 128
PM 41.35

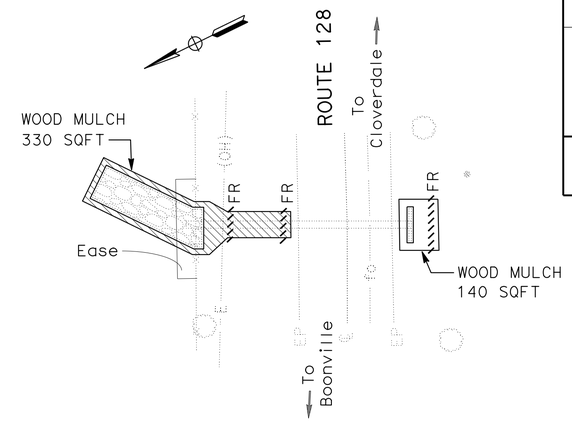

DRAINAGE SYSTEM No. 15
ROUTE 128
PM 43.16

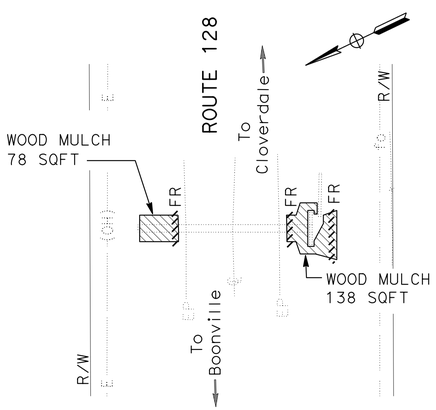

DRAINAGE SYSTEM No. 10
ROUTE 128
PM 40.52

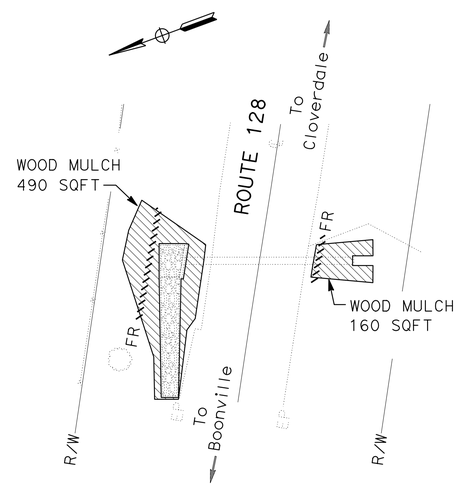

DRAINAGE SYSTEM No. 12
ROUTE 128
PM 41.12

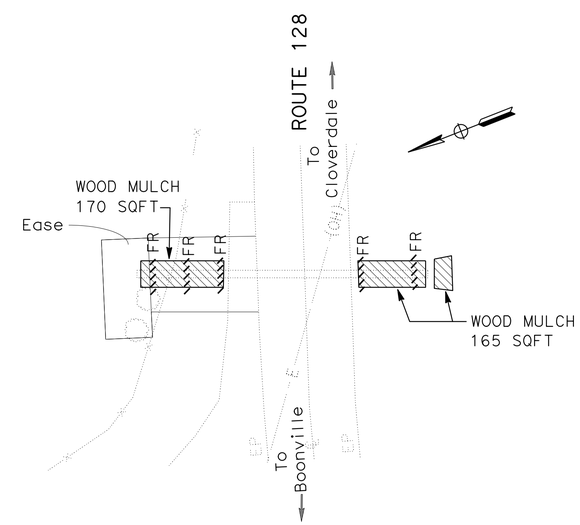

DRAINAGE SYSTEM No. 14
ROUTE 128
PM 42.81

EROSION CONTROL PLANS

SCALE: 1"=20'

EC-3

STATE OF CALIFORNIA - DEPARTMENT OF TRANSPORTATION
Caltrans® LANDSCAPE ARCHITECTURE

SENIOR LANDSCAPE ARCHITECT: RON FLORY

CALCULATED-DESIGNED BY
CHECKED BY

REVISED BY
DATE REVISED

LAST REVISION 00-00-00
DATE PLOTTED => 28-APR-2016
TIME PLOTTED => 18:37

Dist	COUNTY	ROUTE	POST MILES TOTAL PROJECT	SHEET No.	TOTAL SHEETS
01	Men	128	30.1/48.5	41	52

LICENSED LANDSCAPE ARCHITECT

4-25-16
PLANS APPROVAL DATE

LICENSED LANDSCAPE ARCHITECT — Laura Lazzarotto — Signature — 8-31-17 Renewal Date — 4-25-16 Date — STATE OF CALIFORNIA

THE STATE OF CALIFORNIA OR ITS OFFICERS OR AGENTS SHALL NOT BE RESPONSIBLE FOR THE ACCURACY OR COMPLETENESS OF SCANNED COPIES OF THIS PLAN SHEET.

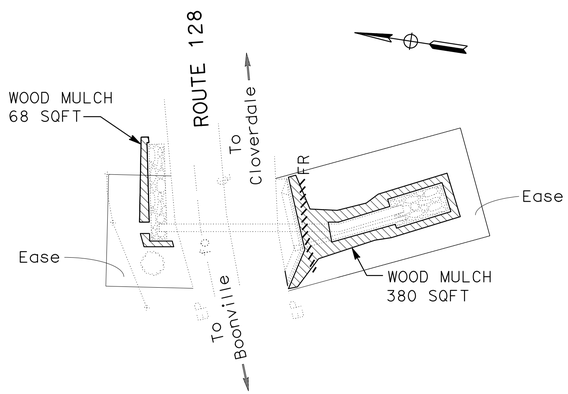

DRAINAGE SYSTEM No. 17
ROUTE 128
PM 46.66

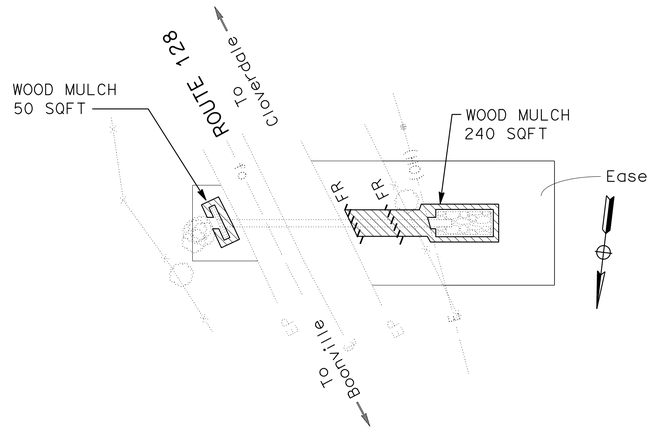

DRAINAGE SYSTEM No. 19
ROUTE 128
PM 47.71

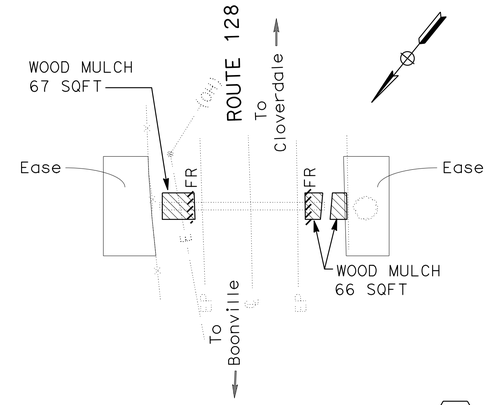

DRAINAGE SYSTEM No. 21
ROUTE 128
PM 48.30

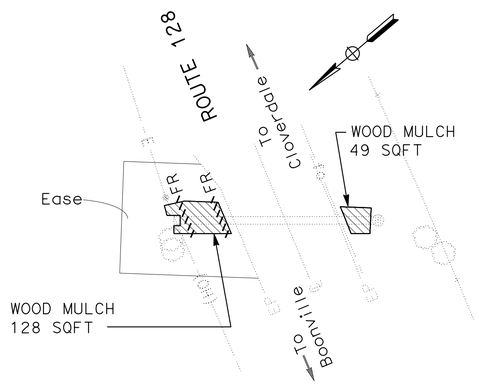

DRAINAGE SYSTEM No. 22
ROUTE 128
PM 48.44

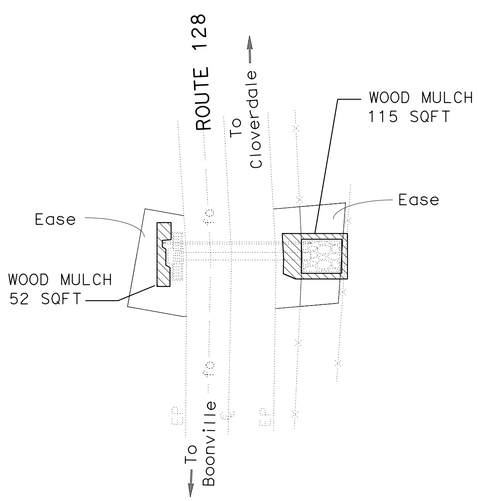

DRAINAGE SYSTEM No. 16
ROUTE 128
PM 44.85

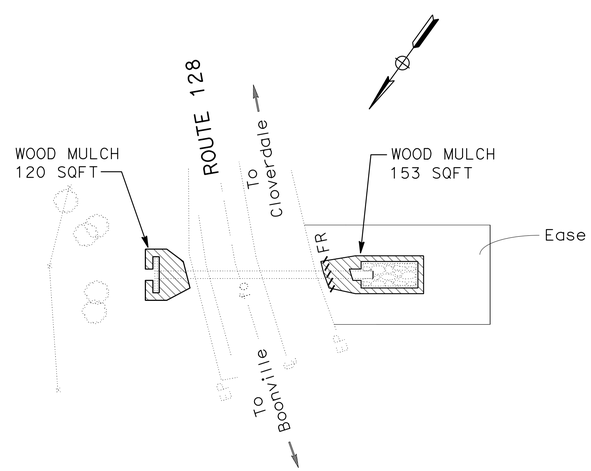

DRAINAGE SYSTEM No. 18
ROUTE 128
PM 47.52

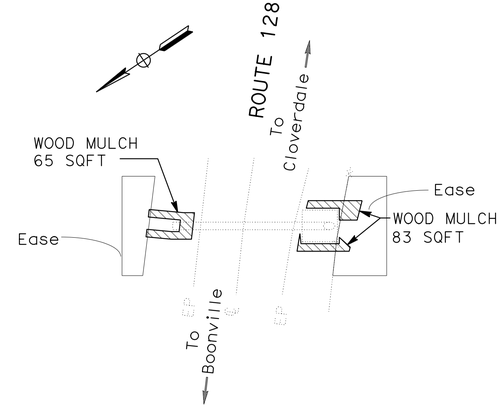

DRAINAGE SYSTEM No. 20
ROUTE 128
PM 47.97

EROSION CONTROL PLANS

SCALE: 1"=20'

EC-4

STATE OF CALIFORNIA - DEPARTMENT OF TRANSPORTATION
Caltrans® LANDSCAPE ARCHITECTURE
SENIOR LANDSCAPE ARCHITECT: RON FLORY
CALCULATED-DESIGNED BY
CHECKED BY
REVISED BY
DATE REVISED

LAST REVISION 00-00-00
DATE PLOTTED => 28-APR-2016
TIME PLOTTED => 18:37

M

Maint	MAINTENANCE
Max	MAXIMUM
MB	METAL BEAM
MBB	METAL BEAM BARRIER
MBGR	METAL BEAM GUARD RAILING
Med	MEDIAN
MGS	MIDWEST GUARDRAIL SYSTEM
MH	MANHOLE
Min	MINIMUM
Misc	MISCELLANEOUS
Misc I & S	MISCELLANEOUS IRON AND STEEL
Mkr	MARKER
Mod	MODIFIED,
	MODIFY
Mon	MONUMENT
MP	METAL PLATE
MPGR	METAL PLATE GUARD RAILING
MR	MOVEMENT RATING
MSE	MECHANICALLY STABILIZED EMBANKMENT
Mt	MOUNTAIN, MOUNT
Mtl	MATERIAL
MVP	MAINTENANCE VEHICLE PULLOUT

N

N	NORTH
NB	NORTHBOUND
No.	NUMBER (MUST HAVE PERIOD)
Nos.	NUMBERS (MUST HAVE PERIOD)
NPS	NOMINAL PIPE SIZE
NS	NEAR SIDE
NSP	NEW STANDARD PLAN
NTS	NOT TO SCALE

O

Oblr	OBLITERATE
OC	OVERCROSSING
OD	OUTSIDE DIAMETER
OF	OUTSIDE FACE
OG	ORIGINAL GROUND
OGAC	OPEN GRADED ASPHALT CONCRETE
OGFC	OPEN GRADED FRICTION COURSE
OH	OVERHEAD
OHWM	ORDINARY HIGH WATER MARK
O-O	OUT TO OUT
Opp	OPPOSITE
OSD	OVERSIDE DRAIN

P

P	PAGE
PAP	PERFORATED ALUMINUM PIPE
PB	PULL BOX
PC	POINT OF CURVATURE,
	PRECAST
PCC	POINT OF COMPOUND CURVE,
	PORTLAND CEMENT CONCRETE
PCMS	PORTABLE CHANGEABLE MESSAGE SIGN
PCP	PERFORATED CONCRETE PIPE,
	PRESTRESSED CONCRETE PIPE
PCVC	POINT OF COMPOUND VERTICAL CURVE
PEC	PERMIT TO ENTER AND CONSTRUCT
Ped	PEDESTRIAN
Ped OC	PEDESTRIAN OVERCROSSING
Ped UC	PEDESTRIAN UNDERCROSSING
Perm Mtl	PERMEABLE MATERIAL

P continued

PG	PROFILE GRADE
PI	POINT OF INTERSECTION
PJP	PARTIAL JOINT PENETRATION
Pkwy	PARKWAY
ℙ,PL	PLATE
P/L	PROPERTY LINE
PM	POST MILE,
	TIME FROM NOON TO MIDNIGHT
PN	PAVING NOTCH
POC	POINT OF HORIZONTAL CURVE
POT	POINT OF TANGENT
POVC	POINT OF VERTICAL CURVE
PP	PIPE PILE,
	PLASTIC PIPE,
	POWER POLE
PPL	PREFORMED PERMEABLE LINER
PPP	PERFORATED PLASTIC PIPE
PRC	POINT OF REVERSE CURVE
PRF	PAVEMENT REINFORCING FABRIC
PRVC	POINT OF REVERSE VERTICAL CURVE
PS&E	PLANS, SPECIFICATIONS AND ESTIMATES
PS, P/S	PRESTRESSED
PSP	PERFORATED STEEL PIPE
PT	POINT OF TANGENCY
PVC	POLYVINYL CHLORIDE
Pvmt	PAVEMENT

Q

Qty	QUANTITY

R

R	RADIUS
R & D	REMOVE AND DISPOSE
R & S	REMOVE AND SALVAGE
R/C	RATE OF CHANGE
RCA	REINFORCED CONCRETE ARCH
RCB	REINFORCED CONCRETE BOX
RCP	REINFORCED CONCRETE PIPE
RCPA	REINFORCED CONCRETE PIPE ARCH
Rd	ROAD
Reinf	REINFORCED,
	REINFORCEMENT,
	REINFORCING
Rel	RELOCATE
Repl	REPLACEMENT
Ret	RETAINING
Rev	REVISED, REVISION
Rdwy	ROADWAY
RHMA	RUBBERIZED HOT MIX ASPHALT
Riv	RIVER
RM	ROAD-MIXED
RP	RADIUS POINT,
	REFERENCE POINT
RR	RAILROAD
RSP	ROCK SLOPE PROTECTION,
	REVISED STANDARD PLAN
Rt	RIGHT
Rte	ROUTE
RW	REDWOOD,
	RETAINING WALL
R/W	RIGHT OF WAY
Rwy	RAILWAY

S

S	SOUTH,
	SUPPLEMENT
SAE	STRUCTURE APPROACH EMBANKMENT
Salv	SALVAGE
SAPP	STRUCTURAL ALUMINUM PLATE PIPE
SB	SOUTHBOUND
SC	SAND CUSHION
SCSP	SLOTTED CORRUGATED STEEL PIPE
SD	STORM DRAIN
Sec	SECOND,
	SECTION
Sep	SEPARATION
SG	SUBGRADE
Shld	SHOULDER
Sht	SHEET
Sim	SIMILAR
℄	STATION LINE
SM	SELECTED MATERIAL
Spec	SPECIAL,
	SPECIFICATIONS
SPP	SLOTTED PLASTIC PIPE
SS	SLOPE STAKE
SSBM	STRAP AND SADDLE BRACKET METHOD
SSD	STRUCTURAL SECTION DRAIN
SSPA	STRUCTURAL STEEL PLATE ARCH
SSPP	STRUCTURAL STEEL PLATE PIPE
SSPPA	STRUCTURAL STEEL PLATE PIPE ARCH
SSRP	STEEL SPIRAL RIB PIPE
St	STREET
Sta	STATION
STBB	SINGLE THRIE BEAM BARRIER
Std	STANDARD
Str	STRUCTURE
Surf	SURFACING
SW	SIDEWALK,
	SOUND WALL
Swr	SEWER
Sym	SYMMETRICAL
S4S	SURFACE 4 SIDES

T

T	SEMI-TANGENT
Tan	TANGENT
TBB	THRIE BEAM BARRIER
Tbr	TIMBER
TC	TOP OF CURB
TCB	TRAFFIC CONTROL BOX
TCE	TEMPORARY CONSTRUCTION EASEMENT
Tel	TELEPHONE
Temp	TEMPORARY
TG	TOP OF GRADE
Tot	TOTAL
TP	TELEPHONE POLE
TPB	TREATED PERMEABLE BASE
TPM	TREATED PERMEABLE MATERIAL
Trans	TRANSITION

T continued

TS	TRANSVERSE,
	TRAFFIC SIGNAL,
	TUBULAR STEEL
Typ	TYPICAL

U

UC	UNDERCROSSING
UD	UNDERDRAIN
UG	UNDERGROUND
UON	UNLESS OTHERWISE NOTED
UP	UNDERPASS

V

V	VALVE,
	DESIGN SPEED
Var	VARIABLE,
	VARIES
VC	VERTICAL CURVE
VCP	VITRIFIED CLAY PIPE
Vert	VERTICAL
Via	VIADUCT
Vol	VOLUME

W

W	WEST,
	WIDTH
WB	WESTBOUND
WH	WEEP HOLE
WM	WIRE MESH
WS	WATER SURFACE
WSP	WELDED STEEL PIPE
Wt	WEIGHT
WV	WATER VALVE
WW	WINGWALL
WWLOL	WINGWALL LAYOUT LINE

X

X Sec	CROSS SECTION
Xing	CROSSING

Y

Yr	YEAR
Yrs	YEARS

Dist	COUNTY	ROUTE	POST MILES TOTAL PROJECT	SHEET No.	TOTAL SHEETS
01	Men	128	30.1/48.5	42	52

Grace M. Tsushima
REGISTERED CIVIL ENGINEER

July 19, 2013
PLANS APPROVAL DATE

REGISTERED PROFESSIONAL ENGINEER
Grace M. Tsushima
No. C49814
Exp. 9-30-14
CIVIL
STATE OF CALIFORNIA

THE STATE OF CALIFORNIA OR ITS OFFICERS OR AGENTS SHALL NOT BE RESPONSIBLE FOR THE ACCURACY OR COMPLETENESS OF SCANNED COPIES OF THIS PLAN SHEET.

TO ACCOMPANY PLANS DATED 4-25-16

UNIT OF MEASUREMENT SYMBOLS:

Some of the symbols used in the project plan quantity tables and in the Bid Item List are:

TABLE A

SYMBOL USED	DEFINITIONS
ACRE	ACRE
CF	CUBIC FOOT
CY	CUBIC YARD
EA	EACH
GAL	GALLON
LB	POUND
LF	LINEAR FOOT
SQFT	SQUARE FOOT
SQYD	SQUARE YARD
STA	100 FEET
TAB	TABLET
TON	2,000 POUNDS

Some of the symbols used in the plans other than in the project plan quantity tables are:

TABLE B

SYMBOL USED	DEFINITIONS
ksi	KIPS PER SQUARE INCH
ksf	KIPS PER SQUARE FOOT
psi	POUNDS PER SQUARE INCH
psf	POUNDS PER SQUARE FOOT
lb/ft^3, pcf	POUNDS PER CUBIC FOOT
tsf	TONS PER SQUARE FOOT
mph, MPH *	MILES PER HOUR
ø	NOMINAL DIAMETER
oz	OUNCE
lb	POUND
kip	1,000 POUNDS
cal	CALORIE
ft	FOOT OR FEET
gal	GALLON

* For use on a sign panel only

STATE OF CALIFORNIA
DEPARTMENT OF TRANSPORTATION

ABBREVIATIONS (SHEET 2 OF 2)

NO SCALE

RSP A10B DATED JULY 19, 2013 SUPERSEDES STANDARD PLAN A10B DATED MAY 20, 2011 - PAGE 2 OF THE STANDARD PLANS BOOK DATED 2010.

REVISED STANDARD PLAN RSP A10B

2010 REVISED STANDARD PLAN RSP A10B

6-7-13

Dist	COUNTY	ROUTE	POST MILES TOTAL PROJECT	SHEET No.	TOTAL SHEETS
01	Men	128	30.1/48.5	43	52

REGISTERED CIVIL ENGINEER

October 30, 2015
PLANS APPROVAL DATE

REGISTERED PROFESSIONAL ENGINEER
Carl M. Duan
No. C59976
Exp. 6-30-16
CIVIL
STATE OF CALIFORNIA

THE STATE OF CALIFORNIA OR ITS OFFICERS OR AGENTS SHALL NOT BE RESPONSIBLE FOR THE ACCURACY OR COMPLETENESS OF SCANNED COPIES OF THIS PLAN SHEET.

TO ACCOMPANY PLANS DATED 4-25-16

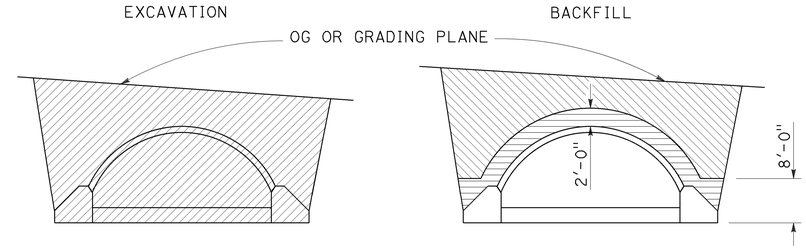

IN TRENCH

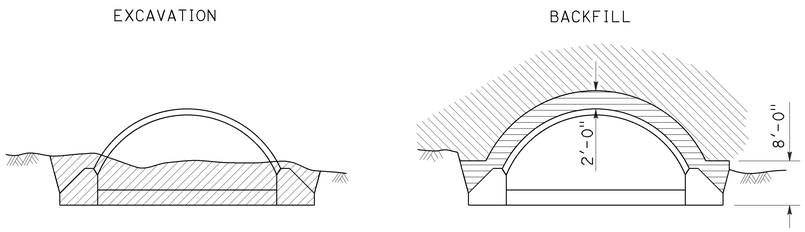

IN EMBANKMENT

STRUCTURAL STEEL PLATE ARCHES

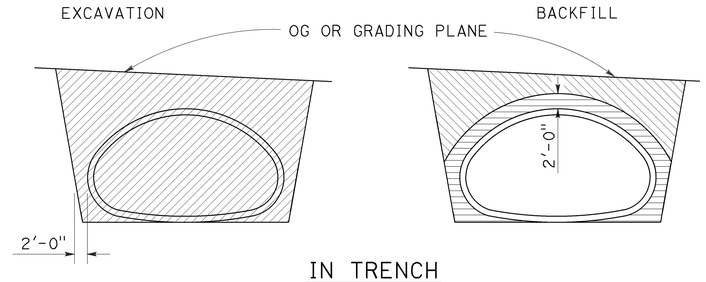

IN TRENCH

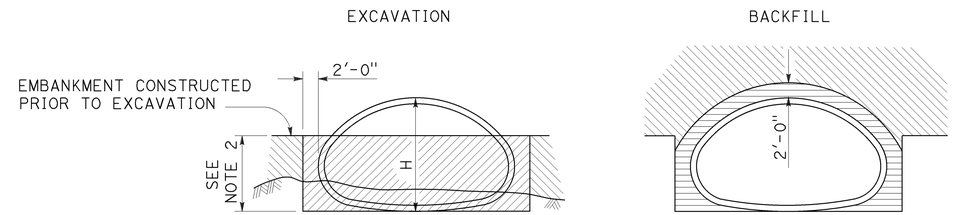

IN EMBANKMENT

STRUCTURAL STEEL PLATE PIPE ARCHES AND VEHICULAR UNDERCROSSING

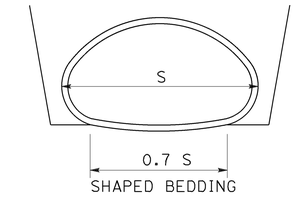

SHAPED BEDDING
S = Larger than 84"

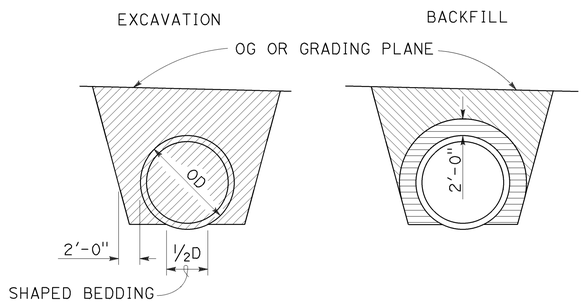

IN TRENCH

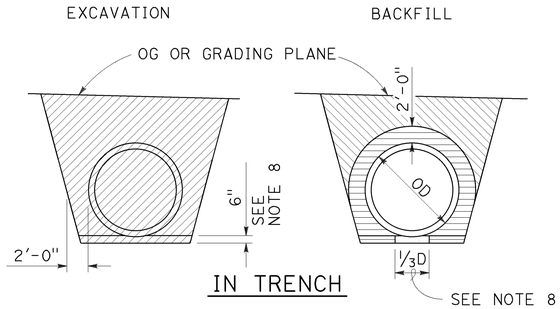

IN TRENCH

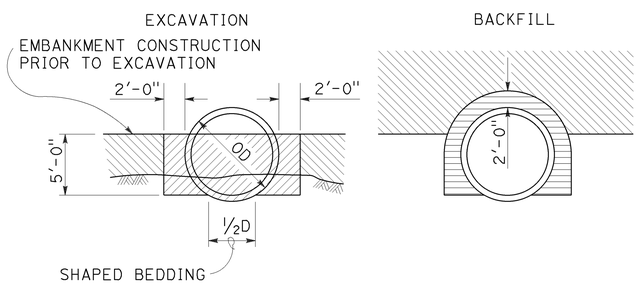

IN EMBANKMENT

PIPES

Larger than 84"

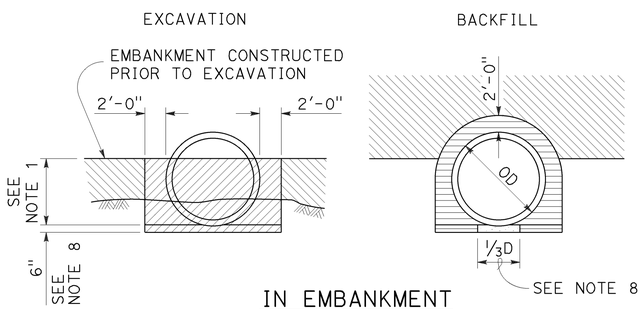

IN EMBANKMENT

METAL AND PLASTIC PIPES AND CORRUGATED METAL PIPE ARCHES

84" or Smaller

NOTES:

1. PIPES: 30" minimum for diameters up to and including 42" then ⅔ diameter but no more than 60" required. CORRUGATED METAL PIPE ARCHES: 30" maximum.
2. ⅔ H up to 60" maximum.
3. Slope or shore excavation sides as necessary.
4. Backfill shall be placed full width of excavation except as noted.
5. Diagrams do not apply to overside drains.
6. Dimensions shown are minimum.
7. Construction strutting of structural steel plate pipe, arches and vehicular undercrossing to be used when shown on the project plans. When shown, see Standard Plan D88A for strutting requirements.
8. Excavation below pipe and 80% relative compaction requirements for plastic pipes only.
9. D is the inside diameter (ID) of the pipe.

LEGEND

- STRUCTURE EXCAVATION (CULVERT)
- ROADWAY EMBANKMENT
- STRUCTURE BACKFILL (CULVERT) 95% RELATIVE COMPACTION
- STRUCTURE BACKFILL (CULVERT) 80% RELATIVE COMPACTION

STATE OF CALIFORNIA
DEPARTMENT OF TRANSPORTATION

EXCAVATION AND BACKFILL METAL AND PLASTIC CULVERTS

NO SCALE

RSP A62F DATED OCTOBER 30, 2015 SUPERSEDES STANDARD PLAN A62F DATED MAY 20, 2011 - PAGE 26 OF THE STANDARD PLANS BOOK DATED 2010.

REVISED STANDARD PLAN RSP A62F

2010 REVISED STANDARD PLAN RSP A62F

10-13-15

Dist	COUNTY	ROUTE	POST MILES TOTAL PROJECT	SHEET No.	TOTAL SHEETS
01	Men	128	30.1/48.5	44	52

Raymond Don Tsztoo
REGISTERED CIVIL ENGINEER

October 19, 2012
PLANS APPROVAL DATE

REGISTERED PROFESSIONAL ENGINEER
Raymond Don Tsztoo
No. C37332
Exp. 6-30-14
CIVIL
STATE OF CALIFORNIA

THE STATE OF CALIFORNIA OR ITS OFFICERS OR AGENTS SHALL NOT BE RESPONSIBLE FOR THE ACCURACY OR COMPLETENESS OF SCANNED COPIES OF THIS PLAN SHEET.

TO ACCOMPANY PLANS DATED 4-25-16

2010 REVISED STANDARD PLAN RSP A86D

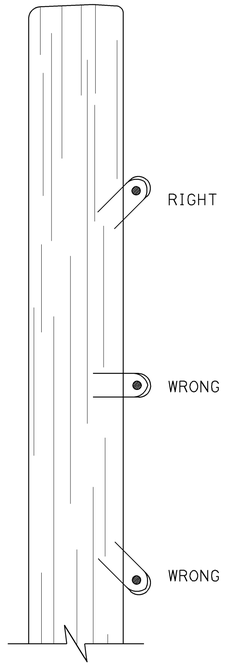

DRIVE STAPLES AT ANGLE

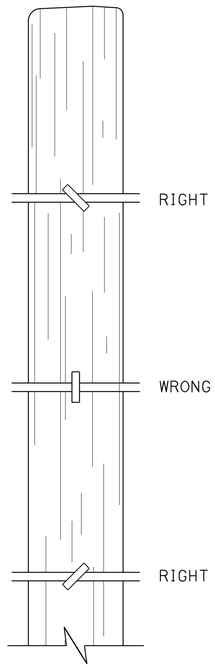

DO NOT DRIVE STAPLES PARALLEL TO SIDE OF POST

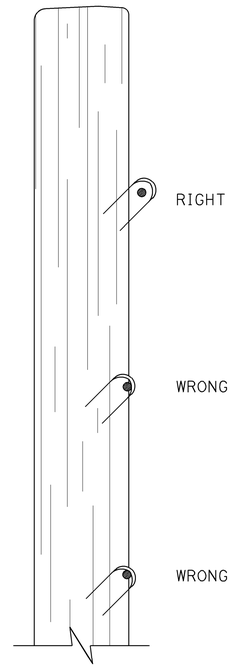

LEAVE WIRE LOOSE IN STAPLE

LINE POST STAPLING DETAILS

(Apply to rectangular/square and round posts)
Do not staple vertical wire in wire mesh.

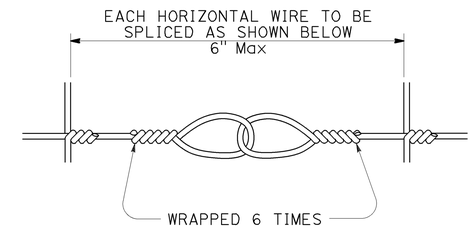

SPLICE DETAIL FOR BARBED WIRE/WIRE MESH FENCE

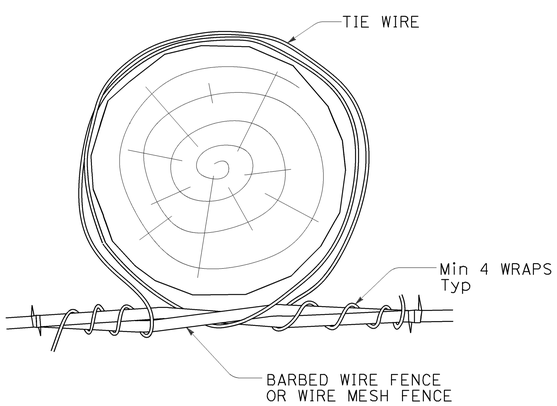

OPTION A

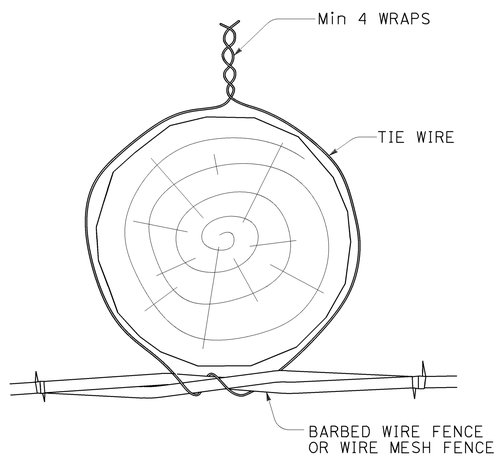

OPTION B

LINE POST WIRE TIE OPTION DETAILS

(Option details also apply to rectangular/square posts)

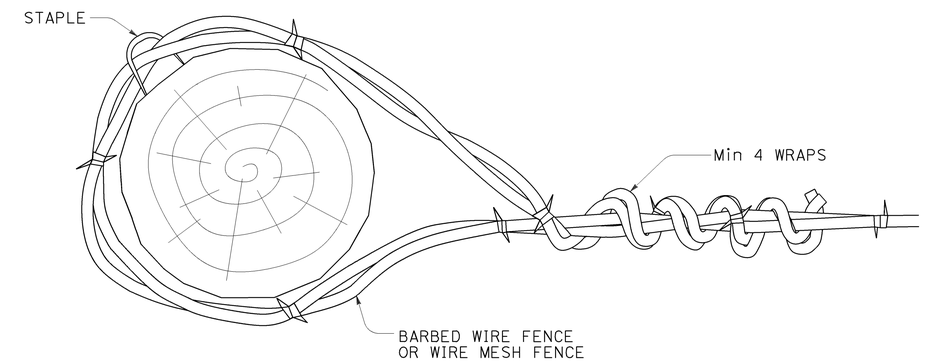

END, LATCH, PULL, AND CORNER POST DETAIL

(Also applies to rectangular/square posts)

STATE OF CALIFORNIA
DEPARTMENT OF TRANSPORTATION

BARBED WIRE AND WIRE MESH FENCE - MISCELLANEOUS DETAILS

NO SCALE

RSP A86D DATED OCTOBER 19, 2012 SUPPLEMENTS THE STANDARD PLANS BOOK DATED 2010.

REVISED STANDARD PLAN RSP A86D

10-9-12

Dist	COUNTY	ROUTE	POST MILES TOTAL PROJECT	SHEET No.	TOTAL SHEETS
01	Men	128	30.1/48.5	45	52

REGISTERED CIVIL ENGINEER

January 15, 2016
PLANS APPROVAL DATE

REGISTERED PROFESSIONAL ENGINEER
Michael Janzen
No. 44788
Exp. 3-31-16
CIVIL
STATE OF CALIFORNIA

THE STATE OF CALIFORNIA OR ITS OFFICERS OR AGENTS SHALL NOT BE RESPONSIBLE FOR THE ACCURACY OR COMPLETENESS OF SCANNED COPIES OF THIS PLAN SHEET.

TO ACCOMPANY PLANS DATED 4-25-16

2010 REVISED STANDARD PLAN RSP A87B

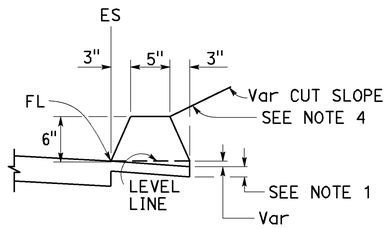

TYPE A
See Notes 3 and 5

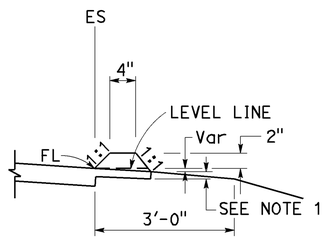

TYPE C

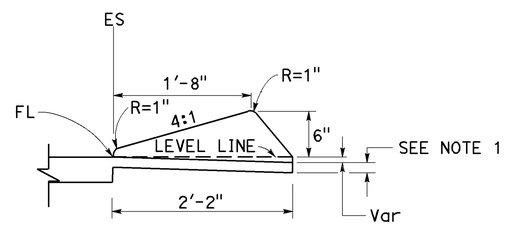

TYPE D

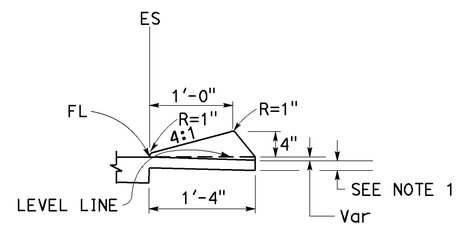

TYPE E

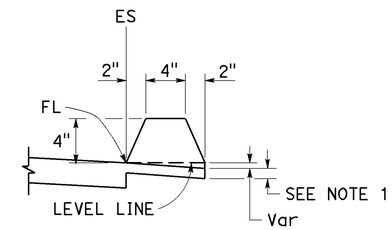

TYPE F
See Note 5

DIKES

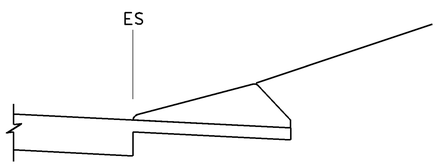

CASE C-1
Cut Slope

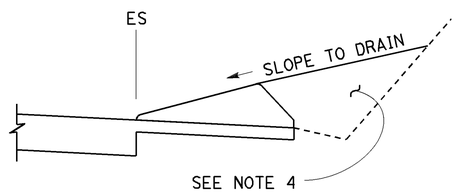

CASE C-2
Cut Slope

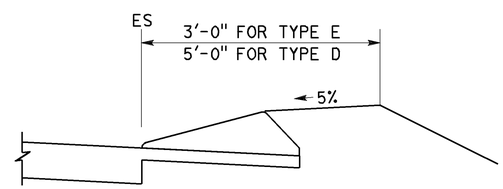

CASE F

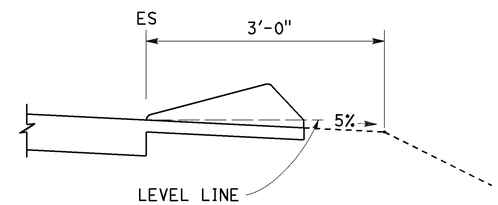

CASE R
See Note 2

TYPE D AND E BACKFILL DETAILS

NOTES:

1. For HMA shoulders only, extend top layer of HMA placed on the shoulder under dike with no joint at the ES. For projects with OGFC shoulders, do not extend OGFC under dike. See project plans for modified dike detail.
2. Case R applies to retrofit only projects where restrictive conditions do not provide enough width for Case F backfill.
3. Type A dike only to be used where restrictive slope conditions do not provide enough width to use Type D or Type E dike.
4. Fill and compact with excavated material to top of dike.
5. Use Type A or F dike, where dike is required with guardrail installations. See Revised Standard Plan RSP A77N4 for dike positioning details. See Revised Standard Plan RSP A77N3 for hinge point offsets with guardrail.

DIKE QUANTITIES

TYPE	CUBIC YARDS PER LINEAR FOOT
A	0.0135
C	0.0038
D	0.0293
E	0.0130
F	0.0066

Quantities based on 5% cross slope.

STATE OF CALIFORNIA
DEPARTMENT OF TRANSPORTATION

HOT MIX ASPHALT DIKES

NO SCALE

RSP A87B DATED JANUARY 15, 2016 SUPERSEDES RSP A87B DATED JULY 19, 2013 AND STANDARD PLAN A87B DATED MAY 20, 2011 - PAGE 120 OF THE STANDARD PLANS BOOK DATED 2010.

REVISED STANDARD PLAN RSP A87B

11-17-15

TO ACCOMPANY PLANS DATED 4-25-16

Dist	COUNTY	ROUTE	POST MILES TOTAL PROJECT	SHEET No.	TOTAL SHEETS
01	Men	128	30.1/48.5	46	52

REGISTERED CIVIL ENGINEER

October 19, 2012
PLANS APPROVAL DATE

REGISTERED PROFESSIONAL ENGINEER Glenn DeCou No. C34547 Exp. 9-30-13 CIVIL STATE OF CALIFORNIA

THE STATE OF CALIFORNIA OR ITS OFFICERS OR AGENTS SHALL NOT BE RESPONSIBLE FOR THE ACCURACY OR COMPLETENESS OF SCANNED COPIES OF THIS PLAN SHEET.

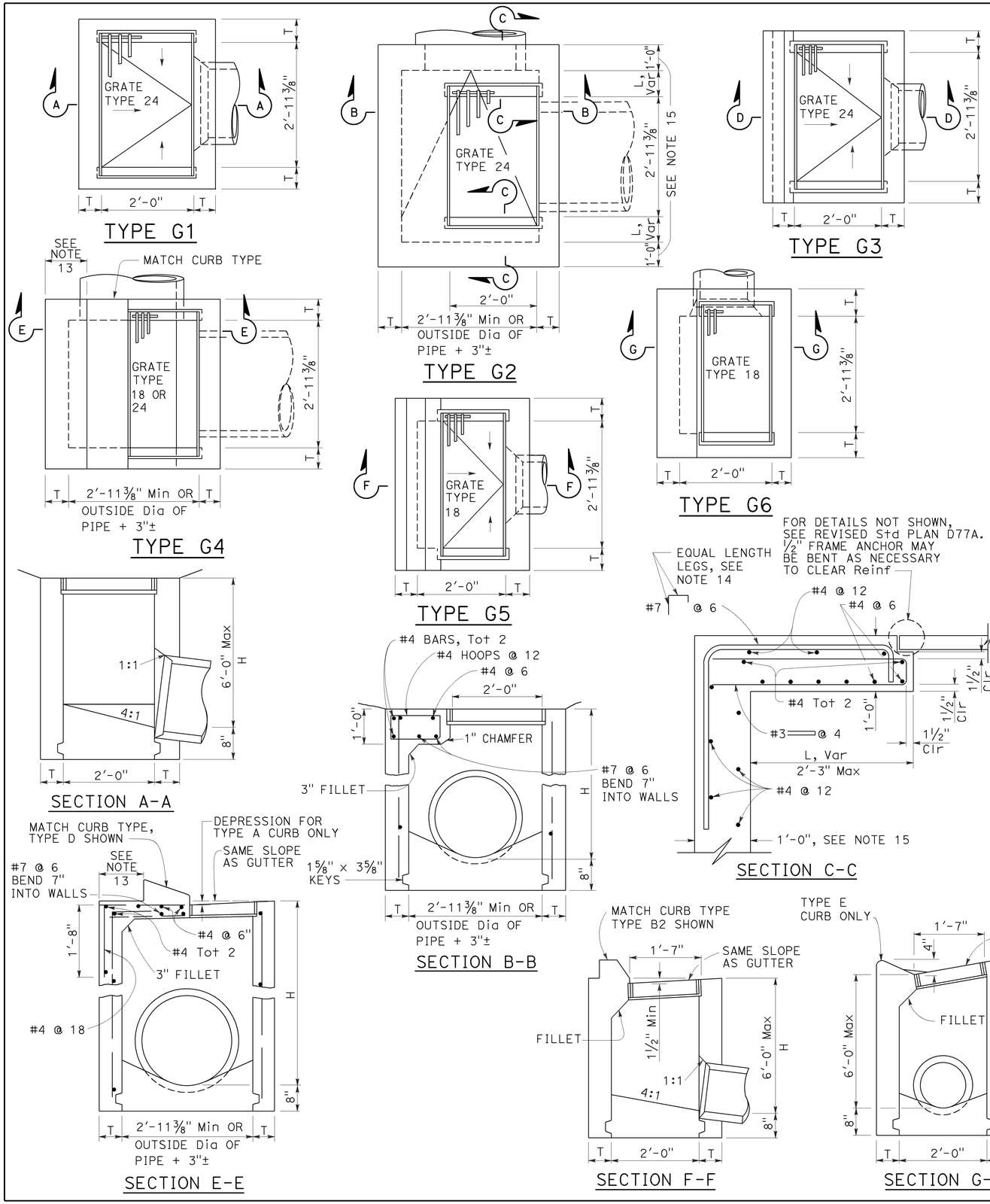

NOTES:

1. "H" is the difference in elevation between the outlet pipe flow line and the normal gutter grade line undepressed.
2. For "T" wall thickness, see Table A below.
3. Wall reinforcing not required when "H" is 8'-0" or less and the unsupported width or length is 7'-0" or less. Walls exceeding these limits shall be reinforced with #4 bars @ 1'-6" ± centers placed 1½" clear to inside of box unless otherwise shown.
4. Inlet bottom reinforcing not required. See Standard Plan D74C for alternative reinforced bottom and alternative half round bottom.
5. Steps-None required where "H" is less than 2'-6". Where "H" is 2'-6" or more, install steps with lowest rung 1'-0" above the floor and highest rung not more than 6" below top of inlet. The distance between steps shall not exceed 1'-0" and shall be uniform throughout the length of the wall. Place steps in the wall without an opening. Steps inserts may be substituted for the bar steps. Step inserts shall comply with State Industrial Safety requirements. See Standard Plan D74C for step details.
6. Details shown apply to both metal and concrete pipe.
7. Pipe(s) can be placed in any wall.
8. Curb section shall match adjacent curb.
9. Basin floors shall have wood trowel finish and a minimum slope of 12:3 from all directions toward outlet pipe.
10. Set inlet so that grate bars are parallel to direction of principal surface flow.
11. See Revised Standard Plans D77A and D77B for grate and frame details and weights of miscellaneous iron and steel.
12. See Standard Plan D78A for gutter depression details.
13. This dimenison will vary with different grates, curbs types, box width and wall thickness.
14. Bar may be rotated as necessary to clear opening. Where "L" is 6" or less, bar may be omitted.
15. Where "L" is 6" or less, wall thickness shall be as shown in Table A.
16. Cast-in-place inlets to be formed around all pipes/stubs intersecting the inlet, and concrete poured in one continuous operation. Precast inlets shall have mortared connections conforming to details for Type GCP Inlet shown on Standard Plan D75B. See Standard Specifications for mortar composition.

TABLE A

CONCRETE QUANTITIES				
TYPE	H=3'-0" TO 8'-0" (T=6")		H=8'-1" TO 20'-0" (T=8")	
	H=3'-0" (CY)	ADDITIONAL PCC PER FOOT (CY)	H=8'-1" (CY)	ADDITIONAL PCC PER FOOT (CY)
G-1	0.95	0.220	See Note A	SEE NOTE A
G-2*	1.31	0.255	3.50	0.357
G-3	1.03	0.220	See Note A	SEE NOTE A
G-4* (TYPE 24)	1.27	0.255	3.48	0.357
G-4* (TYPE 18)	1.30	0.255	3.50	0.357
G-5	1.02	0.220	SEE NOTE A	SEE NOTE A
G-6	1.04	0.220	SEE NOTE A	SEE NOTE A

TABLE BASED ON 8" FLOOR SLAB. NO DEDUCTIONS ARE TO BE MADE TO THESE QUANTITIES BECAUSE OF PIPE OPENINGS, DIFFERENT FLOOR ALTERNATIVES OR DIFFERENT CURB TYPES. * QUANTITIES FOR TYPE G-2 AND G-4 INLETS BASED ON THE MINIMUM INTERIOR DIMENSIONS.

NOTE A:

Maximum allowable height 6'-0".

STATE OF CALIFORNIA
DEPARTMENT OF TRANSPORTATION

DRAINAGE INLETS

NO SCALE

RSP D73 DATED OCTOBER 19, 2012 SUPERSEDES STANDARD PLAN D73 DATED MAY 20, 2011 - PAGE 156 OF THE STANDARD PLANS BOOK DATED 2010.

REVISED STANDARD PLAN RSP D73

2010 REVISED STANDARD PLAN RSP D73

7-19-12

Dist	COUNTY	ROUTE	POST MILES TOTAL PROJECT	SHEET No.	TOTAL SHEETS
01	Men	128	30.1/48.5	47	52

REGISTERED CIVIL ENGINEER

October 30, 2015
PLANS APPROVAL DATE

REGISTERED PROFESSIONAL ENGINEER Carl M. Duan No. C59976 Exp. 6-30-16 CIVIL STATE OF CALIFORNIA

THE STATE OF CALIFORNIA OR ITS OFFICERS OR AGENTS SHALL NOT BE RESPONSIBLE FOR THE ACCURACY OR COMPLETENESS OF SCANNED COPIES OF THIS PLAN SHEET.

TO ACCOMPANY PLANS DATED 4-25-16

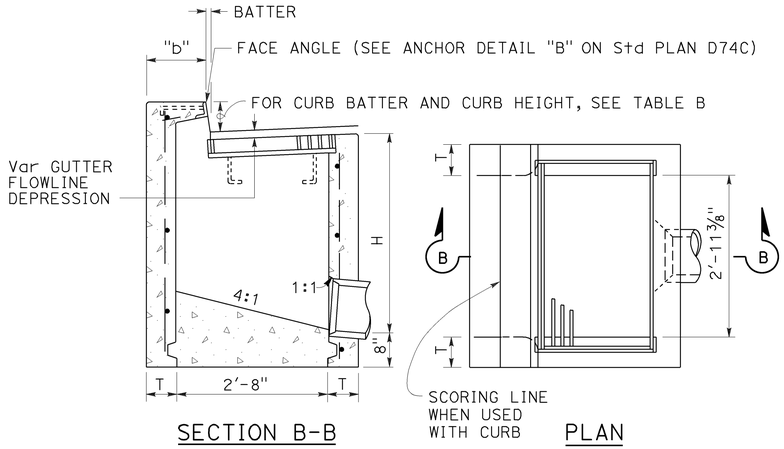

SECTION B-B PLAN

TYPE GO

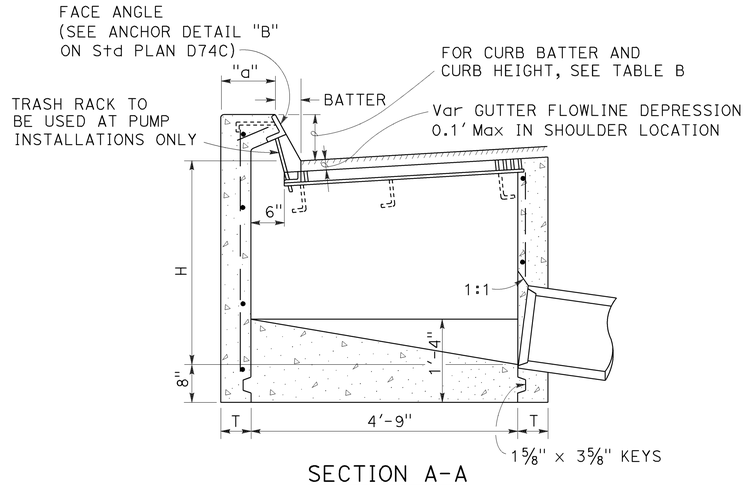

SECTION A-A

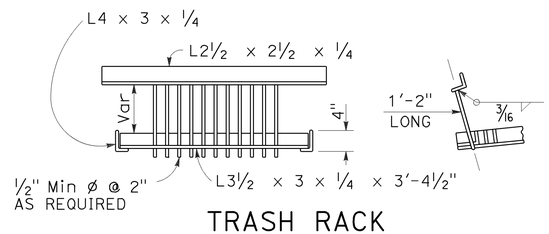

TRASH RACK

(For use with pump installation)

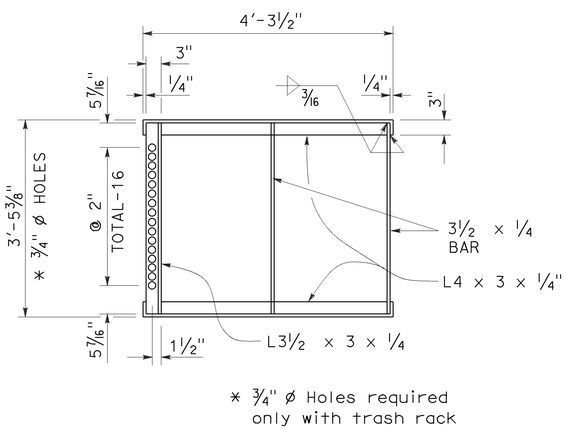

* 3/4" ø Holes required only with trash rack

GRATE FRAME FOR TYPE GDO INLET

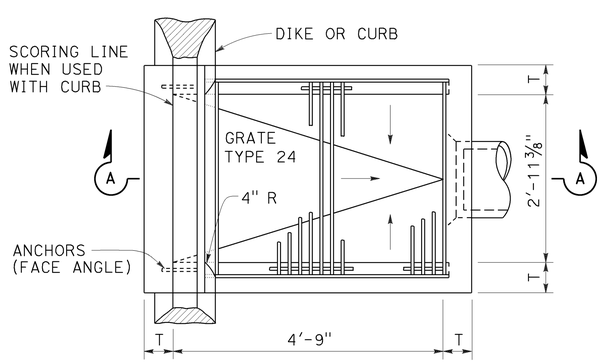

PLAN

TYPE GDO

TABLE A

CONCRETE QUANTITIES				
TYPE	H=3'-0" TO 8'-0" (T=6")		H=8'-1" TO 20'-0" (T=8")	
	H=3'-0" (CY)	ADDITIONAL PCC PER FOOT (CY)	H=8'-1" (CY)	ADDITIONAL PCC PER FOOT (CY)
GO	1.24	0.245	3.39	0.346
GDO	1.62	0.322	4.36	0.446

Table based on 8" floor slab, and curb type giving highest quantity of concrete. no deductions or adjustments are to be made to these quantities because of pipe openings, different floor alternatives or different curb type.

TABLE B

CURB TYPE	NORMAL CURB HEIGHT	CURB BATTER	"a" DIMENSION	"b" DIMENSION
A1-6	6"	1 1/2"	T+7 1/2"	T+6 1/2"
A1-8	8"	2"	T+7"	T+6"
B1-6	6"	4"	T+5"	T+4"
TYPE A DIKE	6"	3"	T+6"	T+5"

NOTES:

1. "H" is the difference in elevation between the outlet pipe flow line and the normal gutter grade line undepressed.
2. For "T" wall thickness, see Table A below.
3. Wall reinforcing not required when "H" is 8'-0" or less and the unsupported width or length is 7'-0" or less. Walls exceeding these limits shall be reinforced with #4 @ 18"± centers placed 1 1/2" clear to inside of box unless otherwise shown.
4. Inlet bottom reinforcing not required. See Standard Plan D74C for alternative reinforced bottom.
5. Steps - None required where "H" is less than 2'-6" Where "H" is 2'-6" or more, install steps with lowest rung 1'-0" above the floor and highest rung not more than 6" below top of inlet. The distance between steps shall not exceed 1'-0" and shall be uniform throughout the length of the wall. Place steps in the wall without an opening. Step inserts may be substituted for the bar steps. Step Inserts shall comply with State Industrial Safety requirements. See Standard Plan D74C for step details.
6. When shown on the project plans, place a 3/4" plain round protection bar horizontally across the length of the opening and bend back 4" into the inlet wall on each side.
7. Pipe(s) can be placed in any wall.
8. Curb section shall match adjacent curb.
9. Basin floors shall have wood trowel finish and shall slope toward the outlet pipe as shown.
10. See Revised Standard Plans RSP D77A and RSP D77B for grate and frame details and weights of miscellaneous iron and Steel.
11. See Standard Plan D78A for gutter depression details.
12. Complete joint penetration butt welds may be substituted for the fillet welds on all anchors.
13. Standard square, hexagon, round or equivalent headed anchors may be substituted for the right angle hooks on the anchors shown on this plan.
14. Cast-in-place inlets to be formed around all pipes/stubs intersecting the inlet and concrete poured in one continuous operation. Precast inlets shall have mortared pipe connections conforming to details for Type GCP inlets on Revised Standard Plan RSP D75B. See Standard Specifications for mortar composition.

STATE OF CALIFORNIA
DEPARTMENT OF TRANSPORTATION

DRAINAGE INLETS

NO SCALE

RSP D74B DATED OCTOBER 30, 2015 SUPERSEDES STANDARD PLAN D74B DATED MAY 20, 2011 - PAGE 159 OF THE STANDARD PLANS BOOK DATED 2010.

REVISED STANDARD PLAN RSP D74B

2010 REVISED STANDARD PLAN RSP D74B

10-13-15

Dist	COUNTY	ROUTE	POST MILES TOTAL PROJECT	SHEET No.	TOTAL SHEETS
01	Men	128	30.1/48.5	48	52

Raymond Don Tsztoo
REGISTERED CIVIL ENGINEER

April 19, 2013
PLANS APPROVAL DATE

Raymond Don Tsztoo No. C37332 Exp. 6-30-14 CIVIL STATE OF CALIFORNIA REGISTERED PROFESSIONAL ENGINEER

THE STATE OF CALIFORNIA OR ITS OFFICERS OR AGENTS SHALL NOT BE RESPONSIBLE FOR THE ACCURACY OR COMPLETENESS OF SCANNED COPIES OF THIS PLAN SHEET.

TO ACCOMPANY PLANS DATED 4-25-16

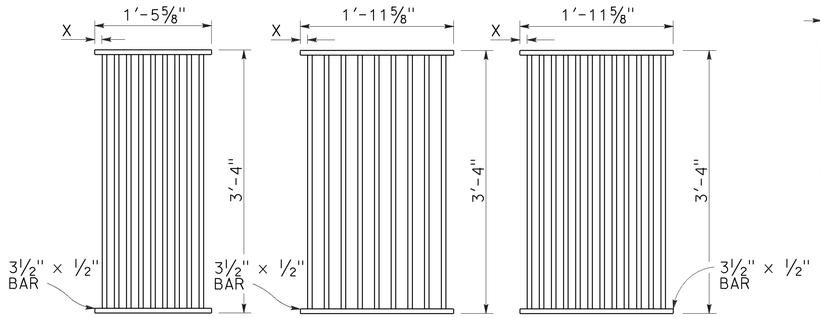

TYPE 18-9

1⅜" Clear spacing. Use within the roadbed on highways where bicycles and pedestrians are excluded.

TYPE 24-9

2" Clear spacing. Use in locations off the roadbed on all types of highways.

TYPE 24-12

1⅜" Clear spacing. Use within the roadbed on highways where bicycles and pedestrians are excluded.

RECTANGULAR GRATE DETAILS

(See table below)

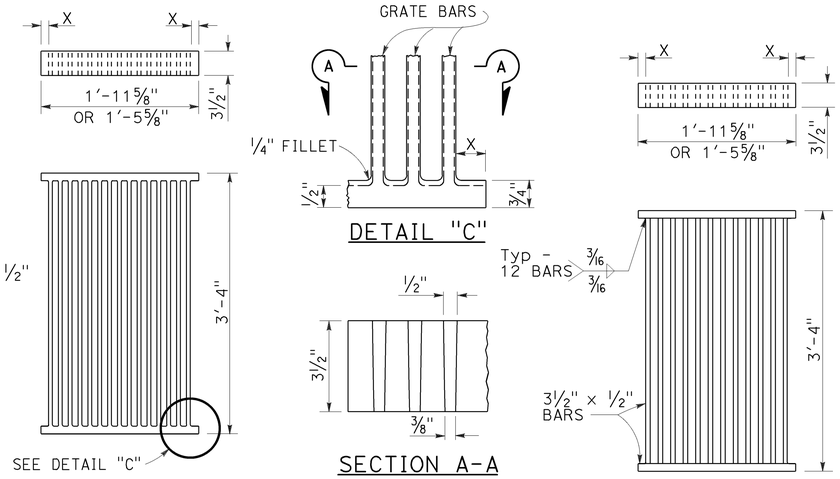

ALTERNATIVE CAST DUCTILE IRON GRATE OR CAST CARBON STEEL GRATE

ALTERNATIVE WELDED GRATE

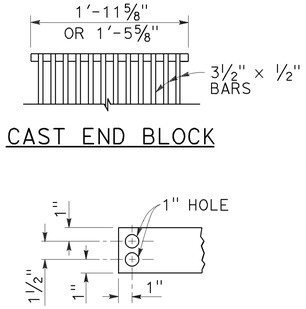

CAST END BLOCK

END OF BAR

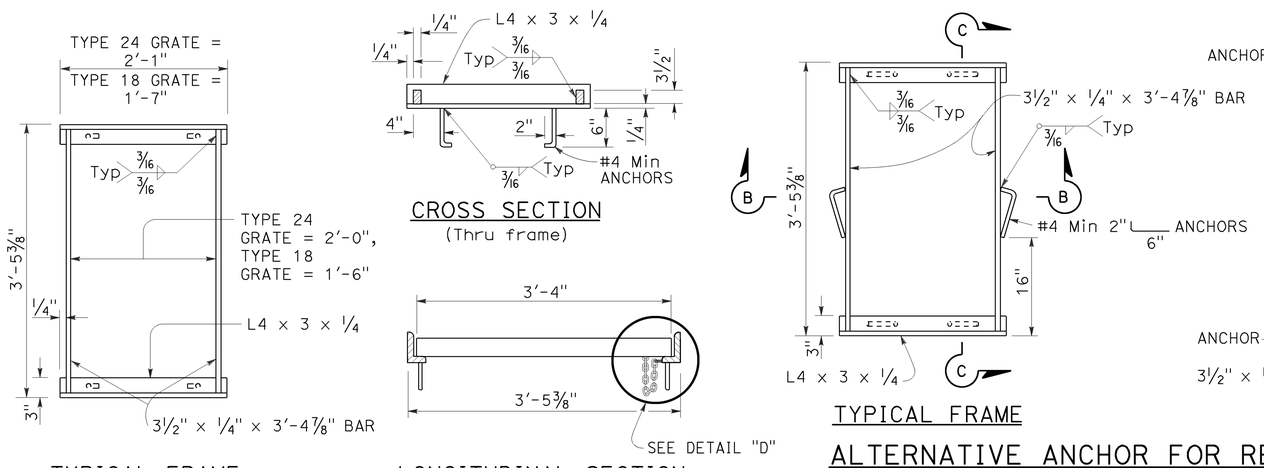

TYPICAL FRAME

CROSS SECTION
(Thru frame)

LONGITUDINAL SECTION
(Thru frame and grate)

RECTANGULAR FRAME DETAILS

(For all rectangular grates)

TYPICAL FRAME

SECTION B-B

SECTION C-C

ALTERNATIVE ANCHOR FOR RECTANGULAR FRAME

(For details not shown, See Rectangular Frame Details)

ALTERNATIVE CAST DUCTILE IRON OR CAST CARBON STEEL END BLOCK GRATE

NOTES:

1. Grate type numbers refer to approximate width of grate in inches and number of bars, respectively.
2. Contractor has the option of using cast ductile iron, cast carbon steel, welded, bolted, or cast end block grate.
3. Rounded top of bars optional on all grates.
4. Pipe inlets with a grate shall be placed so that bars parallel direction of principle surface flow.
5. Complete joint penetration butt welds may be substituted for the fillet welds on all anchors.
6. Standard square, hexagon, round or equivalent headed anchors may be substituted for the right angle hooks on the anchors shown on this plan.
7. Grate and frame weights are based on welded grates (weights of face angles, steps, protection bars, etc. are not included).
8. Connect chain to grate and frame only at locations shown on the plans. When chain is required, do not use cast ductile iron grates.

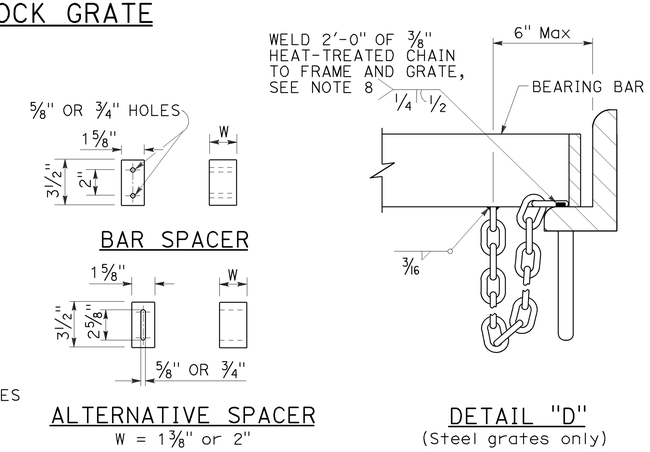

BAR SPACER

ALTERNATIVE SPACER
W = 1⅜" or 2"

DETAIL "D"
(Steel grates only)

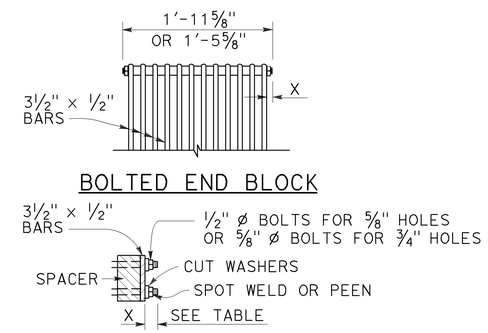

BOLTED END BLOCK

BOLTING DETAIL

ALTERNATIVE BOLTED GRATE

GRATE BAR SPACING TABLE

TYPE	No. OF BARS	CLEAR BAR SPACING	X
18-9	9	1⅜"	1 1/16"
24-9	9	2"	1 9/16"
24-12	12	1⅜"	1¼"

INLET TYPE	COVER TYPE	WEIGHT LB
OS	PLATE	174
OL-7	PLATE	170
OL-10	PLATE	170
OL-14	PLATE	170
OL-21	PLATE	170
OCP	PLATE	112
OCPI	PLATE	112
OCPI	REDWOOD	42
OMP	PLATE	177
OMPI	PLATE	177

INLET TYPE	GRATE TYPE	No. OF GRATES	WEIGHT LB
GDO	24-12	2	634
GOL-7	24-12	1	326
GOL-10	24-12	1	326
GO,G1,G2,G3,G4 (TYPE 24)	24-9	1	263
	24-12	1	326
G4 (TYPE 18),G5,G6	18-9	1	249
GT1	18-9	2	498
GT2	18-9	2	498
GT3	24-12	2	652
GT4	24-12	2	652
TRASH RACK			22
GRATE CHAIN			3

BASIS FOR Misc IRON & STEEL FINAL PAY WEIGHTS FOR DRAINAGE INLETS

(See Note 7)

STATE OF CALIFORNIA
DEPARTMENT OF TRANSPORTATION

GRATE DETAILS No. 1

NO SCALE

RSP D77A DATED APRIL 19, 2013 SUPERSEDES RSP D77A DATED JULY 20, 2012 AND STANDARD PLAN D77A DATED MAY 20, 2011 - PAGE 164 OF THE STANDARD PLANS BOOK DATED 2010.

REVISED STANDARD PLAN RSP D77A

2010 REVISED STANDARD PLAN RSP D77A

4-4-13

Dist	COUNTY	ROUTE	POST MILES TOTAL PROJECT	SHEET No.	TOTAL SHEETS
01	Men	128	30.1/48.5	49	52

Raymond Don Tsztoo
REGISTERED CIVIL ENGINEER

April 19, 2013
PLANS APPROVAL DATE

REGISTERED PROFESSIONAL ENGINEER Raymond Don Tsztoo No. C37332 Exp. 6-30-14 CIVIL STATE OF CALIFORNIA

THE STATE OF CALIFORNIA OR ITS OFFICERS OR AGENTS SHALL NOT BE RESPONSIBLE FOR THE ACCURACY OR COMPLETENESS OF SCANNED COPIES OF THIS PLAN SHEET.

TO ACCOMPANY PLANS DATED 4-25-16

2010 REVISED STANDARD PLAN RSP D77B

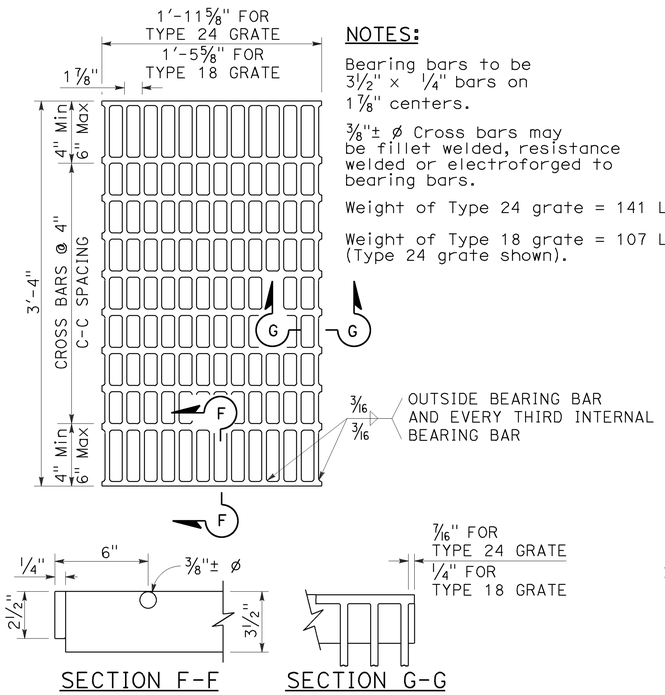

SECTION F-F SECTION G-G

TYPE 18-10 AND 24-13 GRATE

(Welded Steel)

NOTES:

Bearing bars to be 3½" × ¼" bars on 1⅞" centers.

⅜"± ø Cross bars may be fillet welded, resistance welded or electroforged to bearing bars.

Weight of Type 24 grate = 141 LBS.

Weight of Type 18 grate = 107 LBS. (Type 24 grate shown).

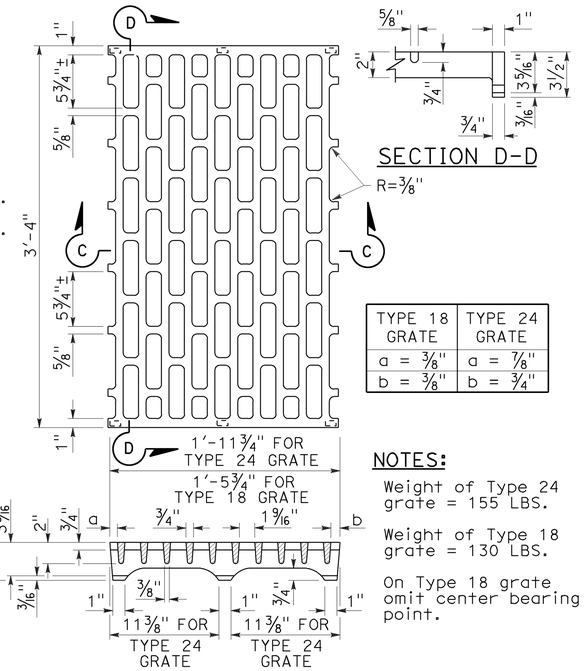

SECTION D-D

TYPE 18 GRATE	TYPE 24 GRATE
a = ⅜"	a = ⅞"
b = ⅜"	b = ¾"

NOTES:

Weight of Type 24 grate = 155 LBS.

Weight of Type 18 grate = 130 LBS.

On Type 18 grate omit center bearing point.

SECTION C-C

TYPE 18-8C AND 24-10C GRATE

(Cast ductile iron)

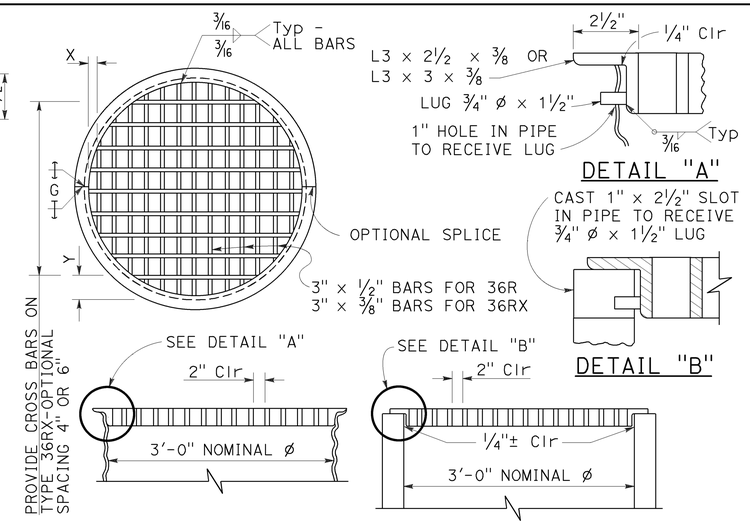

DETAIL "A"

DETAIL "B"

TYPE 36R AND 36RX GRATE DETAILS

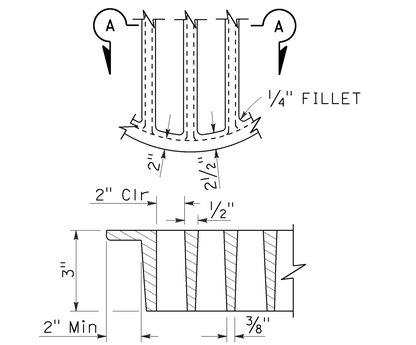

SECTION A-A

ALTERNATIVE CAST DUCTILE IRON GRATE OR CAST CARBON STEEL GRATE TYPE 36R AND 36RX

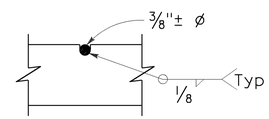

⅜"± ø Cross bars may be fillet welded, resistance welded or electroforged to bearing bars.

CROSS BAR DETAIL TYPE 36RX GRATE (WELDED STEEL)

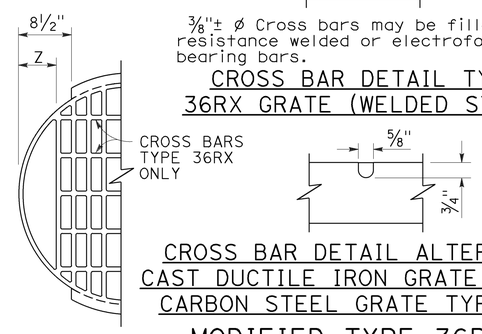

CROSS BAR DETAIL ALTERNATIVE CAST DUCTILE IRON GRATE OR CAST CARBON STEEL GRATE TYPE 36RX

MODIFIED TYPE 36R AND 36RX GRATE FOR ODI INLET

NOTES:

1. When alternative grates are allowed - Final pay based on alternative with the lesser weight.
2. Use frame shown on Standard Plan D74A, D74B or RSP D77A as appropriate.
3. When Type 24-10S, 24-12X or 24-13 grates are used with GDO Inlets, a ¼" × 3½" × 3'-4⅞" steel bar shall be welded across the center of inlet frame to separate the individual grates.
4. See Revised Standard Plan RSP D77A for connecting chain to welded grate and frame. When chain is required, do not use cast ductile iron grate.

BASIS FOR Misc IRON AND STEEL FINAL PAY WEIGHTS FOR DRAINAGE INLETS

INLET TYPE	GRATE TYPE	No. OF GRATES	WEIGHT LB
GDO (SEE NOTE 4)	24-10C	2	391
	24-10S	2	456
	24-12X	2	473
	24-13	2	374
GO,GOL,G1,G2, G3,G4 (TYPE 24)	24-10C	1	202
	24-10S	1	229
	24-12X	1	239
	24-13	1	188
G4 (TYPE 18) G5,G6	18-8S	1	187
	18-9X	1	187
	18-10	1	149
GT1,GT2	18-8S	2	374
	18-9X	2	374
	18-10	2	298
GT3,GT4	24-10C	2	404
	24-10S	2	458
	24-12X	2	478
	24-13	2	376
ODI	36RX (Mod)	1	196
GMP,GCP,GCPI	36RX	1	215
ODI	36R (Mod)	1	220
GMP,GCP,GCPI	36R	1	236
TRASH RACK			22
GRATE CHAIN			3

GRATE BAR SPACING TABLE

TYPE	No. OF BARS	CLEAR BAR SPACING	X	Y 4" SPACING	Y 6" SPACING	Z
36R	13	2"	2⅛"	-	-	-
36RX (STEEL)	15	2"	9/16"	3¾"	5¾"	-
36RX (CAST)	13	2"	2⅛"	3¾"	5¾"	-
36R Mod	12	2"	2⅛"	-	-	5"
36RX Mod (STEEL)	13	2"	9/16"	3¾"	5¾"	5 11/16"
36RX Mod (CAST)	12	2"	2⅛"	3¾"	5¾"	5"

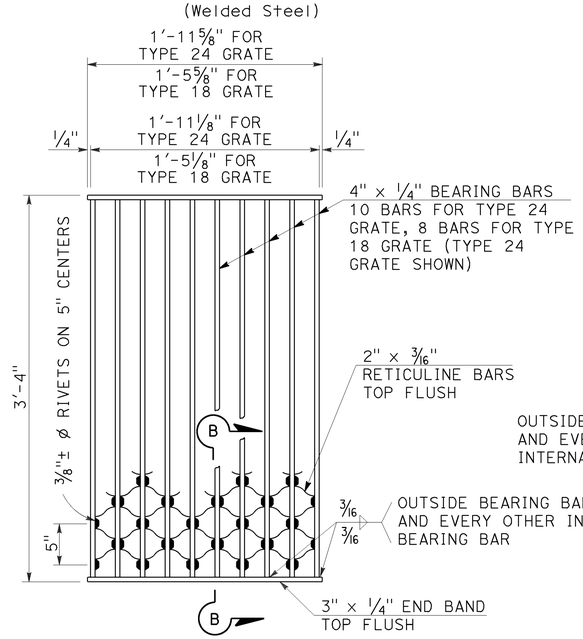

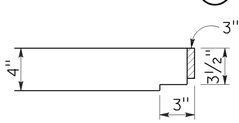

NOTES:

Weight of Type 24 grate = 182 LBS.
Weight of Type 18 grate = 145 LBS.

SECTION B-B

TYPE 18-8S AND 24-10S GRATE

(Welded Steel) Reticuline type

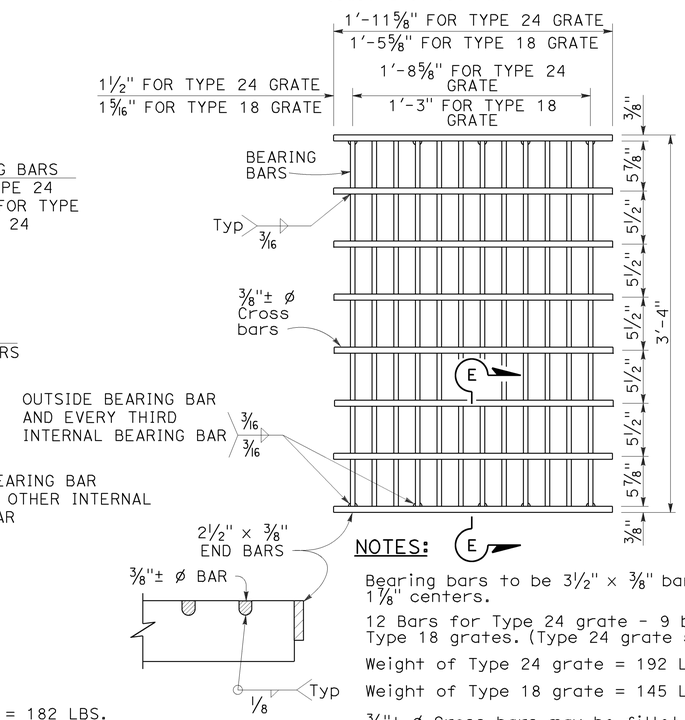

SECTION E-E

NOTES:

Bearing bars to be 3½" × ⅜" bars on 1⅞" centers.

12 Bars for Type 24 grate - 9 bars for Type 18 grates. (Type 24 grate shown).

Weight of Type 24 grate = 192 LBS.

Weight of Type 18 grate = 145 LBS.

⅜"± ø Cross bars may be fillet welded, resistance welded or electroforged to bearing bars.

TYPE 18-9X AND 24-12X GRATE

(Welded Steel)

STATE OF CALIFORNIA
DEPARTMENT OF TRANSPORTATION

GRATE DETAILS No. 2

NO SCALE

RSP D77B DATED APRIL 19, 2013 SUPERSEDES RSP D77B DATED JULY 20, 2012 AND STANDARD PLAN D77B DATED MAY 20, 2011 - PAGE 165 OF THE STANDARD PLANS BOOK DATED 2010.

REVISED STANDARD PLAN RSP D77B

4-4-13

Dist	COUNTY	ROUTE	POST MILES TOTAL PROJECT	SHEET No.	TOTAL SHEETS
01	Men	128	30.1/48.5	50	52

Raymond Don Tsztoo
REGISTERED CIVIL ENGINEER

October 30, 2015
PLANS APPROVAL DATE

REGISTERED PROFESSIONAL ENGINEER
Raymond Don Tsztoo
No. C37332
Exp. 6-30-16
CIVIL
STATE OF CALIFORNIA

THE STATE OF CALIFORNIA OR ITS OFFICERS OR AGENTS SHALL NOT BE RESPONSIBLE FOR THE ACCURACY OR COMPLETENESS OF SCANNED COPIES OF THIS PLAN SHEET.

TO ACCOMPANY PLANS DATED 4-25-16

ANNULAR AND HELICAL PROFILE

COUPLING TYPE	PIPE CORRUGATION	PIPE SIZE	W OR A	PIPE WALL THICKNESS		BAND THICKNESS		BAR AND STRAP (CSP ONLY)				ANGLE						
												DIMENSIONS		BOLTS (No.- Dia)		RIVETS ANGLE TO BAND		SPOT WELDS ANGLE TO BAND
				CSP	CAP	CSP	CAP	STRAP THICKNESS	BOLTS Dia	BAR Dia	BAR YIELD STRENGTH	CSP	CAP	CSP	CAP	CSP	CAP	CSP
TWO PIECE INTEGRAL FLANGE	1½′ × ¼"	6"	7"	0.064"-0.168"		0.052"								3-⅜"				
	1½′ × ¼"	8"-10"	7"	0.064"-0.168"	0.060"-0.164"	0.064"	0.060"							3-⅜"	3-⅜"			
ANNULAR	2⅔" × ½"	THROUGH 24"	12"	0.064"-0.168"	0.060"-0.164"	0.064"	0.060"					2" × 2" × 3/16"	2" × 2" × 3/16"	3-½"	3-½"	3-⅜"	3-⅜"	3-½"
HUGGER	2⅔" × ½" REROLLED END	THROUGH 24"	10½"	0.064"-0.168"		0.064"		0.079"	½"	⅞"	32 ksi							

SPIRAL RIB PROFILE

COUPLING TYPE	PIPE CORRUGATION	PIPE SIZE	W	PIPE WALL THICKNESS		BAND THICKNESS		BAR AND STRAP (SSRP ONLY)				ANGLE						
												DIMENSIONS		BOLTS (No.- Dia)		RIVETS ANGLE TO BAND		SPOT WELDS ANGLE TO BAND
				SSRP	ASRP	SSRP	ASRP	STRAP THICKNESS	BOLTS Dia	BAR Dia	BAR YIELD STRENGTH	SSRP	ASRP	SSRP	ASRP	SSRP	ASRP	SSRP
ANNULAR	2⅔" × ½" * REROLLED END	24"	12"	0.064"-0.168"	0.060"-0.164"	0.064"	0.060"					2" × 2" × 3/16"	2" × 2" × 3/16"	3-½"	3-½"	3-⅜"	3-⅜"	3-½"
HUGGER	2⅔" × ½" * REROLLED END	24"	10½"	0.064"-0.168"		0.064"		0.079"	½"	⅞"	32 ksi							

* See Note 11.

11. All profiles of Spiral Rib Pipe (¾" × ¾" ribs at 7½" pitch and ¾" × 1" ribs at 11½" pitch in both steel and aluminum and ¾" × 1" ribs at 8½" pitch in steel only) shall be manufactured with rerolled ends. Corrugation profile of the rerolled ends shall be 2⅔" × ½" annual corrugations with a minimum of two full corrugations at each end.

NOTES:

1. For helically corrugated coupling bands, the connection angles may be oriented parallel to the pipe axis, provided connecting holes are slotted lengthwise sufficiently to allow adjustment for the helix angle.
2. Tension strap may be connected to band with either spot welds or fillet welds that develop minimum required strength of strap.
3. Use 1¼" gage line dimension on attached angle leg for rivets and spot welds.
4. Band thickness shall not be less than:
   a. 3 standard thicknesses lighter than the thickness of the pipe for Corrugated Steel Pipe.
   b. 2 standard thicknesses lighter than the thickness of the pipe and in no case lighter than 0.060" for Corrugated Aluminum Pipe.
5. Dimensions, thicknesses and strengths shown are minimum.
6. For pipe arches use same width band as for round pipe of equal periphery.
7. Fillet welds of equivalent strength may be substituted for spot welds or rivets.
8. Spot welds shall develop minimum required strength of strap.
9. Pipe with rerolled ends having at least two 2⅔" × ½" annular corrugations at each end with or without an upturned flange may be connected with any of the annular coupling bands shown for pipe of the same diameter and wall thickness and having 2⅔" × ½" corrugations.
10. For downdrain applications, two piece integral flange couplers shall have factory applied sleeve type rubber gaskets with a minimum length of 7" measured along the length of the pipe.

STATE OF CALIFORNIA
DEPARTMENT OF TRANSPORTATION

CORRUGATED METAL PIPE COUPLING DETAILS No. 7 DOWNDRAIN

NO SCALE

RSP D97G DATED OCTOBER 30, 2015 SUPERSEDES STANDARD PLAN D97G DATED MAY 20, 2011 - PAGE 202 OF THE STANDARD PLANS BOOK DATED 2010.

REVISED STANDARD PLAN RSP D97G

2010 REVISED STANDARD PLAN RSP D97G

8-19-15

Dist	COUNTY	ROUTE	POST MILES TOTAL PROJECT	SHEET No.	TOTAL SHEETS
01	Men	128	30.1/48.5	51	52

Gregory A. Balzer
LICENSED LANDSCAPE ARCHITECT

July 19, 2013
PLANS APPROVAL DATE

THE STATE OF CALIFORNIA OR ITS OFFICERS OR AGENTS SHALL NOT BE RESPONSIBLE FOR THE ACCURACY OR COMPLETENESS OF SCANNED COPIES OF THIS PLAN SHEET.

LICENSED LANDSCAPE ARCHITECT — Gregory A. Balzer 2576 — 02-28-15 Renewal Date — 7-19-13 Date — STATE OF CALIFORNIA

TO ACCOMPANY PLANS DATED 4-25-16

A

AB	AGGREGATE BASE
ABS	ACRYLONITRILE-BUTADIENE-STYRENE
AC	ASPHALT CONCRETE
ACC	ARMOR-CLAD CONDUCTORS
Adj	ADJACENT/ADJUSTABLE
AIC	AUXILIARY IRRIGATION CONTROLLER
Alt	ALTERNATIVE
AMEND	AMENDMENT
ARV	AIR RELEASE VALVE
AUTO	AUTOMATIC
AUX	AUXILIARY
AVB	ATMOSPHERIC VACUUM BREAKER

B

B&B	BALLED AND BURLAPPED
B/B	BRASS/BRONZE
B/B/PL	BRASS/BRONZE/PLASTIC
B/PL	BRASS/PLASTIC
BFM	BONDED FIBER MATRIX
Bit Ctd	BITUMINOUS COATED
BP	BOOSTER PUMP
BPA	BACKFLOW PREVENTER ASSEMBLY
BPE	BACKFLOW PREVENTER ENCLOSURE
BV	BALL VALVE

C

C	CONDUIT
CAP	CORRUGATED ALUMINUM PIPE
CARV	COMBINATION AIR RELEASE VALVE
CB	COUPLING BAND
CCA	CAM COUPLER ASSEMBLY
CEC	CONTROLLER ENCLOSURE CABINET
CHDPE	CORRUGATED HIGH DENSITY POLYETHYLENE
CL	CHAIN LINK
CNC	CONTROL AND NEUTRAL CONDUCTORS
Conc	CONCRETE
CP	COPPER PIPE
CS	COMPOST SOCK
CSP	CORRUGATED STEEL PIPE
CST	CENTER STRIP
CV	CHECK VALVE

D

Dia	DIAMETER
DIP	DUCTILE IRON PIPE
DIT	DRIP IRRIGATION TUBING
DG	DECOMPOSED GRANITE
DN	DIAMETER NOMINAL
DVA	DRIP VALVE ASSEMBLY

E

EC	EROSION CONTROL
ECTC	EROSION CONTROL TECHNOLOGY COUNCIL
Elect	ELECTRIC/ELECTRICAL
Elev	ELEVATION
ELL	ELBOW
ENCL	ENCLOSURE
EP	EDGE OF PAVEMENT
ES	EDGE OF SHOULDER
EST	END STRIP
ESTB	ESTABLISHMENT
ETW	EDGE OF TRAVELED WAY

F

F	FULL CIRCLE
F/P	FULL/PART CIRCLE
FCV	FLOW CONTROL VALVE
FERT	FERTILIZER
FG	FINISHED GRADE
FH	FLEXIBLE HOSE
FIPT	FEMALE IRON PIPE THREAD
FIS	FERTILIZER INJECTOR SYSTEM
FL	FLOW LINE
FR	FIBER ROLL
FS	FLOW SENSOR
FSC	FLOW SENSOR CABLE
FV	FLUSH VALVE

G

Galv	GALVANIZED
GARV	GARDEN VALVE
GARVA	GARDEN VALVE ASSEMBLY
GM	GRAVEL MULCH
GPH	GALLONS PER HOUR
GPM	GALLONS PER MINUTE
GSP	GALVANIZED STEEL PIPE
GV	GATE VALVE

H

H	HALF CIRCLE
HDPE	HIGH DENSITY POLYETHYLENE
HP	HORSEPOWER/HINGE POINT
HPL	HIGH PRESSURE LINE
Hwy	HIGHWAY

I

IC	IRRIGATION CONTROLLER
ICC	IRRIGATION CONTROLLER(S) IN CONTROLLER ENCLOSURE CABINET
ID	INSIDE DIAMETER
IFS	IRRIGATION FILTRATION SYSTEM
IPS	IRON PIPE SIZE
IPT	IRON PIPE THREAD
Irr	IRRIGATION

L

L	LENGTH

M

Max	MAXIMUM
MBGR	METAL BEAM GUARD RAILING
MCV	MANUAL CONTROL VALVE
MIC	MASTER IRRIGATION CONTROLLER
Min	MINIMUM
MIPT	MALE IRON PIPE THREAD
Misc	MISCELLANEOUS
Mtl	MATERIAL
MVP	MAINTENANCE VEHICLE PULLOUT

N

NCN	NO COMMON NAME
NL	NOZZLE LINE
No.	NUMBER
NPT	NATIONAL PIPE THREAD

O

O/C	ON CENTER
OD	OUTSIDE DIAMETER
OL	OVERLAP

P

P	PART CIRCLE
PB	PULL BOX
PCC	PORTLAND CEMENT CONCRETE
PE	POLYETHYLENE
Pkt	PACKET
PL	PLASTIC
PLS	PURE LIVE SEED
PLT	PLANT/PLANTING
PLT ESTB	PLANT ESTABLISHMENT
PM	POST MILE
PR	PRESSURE RATED
PRLV	PRESSURE RELIEF VALVE
PRV	PRESSURE REGULATING VALVE
PVC	POLYVINYL CHLORIDE
Pvmt	PAVEMENT

Q

Q	QUARTER CIRCLE
QCV	QUICK COUPLING VALVE

R

R	RADIUS
RCP	REINFORCED CONCRETE PIPE
RCV	REMOTE CONTROL VALVE
RCVM	REMOTE CONTROL VALVE (MASTER)
RCVMF	REMOTE CONTROL VALVE (MASTER) W/FLOW SENSOR
RCVP	REMOTE CONTROL VALVE W/PRESSURE REGULATOR
RCW	RECYCLED WATER
RECP	ROLLED EROSION CONTROL PRODUCT
REQ	REQUIRED
RICS	REMOTE IRRIGATION CONTROL SYSTEM
R/W	RIGHT OF WAY

S

S	SLIP
SCH	SCHEDULE
SF	STATE-FURNISHED
Shld	SHOULDER
Sq	SQUARE
SST	SIDE STRIP
Sta	STATION
Std	STANDARD
SW	SIDEWALK/SOUND WALL

T

T	THIRD CIRCLE/THREAD
TLS	TRUCK LOADING STANDPIPE
TQ	THREE QUARTER CIRCLE
TRM	TURF REINFORCEMENT MAT
TT	TWO-THIRDS CIRCLE
TWSA	TREE WELL SPRINKLER ASSEMBLY
Typ	TYPICAL

U

UG	UNDERGROUND

W

W	WIDTH
W/	WITH
WM	WATER METER
WS	WYE STRAINER
WSA	WYE STRAINER ASSEMBLY
WSP	WELDED STEEL PIPE
WWM	WELDED WIRE MESH

NOTE:

For additional abbreviations, see Standard Plans A10A and A10B.

STATE OF CALIFORNIA
DEPARTMENT OF TRANSPORTATION

LANDSCAPE AND EROSION CONTROL ABBREVIATIONS

NO SCALE

RSP H1 DATED JULY 19, 2013 SUPERSEDES STANDARD PLAN H1 DATED MAY 20, 2011 - PAGE 218 OF THE STANDARD PLANS BOOK DATED 2010.

REVISED STANDARD PLAN RSP H1

2010 REVISED STANDARD PLAN RSP H1

6-28-13

Dist	COUNTY	ROUTE	POST MILES TOTAL PROJECT	SHEET No.	TOTAL SHEETS
01	Men	128	30.1/48.5	52	52

Gregory A. Balzer
LICENSED LANDSCAPE ARCHITECT

November 15, 2013
PLANS APPROVAL DATE

LICENSED LANDSCAPE ARCHITECT Gregory A. Balzer 2576 STATE OF CALIFORNIA
Gregory A. Balzer
02-25-14
(Expires) Date
2-28-15
(Expires) Date
11-15-13
Date

THE STATE OF CALIFORNIA OR ITS OFFICERS OR AGENTS SHALL NOT BE RESPONSIBLE FOR THE ACCURACY OR COMPLETENESS OF SCANNED COPIES OF THIS PLAN SHEET.

TO ACCOMPANY PLANS DATED 4-25-16

EXISTING	NEW	ITEM DESCRIPTION
		WATER METER (WM)
		BACKFLOW PREVENTER ASSEMBLY (BPA)
		BACKFLOW PREVENTER ENCLOSURE (BPE)
		BOOSTER PUMP (BP)
		TRUCK LOADING STANDPIPE (TLS)
	FS	FLOW SENSOR (FS)
		MASTER IRRIGATION CONTROLLER (MIC)
		AUXILIARY IRRIGATION CONTROLLER (AIC)
		IRRIGATION CONTROLLER (IC) IRRIGATION CONTROLLER (IC) (BATTERY) IRRIGATION CONTROLLER (IC) (SOLAR) IRRIGATION CONTROLLER (IC) (TWO WIRE) IRRIGATION CONTROLLER(S) IN CONTROLLER ENCLOSURE CABINET (ICC)
acc	ACC	ARMOR-CLAD CONDUCTORS (ACC)
cnc	CNC	CONTROL AND NEUTRAL CONDUCTORS (CNC)
		IRRIGATION CONDUIT
		EXTEND IRRIGATION CONDUIT
dip	DIP	DUCTILE IRON PIPE (SUPPLY LINE) (MAIN) (DIP)
		GALVANIZED STEEL PIPE (SUPPLY LINE) (MAIN) (GSP)
		GALVANIZED STEEL PIPE (SUPPLY LINE) (LATERAL) (GSP)
		PLASTIC PIPE (SUPPLY LINE) (MAIN)
		PLASTIC PIPE (SUPPLY LINE) (LATERAL)
cp	CP	COPPER PIPE (SUPPLY LINE)
dit	DIT	DRIP IRRIGATION TUBING
		REMOTE CONTROL VALVE (RCV) REMOTE CONTROL VALVE (MASTER) (RCVM) REMOTE CONTROL VALVE (MASTER) W/FLOW METER (RCVMF)
P	P	REMOTE CONTROL VALVE W/PRESSURE REGULATOR (RCVP)
		EXISTING MANUAL CONTROL VALVE (MCV)
V	V	DRIP VALVE ASSEMBLY (DVA)
Y	Y	WYE STRAINER ASSEMBLY (WSA)

EXISTING	NEW	ITEM DESCRIPTION
		GATE VALVE (GV)
		BALL VALVE (BV)
		QUICK COUPLING VALVE (QCV)
		CAM COUPLER ASSEMBLY (CCA)
		GARDEN VALVE ASSEMBLY (GARVA)
		PRESSURE REGULATING VALVE (PRV)
		PRESSURE RELIEF VALVE (PRLV)
		FLOW CONTROL VALVE (FCV)
		COMBINATION AIR RELEASE VALVE (CARV)
		CHECK VALVE (CV)
		FLUSH VALVE (FV)
		EXISTING NOZZLE LINE W/TURNING UNION
		EXISTING IRRIGATION SYSTEM
		EXISTING IRRIGATION SYSTEM TO BE REMOVED
		CHAIN LINK GATE
		QUICK COUPLING VALVE W/SPRINKLER PROTECTOR
3	3	SPRINKLER W/SPRINKLER PROTECTOR
	C	CONNECT TO EXISTING SYSTEM
		CAP
		CAP EXISTING
	FR	FIBER ROLL
	CS	COMPOST SOCK

RCV SIZE
IRRIGATION CONTROLLER
CONTROLLER STATION
VALVE IN PARALLEL (IF APPLICABLE)
GPM
QUANTITY OF SPRINKLERS (WHEN SHOWN)

* 2½"-A-2b-40-60

VALVE CODE

* VALVE CODES FOR EXISTING VALVES ARE SHOWN IN A DASHED ENCLOSURE.

STATE OF CALIFORNIA
DEPARTMENT OF TRANSPORTATION

LANDSCAPE AND EROSION CONTROL SYMBOLS

NO SCALE

RSP H2 DATED NOVEMBER 15, 2013 SUPERSEDES RSP H2 DATED JULY 19, 2013 AND STANDARD PLAN H2 DATED MAY 20, 2011 - PAGE 219 OF THE STANDARD PLANS BOOK DATED 2010.

REVISED STANDARD PLAN RSP H2

2010 REVISED STANDARD PLAN RSP H2

10-9-13