Dist	COUNTY	ROUTE	POST MILES TOTAL PROJECT	SHEET No.	TOTAL SHEETS
01	Men	101	R89.2	1	21

STATE OF CALIFORNIA **FED#ACNH-Q101(305)E**

DEPARTMENT OF TRANSPORTATION

PROJECT PLANS FOR CONSTRUCTION ON

STATE HIGHWAY

IN MENDOCINO COUNTY
NEAR LEGGETT
AT CEDAR CREEK ARCH CULVERT

TO BE SUPPLEMENTED BY STANDARD PLANS DATED 2010

INDEX OF PLANS

SHEET No.	DESCRIPTION
1	TITLE AND LOCATION MAP
2	TYPICAL CROSS SECTIONS
3-5	LAYOUTS
6	PROFILE
7-11	CONSTRUCTION DETAILS
12	DRAINAGE PLAN, PROFILE, DETAILS AND QUANTITIES
13	TRAFFIC HANDLING PLAN
14	SUMMARY OF QUANTITIES
15	EROSION CONTROL PLANS AND QUANTITIES
16-21	REVISED STANDARD PLANS

THE STANDARD PLANS LIST APPLICABLE TO THIS CONTRACT IS INCLUDED IN THE NOTICE TO BIDDERS AND SPECIAL PROVISIONS BOOK.

LOCATION MAP

LOCATION OF CONSTRUCTION
CEDAR CREEK ARCH CULVERT
BR No. 10-0226 PM R89.2

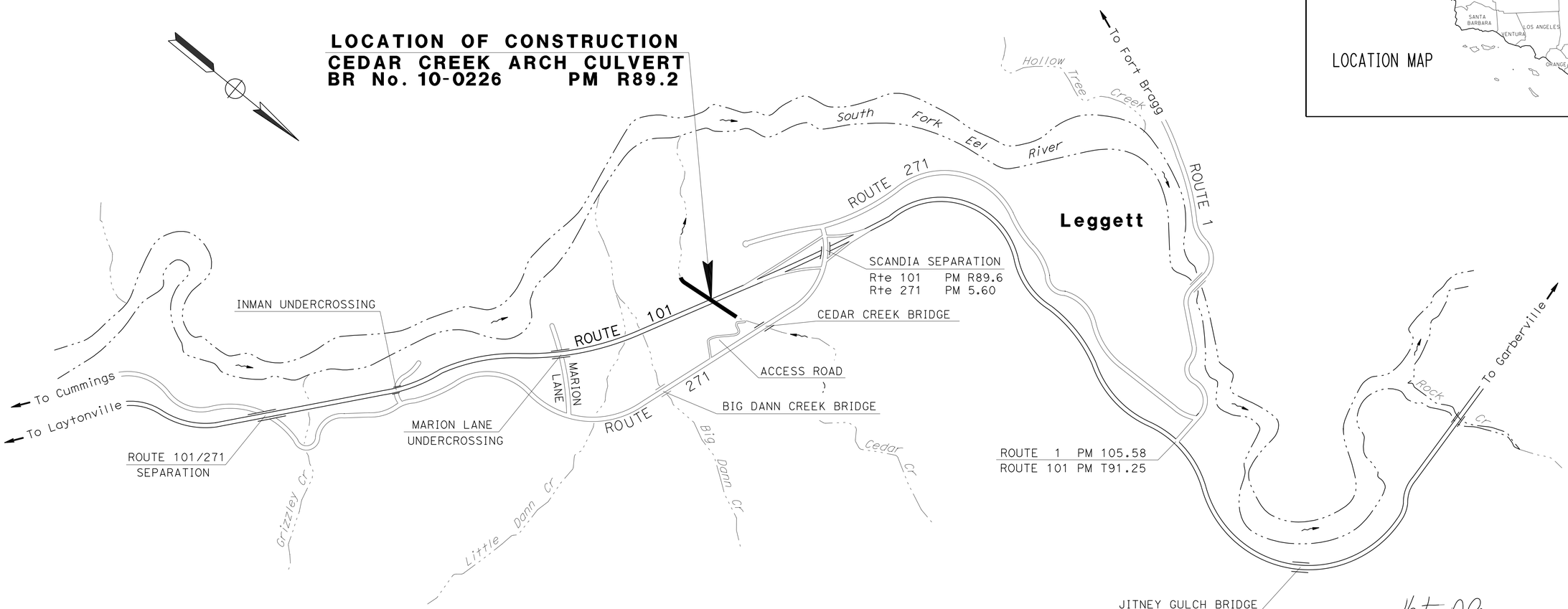

NO SCALE

THE CONTRACTOR SHALL POSSESS THE CLASS (OR CLASSES) OF LICENSE AS SPECIFIED IN THE "NOTICE TO BIDDERS."

Kristine D. Pepper 5-2-16
PROJECT ENGINEER DATE
REGISTERED CIVIL ENGINEER

May 2, 2016
PLANS APPROVAL DATE

REGISTERED PROFESSIONAL ENGINEER KRISTINE D. PEPPER No. 69113 Exp. 6-30-16 CIVIL STATE OF CALIFORNIA

THE STATE OF CALIFORNIA OR ITS OFFICERS OR AGENTS SHALL NOT BE RESPONSIBLE FOR THE ACCURACY OR COMPLETENESS OF SCANNED COPIES OF THIS PLAN SHEET.

CONTRACT No.	01-0C370
PROJECT ID	0112000283

P:\PROJ\01\0C370\drafting\sheets\0112000283ab001.dgn

DESIGN MANAGER: TIM BOESE
PROJECT MANAGER: STEVEN BLAIR

LAST REVISION 00-00-00
DATE PLOTTED => 21-JUN-2016
TIME PLOTTED => 09:02

Dist	COUNTY	ROUTE	POST MILES TOTAL PROJECT	SHEET No.	TOTAL SHEETS
01	Men	101	R89.2	2	21

REGISTERED CIVIL ENGINEER 5-2-16 DATE

May 2, 2016
PLANS APPROVAL DATE

REGISTERED PROFESSIONAL ENGINEER KRISTINE D. PEPPER No. 69113 Exp. 6-30-16 CIVIL STATE OF CALIFORNIA

THE STATE OF CALIFORNIA OR ITS OFFICERS OR AGENTS SHALL NOT BE RESPONSIBLE FOR THE ACCURACY OR COMPLETENESS OF SCANNED COPIES OF THIS PLAN SHEET.

NOTE:

1. DIMENSIONS OF THE PAVEMENT STRUCTURES (STRUCTURAL SECTIONS) ARE SUBJECT TO TOLERANCES SPECIFIED IN THE STANDARD SPECIFICATIONS.

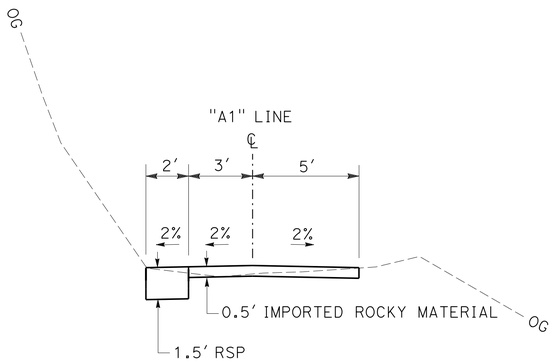

"A1" 100+62.00 TO 100+68.00

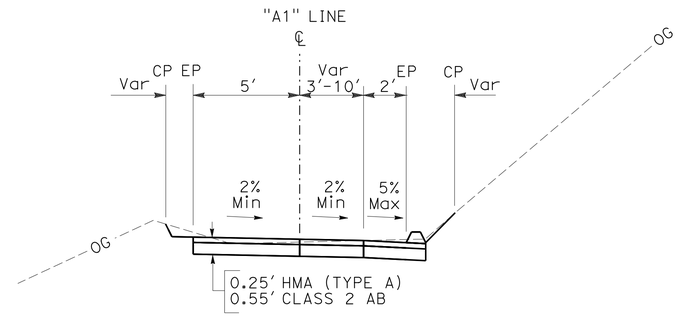

"A1" 104+11.54 TO 107+37.54

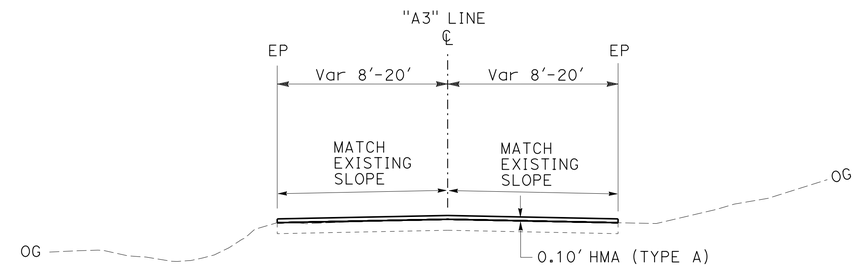

"A3" 300+00.00 TO 305+23.12

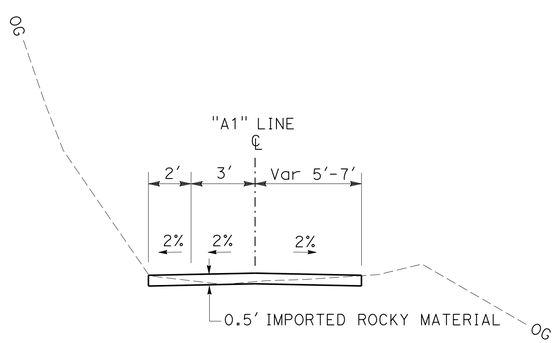

"A1" 100+00.00 TO 100+62.00

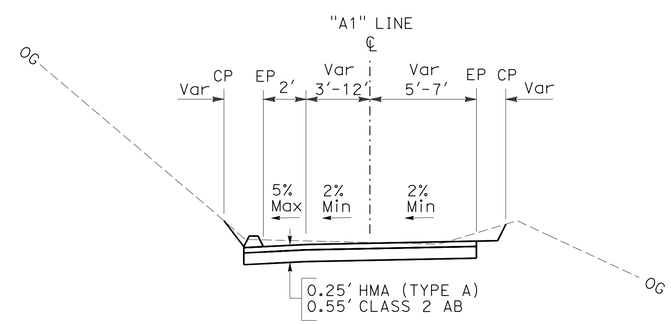

"A1" 100+68.00 TO 104+11.54

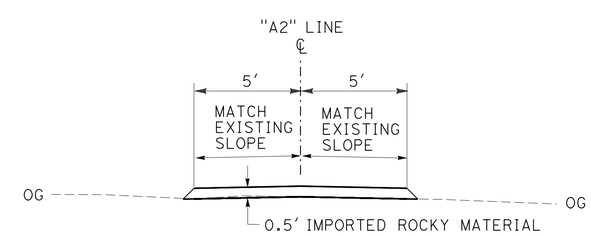

"A2" 200+09.00 TO 202+55.52

TYPICAL CROSS SECTIONS

NO SCALE

X-1

REVISED BY | DATE REVISED
JEN BUCK | KRISTINE PEPPER
CALCULATED-DESIGNED BY | CHECKED BY
FUNCTIONAL SUPERVISOR
TIM BOESE

STATE OF CALIFORNIA - DEPARTMENT OF TRANSPORTATION
Caltrans®
HYDRAULICS

P:\PROJ\01\0C370\drafting\sheets\0112000283ca001.dgn

LAST REVISION 00-00-00 | DATE PLOTTED => 21-JUN-2016 | TIME PLOTTED => 09:02

Dist	COUNTY	ROUTE	POST MILES TOTAL PROJECT	SHEET No.	TOTAL SHEETS
01	Men	101	R89.2	3	21

REGISTERED CIVIL ENGINEER — DATE 5-2-16

May 2, 2016
PLANS APPROVAL DATE

REGISTERED PROFESSIONAL ENGINEER — KRISTINE D. PEPPER No. 69113 Exp. 6-30-16 CIVIL — STATE OF CALIFORNIA

THE STATE OF CALIFORNIA OR ITS OFFICERS OR AGENTS SHALL NOT BE RESPONSIBLE FOR THE ACCURACY OR COMPLETENESS OF SCANNED COPIES OF THIS PLAN SHEET.

NOTES:

1. DOWNSTREAM FISHWAY WORK MUST BE COMPLETED BEFORE CULVERT WORK BEGINS.
2. FOR ACCURATE RIGHT OF WAY DATA, CONTACT RIGHT OF WAY ENGINEERING AT THE DISTRICT OFFICE.

LEGEND

- IMPORTED ROCKY MATERIAL
- RSP (LIGHT)
- REMOVE PAVEMENT (FINAL STAGE)
- TEMPORARY CONSTRUCTION EASEMENT
- PLACE HMA
- COLD PLANE AC PAVEMENT

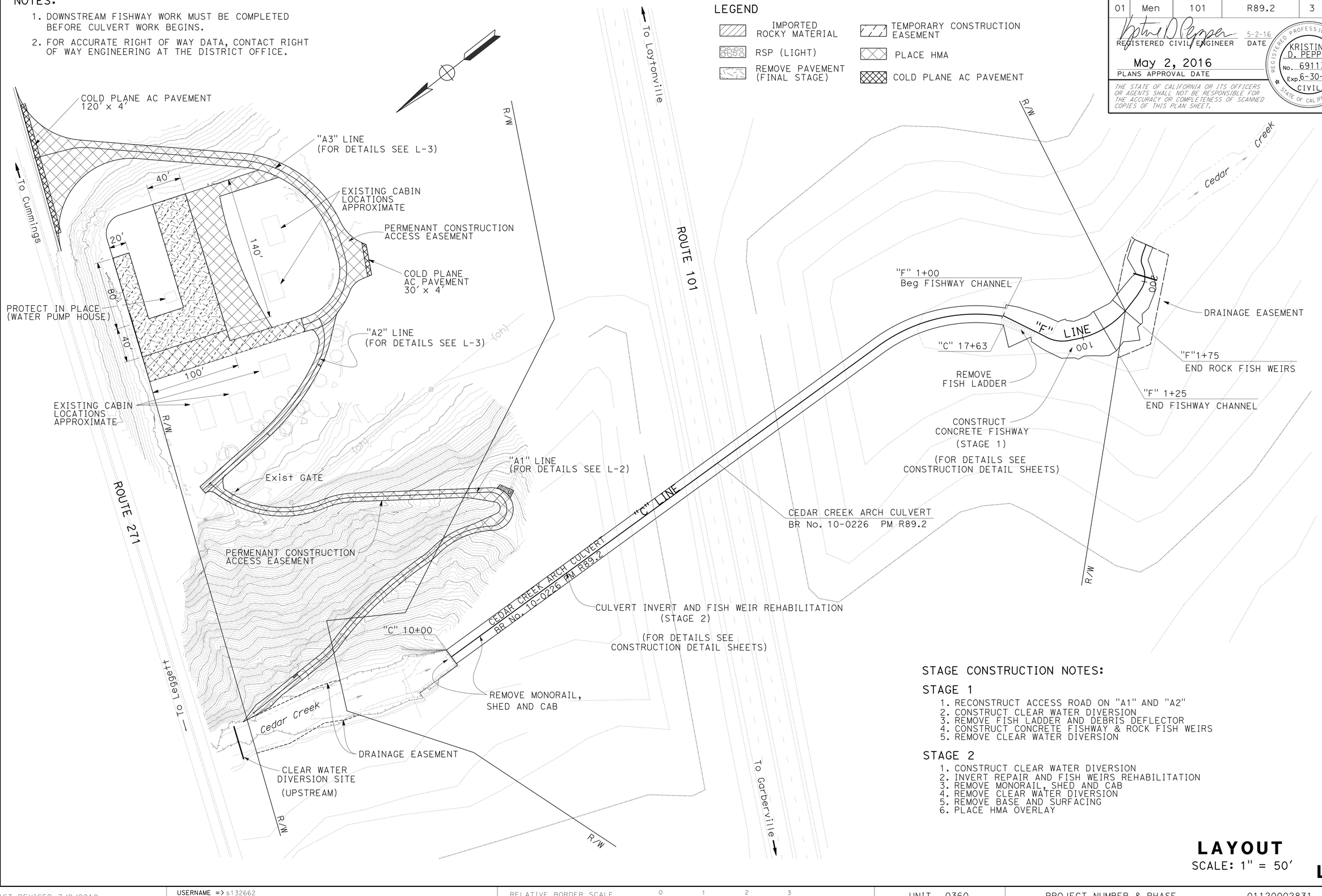

STAGE CONSTRUCTION NOTES:

STAGE 1

1. RECONSTRUCT ACCESS ROAD ON "A1" AND "A2"
2. CONSTRUCT CLEAR WATER DIVERSION
3. REMOVE FISH LADDER AND DEBRIS DEFLECTOR
4. CONSTRUCT CONCRETE FISHWAY & ROCK FISH WEIRS
5. REMOVE CLEAR WATER DIVERSION

STAGE 2

1. CONSTRUCT CLEAR WATER DIVERSION
2. INVERT REPAIR AND FISH WEIRS REHABILITATION
3. REMOVE MONORAIL, SHED AND CAB
4. REMOVE CLEAR WATER DIVERSION
5. REMOVE BASE AND SURFACING
6. PLACE HMA OVERLAY

LAYOUT

SCALE: 1" = 50'

L-1

REVISED BY	DATE REVISED
JEN BUCK	KRISTINE PEPPER

CALCULATED-DESIGNED BY — CHECKED BY

FUNCTIONAL SUPERVISOR: TIM BOESE

STATE OF CALIFORNIA - DEPARTMENT OF TRANSPORTATION — Caltrans — HYDRAULICS

P:\PROJ\01\0C370\drafting\sheets\01120002831ea001.dgn

LAST REVISION 00-00-00 — DATE PLOTTED => 21-JUN-2016 — TIME PLOTTED => 09:02

Dist	COUNTY	ROUTE	POST MILES TOTAL PROJECT	SHEET No.	TOTAL SHEETS
01	Men	101	R89.2	4	21

REGISTERED CIVIL ENGINEER — DATE 5-2-16

May 2, 2016
PLANS APPROVAL DATE

REGISTERED PROFESSIONAL ENGINEER — KRISTINE D. PEPPER No. 69113 Exp. 6-30-16 CIVIL — STATE OF CALIFORNIA

THE STATE OF CALIFORNIA OR ITS OFFICERS OR AGENTS SHALL NOT BE RESPONSIBLE FOR THE ACCURACY OR COMPLETENESS OF SCANNED COPIES OF THIS PLAN SHEET.

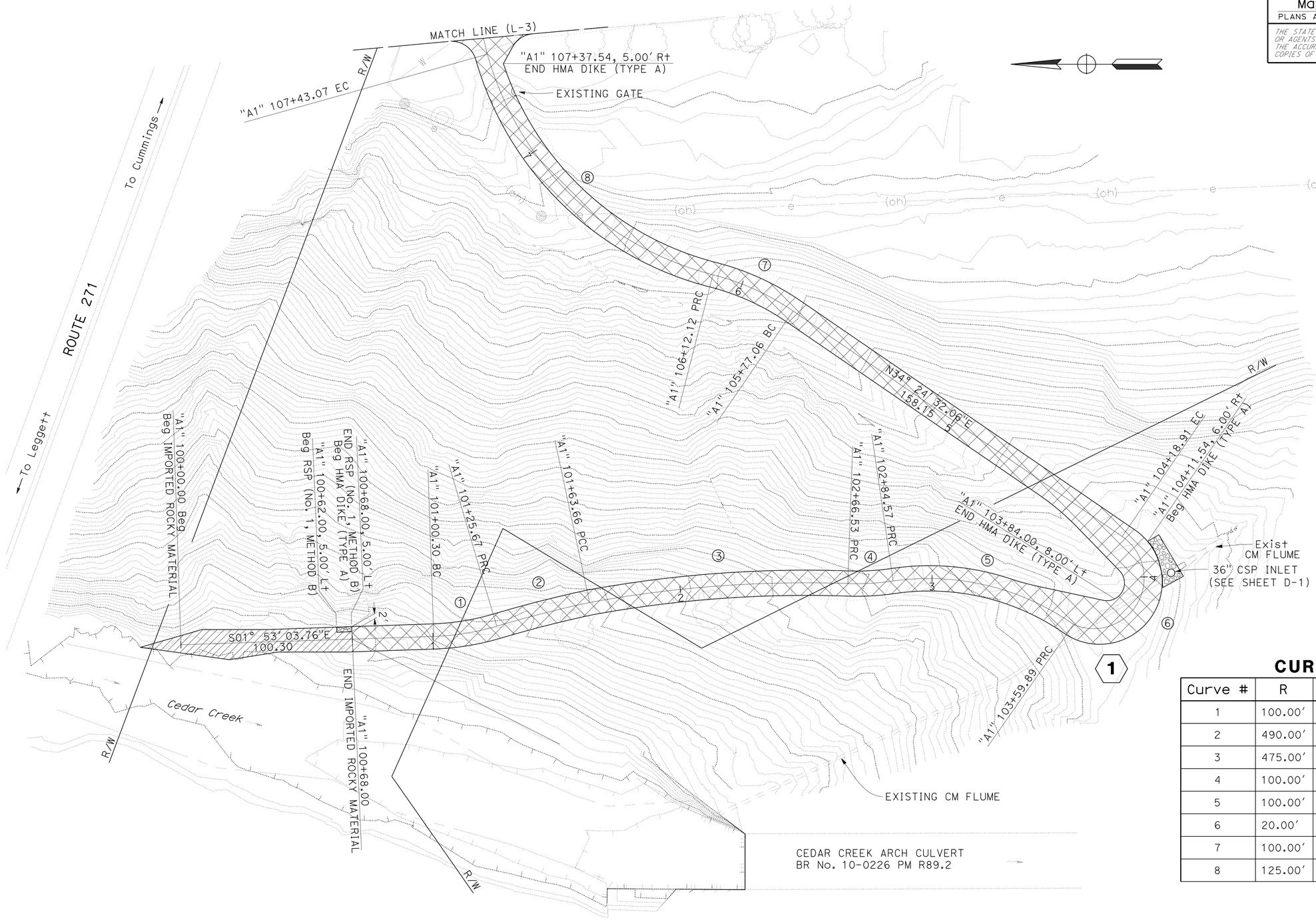

CURVE DATA

Curve #	R	Δ	T	L
1	100.00′	014°32′18"	12.76′	25.37′
2	490.00′	004°26′32"	19.01′	37.99′
3	475.00′	012°24′29"	51.64′	102.87′
4	100.00′	010°20′09"	9.04′	18.04′
5	100.00′	043°09′07"	39.54′	75.31′
6	20.00′	169°05′22"	209.42′	59.02′
7	100.00′	020°05′12"	17.71′	35.06′
8	125.00′	060°01′24"	72.20′	130.95′

LAYOUT

SCALE: 1" = 20′

L-2

REVISED BY	DATE REVISED

CALCULATED-DESIGNED BY: JEN BUCK
CHECKED BY: KRISTINE PEPPER
FUNCTIONAL SUPERVISOR: TIM BOESE

STATE OF CALIFORNIA - DEPARTMENT OF TRANSPORTATION
Caltrans® HYDRAULICS

P:\PROJ\01\0C370\drafting\sheets\01120002 83ea002.dgn

LAST REVISION 00-00-00 | DATE PLOTTED => 21-JUN-2016 | TIME PLOTTED => 09:20

Dist	COUNTY	ROUTE	POST MILES TOTAL PROJECT	SHEET No.	TOTAL SHEETS
01	Men	101	R89.2	5	21

REGISTERED CIVIL ENGINEER — DATE 5-2-16

May 2, 2016
PLANS APPROVAL DATE

REGISTERED PROFESSIONAL ENGINEER — KRISTINE D. PEPPER No. 69113 Exp. 6-30-16 CIVIL — STATE OF CALIFORNIA

THE STATE OF CALIFORNIA OR ITS OFFICERS OR AGENTS SHALL NOT BE RESPONSIBLE FOR THE ACCURACY OR COMPLETENESS OF SCANNED COPIES OF THIS PLAN SHEET.

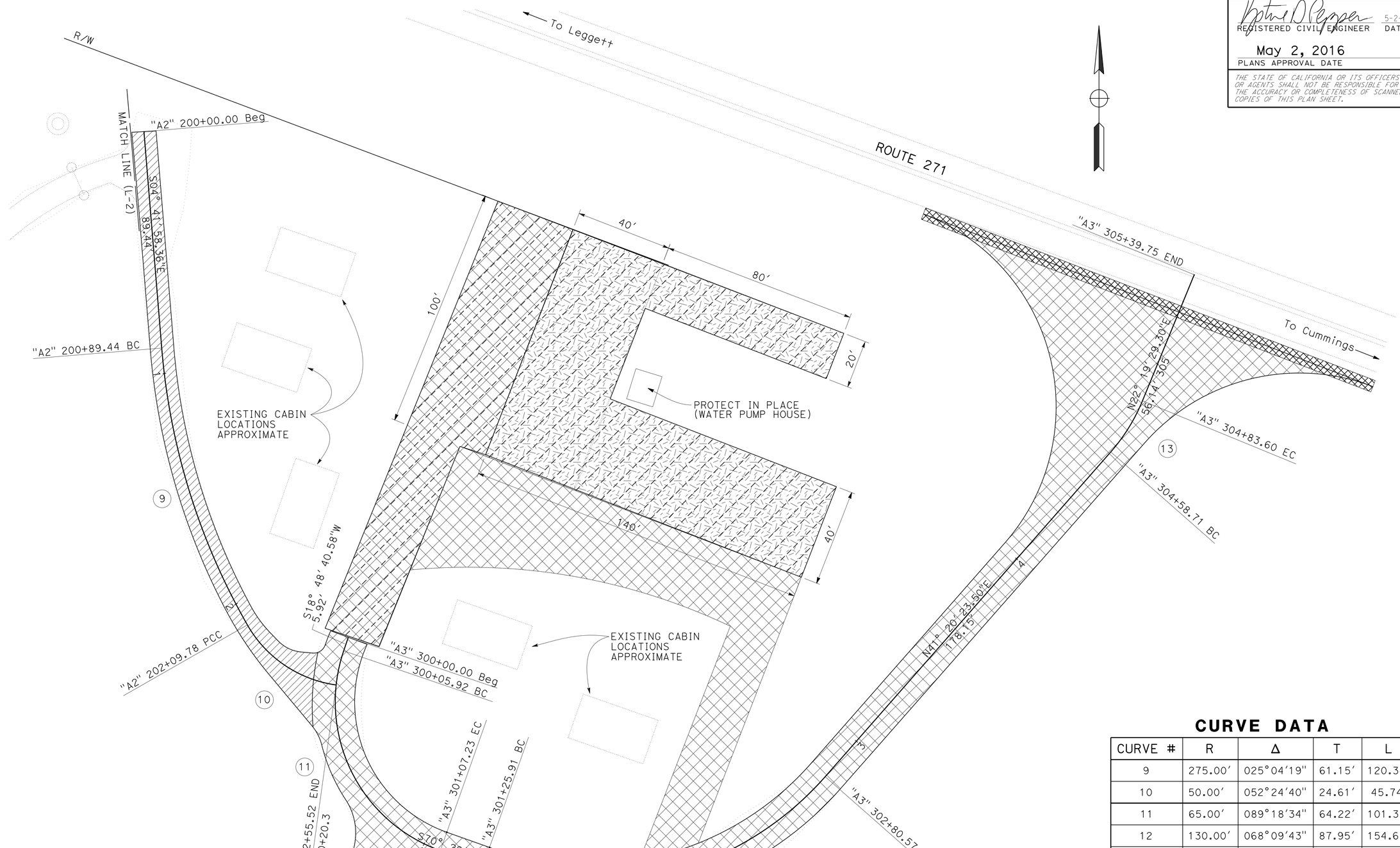

CURVE DATA

CURVE #	R	Δ	T	L
9	275.00′	025°04′19″	61.15′	120.34′
10	50.00′	052°24′40″	24.61′	45.74′
11	65.00′	089°18′34″	64.22′	101.32′
12	130.00′	068°09′43″	87.95′	154.65′
13	75.00′	019°00′54″	12.56′	24.89′

LAYOUT

SCALE: 1" = 20′

L-3

REVISED BY	DATE REVISED
JEN BUCK	KRISTINE PEPPER

CALCULATED-DESIGNED BY	CHECKED BY

FUNCTIONAL SUPERVISOR: TIM BOESE

STATE OF CALIFORNIA - DEPARTMENT OF TRANSPORTATION

Caltrans®

HYDRAULICS

P:\PROJ\01\0C370\drafting\sheets\0112000283ea003.dgn

LAST REVISION 00-00-00 | DATE PLOTTED => 21-JUN-2016 | TIME PLOTTED => 09:02

Dist	COUNTY	ROUTE	POST MILES TOTAL PROJECT	SHEET No.	TOTAL SHEETS
01	Men	101	R89.2	6	21

REGISTERED CIVIL ENGINEER — DATE 5-2-16

May 2, 2016
PLANS APPROVAL DATE

REGISTERED PROFESSIONAL ENGINEER — KRISTINE D. PEPPER No. 69113 Exp. 6-30-16 CIVIL — STATE OF CALIFORNIA

THE STATE OF CALIFORNIA OR ITS OFFICERS OR AGENTS SHALL NOT BE RESPONSIBLE FOR THE ACCURACY OR COMPLETENESS OF SCANNED COPIES OF THIS PLAN SHEET.

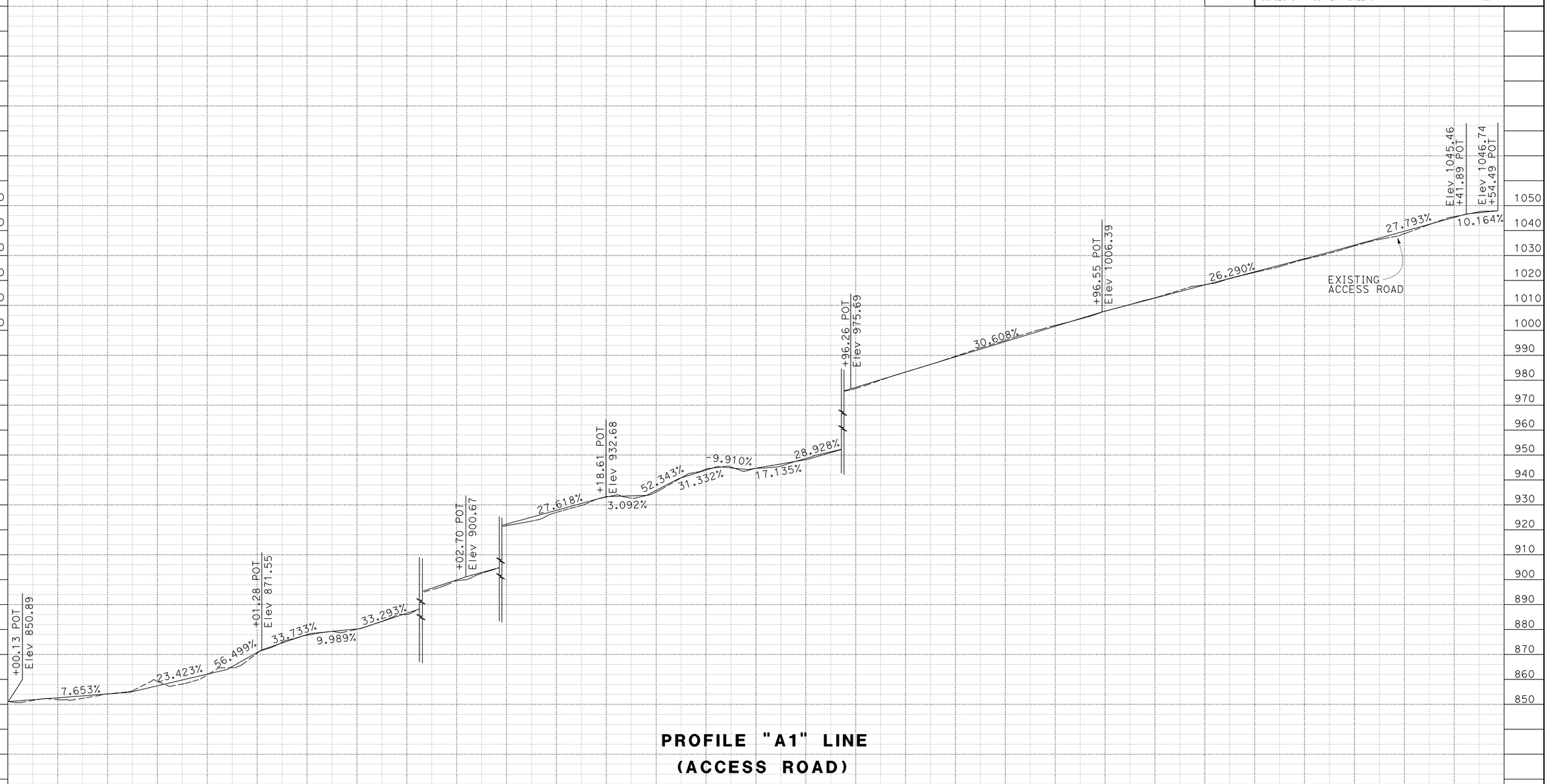

PROFILE "A1" LINE
(ACCESS ROAD)

SCALE: 1" = 20' Horiz
1" = 20' Vert

PROFILE
SCALE: 1" = 20'

P-1

STATION	101+00	102+00	103+00	104+00	105+00	106+00	107+00	TOTAL
CY Exc								
CY Emb								

STATE OF CALIFORNIA - DEPARTMENT OF TRANSPORTATION
Caltrans
HYDRAULICS

FUNCTIONAL SUPERVISOR: TIM BOESE
CALCULATED-DESIGNED BY: JEN BUCK
CHECKED BY: KRISTINE PEPPER
REVISED BY
DATE REVISED

P:\PROJ\01\0C370\drafting\sheets\01120002831fa001.dgn

LAST REVISION 00-00-00
DATE PLOTTED => 21-JUN-2016
TIME PLOTTED => 09:02

Dist	COUNTY	ROUTE	POST MILES TOTAL PROJECT	SHEET No.	TOTAL SHEETS
01	Men	101	R89.2	7	21

REGISTERED CIVIL ENGINEER — DATE 5-2-16

May 2, 2016
PLANS APPROVAL DATE

REGISTERED PROFESSIONAL ENGINEER — KRISTINE D. PEPPER No. 69113 Exp. 6-30-16 CIVIL — STATE OF CALIFORNIA

THE STATE OF CALIFORNIA OR ITS OFFICERS OR AGENTS SHALL NOT BE RESPONSIBLE FOR THE ACCURACY OR COMPLETENESS OF SCANNED COPIES OF THIS PLAN SHEET.

NOTES:

1. WHERE BEDROCK IS ENCOUNTERED IN EXCAVATION DRILL AND BOND DIRECTLY TO FISHWAY STRUCTURE.
2. EXPECT DIFFICULT EXCAVATION DUE TO THE PRESENCE OF THE FOLLOWING CONDITIONS:
   A. COHESIONLESS SOIL WITH COBBLES AND BOULDERS
   B. WEATHERED ROCK
   C. FRACTURED ROCK
   D. SOIL MATERIAL CONTAINING GRAVELS, COBBLES AND BOULDERS VARYING IN SIZE AND HARDNESS
3. ORIGINAL GROUND IS REPRESENTATIVE OF THE THALWEG SURVEYED

LEGEND

CONCRETE FISHWAY

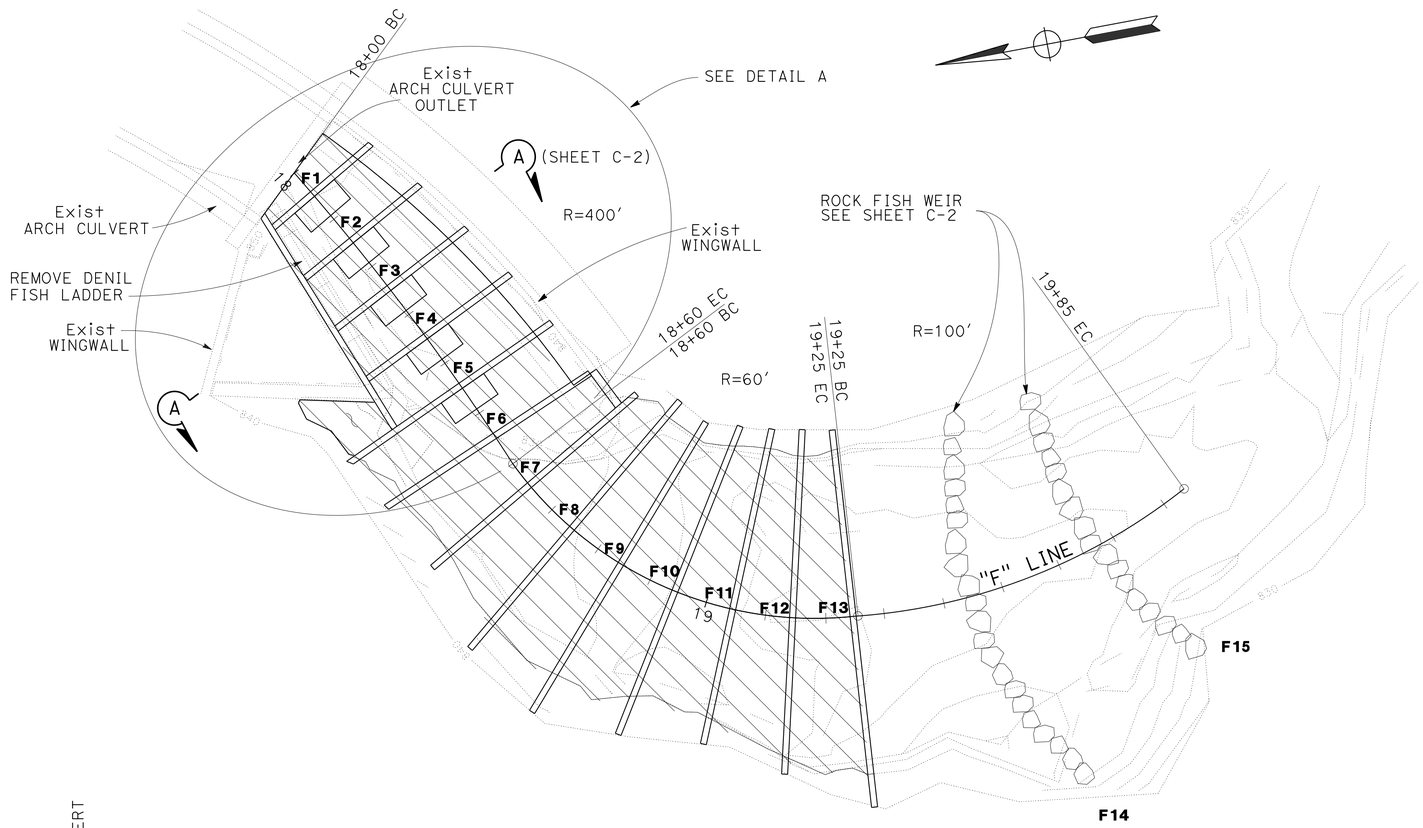

PLAN VIEW

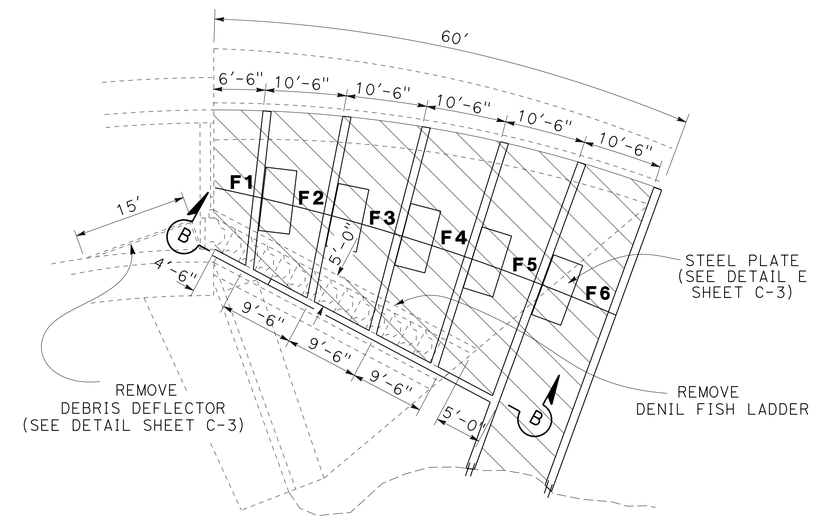

DETAIL A

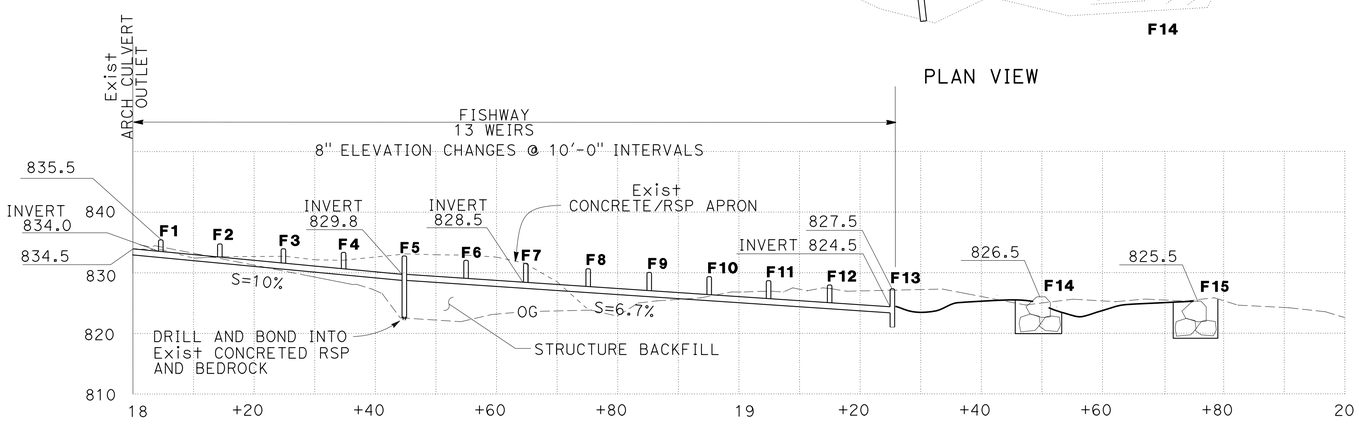

PROFILE

WEIR NUMBER	WEIR STATION	WEIR Elev	WEIR LENGTH
F1	18+05	835.50	20'
F2	18+15	834.83	22.5'
F3	18+25	834.17	25'
F4	18+35	833.50	27.5'
F5	18+45	832.83	40'
F6	18+55	832.17	45'
F7	18+65	831.50	50'
F8	18+75	830.83	70'
F9	18+85	830.16	70'
F10	18+95	829.50	60'
F11	19+05	828.83	60'
F12	19+15	828.17	60'
F13	19+25	827.50	70'
F14	19+50	826.50	73'
F15	19+75	825.50	54'

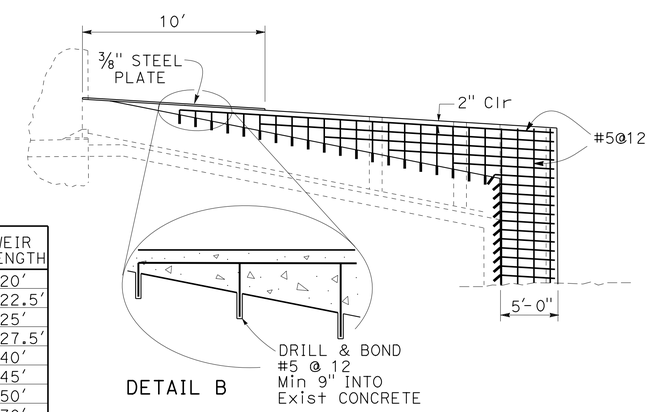

DETAIL B

SECTION B-B

DOWNSTREAM CHANNEL WEIRS

(STAGE 1)

CONSTRUCTION DETAILS

NO SCALE

C-1

REVISED BY | DATE REVISED
KRISTINE PEPPER | GLENN HURLBURT
CALCULATED-DESIGNED BY | CHECKED BY
FUNCTIONAL SUPERVISOR: TIM BOESE

STATE OF CALIFORNIA - DEPARTMENT OF TRANSPORTATION
Caltrans
HYDRAULICS

P:\PROJ\01\0C370\drafting\sheets\01120002831ga001.dgn

LAST REVISION 00-00-00 | DATE PLOTTED => 21-JUN-2016 | TIME PLOTTED => 09:02

Dist	COUNTY	ROUTE	POST MILES TOTAL PROJECT	SHEET No.	TOTAL SHEETS
01	Men	101	R89.2	8	21

REGISTERED CIVIL ENGINEER — DATE 5-2-16

May 2, 2016
PLANS APPROVAL DATE

REGISTERED PROFESSIONAL ENGINEER — KRISTINE D. PEPPER No. 69113 Exp. 6-30-16 CIVIL — STATE OF CALIFORNIA

THE STATE OF CALIFORNIA OR ITS OFFICERS OR AGENTS SHALL NOT BE RESPONSIBLE FOR THE ACCURACY OR COMPLETENESS OF SCANNED COPIES OF THIS PLAN SHEET.

NOTES:

1. ALL WELDS ON WEIRS MUST BE SMOOTH, FULL PENETRATION WELDS.

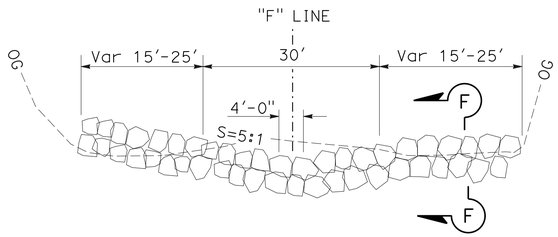

WEIRS F14-F15

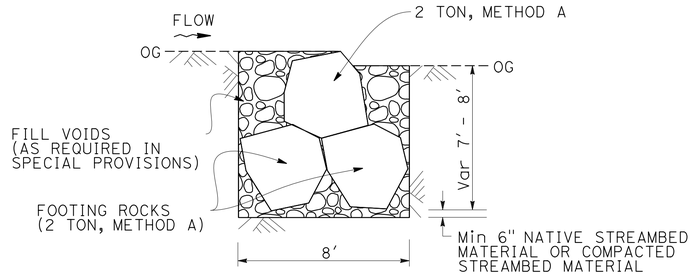

SECTION F-F

TYPICAL ROCK FISH WEIR

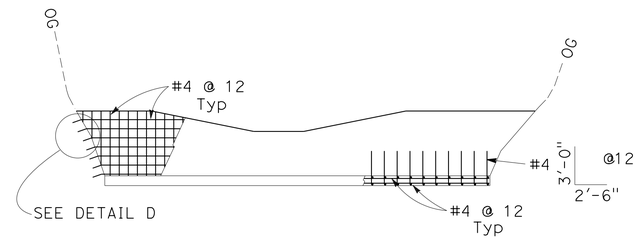

TYPICAL REBAR LAYOUT

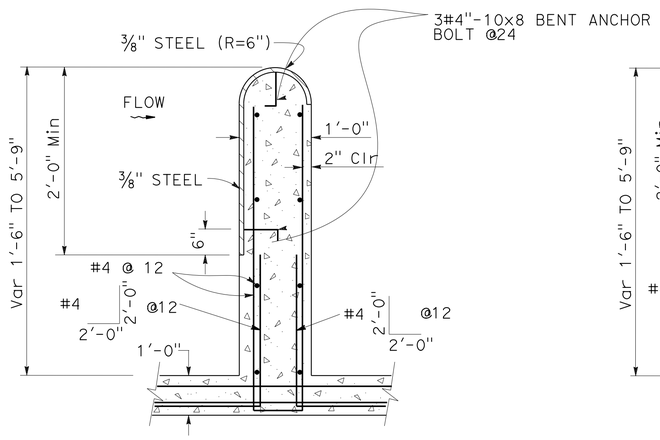

SECTION D-D
LAMPREY WEIR DETAIL

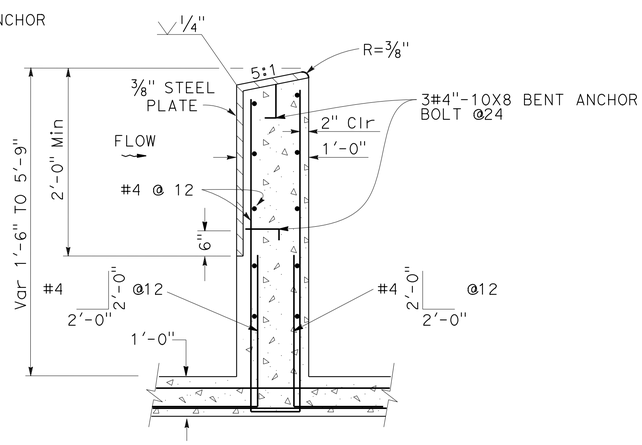

SECTION E-E
SALMONID WEIR DETAIL

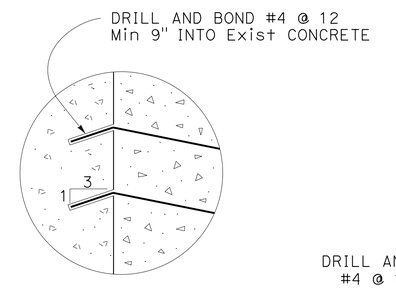

DETAIL C

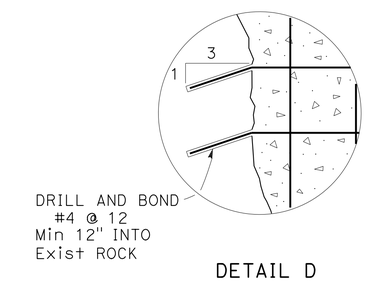

DETAIL D

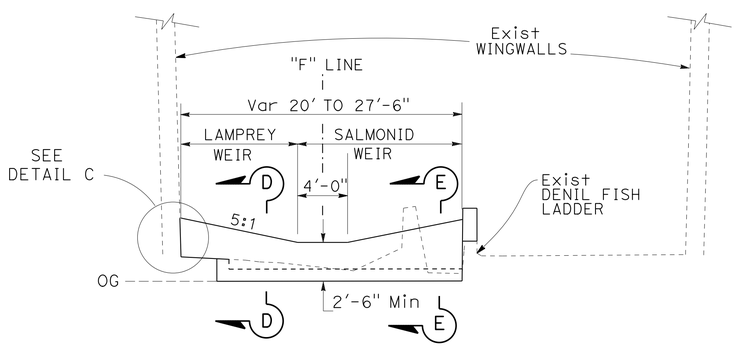

SECTION A-A (SHEET C-1)
WEIRS F1-F4

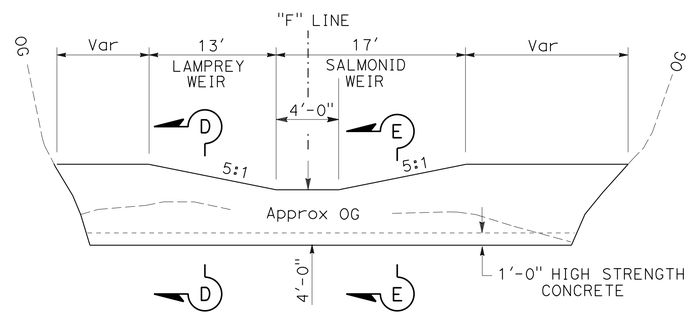

WEIRS F5-F12

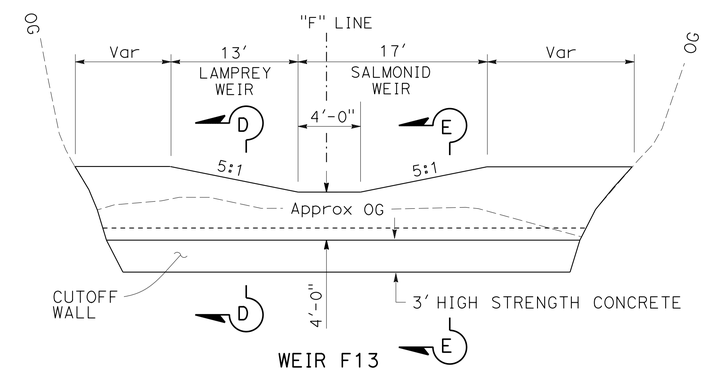

WEIR F13

FISHWAY CONCRETE WEIRS
TYPICAL SECTIONS

CONSTRUCTION DETAILS
NO SCALE

C-2

REVISED BY | DATE REVISED
KRISTINE PEPPER | GLENN HURLBURT
CALCULATED-DESIGNED BY | CHECKED BY
FUNCTIONAL SUPERVISOR
TIM BOESE

STATE OF CALIFORNIA - DEPARTMENT OF TRANSPORTATION
Caltrans
HYDRAULICS

P:\PROJ\01\0C370\drafting\sheets\01120002831ga002.dgn

LAST REVISION 00-00-00 | DATE PLOTTED => 21-JUN-2016 | TIME PLOTTED => 09:02

BORDER LAST REVISED 7/2/2010 | USERNAME => s132662 | DGN FILE => 01120002831ga002.dgn | RELATIVE BORDER SCALE IS IN INCHES 0 1 2 3 | UNIT 0360 | PROJECT NUMBER & PHASE 01120002831

Dist	COUNTY	ROUTE	POST MILES TOTAL PROJECT	SHEET No.	TOTAL SHEETS
01	Men	101	R89.2	9	21

REGISTERED CIVIL ENGINEER — DATE 5-2-16

May 2, 2016
PLANS APPROVAL DATE

REGISTERED PROFESSIONAL ENGINEER — KRISTINE D. PEPPER No. 69113 Exp. 6-30-16 CIVIL — STATE OF CALIFORNIA

THE STATE OF CALIFORNIA OR ITS OFFICERS OR AGENTS SHALL NOT BE RESPONSIBLE FOR THE ACCURACY OR COMPLETENESS OF SCANNED COPIES OF THIS PLAN SHEET.

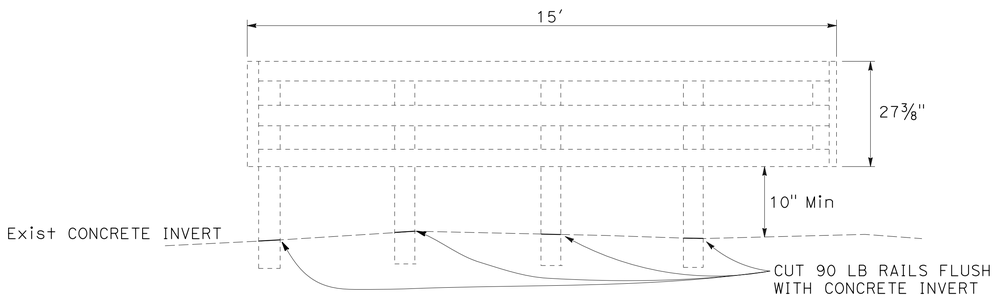

ELEVATION

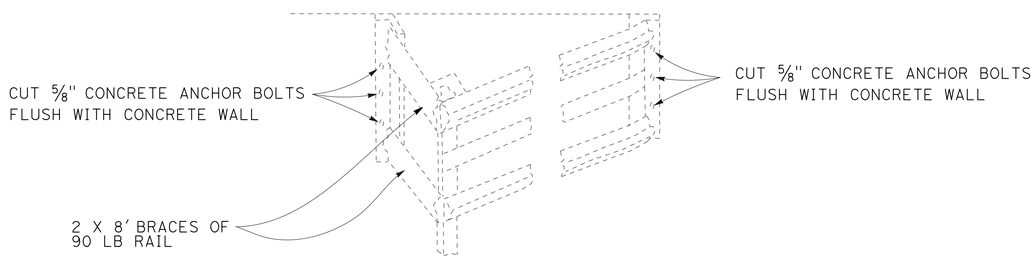

ANCHOR BRACES TO WALL

REMOVE DEBRIS DEFLECTOR

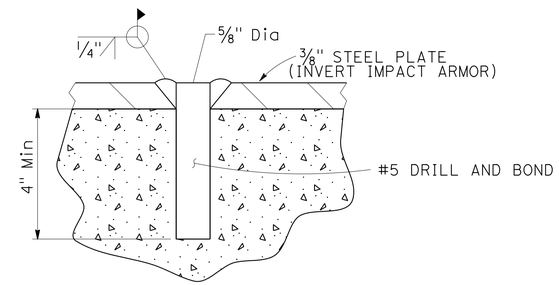

ELEVATION

DRILL AND BOND
ANCHORAGE DEVICE

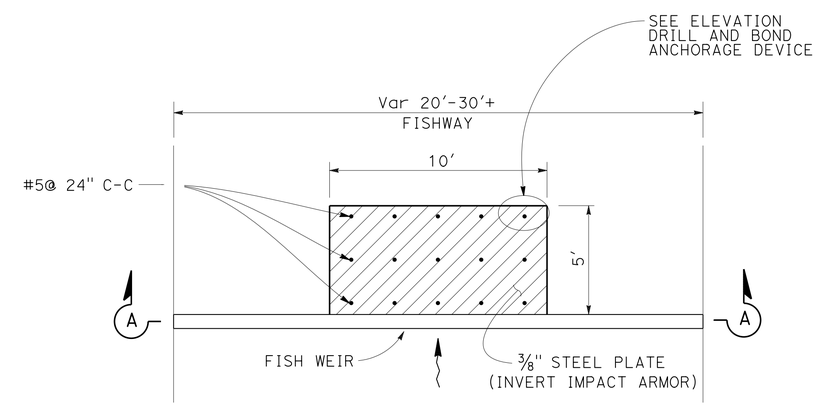

PLAN VIEW

DETAIL E
(WEIRS F1-F5)

STEEL PLATE

CONSTRUCTION DETAILS

NO SCALE

C-3

REVISED BY	DATE REVISED
KRISTINE PEPPER	GLENN HURLBURT

CALCULATED-DESIGNED BY / CHECKED BY

FUNCTIONAL SUPERVISOR: TIM BOESE

STATE OF CALIFORNIA - DEPARTMENT OF TRANSPORTATION
Caltrans® HYDRAULICS

P:\PROJ\01\0C370\drafting\sheets\01120002830a003.dgn

LAST REVISION 00-00-00 | DATE PLOTTED => 21-JUN-2016 | TIME PLOTTED => 09:03

Dist	COUNTY	ROUTE	POST MILES TOTAL PROJECT	SHEET No.	TOTAL SHEETS
01	Men	101	R89.2	10	21

REGISTERED CIVIL ENGINEER — DATE 5-2-16

May 2, 2016
PLANS APPROVAL DATE

REGISTERED PROFESSIONAL ENGINEER KRISTINE D. PEPPER No. 69113 Exp. 6-30-16 CIVIL STATE OF CALIFORNIA

THE STATE OF CALIFORNIA OR ITS OFFICERS OR AGENTS SHALL NOT BE RESPONSIBLE FOR THE ACCURACY OR COMPLETENESS OF SCANNED COPIES OF THIS PLAN SHEET.

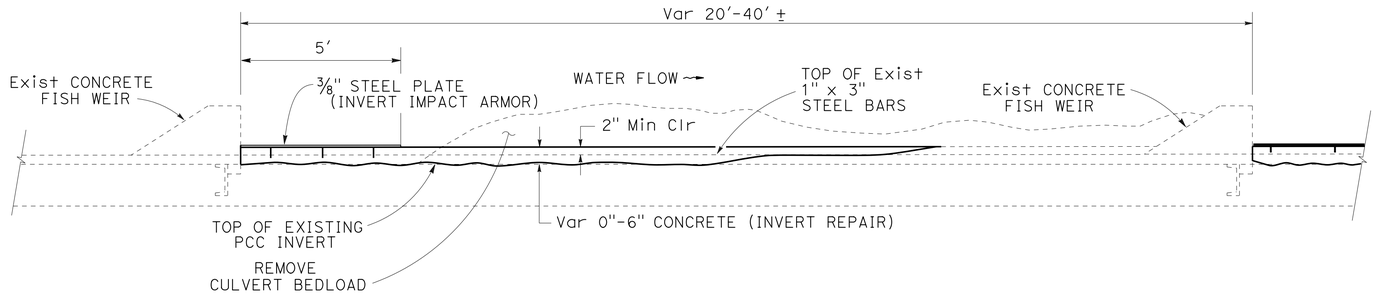

TYPICAL LONGITUDINAL SECTION

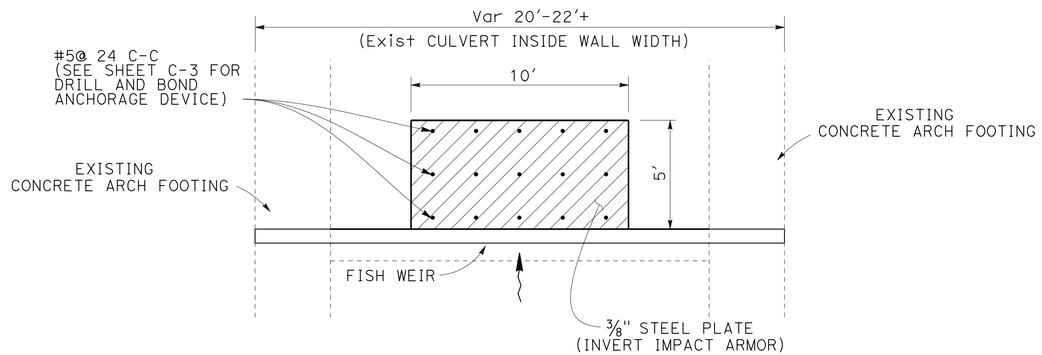

PLAN VIEW
(WEIRS C2-C23)

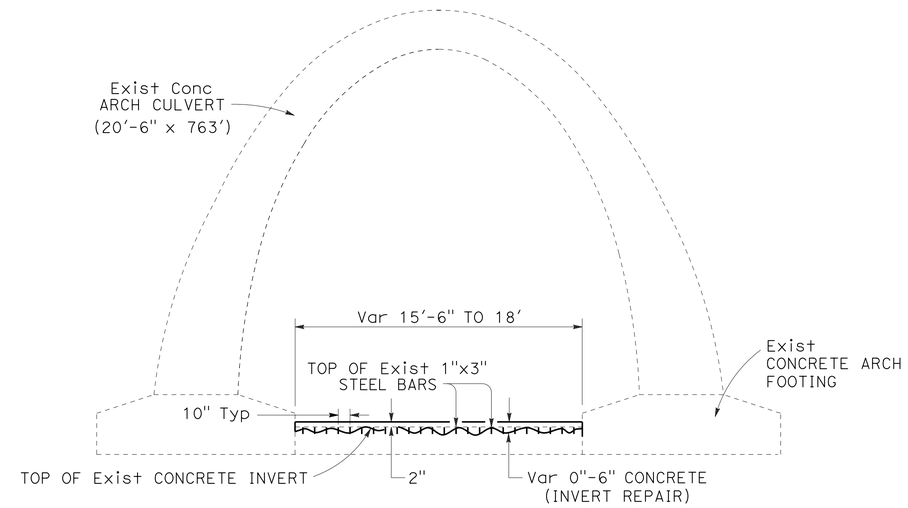

TYPICAL SECTION BETWEEN WEIRS

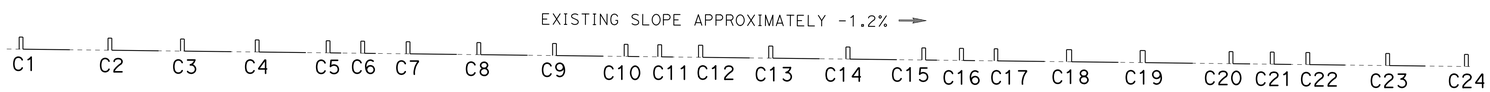

PROFILE

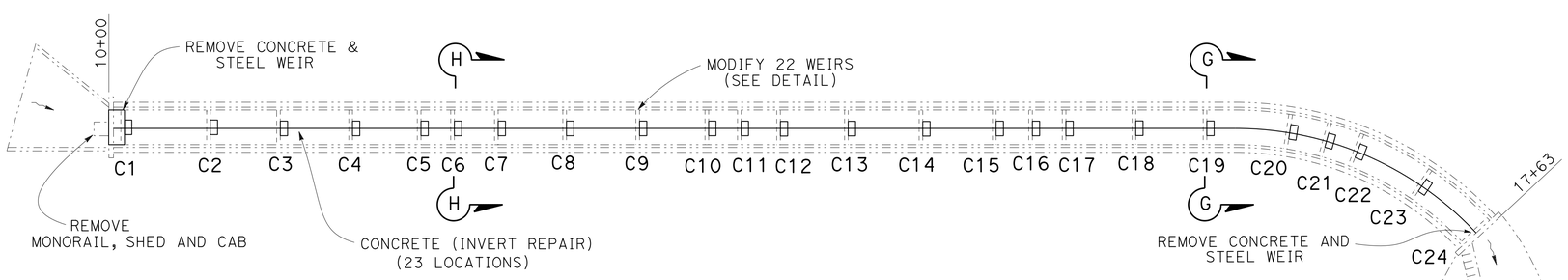

PLAN VIEW

REPAIR CONCRETE INVERT

CONSTRUCTION DETAILS

NO SCALE

C-4

REVISED BY | DATE REVISED
KRISTINE PEPPER | GLENN HURLBURT
CALCULATED-DESIGNED BY | CHECKED BY
FUNCTIONAL SUPERVISOR: TIM BOESE

STATE OF CALIFORNIA - DEPARTMENT OF TRANSPORTATION
Caltrans HYDRAULICS

P:\PROJ\01\0C370\drafting\sheets\01120002283ga004.dgn

LAST REVISION 00-00-00 | DATE PLOTTED => 21-JUN-2016 | TIME PLOTTED => 09:03

Dist	COUNTY	ROUTE	POST MILES TOTAL PROJECT	SHEET No.	TOTAL SHEETS
01	Men	101	R89.2	11	21

REGISTERED CIVIL ENGINEER — DATE 5-2-16

May 2, 2016
PLANS APPROVAL DATE

REGISTERED PROFESSIONAL ENGINEER KRISTINE D. PEPPER No. 69113 Exp. 6-30-16 CIVIL STATE OF CALIFORNIA

THE STATE OF CALIFORNIA OR ITS OFFICERS OR AGENTS SHALL NOT BE RESPONSIBLE FOR THE ACCURACY OR COMPLETENESS OF SCANNED COPIES OF THIS PLAN SHEET.

LEGEND

LIMITS OF INVERT REPAIR

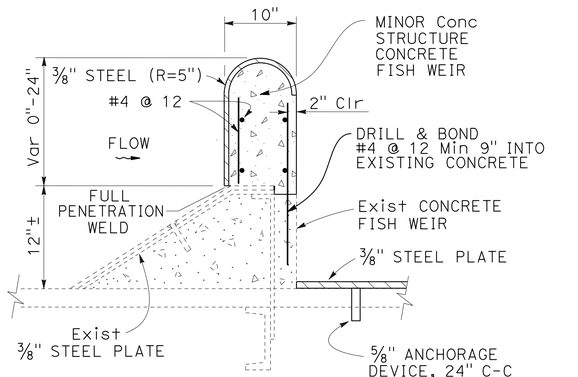

SECTION I-I

LAMPREY WEIR DETAIL

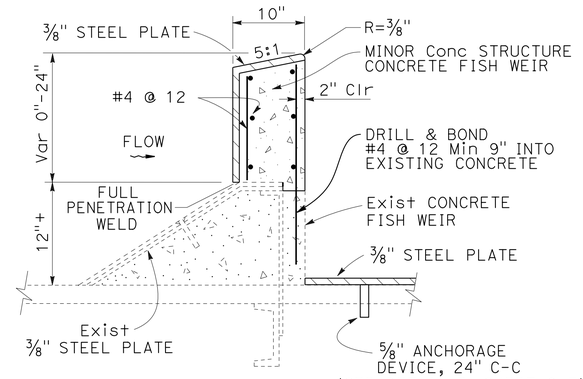

SECTION J-J

SALMONID WEIR DETAIL

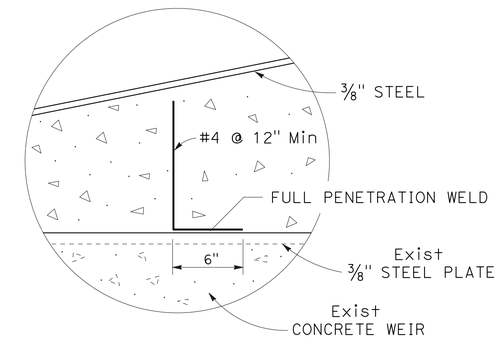

DETAIL F

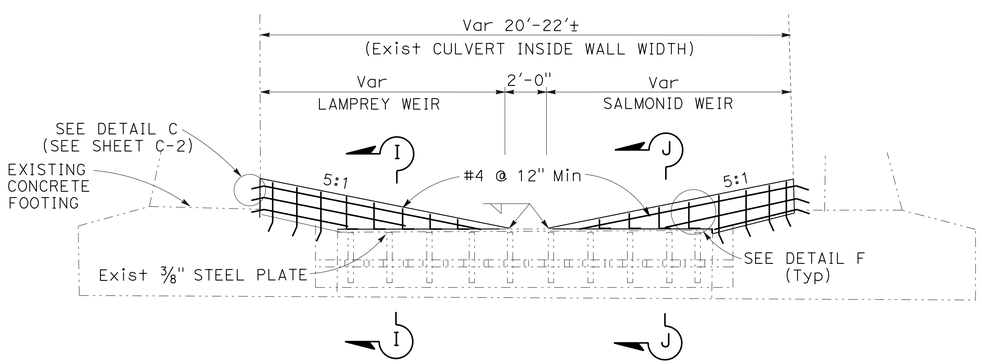

SECTION G-G

(WEIRS C2-C5, C7-C10, C12-C15, C17-C20, C22-C23)

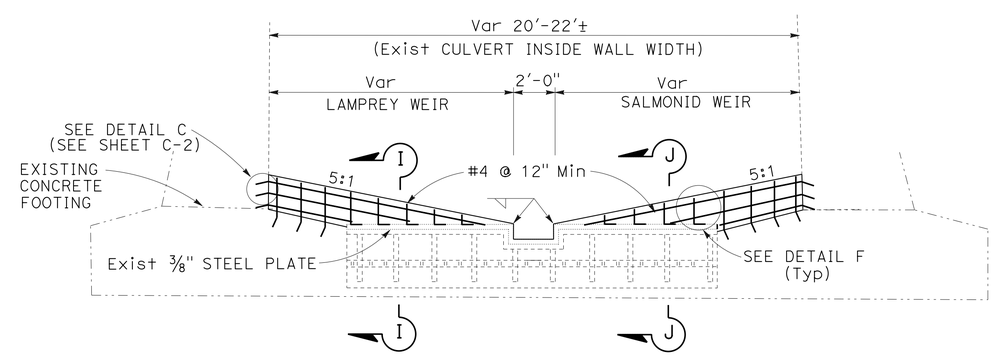

SECTION H-H

(WEIRS C6, C11, C16, C21)

CULVERT FISH WEIRS TYPICAL SECTIONS

CONSTRUCTION DETAILS

NO SCALE

C-5

REVISED BY | DATE REVISED
KRISTINE PEPPER | GLENN HURLBURT
CALCULATED-DESIGNED BY | CHECKED BY
FUNCTIONAL SUPERVISOR | TIM BOESE

STATE OF CALIFORNIA - DEPARTMENT OF TRANSPORTATION
Caltrans® HYDRAULICS

P:\PROJ\01\0C370\drafting\sheets\01120002 83ga005.dgn

LAST REVISION 00-00-00 | DATE PLOTTED => 21-JUN-2016 | TIME PLOTTED => 09:03

Dist	COUNTY	ROUTE	POST MILES TOTAL PROJECT	SHEET No.	TOTAL SHEETS
01	Men	101	R89.2	12	21

REGISTERED CIVIL ENGINEER — DATE 5-2-16

May 2, 2016
PLANS APPROVAL DATE

REGISTERED PROFESSIONAL ENGINEER — KRISTINE D. PEPPER No. 69113 Exp. 6-30-16 CIVIL — STATE OF CALIFORNIA

THE STATE OF CALIFORNIA OR ITS OFFICERS OR AGENTS SHALL NOT BE RESPONSIBLE FOR THE ACCURACY OR COMPLETENESS OF SCANNED COPIES OF THIS PLAN SHEET.

NOTE:
1. RIGHT OF WAY AS SHOWN ON LAYOUT (SHEET L1, NOTE 2)

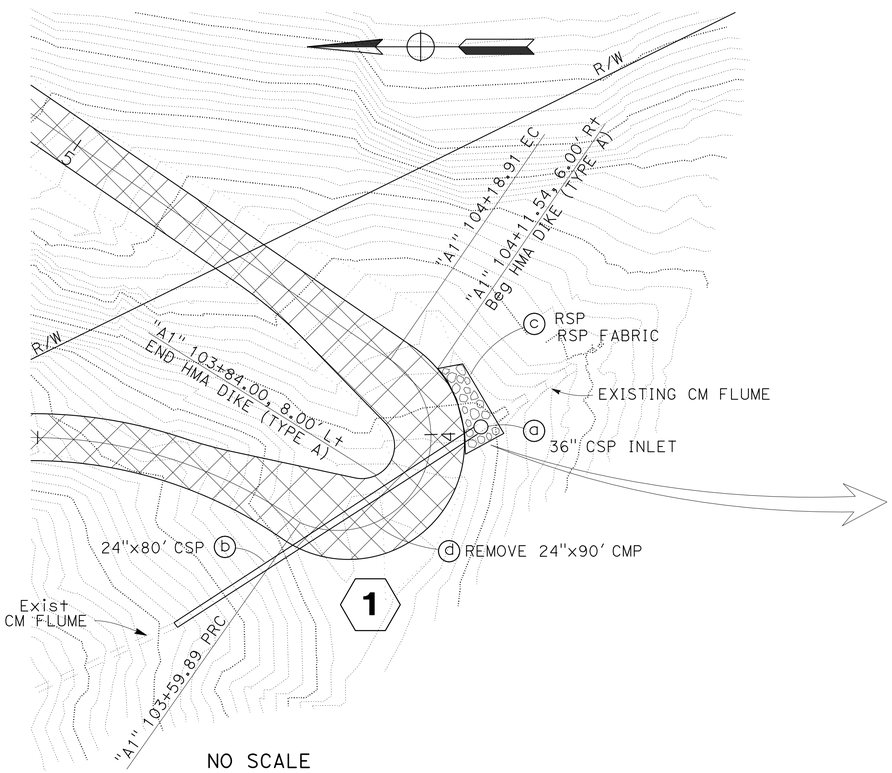

NO SCALE

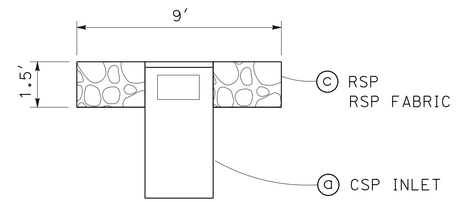

SECTION A-A
NO SCALE

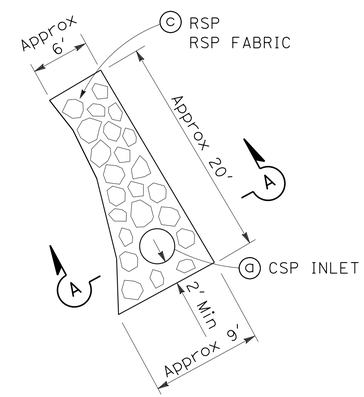

RSP DETAIL
NO SCALE

DRAINAGE QUANTITIES

SYSTEM NUMBER ⬡	DRAINAGE UNIT ○	REMOVE CULVERT (EA) EA	24" CSP (0.109" THICK) LF	RSP (No. 1, METHOD B) CY	RSP FABRIC (CLASS 8) SQYD	36" CSP INLET (0.109" THICK) LF	Misc IRON AND STEEL LB	REMARKS
1	a					6	236	OMPI DI, H=6', 36R GRATE
	b		80					
	c			5.7	26			ROCK ENERGY DISSIPATOR
	d	1						24"x80' CMP
TOTAL		1	80	5.7	26	6	236*	

* TOTAL INCLUDED IN SUMMARY OF QUANTITIES TABLE

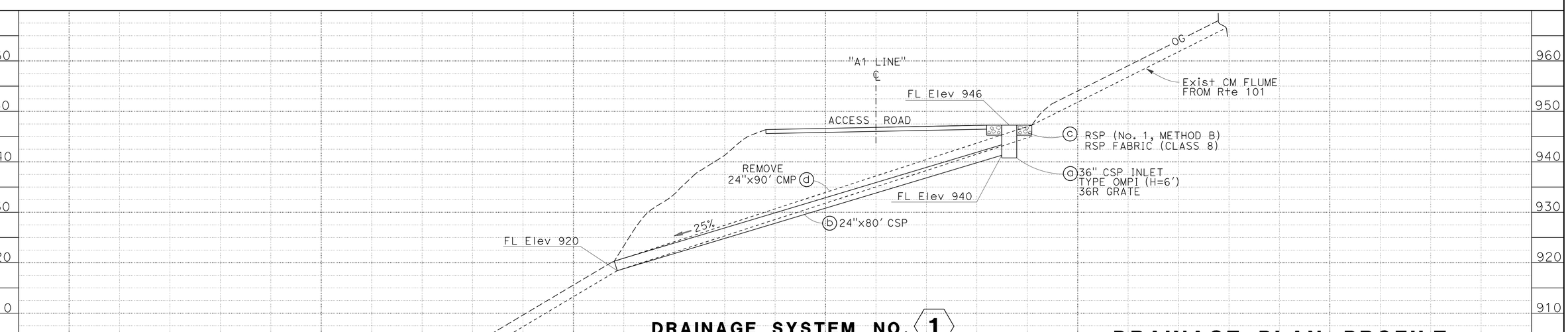

DRAINAGE SYSTEM NO. 1

ACCESS ROAD "A1" 103+80

SCALE: 1" = 5' Horiz
1" = 5' Vert

DRAINAGE PLAN, PROFILE, DETAILS AND QUANTITIES

D-1

REVISED BY | DATE REVISED
KRISTINE PEPPER | GLENN HURLBURT
CALCULATED-DESIGNED BY | CHECKED BY
FUNCTIONAL SUPERVISOR: TIM BOESE

STATE OF CALIFORNIA - DEPARTMENT OF TRANSPORTATION
Caltrans
HYDRAULICS

P:\PROJ\01\0C370\drafting\sheets\01120002831a001.dgn

LAST REVISION 00-00-00 | DATE PLOTTED => 21-JUN-2016 | TIME PLOTTED => 09:03

BORDER LAST REVISED 7/2/2010 | USERNAME => s132662 | DGN FILE => 01120002831a001.dgn | RELATIVE BORDER SCALE IS IN INCHES 0 1 2 3 | UNIT 0360 | PROJECT NUMBER & PHASE 01120002831

Dist	COUNTY	ROUTE	POST MILES TOTAL PROJECT	SHEET No.	TOTAL SHEETS
01	Men	101	R89.2	13	21

REGISTERED CIVIL ENGINEER — DATE 11-13-15

May 2, 2016
PLANS APPROVAL DATE

REGISTERED PROFESSIONAL ENGINEER SHERI M. RODRIGUEZ No. C66861 Exp. 9-30-16 CIVIL STATE OF CALIFORNIA

THE STATE OF CALIFORNIA OR ITS OFFICERS OR AGENTS SHALL NOT BE RESPONSIBLE FOR THE ACCURACY OR COMPLETENESS OF SCANNED COPIES OF THIS PLAN SHEET.

NOTES:

1. CALIFORNIA CODES ARE DESIGNATED BY (CA). OTHERWISE, FEDERAL (MUTCD) CODES ARE SHOWN.
2. ALL SIGNS SHALL HAVE A BLACK LEGEND ON FLUORESCENT ORANGE BACKGROUND AND SHALL BE EQUIPPED WITH AT LEAST TWO 16" x 16" ORANGE FLAGS FOR DAYTIME CLOSURE OR FLASHING BEACONS FOR LANE CLOSURE DURING HOURS OF DARKNESS.
3. ALL CONES USED FOR LANE CLOSURES DURING THE HOURS OF DARKNESS SHALL BE FITTED WITH RETROREFLECTIVE BANDS OR SLEEVES.
4. WHEN A PILOT CAR IS USED, PLACE A C37 (CA) SIGN AT ALL INTERSECTIONS WITHIN TRAFFIC CONTROL AREA. WHERE VEHICULAR TRAFFIC CAN NOT EFFECTIVELY SELF-REGULATE, AT LEAST ONE FLAGGER SHALL BE USED AT EACH INTERSECTION WITHIN THE TRAFFIC CONTROL AREA.
5. FLAGGER SHOULD STAND IN A CONSPICUOUS PLACE, FACING TRAFFIC AT ALL TIMES, BE VISIBLE TO APPROACHING TRAFFIC AS WELL AS APPROACHING VEHICLES AFTER THE FIRST VEHICLE HAS STOPPED.
6. ADDITIONAL ADVANCE FLAGGERS ARE REQUIRED DURING HOURS OF DAYLIGHT. A FULL MATRIX PCMS IN PLACE OF EACH ADVANCE FLAGGER REQUIRED DURING HOURS OF DARKNESS.
7. WHEN FLAGGER IS NOT VISIBLE FROM THIS LOCATION PLACE A C29 (CA) SIGN BELOW THE C9A (CA) SIGN.

LEGEND

- TRAFFIC CONE
- TEMPORARY SIGN
- DIRECTION OF TRAVEL
- PORTABLE FLASHING BEACON
- FLAGGER

SIGN PANEL SIZE (MINIMUM)

A	48" x 48" - SPEED OF 45 mph OR MORE 36" x 36" - SPEED LESS THAN 45 mph
B	30" x 30"
C	UNUSED
D	UNUSED
E	20" x 7"

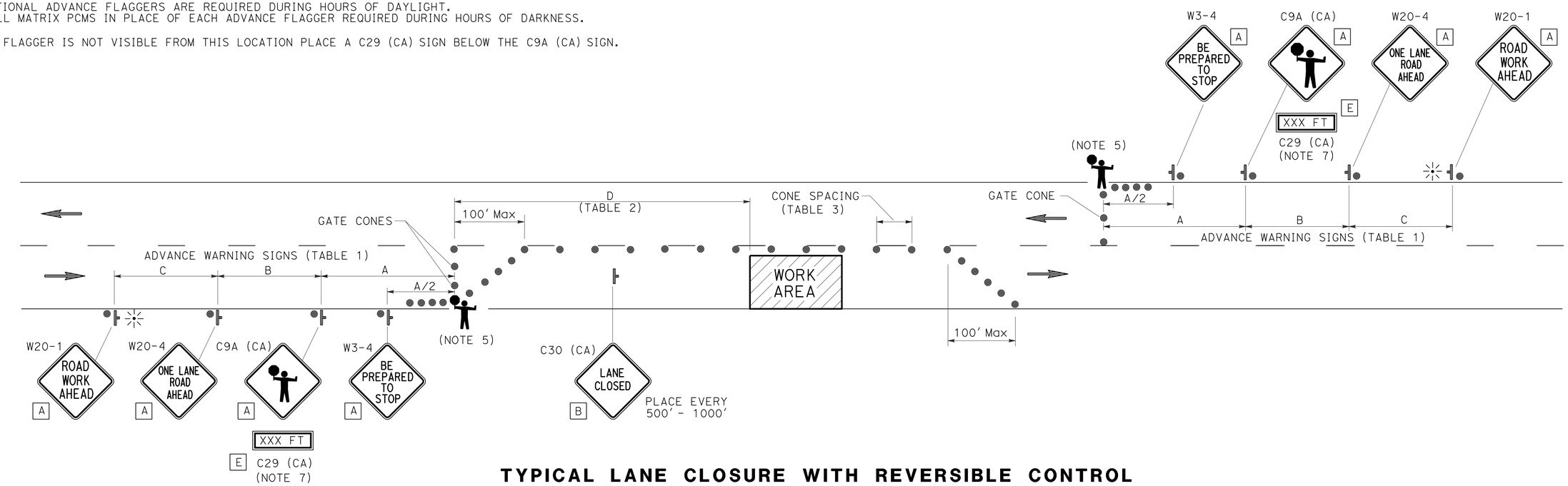

TYPICAL LANE CLOSURE WITH REVERSIBLE CONTROL

TABLE 1

ADVANCE WARNING SIGN SPACING

ROAD TYPE	Min A	Min B	Min C
	ft		
URBAN (25 mph OR LESS)	100	100	100
URBAN (30 mph TO 40 mph)	250	250	250
URBAN (MORE THAN 40 mph)	350	350	350
RURAL	500	500	500
EXPRESSWAY / FREEWAY	1000	1500	2640

TABLE 2

BUFFER SPACE

APPROACH SPEED	Min D	DOWNGRADE Min D		
		-3%*	-6%*	-9%*
mph	ft			
25 & BELOW	155	158	165	173
30	200	205	215	227
35	250	257	271	287
40	305	315	333	354
45	360	378	400	427
50	425	446	474	507
55	495	520	553	593
60	570	598	638	686
65	645	682	728	785

* USE ON SUSTAINED DOWNGRADE STEEPER THAN -3 PERCENT AND LONGER THAN 1 MILE.

TABLE 3

Max CONE SPACING

POSTED SPEED	TAPER	TANGENT	CONFLICT*
mph	ft		
20	20	40	10
25	25	50	12
30	30	60	15
35	35	70	17
40	40	80	20
45	45	90	22
50	50	100	25
55	55	110	27
60	60	120	30
65	65	130	32

* USE WHERE THERE IS A CONFLICT BETWEEN EXISTING PAVEMENT MARKINGS AND CHANNELIZERS.

TRAFFIC HANDLING PLAN

NO SCALE

APPROVED FOR TRAFFIC HANDLING WORK ONLY

TH-1

REVISED BY | DATE REVISED
SHERI M. RODRIGUEZ | TROY A. ARSENEAU
CALCULATED-DESIGNED BY | CHECKED BY
FUNCTIONAL SUPERVISOR: RICHARD MULLEN

STATE OF CALIFORNIA - DEPARTMENT OF TRANSPORTATION
Caltrans® TRAFFIC OPERATIONS

P:\PROJ\01\0C370\drafting\sheets\0112000283md001.dgn

LAST REVISION 00-00-00 | DATE PLOTTED => 21-JUN-2016 | TIME PLOTTED => 09:03

Dist	COUNTY	ROUTE	POST MILES TOTAL PROJECT	SHEET No.	TOTAL SHEETS
01	Men	101	R89.2	14	21

REGISTERED CIVIL ENGINEER 5-2-16 DATE

May 2, 2016
PLANS APPROVAL DATE

REGISTERED PROFESSIONAL ENGINEER KRISTINE D. PEPPER No. 69113 Exp. 6-30-16 CIVIL STATE OF CALIFORNIA

THE STATE OF CALIFORNIA OR ITS OFFICERS OR AGENTS SHALL NOT BE RESPONSIBLE FOR THE ACCURACY OR COMPLETENESS OF SCANNED COPIES OF THIS PLAN SHEET.

ROCK FISH WEIR

WEIR No.	WEIR DIMENSIONS (LF) (N) LENGTH L†	LENGTH R†	BASE WIDTH L†	BASE WIDTH R†	HEIGHT	ROCK SLOPE PROTECTION (N) (2T, METHOD A)	(1T, METHOD A)	(1/4T, METHOD A)	(LIGHT, METHOD A)	COARSE AGGREGATE (N)	ROCK FISH WEIR
						CY					
F14	33	40	8	8	8	57	47	38	19	29	190
F15	30	24	8	8	8	38	32	25	13	19	127
TOTAL						95	79	63	32	48	317

TEMPORARY BMP

LOCATION PM	TEMPORARY FIBER ROLL	TEMPORARY SILT FENCE	TEMPORARY CHECK DAM	TEMPORARY COVER
	LF	LF	LF	SQYD
R89.2	200	600	200	20

LOCATION STATION		REMOVE CONCRETE (MISCELLANEOUS) (CY)	CONCRETE (INVERT REPAIR) (CY)	MINOR CONCRETE (MINOR STRUCTURE) (CY)	BAR REINFORCING STEEL (N) (LB)	DRILL & BOND DOWELS (N) (LF)	MISCELLANEOUS IRON AND STEEL (LB)	COLD PLANE AC PAVEMENT (SQYD)	ROADWAY EXCAVATION (CY)	IMPORTED ROCKY MATERIAL (CY)	CLASS 2 AGGREGATE BASE (CY) (CY)	REMOVE BASE AND SURFACING (CY)	RSP FABRIC (CLASS 8) (SQYD)	ROCK SLOPE PROTECTION (No. 1, METHOD B) (CY) (CY)	HOT MIX ASPHALT (TYPE A) (TON)	PLACE HMA DIKE (TYPE A) (LF)	DESCRIPTION
"A1" 100+00	"A1" 100+68									13.3							ROCK ENERGY DISSIPATOR
"A1" 100+62	"A1" 100+68												2	0.7			ROCK ENERGY DISSIPATOR
"A1" 100+68	"A1" 107+50								200		150				155	642	ACCESS ROAD
"A1" 103+60	"A1" 104+00						236										FROM DRAINAGE
"A1" 103+97	"A1" 104+12												26	5.7			FROM DRAINAGE
"A2" 200+00	"A2" 202+48									47.3							CONSTRUCT ACCESS ROAD
"A3" 300+00	"A3" 305+23														292		POST CONSTRUCTION PAVING
"A3" 300+00	"A3" 305+26											180					POST CONSTRUCTION
"A3" 300+74	"A3" 301+14							13									PAVING TAPER (POST CONSTRUCTION)
"A3" 305+21	"A3" 305+26							53									PAVING TAPER (POST CONSTRUCTION)
"C" 10+00	"C" 17+63						16,830										⅜" STEEL PLATE-INVERT ARMOR
"C" 10+00	"C" 17+63						13,127										⅜" STEEL PLATE-WEIR ARMOR
"C" 10+00	"C" 17+63	4															REMOVE WEIR C1 AND C24
"C" 10+00	"C" 17+63		150														REPAIR INVERT THROUGHOUT CULVERT
"C" 10+00	"C" 17+63			20.4	3,210	264											CULVERT WEIRS
"F" 18+00	"F" 18+40	7			25,835	1640											REMOVE DENIL FISH LADDER
"F" 18+00	"F" 18+45						3,825										⅜" STEEL PLATE-INVERT ARMOR
"F" 18+00	"F" 19+25			276													CONCRETE FISHWAY
"F" 18+00	"F" 19+25						19,912										⅜" STEEL PLATE-WEIR ARMOR
TOTALS		11	150	296.4	29,045	1904	53,930	66	200	60.6	150	180	28	6.4	347	642	

(N) NOT A SEPARATE PAY ITEM, FOR INFORMATION ONLY.

SUMMARY OF QUANTITIES

Q-1

REVISED BY | DATE REVISED
KRISTINE PEPPER | GLENN HURLBURT
CALCULATED-DESIGNED BY | CHECKED BY
FUNCTIONAL SUPERVISOR: TIM BOESE

STATE OF CALIFORNIA - DEPARTMENT OF TRANSPORTATION
Caltrans® HYDRAULICS

P:\PROJ\01\0C370\drafting\sheets\0112000283pa001.dgn

LAST REVISION 00-00-00 | DATE PLOTTED => 06-JUL-2016 | TIME PLOTTED => 09:54

Dist	COUNTY	ROUTE	POST MILES TOTAL PROJECT	SHEET No.	TOTAL SHEETS
01	Men	101	R89.2	15	21

Laura Lazzarotto
LICENSED LANDSCAPE ARCHITECT

May 2, 2016
PLANS APPROVAL DATE

LICENSED LANDSCAPE ARCHITECT
Laura Lazzarotto
Signature
8-31-17
Renewal Date
5-2-16
Date
STATE OF CALIFORNIA

THE STATE OF CALIFORNIA OR ITS OFFICERS OR AGENTS SHALL NOT BE RESPONSIBLE FOR THE ACCURACY OR COMPLETENESS OF SCANNED COPIES OF THIS PLAN SHEET.

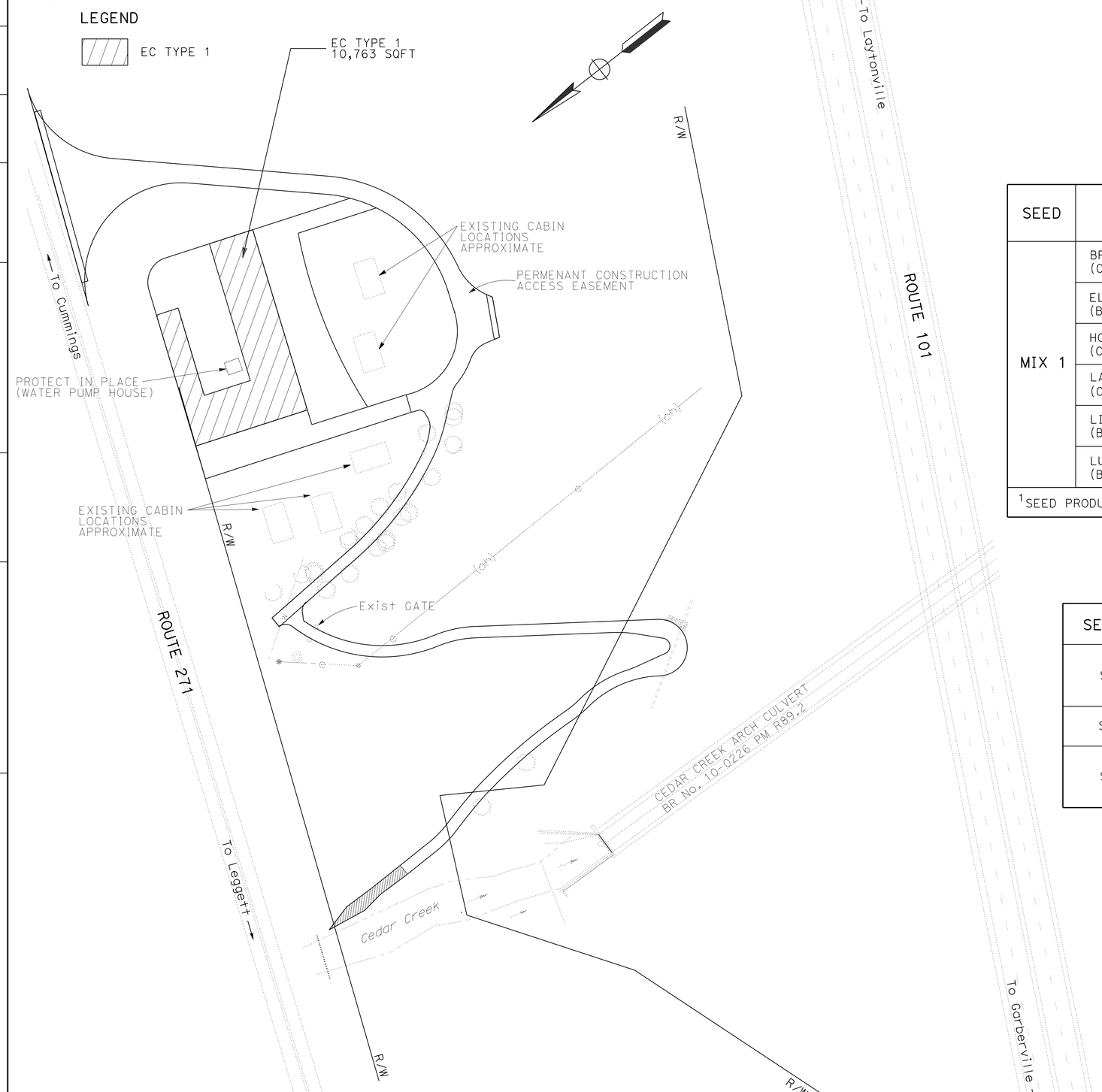

SEED MIX 1

SEED	BOTANICAL NAME (COMMON NAME)	PERCENT GERMINATION (MINIMUM)	POUNDS PURE LIVE SEED PER ACRE (SLOPE MEASUREMENT)
MIX 1	BROMUS CARINATUS[1] (CALIFORNIA BROME)	70	20
	ELYMUS GLAUCUS 'BERKELEY'[1] (BERKELEY BLUE WILDRYE)	50	30
	HORDEUM CALIFORNICUM[1] (CALIFORNIA BARLEY)	50	25
	LASTHENIA CALIFORNICA[1] (CALIFORNIA GOLDFIELDS)	30	1
	LINUM LEWISII[1] (BLUE FLAX)	50	1
	LUPINUS BICOLOR[1] (BICOLOR LUPINE)	50	10

[1]SEED PRODUCED IN CALIFORNIA ONLY.

EROSION CONTROL TYPE 1

SEQUENCE	ITEM	MATERIAL DESCRIPTION	MATERIAL TYPE	APPLICATION RATE	REMARKS
STEP 1	HYDROSEED	SEED		87 LB/ACRE	
		FIBER	WOOD	1100 LB/ACRE	
		COMPOST	MEDIUM	70 CY/ACRE	½INCH DEPTH
STEP 2	STRAW	STRAW	WHEAT &/OR BARLEY	2 TON/ACRE	
STEP 3	HYDROMULCH	FIBER	WOOD	1100 LB/ACRE	
		TACKIFIER	PSYLLIUM	140 LB/ACRE	
		COMPOST	MEDIUM	70 CY/ACRE	½INCH DEPTH

EROSION CONTROL QUANTITIES

LOCATION	DESCRIPTION	HYDROSEED (SQFT)	STRAW (SQFT)	HYDROMULCH (SQFT)
	EC TYPE 1	10,763	10,763	10,763
	TOTAL	10,763	10,763	10,763

EROSION CONTROL PLAN AND QUANTITIES

SCALE: 1" = 50'

ECL-1

APPROVED FOR LANDSCAPE WORK ONLY

STATE OF CALIFORNIA - DEPARTMENT OF TRANSPORTATION
Caltrans® LANDSCAPE ARCHITECTURE

FUNCTIONAL SUPERVISOR: TIM BOESE
CALCULATED-DESIGNED BY: PHLORA BARBASH
CHECKED BY: LAURA LAZZAROTTO
REVISED BY
DATE REVISED

P:\PROJ\01\0C370\drafting\sheets\0112000283te001.dgn

LAST REVISION 03-24-16
DATE PLOTTED =>
TIME PLOTTED =>

BORDER LAST REVISED 7/2/2010
USERNAME =>
DGN FILE =>
RELATIVE BORDER SCALE IS IN INCHES 0 1 2 3
UNIT 0314
PROJECT NUMBER & PHASE 01120002831

M

Maint	MAINTENANCE
Max	MAXIMUM
MB	METAL BEAM
MBB	METAL BEAM BARRIER
MBGR	METAL BEAM GUARD RAILING
Med	MEDIAN
MGS	MIDWEST GUARDRAIL SYSTEM
MH	MANHOLE
Min	MINIMUM
Misc	MISCELLANEOUS
Misc I & S	MISCELLANEOUS IRON AND STEEL
Mkr	MARKER
Mod	MODIFIED,
	MODIFY
Mon	MONUMENT
MP	METAL PLATE
MPGR	METAL PLATE GUARD RAILING
MR	MOVEMENT RATING
MSE	MECHANICALLY STABILIZED EMBANKMENT
Mt	MOUNTAIN, MOUNT
Mtl	MATERIAL
MVP	MAINTENANCE VEHICLE PULLOUT

N

N	NORTH
NB	NORTHBOUND
No.	NUMBER (MUST HAVE PERIOD)
Nos.	NUMBERS (MUST HAVE PERIOD)
NPS	NOMINAL PIPE SIZE
NS	NEAR SIDE
NSP	NEW STANDARD PLAN
NTS	NOT TO SCALE

O

Oblr	OBLITERATE
OC	OVERCROSSING
OD	OUTSIDE DIAMETER
OF	OUTSIDE FACE
OG	ORIGINAL GROUND
OGAC	OPEN GRADED ASPHALT CONCRETE
OGFC	OPEN GRADED FRICTION COURSE
OH	OVERHEAD
OHWM	ORDINARY HIGH WATER MARK
O-O	OUT TO OUT
Opp	OPPOSITE
OSD	OVERSIDE DRAIN

P

p	PAGE
PAP	PERFORATED ALUMINUM PIPE
PB	PULL BOX
PC	POINT OF CURVATURE,
	PRECAST
PCC	POINT OF COMPOUND CURVE,
	PORTLAND CEMENT CONCRETE
PCMS	PORTABLE CHANGEABLE MESSAGE SIGN
PCP	PERFORATED CONCRETE PIPE,
	PRESTRESSED CONCRETE PIPE
PCVC	POINT OF COMPOUND VERTICAL CURVE
PEC	PERMIT TO ENTER AND CONSTRUCT
Ped	PEDESTRIAN
Ped OC	PEDESTRIAN OVERCROSSING
Ped UC	PEDESTRIAN UNDERCROSSING
Perm Mtl	PERMEABLE MATERIAL

P continued

PG	PROFILE GRADE
PI	POINT OF INTERSECTION
PJP	PARTIAL JOINT PENETRATION
Pkwy	PARKWAY
ℙ,PL	PLATE
P/L	PROPERTY LINE
PM	POST MILE,
	TIME FROM NOON TO MIDNIGHT
PN	PAVING NOTCH
POC	POINT OF HORIZONTAL CURVE
POT	POINT OF TANGENT
POVC	POINT OF VERTICAL CURVE
PP	PIPE PILE,
	PLASTIC PIPE,
	POWER POLE
PPL	PREFORMED PERMEABLE LINER
PPP	PERFORATED PLASTIC PIPE
PRC	POINT OF REVERSE CURVE
PRF	PAVEMENT REINFORCING FABRIC
PRVC	POINT OF REVERSE VERTICAL CURVE
PS&E	PLANS, SPECIFICATIONS AND ESTIMATES
PS, P/S	PRESTRESSED
PSP	PERFORATED STEEL PIPE
PT	POINT OF TANGENCY
PVC	POLYVINYL CHLORIDE
Pvmt	PAVEMENT

Q

Qty	QUANTITY

R

R	RADIUS
R & D	REMOVE AND DISPOSE
R & S	REMOVE AND SALVAGE
R/C	RATE OF CHANGE
RCA	REINFORCED CONCRETE ARCH
RCB	REINFORCED CONCRETE BOX
RCP	REINFORCED CONCRETE PIPE
RCPA	REINFORCED CONCRETE PIPE ARCH
Rd	ROAD
Reinf	REINFORCED,
	REINFORCEMENT,
	REINFORCING
Rel	RELOCATE
Repl	REPLACEMENT
Ret	RETAINING
Rev	REVISED, REVISION
Rdwy	ROADWAY
RHMA	RUBBERIZED HOT MIX ASPHALT
Riv	RIVER
RM	ROAD-MIXED
RP	RADIUS POINT,
	REFERENCE POINT
RR	RAILROAD
RSP	ROCK SLOPE PROTECTION,
	REVISED STANDARD PLAN
Rt	RIGHT
Rte	ROUTE
RW	REDWOOD,
	RETAINING WALL
R/W	RIGHT OF WAY
Rwy	RAILWAY

S

S	SOUTH,
	SUPPLEMENT
SAE	STRUCTURE APPROACH EMBANKMENT
Salv	SALVAGE
SAPP	STRUCTURAL ALUMINUM PLATE PIPE
SB	SOUTHBOUND
SC	SAND CUSHION
SCSP	SLOTTED CORRUGATED STEEL PIPE
SD	STORM DRAIN
Sec	SECOND,
	SECTION
Sep	SEPARATION
SG	SUBGRADE
Shld	SHOULDER
Sht	SHEET
Sim	SIMILAR
₤	STATION LINE
SM	SELECTED MATERIAL
Spec	SPECIAL,
	SPECIFICATIONS
SPP	SLOTTED PLASTIC PIPE
SS	SLOPE STAKE
SSBM	STRAP AND SADDLE BRACKET METHOD
SSD	STRUCTURAL SECTION DRAIN
SSPA	STRUCTURAL STEEL PLATE ARCH
SSPP	STRUCTURAL STEEL PLATE PIPE
SSPPA	STRUCTURAL STEEL PLATE PIPE ARCH
SSRP	STEEL SPIRAL RIB PIPE
St	STREET
Sta	STATION
STBB	SINGLE THRIE BEAM BARRIER
Std	STANDARD
Str	STRUCTURE
Surf	SURFACING
SW	SIDEWALK,
	SOUND WALL
Swr	SEWER
Sym	SYMMETRICAL
S4S	SURFACE 4 SIDES

T

T	SEMI-TANGENT
Tan	TANGENT
TBB	THRIE BEAM BARRIER
Tbr	TIMBER
TC	TOP OF CURB
TCB	TRAFFIC CONTROL BOX
TCE	TEMPORARY CONSTRUCTION EASEMENT
Tel	TELEPHONE
Temp	TEMPORARY
TG	TOP OF GRADE
Tot	TOTAL
TP	TELEPHONE POLE
TPB	TREATED PERMEABLE BASE
TPM	TREATED PERMEABLE MATERIAL
Trans	TRANSITION

T continued

TS	TRANSVERSE,
	TRAFFIC SIGNAL,
	TUBULAR STEEL
Typ	TYPICAL

U

UC	UNDERCROSSING
UD	UNDERDRAIN
UG	UNDERGROUND
UON	UNLESS OTHERWISE NOTED
UP	UNDERPASS

V

V	VALVE,
	DESIGN SPEED
Var	VARIABLE,
	VARIES
VC	VERTICAL CURVE
VCP	VITRIFIED CLAY PIPE
Vert	VERTICAL
Via	VIADUCT
Vol	VOLUME

W

W	WEST,
	WIDTH
WB	WESTBOUND
WH	WEEP HOLE
WM	WIRE MESH
WS	WATER SURFACE
WSP	WELDED STEEL PIPE
Wt	WEIGHT
WV	WATER VALVE
WW	WINGWALL
WWLOL	WINGWALL LAYOUT LINE

X

X Sec	CROSS SECTION
Xing	CROSSING

Y

Yr	YEAR
Yrs	YEARS

Dist	COUNTY	ROUTE	POST MILES TOTAL PROJECT	SHEET No.	TOTAL SHEETS
01	Hum	101	R89.2	16	21

Grace M. Tsushima
REGISTERED CIVIL ENGINEER

July 19, 2013
PLANS APPROVAL DATE

REGISTERED PROFESSIONAL ENGINEER Grace M. Tsushima No. C49814 Exp. 9-30-14 CIVIL STATE OF CALIFORNIA

THE STATE OF CALIFORNIA OR ITS OFFICERS OR AGENTS SHALL NOT BE RESPONSIBLE FOR THE ACCURACY OR COMPLETENESS OF SCANNED COPIES OF THIS PLAN SHEET.

TO ACCOMPANY PLANS DATED 05-02-16

UNIT OF MEASUREMENT SYMBOLS:

Some of the symbols used in the project plan quantity tables and in the Bid Item List are:

TABLE A

SYMBOL USED	DEFINITIONS
ACRE	ACRE
CF	CUBIC FOOT
CY	CUBIC YARD
EA	EACH
GAL	GALLON
LB	POUND
LF	LINEAR FOOT
SQFT	SQUARE FOOT
SQYD	SQUARE YARD
STA	100 FEET
TAB	TABLET
TON	2,000 POUNDS

Some of the symbols used in the plans other than in the project plan quantity tables are:

TABLE B

SYMBOL USED	DEFINITIONS
ksi	KIPS PER SQUARE INCH
ksf	KIPS PER SQUARE FOOT
psi	POUNDS PER SQUARE INCH
psf	POUNDS PER SQUARE FOOT
lb/ft^3, pcf	POUNDS PER CUBIC FOOT
tsf	TONS PER SQUARE FOOT
mph, MPH *	MILES PER HOUR
ø	NOMINAL DIAMETER
oz	OUNCE
lb	POUND
kip	1,000 POUNDS
cal	CALORIE
ft	FOOT OR FEET
gal	GALLON

* For use on a sign panel only

STATE OF CALIFORNIA
DEPARTMENT OF TRANSPORTATION

ABBREVIATIONS (SHEET 2 OF 2)

NO SCALE

RSP A10B DATED JULY 19, 2013 SUPERSEDES STANDARD PLAN A10B DATED MAY 20, 2011 - PAGE 2 OF THE STANDARD PLANS BOOK DATED 2010.

REVISED STANDARD PLAN RSP A10B

2010 REVISED STANDARD PLAN RSP A10B

P:\PROJ\01\0C370\drafting\sheets\0112000283va001.dgn

6-7-13

Dist	COUNTY	ROUTE	POST MILES TOTAL PROJECT	SHEET No.	TOTAL SHEETS
01	Hum	101	R89.2	17	21

REGISTERED CIVIL ENGINEER

October 30, 2015
PLANS APPROVAL DATE

REGISTERED PROFESSIONAL ENGINEER
Carl M. Duan
No. C59976
Exp. 6-30-16
CIVIL
STATE OF CALIFORNIA

THE STATE OF CALIFORNIA OR ITS OFFICERS OR AGENTS SHALL NOT BE RESPONSIBLE FOR THE ACCURACY OR COMPLETENESS OF SCANNED COPIES OF THIS PLAN SHEET.

TO ACCOMPANY PLANS DATED 05-02-16

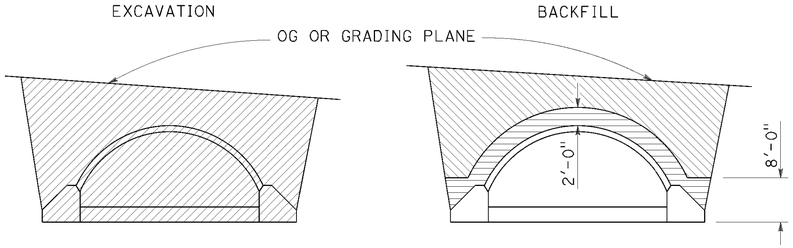

IN TRENCH

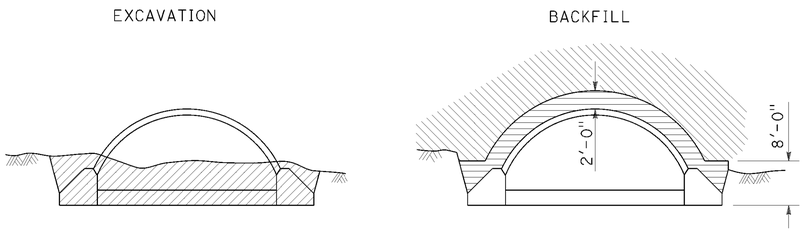

IN EMBANKMENT

STRUCTURAL STEEL PLATE ARCHES

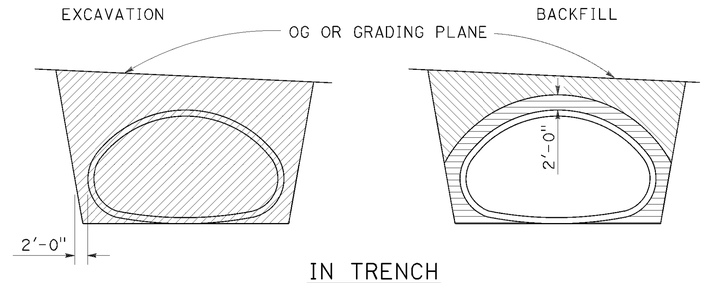

IN TRENCH

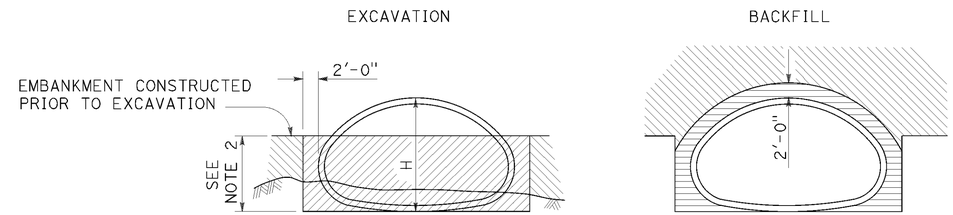

IN EMBANKMENT

STRUCTURAL STEEL PLATE PIPE ARCHES AND VEHICULAR UNDERCROSSING

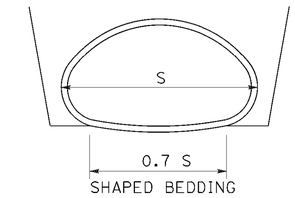

SHAPED BEDDING

S = Larger than 84"

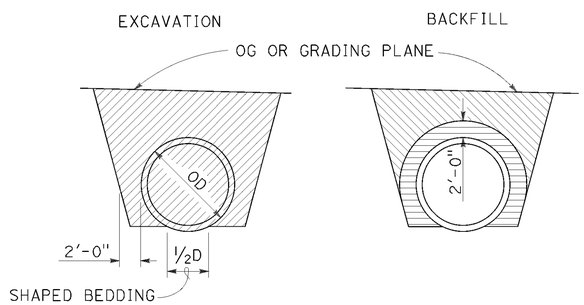

IN TRENCH

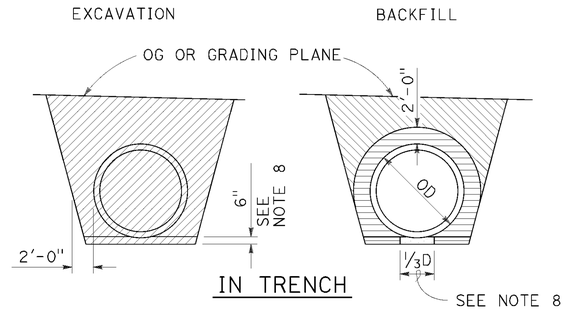

IN TRENCH

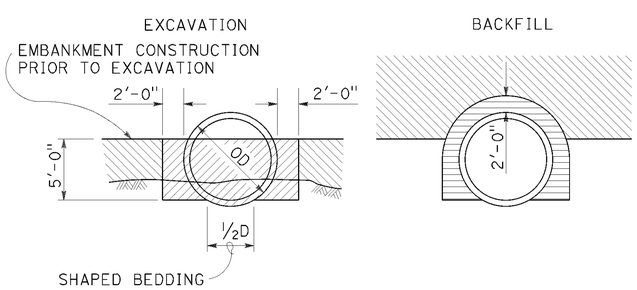

IN EMBANKMENT

PIPES

Larger than 84"

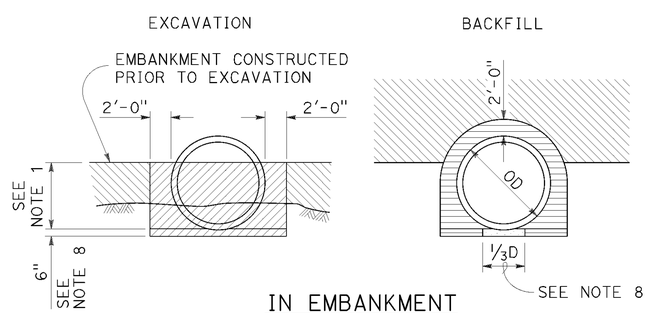

IN EMBANKMENT

METAL AND PLASTIC PIPES AND CORRUGATED METAL PIPE ARCHES

84" or Smaller

NOTES:

1. PIPES: 30" minimum for diameters up to and including 42" then ⅔ diameter but no more than 60" required. CORRUGATED METAL PIPE ARCHES: 30" maximum.
2. ⅔ H up to 60" maximum.
3. Slope or shore excavation sides as necessary.
4. Backfill shall be placed full width of excavation except as noted.
5. Diagrams do not apply to overside drains.
6. Dimensions shown are minimum.
7. Construction strutting of structural steel plate pipe, arches and vehicular undercrossing to be used when shown on the project plans. When shown, see Standard Plan D88A for strutting requirements.
8. Excavation below pipe and 80% relative compaction requirements for plastic pipes only.
9. D is the inside diameter (ID) of the pipe.

LEGEND

- STRUCTURE EXCAVATION (CULVERT)
- ROADWAY EMBANKMENT
- STRUCTURE BACKFILL (CULVERT) 95% RELATIVE COMPACTION
- STRUCTURE BACKFILL (CULVERT) 80% RELATIVE COMPACTION

STATE OF CALIFORNIA
DEPARTMENT OF TRANSPORTATION

EXCAVATION AND BACKFILL METAL AND PLASTIC CULVERTS

NO SCALE

RSP A62F DATED OCTOBER 30, 2015 SUPERSEDES STANDARD PLAN A62F DATED MAY 20, 2011 - PAGE 26 OF THE STANDARD PLANS BOOK DATED 2010.

REVISED STANDARD PLAN RSP A62F

2010 REVISED STANDARD PLAN RSP A62F

P:\PROJ\01\0C370\drafting\sheets\0112000283va002.dgn

10-13-15

Dist	COUNTY	ROUTE	POST MILES TOTAL PROJECT	SHEET No.	TOTAL SHEETS
01	Hum	101	R89.2	18	21

REGISTERED CIVIL ENGINEER

January 15, 2016
PLANS APPROVAL DATE

REGISTERED PROFESSIONAL ENGINEER
Michael Janzen
No. 44788
Exp. 3-31-16
CIVIL
STATE OF CALIFORNIA

THE STATE OF CALIFORNIA OR ITS OFFICERS OR AGENTS SHALL NOT BE RESPONSIBLE FOR THE ACCURACY OR COMPLETENESS OF SCANNED COPIES OF THIS PLAN SHEET.

TO ACCOMPANY PLANS DATED 05-02-16

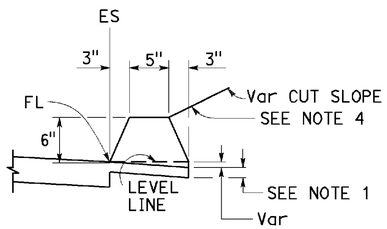

TYPE A
See Notes 3 and 5

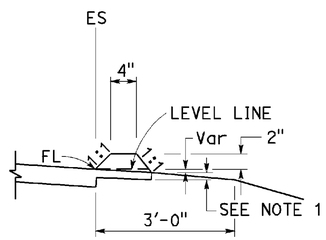

TYPE C

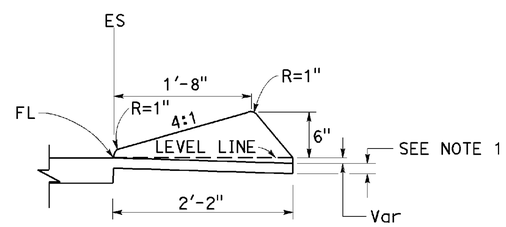

TYPE D

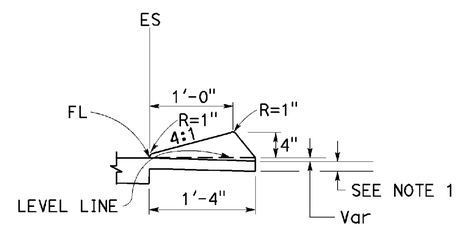

TYPE E

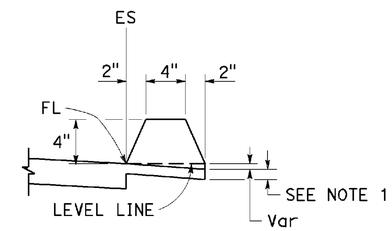

TYPE F
See Note 5

DIKES

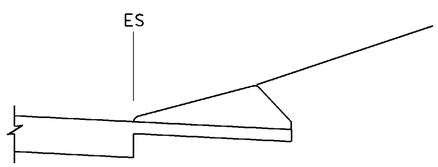

CASE C-1
Cut Slope

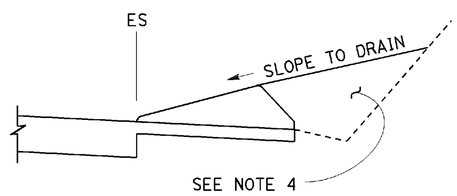

CASE C-2
Cut Slope

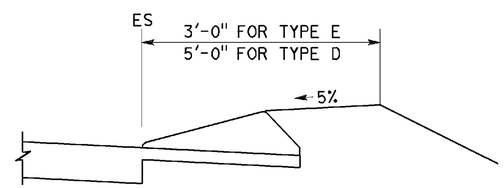

CASE F

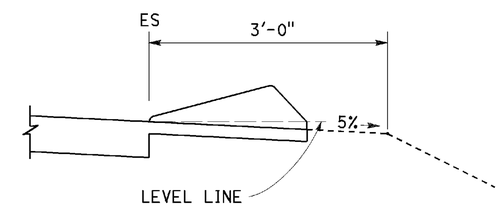

CASE R
See Note 2

TYPE D AND E BACKFILL DETAILS

NOTES:

1. For HMA shoulders only, extend top layer of HMA placed on the shoulder under dike with no joint at the ES. For projects with OGFC shoulders, do not extend OGFC under dike. See project plans for modified dike detail.
2. Case R applies to retrofit only projects where restrictive conditions do not provide enough width for Case F backfill.
3. Type A dike only to be used where restrictive slope conditions do not provide enough width to use Type D or Type E dike.
4. Fill and compact with excavated material to top of dike.
5. Use Type A or F dike, where dike is required with guardrail installations. See Revised Standard Plan RSP A77N4 for dike positioning details. See Revised Standard Plan RSP A77N3 for hinge point offsets with guardrail.

DIKE QUANTITIES

TYPE	CUBIC YARDS PER LINEAR FOOT
A	0.0135
C	0.0038
D	0.0293
E	0.0130
F	0.0066

Quantities based on 5% cross slope.

STATE OF CALIFORNIA
DEPARTMENT OF TRANSPORTATION

HOT MIX ASPHALT DIKES

NO SCALE

RSP A87B DATED JANUARY 15, 2016 SUPERSEDES RSP A87B DATED JULY 19, 2013 AND STANDARD PLAN A87B DATED MAY 20, 2011 - PAGE 120 OF THE STANDARD PLANS BOOK DATED 2010.

REVISED STANDARD PLAN RSP A87B

2010 REVISED STANDARD PLAN RSP A87B

P:\PROJ\01\0C370\drafting\sheets\0112000283va003.dgn

11-17-15

Dist	COUNTY	ROUTE	POST MILES TOTAL PROJECT	SHEET No.	TOTAL SHEETS
01	Hum	101	R89.2	19	21

REGISTERED CIVIL ENGINEER

October 30, 2015
PLANS APPROVAL DATE

REGISTERED PROFESSIONAL ENGINEER Srikanth N. Balasubramanian No. C56426 Exp. 6-30-17 CIVIL STATE OF CALIFORNIA

THE STATE OF CALIFORNIA OR ITS OFFICERS OR AGENTS SHALL NOT BE RESPONSIBLE FOR THE ACCURACY OR COMPLETENESS OF SCANNED COPIES OF THIS PLAN SHEET.

TO ACCOMPANY PLANS DATED 05-02-16

ABBREVIATIONS:

TE TAPERED EDGE

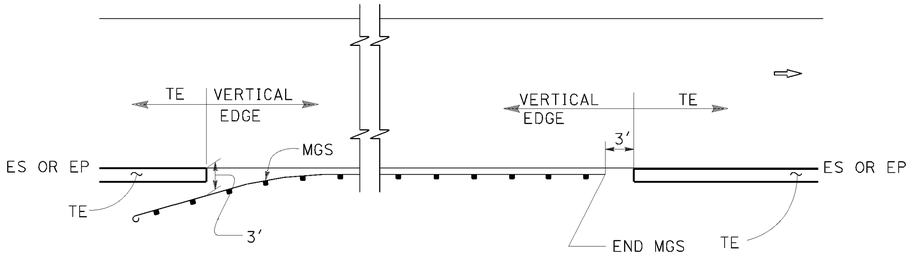

MGS

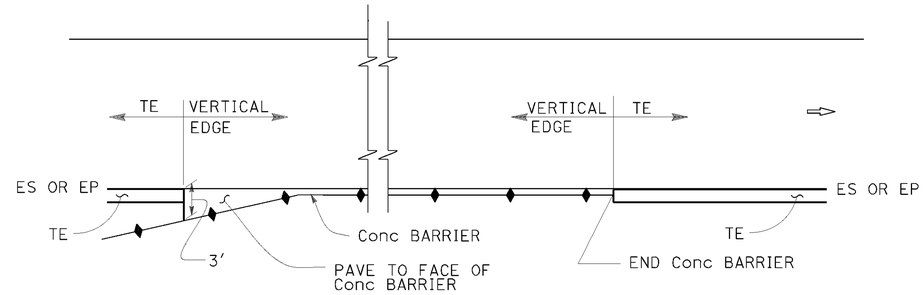

CONCRETE BARRIER

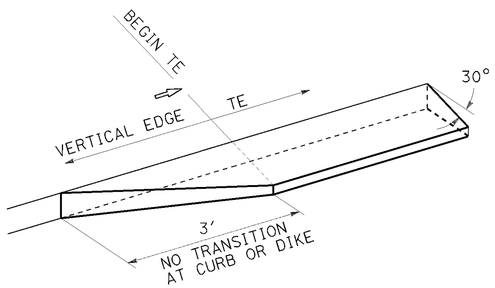

TRANSITION DETAIL FOR CONCRETE ONLY

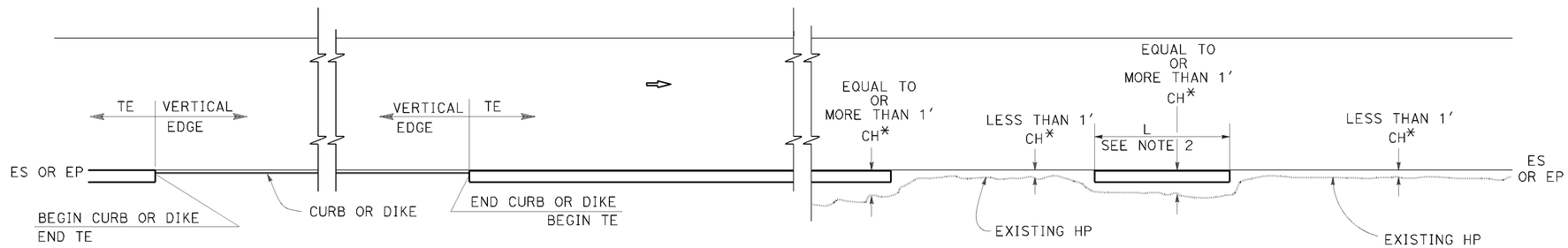

CURB OR DIKE

NARROW SIDE SLOPE

* CH = Distance from ES or EP to existing HP.

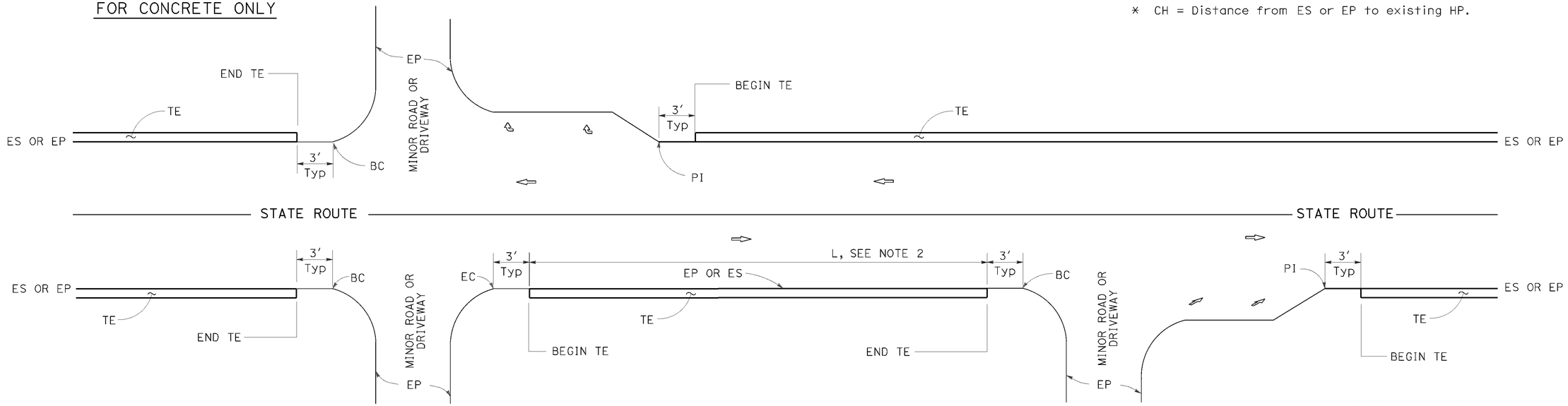

INTERTECTION

DRIVEWAY AND INTERSECTION

MINOR ROADWAY OR DRIVEWAY

STATE OF CALIFORNIA
DEPARTMENT OF TRANSPORTATION

PAVEMENT EDGE TREATMENTS

NO SCALE

NOTES:

1. For details not shown, see Revised Standard Plans RSP P75 and RSP P76.
2. Tapered edge is optional when L is less than 30′.

RSP P74 DATED OCTOBER 30, 2015 SUPERSEDES RSP P74 DATED NOVEMBER 15, 2013 AND RSP P74 DATED JANUARY 20, 2012 THAT SUPPLEMENTS THE STANDARD PLANS BOOK DATED 2010.

REVISED STANDARD PLAN RSP P74

2010 REVISED STANDARD PLAN RSP P74

P:\PROJ\01\0C370\drafting\sheets\0112000283va004.dgn

10-13-15

Dist	COUNTY	ROUTE	POST MILES TOTAL PROJECT	SHEET No.	TOTAL SHEETS
01	Hum	101	R89.2	20	21

REGISTERED CIVIL ENGINEER

October 30, 2015
PLANS APPROVAL DATE

REGISTERED PROFESSIONAL ENGINEER Srikanth N. Balasubramanian No. C56426 Exp. 6-30-17 CIVIL STATE OF CALIFORNIA

THE STATE OF CALIFORNIA OR ITS OFFICERS OR AGENTS SHALL NOT BE RESPONSIBLE FOR THE ACCURACY OR COMPLETENESS OF SCANNED COPIES OF THIS PLAN SHEET.

TO ACCOMPANY PLANS DATED 05-02-16

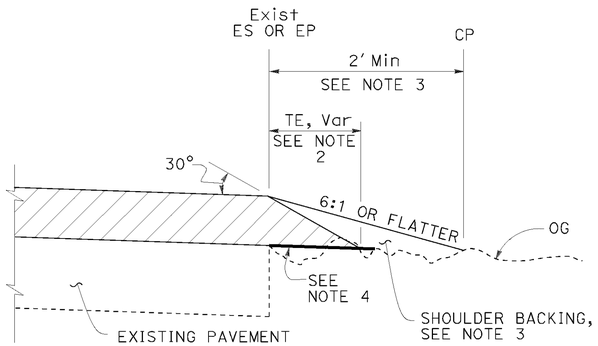

CASE A
Tapered Edge

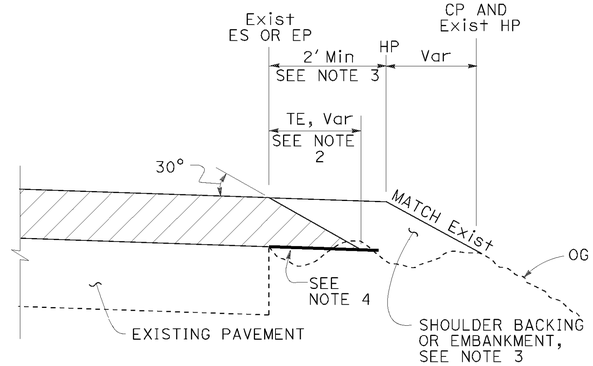

CASE B
Tapered Edge

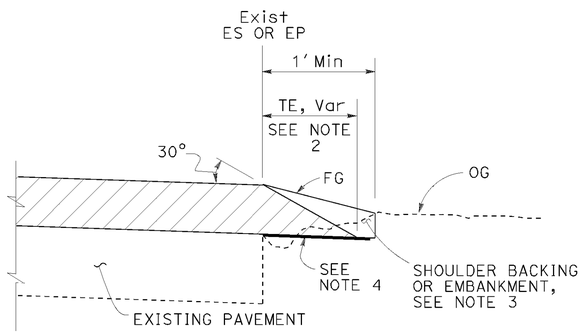

CASE C
Tapered Edge

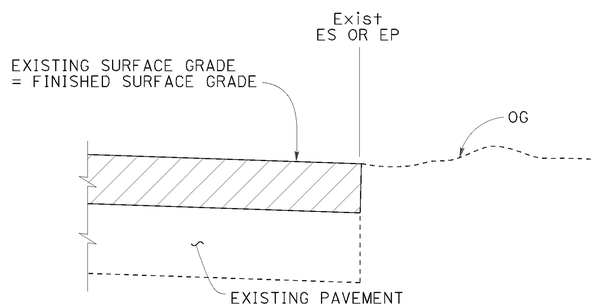

CASE D
Vertical Edge

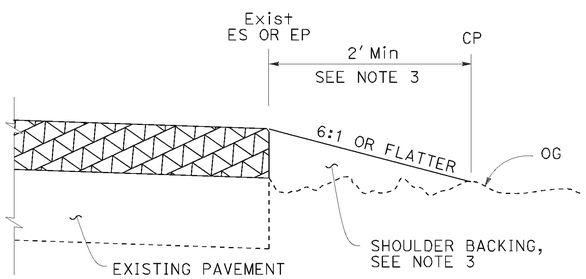

CASE E
Vertical Edge

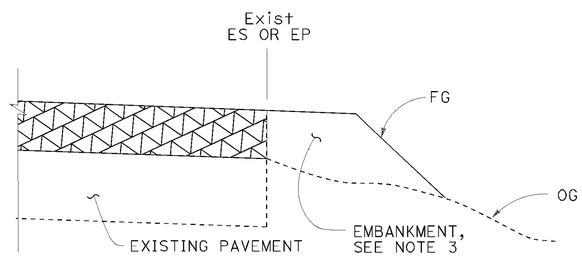

CASE F
Vertical Edge
* See Table A and Revised Std Plan RSP P74

LEGEND:

- HMA OVERLAY
- HMA OR CONCRETE OVERLAY
- CONCRETE OVERLAY

ABBREVIATIONS:

TE TAPERED EDGE
TT TOTAL THICKNESS OF TE

TABLE A
EDGE TREATMENT FOR VARIOUS OVERLAY THICKNESS AND CONDITIONS

	OVERLAY THICKNESS	
FIELD CONDITION	LESS THAN 0.15'	0.15' OR MORE
Exist SLOPE 6:1 OR FLATTER	CASE E	CASE A
Exist SLOPE 3:1 TO 6:1	CASE E	CASE B
Exist SLOPE STEEPER THAN 3:1	CASE F	CASE F
CUT SECTION (REPLACE, COLD PLANE, MILL PAVEMENT)	CASE D	CASE C

ADDITIONAL HMA OR CONCRETE QUANTITIES FOR TE/SIDE/MILE

TYPICAL CROSS SECTION	TT	TOTAL ADDITIONAL MATERIAL FOR TE/SIDE/MILE		
		HMA (TON)	CONCRETE (CY)*	CONCRETE (CY)**
TT	0.15'	7.7	NA	NA
	0.20'	13.7	NA	NA
	0.30'	30.9	NA	NA
	0.40'	54.9	NA	NA
	0.45'	69.4	NA	NA
TT 0.43'	0.50'	84.2	NA	NA
	0.60'	113.9	NA	NA
	0.70'	143.6	70.9	94.2
	0.80'	173.3	85.6	112.2
	0.90'	203.0	100.3	130.2
	1.00'	232.7	114.9	148.2
	1.10'	262.4	129.6	166.2
	1.20'	292.1	144.3	184.2

* For Detail "A"
** For Optional Detail "A"

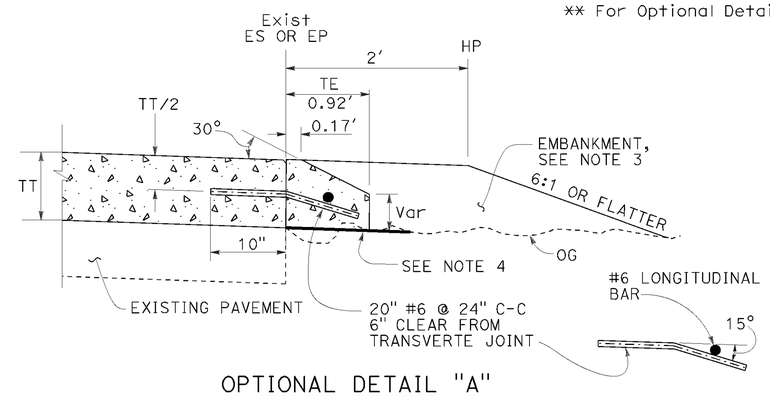

OPTIONAL DETAIL "A"
For concrete overlay
See Note 5

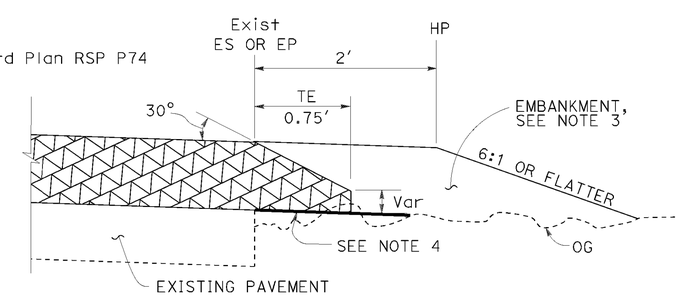

DETAIL "A"
For HMA overlay thickness more than 0.43' or concrete overlay

NOTES:

1. For limits of tapered edge and vertical edge treatments, see Revised Standard Plan RSP P74.
2. Details shown for HMA overlay thickness less than 0.43'. See Detail "A" for HMA overlay thickness more than 0.43' or concrete overlay.
3. For locations and limits of shoulder backing or embankment see project plans.
4. Grade existing ground to place tapered edge. 1' minimum width
5. Tapered edge transverse joint must match overlay transverse joint. End of #6 longitudinal bar must be 2" ±½" clear from transverse joint.
6. Tapered edge is not needed in the area of MGS, barrier, right turn lane and acceleration lane. See Revised Standard Plan RSP P74.

STATE OF CALIFORNIA
DEPARTMENT OF TRANSPORTATION

PAVEMENT EDGE TREATMENTS-OVERLAYS

NO SCALE

RSP P75 DATED OCTOBER 30, 2015 SUPERSEDES RSP P75 DATED NOVEMBER 15, 2013 AND RSP P75 DATED JANUARY 20, 2012 THAT SUPPLEMENTS THE STANDARD PLANS BOOK DATED 2010.

REVISED STANDARD PLAN RSP P75

2010 REVISED STANDARD PLAN RSP P75

P:\PROJ\01\0C370\drafting\sheets\0112000283va005.dgn

7-2-15

Dist	COUNTY	ROUTE	POST MILES TOTAL PROJECT	SHEET No.	TOTAL SHEETS
01	Hum	101	R89.2	21	21

REGISTERED CIVIL ENGINEER

October 30, 2015
PLANS APPROVAL DATE

REGISTERED PROFESSIONAL ENGINEER Srikanth N. Balasubramanian No. C56426 Exp. 6-30-17 CIVIL STATE OF CALIFORNIA

THE STATE OF CALIFORNIA OR ITS OFFICERS OR AGENTS SHALL NOT BE RESPONSIBLE FOR THE ACCURACY OR COMPLETENESS OF SCANNED COPIES OF THIS PLAN SHEET.

TO ACCOMPANY PLANS DATED 05-02-16

LEGEND:

- HMA PAVEMENT
- HMA OR CONCRETE PAVEMENT
- CONCRETE PAVEMENT

ABBREVIATIONS:

TE TAPERED EDGE
TT TOTAL THICKNESS OF TE
HW HINGE WIDTH, DISTANCE FROM ES OR EP TO HP

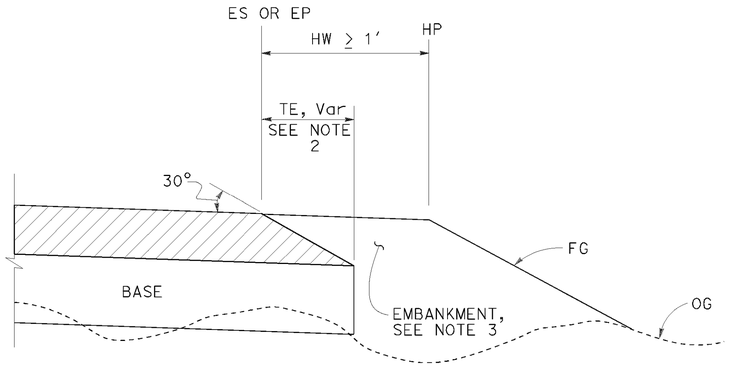

CASE K
Tapered Edge - Fill Section, HW ≥ 1′

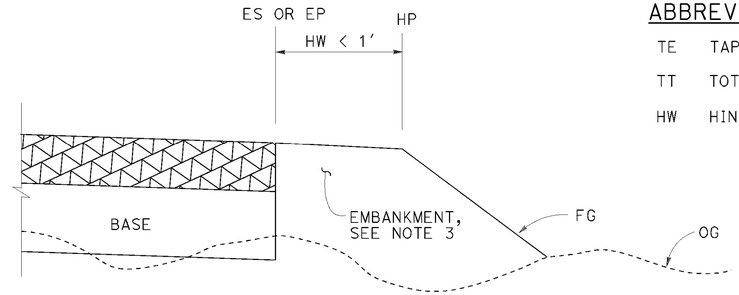

CASE L
Vertical Edge - Fill Section, HW < 1′

FILL SECTION

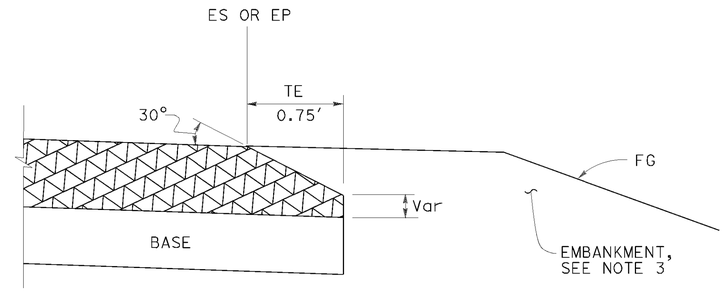

DETAIL "B"
For HMA pavement thickness more than 0.43′ or concrete pavement

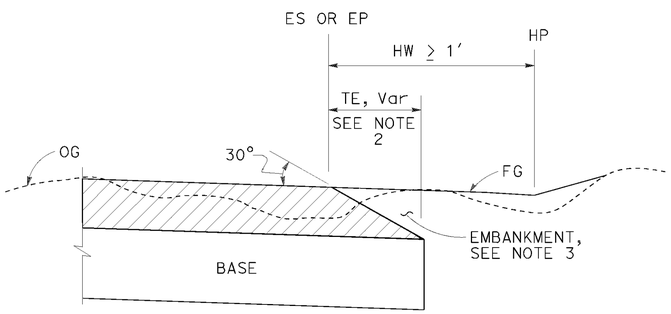

CASE M
Tapered Edge - Cut Section, HW ≥ 1′

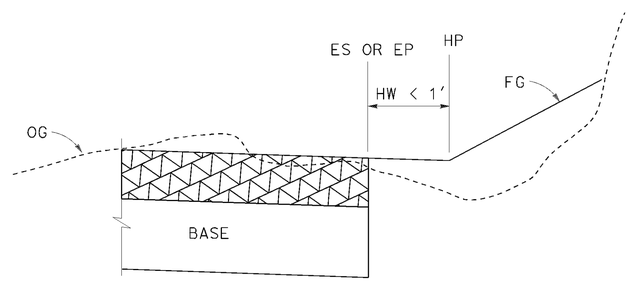

CASE N
Vertical Edge - Cut Section, HW < 1′

CUT SECTION

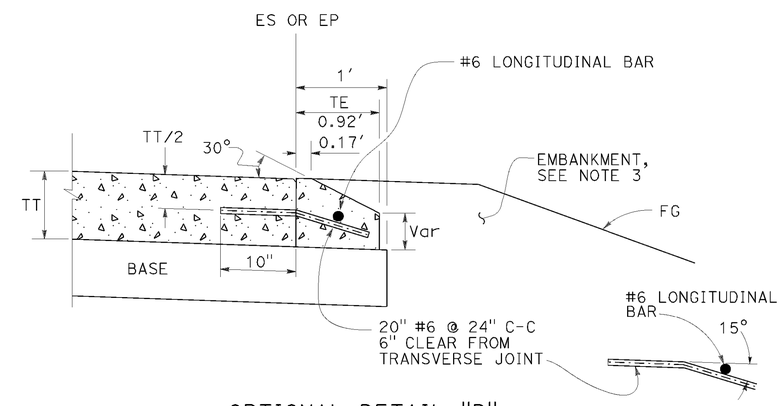

OPTIONAL DETAIL "B"
For concrete pavement
See Note 4

NOTES:

1. For limits of tapered edge and vertical edge treatments, see Revised Standard Plan RSP P74
2. Details shown for HMA pavement thickness less than 0.43′. See Detail "B" for HMA pavement thickness more than 0.43′ or concrete pavement.
3. For locations and limits of embankment see project plans.
4. Tapered edge transverse joint must match pavement transverse joint. End of #6 longitudinal bar must be 2" ±½" clear from transverse joint.
5. Tapered edge is not needed in the area of MGS, barrier, right turn lane and acceleration lane. See Revised Standard Plan RSP P74.

STATE OF CALIFORNIA
DEPARTMENT OF TRANSPORTATION

PAVEMENT EDGE TREATMENTS-NEW CONSTRUCTION

NO SCALE

RSP P76 DATED OCTOBER 30, 2015 SUPERSEDES RSP P76 DATED NOVEMBER 15, 2013 AND RSP P76 DATED JANUARY 20, 2012 THAT SUPPLEMENTS THE STANDARD PLANS BOOK DATED 2010.

REVISED STANDARD PLAN RSP P76

2010 REVISED STANDARD PLAN RSP P76

P:\PROJ\01\0C370\drafting\sheets\0112000283va006.dgn

7-2-15