Dist	COUNTY	ROUTE	POST MILES TOTAL PROJECT	SHEET No.	TOTAL SHEETS
01	Men	162	13.9,22.7	1	59

STATE OF CALIFORNIA

DEPARTMENT OF TRANSPORTATION

ACST-ER-19D2(004)E

PROJECT PLANS FOR CONSTRUCTION ON

STATE HIGHWAY

IN MENDOCINO COUNTY NEAR DOS RIOS AT 1.2 MILES WEST OF MIDDLE FORK EEL RIVER BRIDGE AND AT 2.8 MILES EAST OF SAND BANK CREEK

TO BE SUPPLEMENTED BY STANDARD PLANS DATED MAY 2010

INDEX OF PLANS

SHEET No	DESCRIPTION
1	TITLE AND LOCATION MAP
2-3	TYPICAL CROSS SECTIONS
4	LAYOUTS
5	PROFILE AND SUPERELEVATION DIAGRAM
6	CONSTRUCTION DETAILS
7-9	DRAINAGE PLANS, PROFILES, DETAILS AND QUANTITIES
10	CONSTRUCTION AREA SIGNS
11-12	TRAFFIC HANDLING PLANS, DETAILS AND QUANTITIES
13	PAVEMENT DELINEATION PLANS, DETAILS AND QUANTITIES
14	SUMMARY OF QUANTITIES
15-17	EROSION CONTROL PLANS, DETAILS AND QUANTITIES
18-19	SIGNAL, LIGHTING AND ELECTRICAL SYSTEMS PLANS AND DETAILS
20-46	REVISED STANDARD PLANS
	STRUCTURE PLANS
47-59	DOS RIOS SLIPS WALL Br No 10E0035

THE STANDARD PLANS LIST APPLICABLE TO THIS CONTRACT IS INCLUDED IN THE NOTICE TO BIDDERS AND SPECIAL PROVISIONS BOOK.

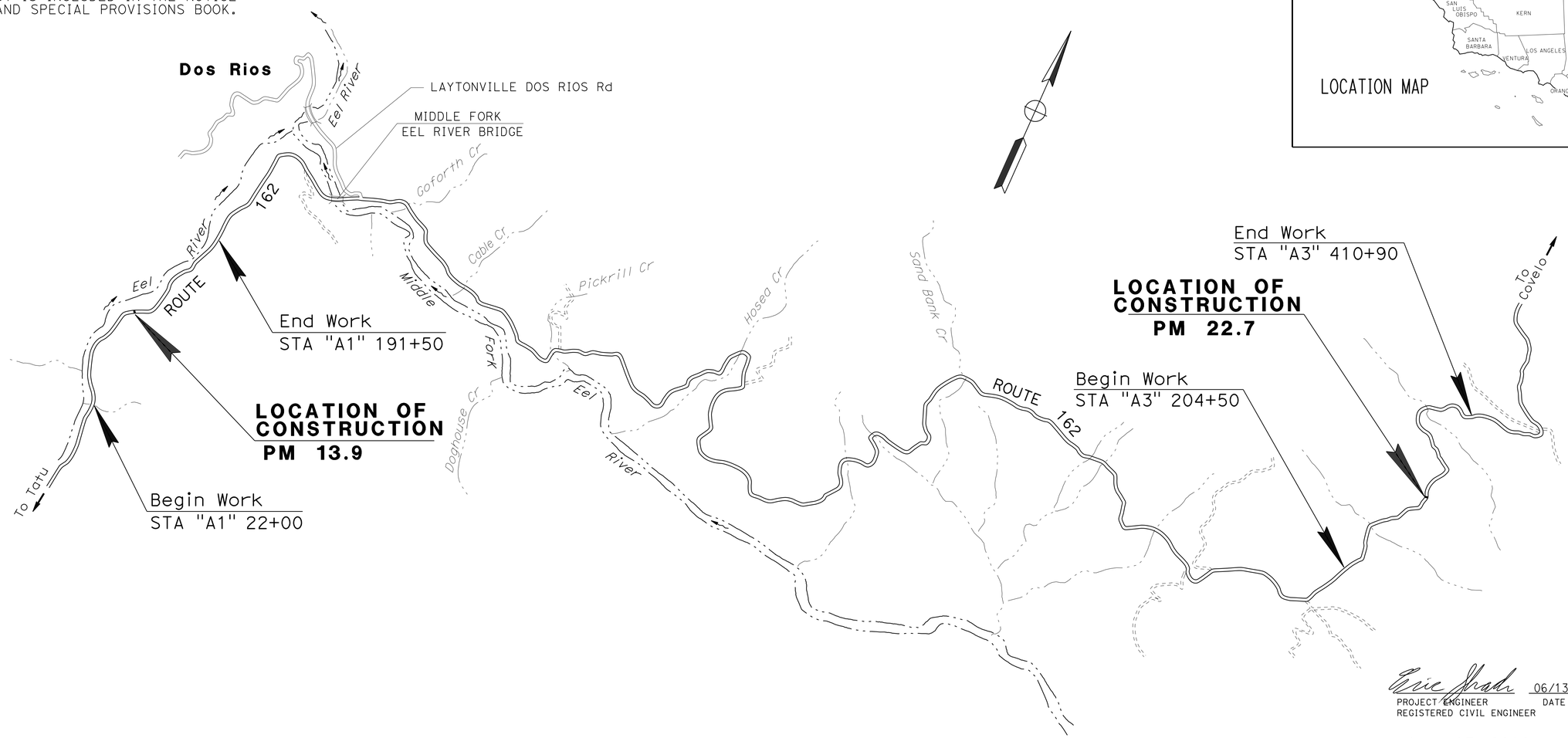

LOCATION MAP

NO SCALE

Eric Shada 06/13/16
PROJECT ENGINEER DATE
REGISTERED CIVIL ENGINEER

June 13, 2016
PLANS APPROVAL DATE

REGISTERED PROFESSIONAL ENGINEER ERIC D. SHADA No. 82121 Exp. 3-31-18 CIVIL STATE OF CALIFORNIA

THE STATE OF CALIFORNIA OR ITS OFFICERS OR AGENTS SHALL NOT BE RESPONSIBLE FOR THE ACCURACY OR COMPLETENESS OF SCANNED COPIES OF THIS PLAN SHEET.

THE CONTRACTOR SHALL POSSESS THE CLASS (OR CLASSES) OF LICENSE AS SPECIFIED IN THE "NOTICE TO BIDDERS."

CONTRACT No.	01-0B5404
PROJECT ID	0112000136

P:\PROJ\01\0B540\drafting\sheets\0112000136ab001.dgn

DESIGN MANAGER: KELLY TIMMONS
PROJECT MANAGER: STEVEN BLAIR

LAST REVISION 06-01-16
DATE PLOTTED => 16-AUG-2016
TIME PLOTTED => 10:17

Dist	COUNTY	ROUTE	POST MILES TOTAL PROJECT	SHEET No.	TOTAL SHEETS
01	Men	162	13.9,22.7	2	59

REGISTERED CIVIL ENGINEER 06/13/16 DATE

June 13, 2016
PLANS APPROVAL DATE

REGISTERED PROFESSIONAL ENGINEER ERIC D. SHADA No. 82121 Exp. 3-31-18 CIVIL STATE OF CALIFORNIA

THE STATE OF CALIFORNIA OR ITS OFFICERS OR AGENTS SHALL NOT BE RESPONSIBLE FOR THE ACCURACY OR COMPLETENESS OF SCANNED COPIES OF THIS PLAN SHEET.

NOTES:

1. DIMENSIONS OF THE PAVEMENT STRUCTURES (STRUCTURAL SECTIONS) ARE SUBJECT TO TOLERANCES SPECIFIED IN THE STANDARD SPECIFICATIONS.
2. SUPERELEVATIONS ARE SHOWN ON THE SUPERELEVATION DIAGRAMS.
3. EXACT LOCATIONS AND TYPES OF GUARD RAILING AND CONCRETE BARRIER ARE SHOWN ON THE LAYOUTS AND THE SUMMARY OF QUANTITIES SHEETS

ABBREVIATIONS

SR SUPERELEVATION RATE
TE TAPERED EDGE

DESIGN DESIGNATION

ADT (2013)	830	D	60%
ADT (2035)	1,100	T	9.0%
DHV	80	V	55 mph
ESAL	15,300	TI_{20}	8.0

PAVEMENT CLIMATE REGION

LOW MOUNTAIN

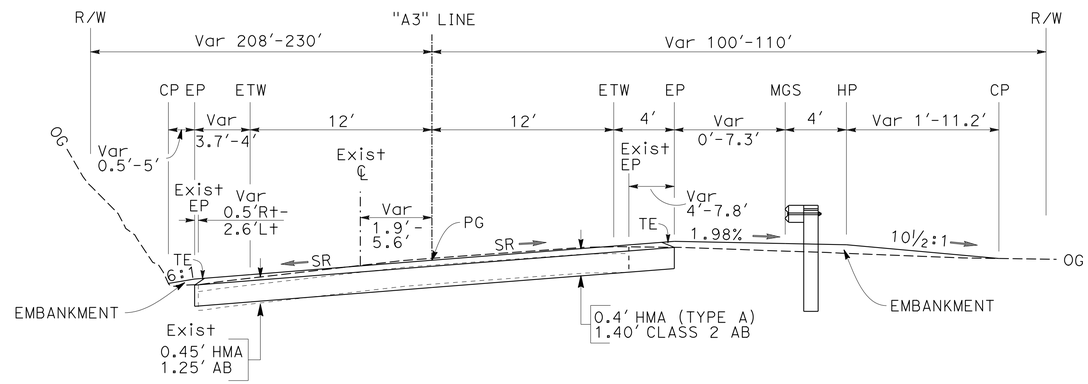

"A3" 300+81.26 TO "A3" 301+36.30

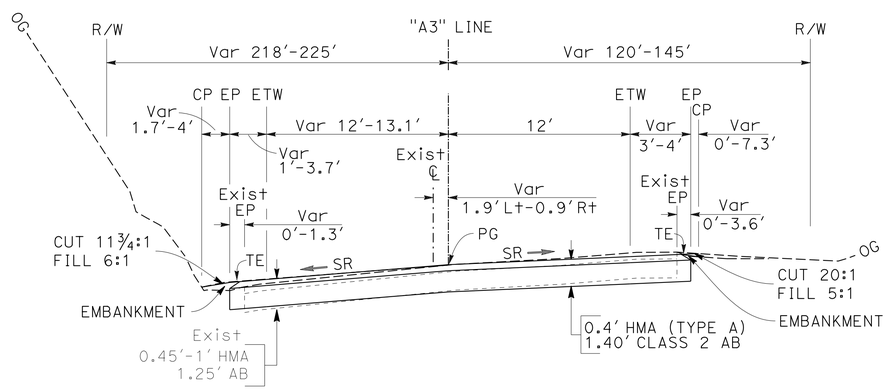

"A3" 300+00 TO "A3" 300+81.26

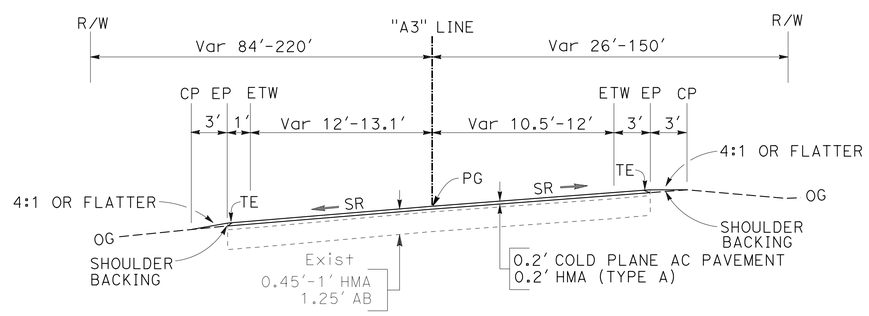

"A3" 304+75 TO "A3" 305+25
"A3" 299+50 TO "A3" 300+00

LOCATION 2
PM 22.7
ROUTE 162

TYPICAL CROSS SECTIONS

NO SCALE

X-1

STATE OF CALIFORNIA - DEPARTMENT OF TRANSPORTATION
Caltrans® **DESIGN**

FUNCTIONAL SUPERVISOR: KELLY B. TIMMONS
CALCULATED-DESIGNED BY: ERIC SHADA
CHECKED BY: NOELYN HABANA
REVISED BY
DATE REVISED

P:\PROJ\01\0B540\drafting\sheets\01120001 36ca001.dgn

LAST REVISION 00-00-00
DATE PLOTTED => 16-AUG-2016
TIME PLOTTED => 10:17

Dist	COUNTY	ROUTE	POST MILES TOTAL PROJECT	SHEET No.	TOTAL SHEETS
01	Men	162	13.9,22.7	3	59

REGISTERED CIVIL ENGINEER 06/13/16 DATE

June 13, 2016
PLANS APPROVAL DATE

REGISTERED PROFESSIONAL ENGINEER ERIC D. SHADA No. 82121 Exp. 3-31-18 CIVIL STATE OF CALIFORNIA

THE STATE OF CALIFORNIA OR ITS OFFICERS OR AGENTS SHALL NOT BE RESPONSIBLE FOR THE ACCURACY OR COMPLETENESS OF SCANNED COPIES OF THIS PLAN SHEET.

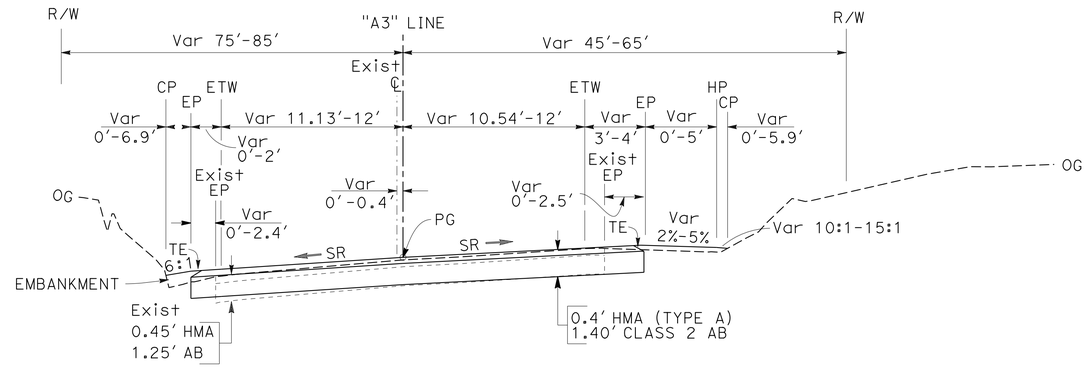

"A3" 303+87.79 TO "A3" 304+75.00

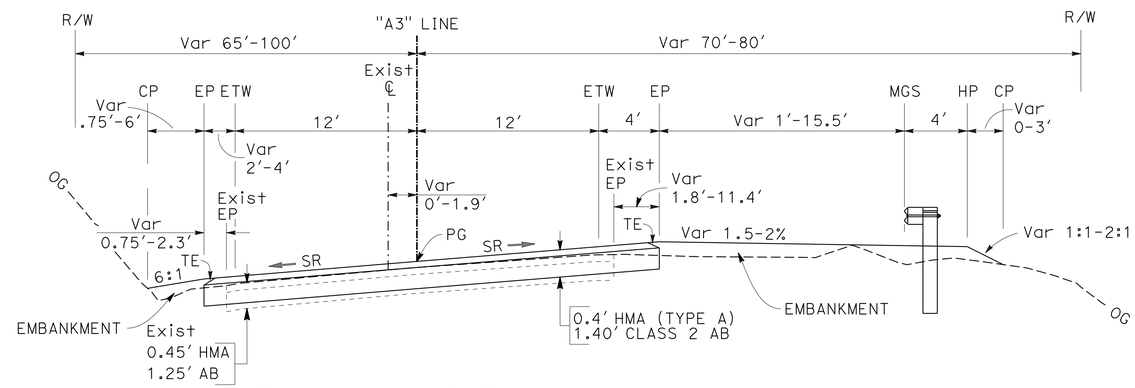

"A3" 303+08.62 TO "A3" 303+87.79

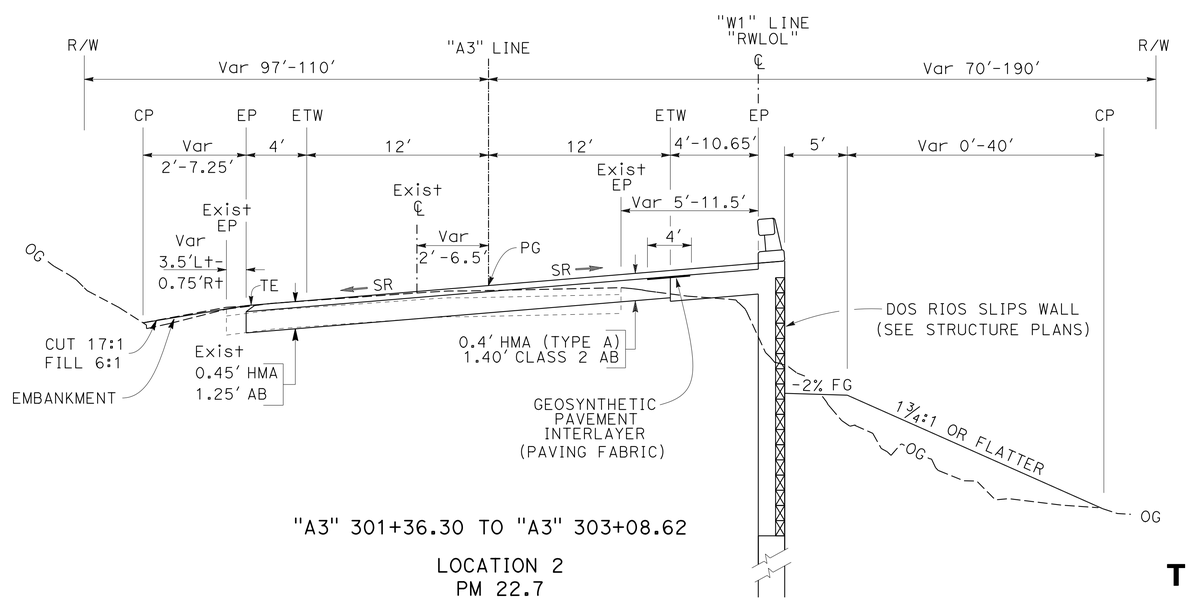

"A3" 301+36.30 TO "A3" 303+08.62

LOCATION 2
PM 22.7
ROUTE 162

TYPICAL CROSS SECTIONS

NO SCALE

X-2

REVISED BY | DATE REVISED
ERIC SHADA | NOELYN HABANA
CALCULATED-DESIGNED BY | CHECKED BY
FUNCTIONAL SUPERVISOR: KELLY B. TIMMONS

STATE OF CALIFORNIA - DEPARTMENT OF TRANSPORTATION
Caltrans® **DESIGN**

P:\PROJ\01\0B540\drafting\sheets\0112000136ca002.dgn

LAST REVISION 00-00-00 | DATE PLOTTED => 16-AUG-2016 | TIME PLOTTED => 10:17

BORDER LAST REVISED 7/2/2010 | USERNAME => s132662 | DGN FILE => 0112000136ca002.dgn | RELATIVE BORDER SCALE IS IN INCHES 0 1 2 3 | UNIT 0312 | PROJECT NUMBER & PHASE 01120001361

Dist	COUNTY	ROUTE	POST MILES TOTAL PROJECT	SHEET No.	TOTAL SHEETS
01	Men	162	13.9,22.7	4	59

REGISTERED CIVIL ENGINEER 06/13/16 DATE

June 13, 2016
PLANS APPROVAL DATE

REGISTERED PROFESSIONAL ENGINEER ERIC D. SHADA No. 82121 Exp. 3-31-18 CIVIL STATE OF CALIFORNIA

THE STATE OF CALIFORNIA OR ITS OFFICERS OR AGENTS SHALL NOT BE RESPONSIBLE FOR THE ACCURACY OR COMPLETENESS OF SCANNED COPIES OF THIS PLAN SHEET.

NOTES:

1. FOR ACCURATE RIGHT OF WAY DATA, CONTACT RIGHT OF WAY ENGINEERING AT THE DISTRICT OFFICE.
2. BASIS OF HORIZONTAL CONTROL IS NAV88.

LEGEND

- DRAINAGE EASEMENT LIMITS
- COLD PLANE AC PAVEMENT
- VEGETATION CONTROL (MINOR CONCRETE)

CURVE DATA

No.	R	Δ	T	L
1	150′	63°39′58"	93.12′	166.68′
2	425′	29°08′35"	110.48′	216.17′

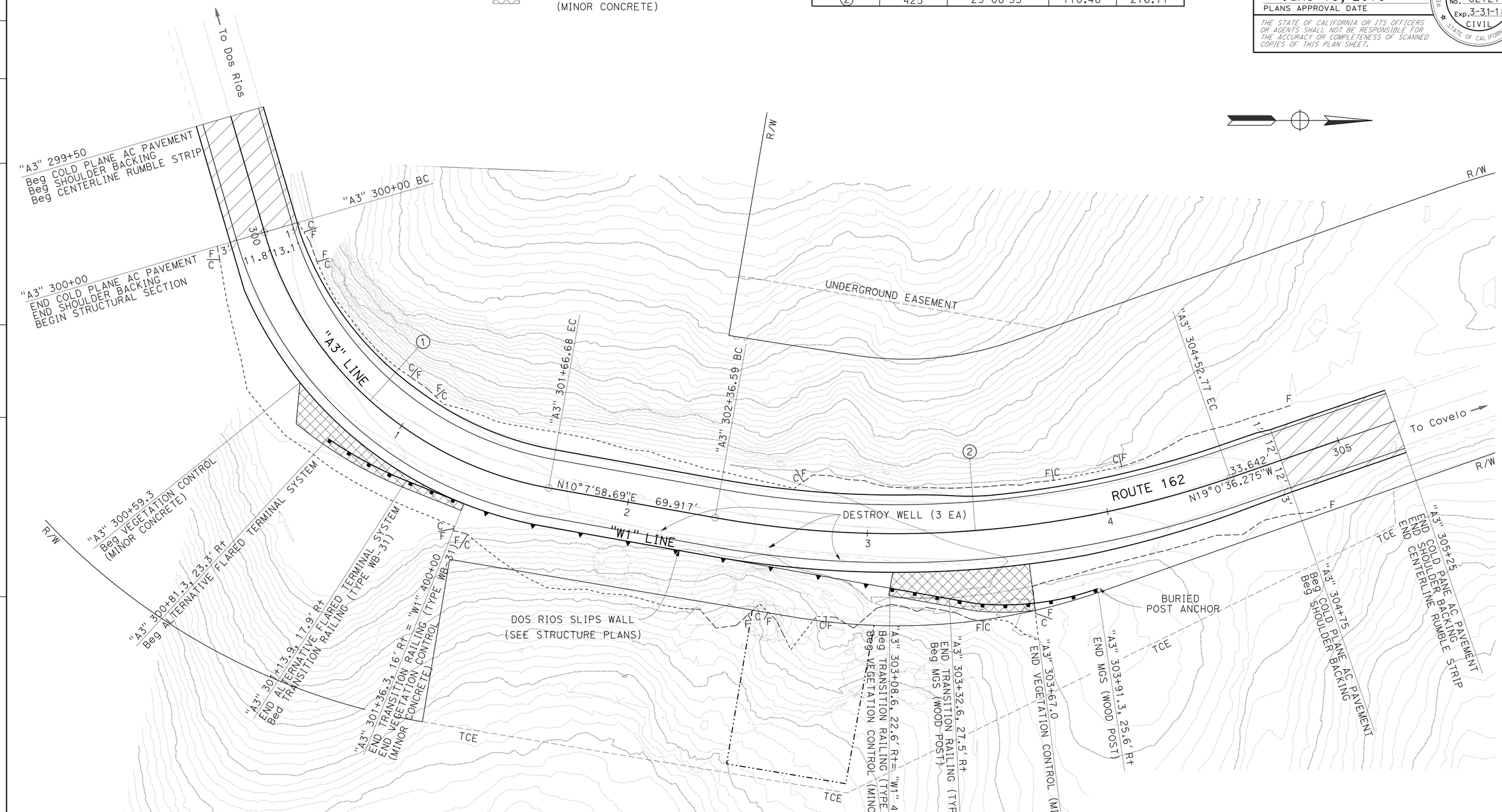

LOCATION 2

PM 22.7

LAYOUT

SCALE: 1" = 20′

L-1

REVISED BY	DATE REVISED
ERIC SHADA	NOELYN HABANA
CALCULATED-DESIGNED BY	CHECKED BY
FUNCTIONAL SUPERVISOR	KELLY B. TIMMONS

STATE OF CALIFORNIA - DEPARTMENT OF TRANSPORTATION

Caltrans

DESIGN

P:\PROJ\01\0B540\drafting\sheets\0112000136ea001.dgn

LAST REVISION 00-00-00 | DATE PLOTTED => 16-AUG-2016 | TIME PLOTTED => 10:17

BORDER LAST REVISED 7/2/2010 | USERNAME => s132662 | DGN FILE => 0112000136ea001.dgn | RELATIVE BORDER SCALE IS IN INCHES 0 1 2 3 | UNIT 0312 | PROJECT NUMBER & PHASE 01120001361

Dist	COUNTY	ROUTE	POST MILES TOTAL PROJECT	SHEET No.	TOTAL SHEETS
01	Men	162	13.9,22.7	5	59

REGISTERED CIVIL ENGINEER 06/13/16 DATE

June 13, 2016
PLANS APPROVAL DATE

REGISTERED PROFESSIONAL ENGINEER ERIC D. SHADA No. 82121 Exp. 3-31-18 CIVIL STATE OF CALIFORNIA

THE STATE OF CALIFORNIA OR ITS OFFICERS OR AGENTS SHALL NOT BE RESPONSIBLE FOR THE ACCURACY OR COMPLETENESS OF SCANNED COPIES OF THIS PLAN SHEET.

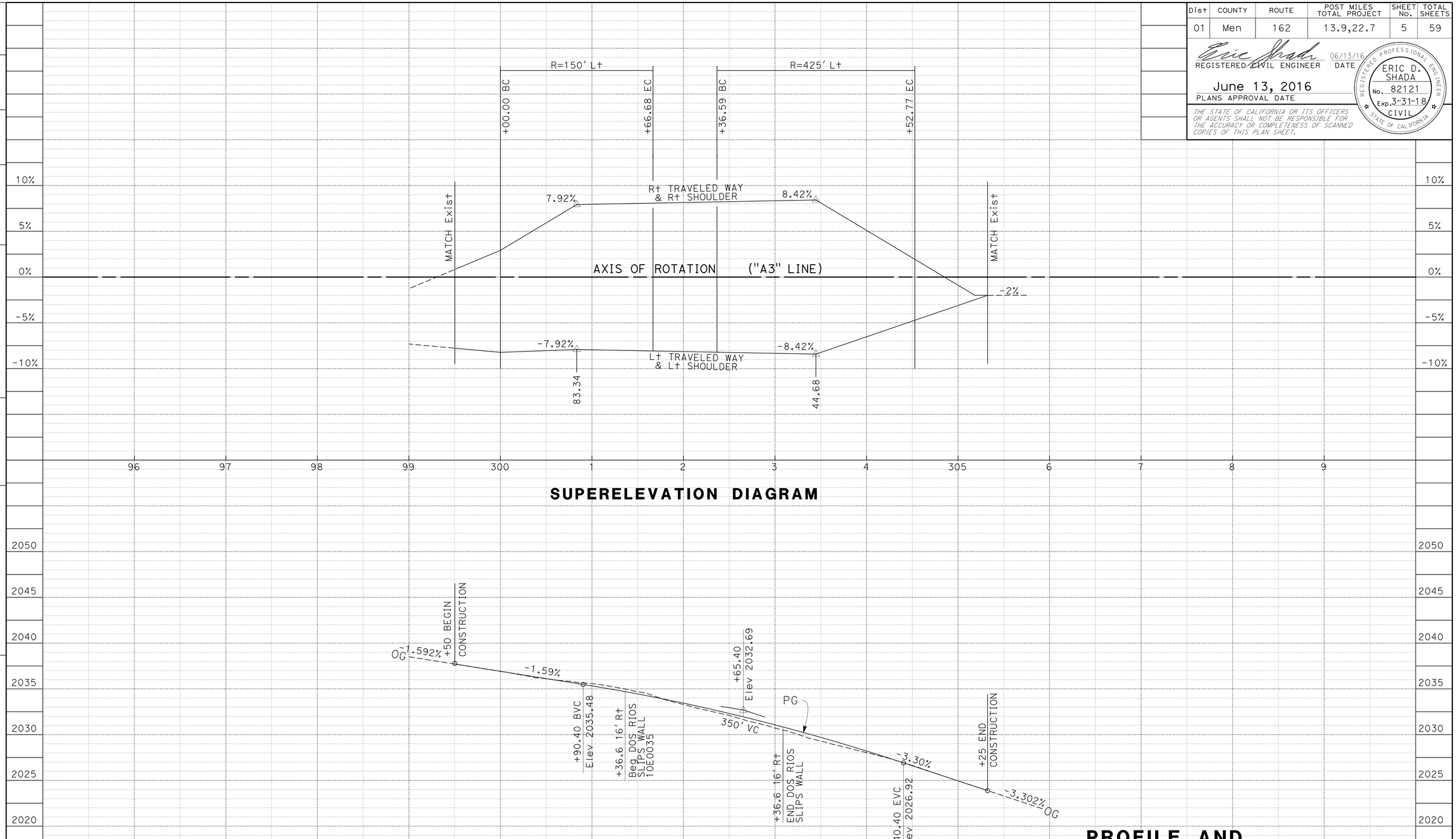

STATION	96	97	98	99	300	1	2	3	4	305	6	7	8	9	TOTAL
CY Exc					299		379		301						979
CY Emb					8		37		54						99

REVISED BY | DATE REVISED

ERIC SHADA | NOELYN HABANA

CALCULATED-DESIGNED BY | CHECKED BY

FUNCTIONAL SUPERVISOR: KELLY B. TIMMONS

STATE OF CALIFORNIA - DEPARTMENT OF TRANSPORTATION

DESIGN

Caltrans

P:\PROJ\01\QB540\drafting\sheets\0112000136fb001.dgn

LAST REVISION 00-00-00 | DATE PLOTTED => 16-AUG-2016 | TIME PLOTTED => 10:17

Dist	COUNTY	ROUTE	POST MILES TOTAL PROJECT	SHEET No.	TOTAL SHEETS
01	Men	162	13.9,22.7	6	59

REGISTERED CIVIL ENGINEER 06/13/16 DATE

June 13, 2016
PLANS APPROVAL DATE

REGISTERED PROFESSIONAL ENGINEER ERIC D. SHADA No. 82121 Exp. 3-31-18 CIVIL STATE OF CALIFORNIA

THE STATE OF CALIFORNIA OR ITS OFFICERS OR AGENTS SHALL NOT BE RESPONSIBLE FOR THE ACCURACY OR COMPLETENESS OF SCANNED COPIES OF THIS PLAN SHEET.

NOTES:

1. GRIND EXISTING SURFACES TO ACCOMODATE A MINIMUM TAPER THICKNESS OF 0.10′ WHEN EITHER:
   A. HMA MATERIAL SUCH AS RUBBERIZED, POLYMER MODIFIED OR OPEN GRADED IS UNSUITABLE FOR RAKING TO A MAXIMUM 0.02′ THICKNESS AT THE CONFORM.
   B. TEMPORARY TAPER WILL BE IN PLACE FOR MORE THAN 14 DAYS.
2. PERMANENT SURFACE MAY BE EXISTING OR NEW PAVEMENT.
3. ROADWAY SURFACE IS THE TOP OF EXISTING SURFACE OR THE TOP OF THE PLANED SURFACE.

LEGEND

HMA MATERIAL (TEMPORARY TAPER)

IF NECESSARY, COLD PLANE ASPHALT CONCRETE PAVEMENT AND PLACE HMA MATERIAL (SEE NOTE 1)

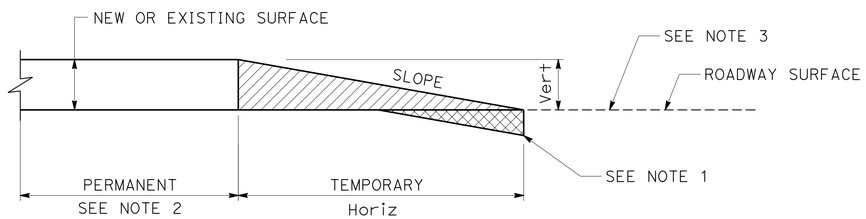

Vert	SLOPE RATIO Horiz/Vert
0-0.10′	70:1
GREATER THAN 0.10′	160:1

TYPICAL PAVING CONFORM FOR TEMPORARY CONSTRUCTION TAPERS

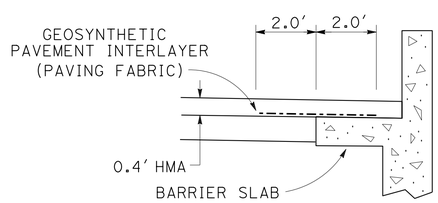

GEOSYNTHETIC PAVEMENT INTERLAYER

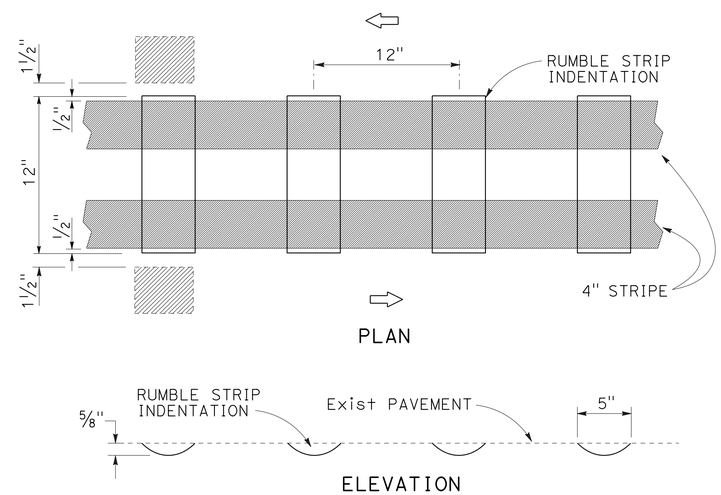

CENTERLINE RUMBLE STRIP

CONSTRUCTION DETAILS

NO SCALE

C-1

STATE OF CALIFORNIA - DEPARTMENT OF TRANSPORTATION
Caltrans
DESIGN

FUNCTIONAL SUPERVISOR: KELLY B. TIMMONS
CALCULATED-DESIGNED BY: ERIC SHADA
CHECKED BY: NOELYN HABANA
REVISED BY
DATE REVISED

P:\PROJ\01\QB540\drafting\sheets\01120001361ga001.dgn

LAST REVISION 00-00-00
DATE PLOTTED => 16-AUG-2016
TIME PLOTTED => 10:17

NOTES:

1. FOR ACCURATE RIGHT OF WAY DATA, CONTACT RIGHT OF WAY ENGINEERING AT THE DISTRICT OFFICE.

Dist	COUNTY	ROUTE	POST MILES TOTAL PROJECT	SHEET No.	TOTAL SHEETS
01	Men	162	13.9,22.7	7	59

REGISTERED CIVIL ENGINEER 06/13/16 DATE

June 13, 2016
PLANS APPROVAL DATE

REGISTERED PROFESSIONAL ENGINEER ERIC D. SHADA No. 82121 Exp. 3-31-18 CIVIL STATE OF CALIFORNIA

THE STATE OF CALIFORNIA OR ITS OFFICERS OR AGENTS SHALL NOT BE RESPONSIBLE FOR THE ACCURACY OR COMPLETENESS OF SCANNED COPIES OF THIS PLAN SHEET.

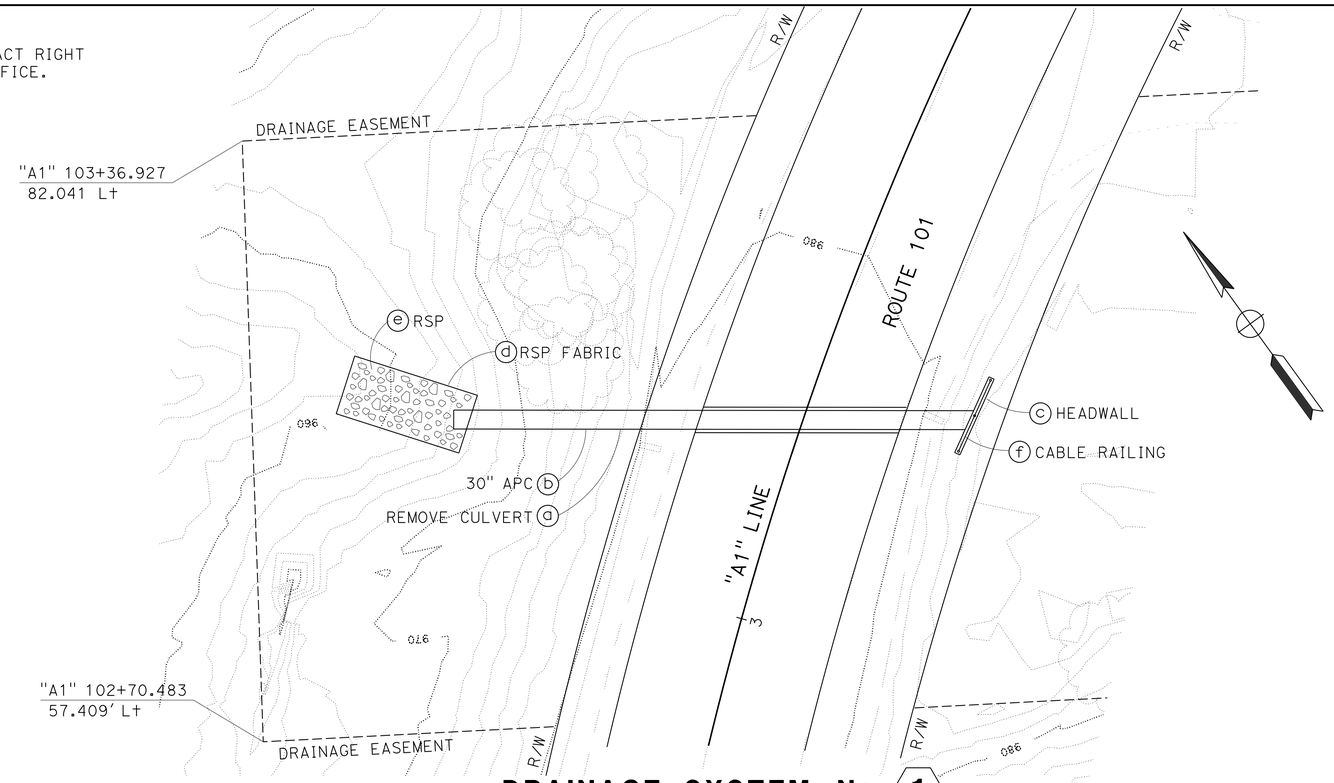

DRAINAGE SYSTEM No. 1

SCALE: 1" = 10'

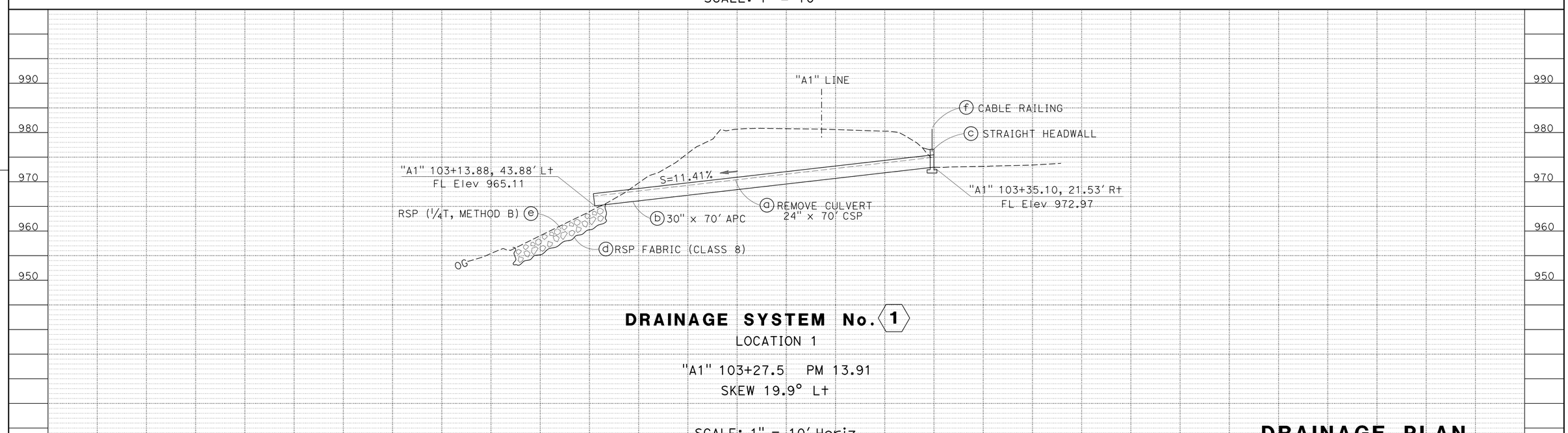

DRAINAGE SYSTEM No. 1

LOCATION 1

"A1" 103+27.5 PM 13.91

SKEW 19.9° Lt

SCALE: 1" = 10' Horiz
1" = 10' Vert

APPROVED FOR DRAINAGE WORK ONLY

DRAINAGE PLAN AND PROFILE

SCALE: AS SHOWN

D-1

REVISED BY | DATE REVISED

ERIC SHADA | NOELYN HABANA

CALCULATED-DESIGNED BY | CHECKED BY

FUNCTIONAL SUPERVISOR: KELLY B. TIMMONS

STATE OF CALIFORNIA - DEPARTMENT OF TRANSPORTATION

DESIGN

Caltrans

P:\PROJ\01\QB540\drafting\sheets\01120001361ia001.dgn

LAST REVISION 00-00-00 | DATE PLOTTED => 16-AUG-2016 | TIME PLOTTED => 10:17

Dist	COUNTY	ROUTE	POST MILES TOTAL PROJECT	SHEET No.	TOTAL SHEETS
01	Men	162	13.9,22.7	8	59

REGISTERED CIVIL ENGINEER 06/13/16 DATE

June 13, 2016
PLANS APPROVAL DATE

ERIC D. SHADA No. 82121 Exp. 3-31-18 CIVIL — REGISTERED PROFESSIONAL ENGINEER — STATE OF CALIFORNIA

THE STATE OF CALIFORNIA OR ITS OFFICERS OR AGENTS SHALL NOT BE RESPONSIBLE FOR THE ACCURACY OR COMPLETENESS OF SCANNED COPIES OF THIS PLAN SHEET.

NOTES:

1. FOR ACCURATE RIGHT OF WAY DATA, CONTACT RIGHT OF WAY ENGINEERING AT THE DISTRICT OFFICE.

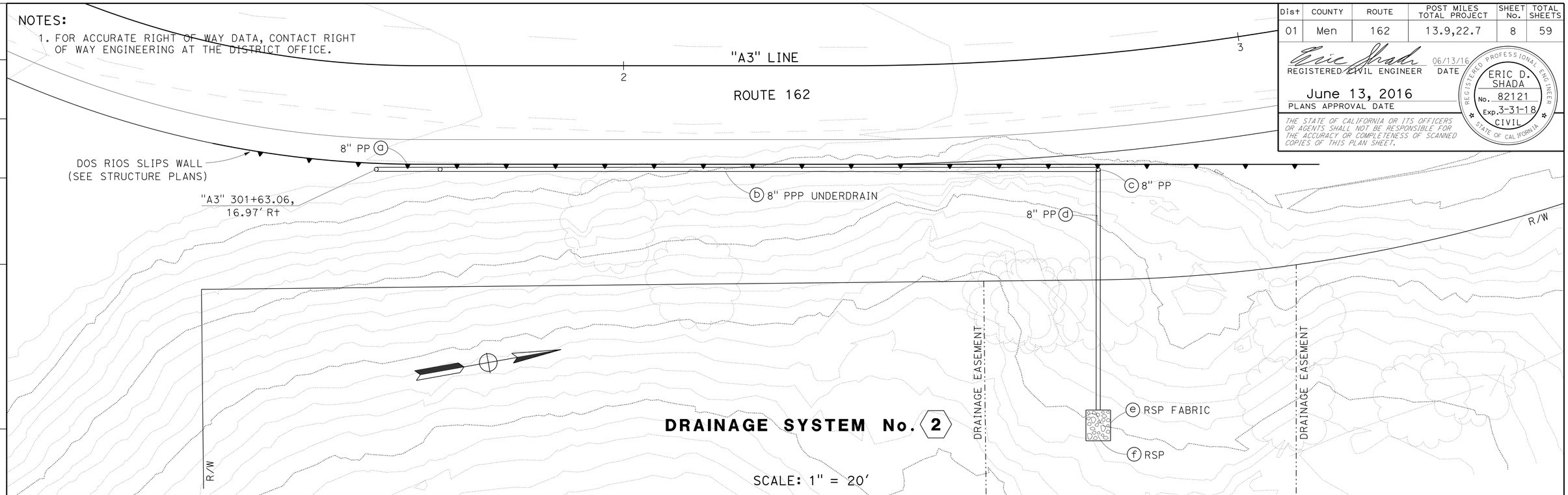

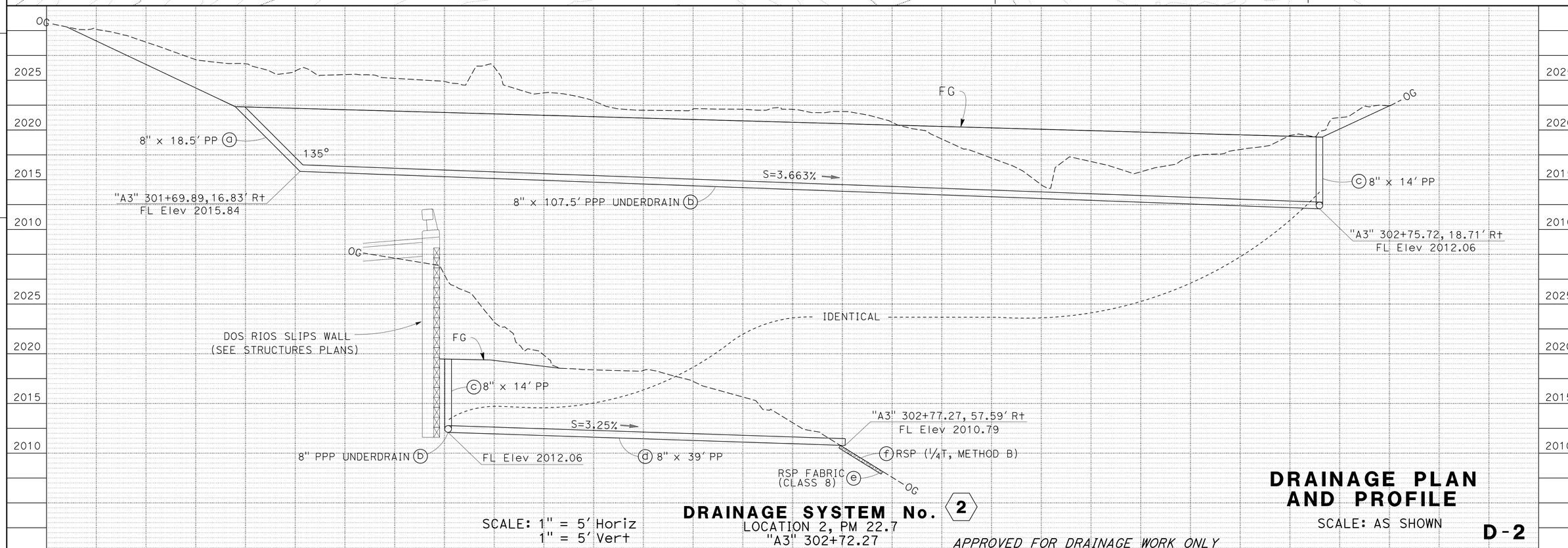

SCALE: 1" = 5' Horiz
1" = 5' Vert

DRAINAGE SYSTEM No. 2
LOCATION 2, PM 22.7
"A3" 302+72.27

APPROVED FOR DRAINAGE WORK ONLY

DRAINAGE PLAN AND PROFILE

SCALE: AS SHOWN

D-2

REVISED BY | DATE REVISED
ERIC SHADA | NOELYN HABANA
CALCULATED-DESIGNED BY | CHECKED BY
FUNCTIONAL SUPERVISOR: KELLY B. TIMMONS

STATE OF CALIFORNIA - DEPARTMENT OF TRANSPORTATION
Caltrans® DESIGN

P:\PROJ\01\0B540\drafting\sheets\01120001361a002.dgn

LAST REVISION 00-00-00 | DATE PLOTTED => 16-AUG-2016 | TIME PLOTTED => 10:17

BORDER LAST REVISED 7/2/2010 | USERNAME => s132662 | DGN FILE => 01120001361a002.dgn | RELATIVE BORDER SCALE IS IN INCHES 0 1 2 3 | UNIT 0312 | PROJECT NUMBER & PHASE 01120001361

Dist	COUNTY	ROUTE	POST MILES TOTAL PROJECT	SHEET No.	TOTAL SHEETS
01	Men	162	13.9,22.7	9	59

REGISTERED CIVIL ENGINEER 06/13/16 DATE

June 13, 2016
PLANS APPROVAL DATE

REGISTERED PROFESSIONAL ENGINEER ERIC D. SHADA No. 82121 Exp. 3-31-18 CIVIL STATE OF CALIFORNIA

THE STATE OF CALIFORNIA OR ITS OFFICERS OR AGENTS SHALL NOT BE RESPONSIBLE FOR THE ACCURACY OR COMPLETENESS OF SCANNED COPIES OF THIS PLAN SHEET.

DRAINAGE SYSTEM	DRAINAGE UNIT	L	W	T
2	f	17′	8′	3.4′
1	e	12′	6′	3.4′

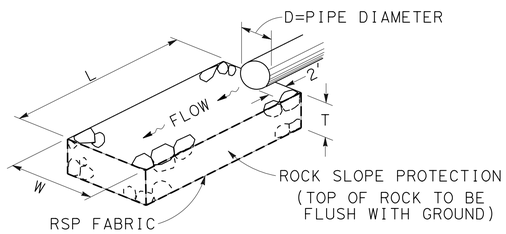

ROCK ENERGY DISSIPATOR AT DRAINAGE OUTLET

ALTERNATIVE PIPE CULVERTS ALLOWABLE PIPE MATERIAL AND PROTECTION

DESIGNATION	CSP				HDPE
	POLYMERIC SHEET COATED		NON POLYMERIC SHEET COATED		TYPE S
	14 GAGE	12 GAGE	12 GAGE	10 GAGE	
1 b	YES		YES		YES

DRAINAGE

DRAINAGE SYSTEM	DRAINAGE UNIT	REMOVE CULVERT (EA)	30" ALTERNATIVE PIPE CULVERT	8" PERFORATED PLASTIC PIPE UNDERDRAIN	8" PLASTIC PIPE	MINOR CONCRETE (MINOR STRUCTURE)	ROCK SLOPE PROTECTION FABRIC (CLASS 8)	ROCK SLOPE PROTECTION (1/4T, METHOD B) (CY)	CABLE RAILING	DRAINAGE UNIT	DRAINAGE SYSTEM	REMARKS
		EA	LF	LF	LF	CY	SQYD	CY	LF			
1	a	1								a	1	24" x 70" CSP
	b		70							b		POSITIVE JOINT
	c					1.52				c		STRAIGHT WALL
	d						39			d		
	e							17		e		
	f								10	f		
2	a				18.5					a	2	RISER
	b			121						b		
	c				14					c		RISER
	d				39					d		
	e						27			e		
	f							9		f		
TOTAL		1	70	121	71.5	1.52	66	26	10			

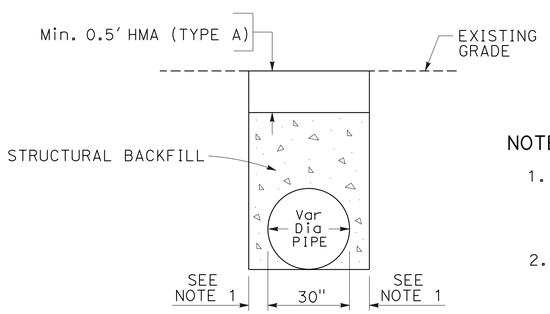

CULVERT BACKFILL DETAIL

NOTES:

1. SLURRY CEMENT BACKFILL TRENCH WIDTH SHALL ALLOW 0.5′ Min CLEARANCE BETWEEN EXCAVATION AND SIDES OF PIPES.
2. SEE Std PLAN A62F FOR EXCAVATION AND BACKFILL DETAILS.

DRAINAGE DETAILS AND QUANTITIES

NO SCALE

DD-1

REVISED BY	DATE REVISED
ERIC SHADA	NOELYN HABANA
CALCULATED-DESIGNED BY	CHECKED BY
FUNCTIONAL SUPERVISOR	KELLY B. TIMMONS

STATE OF CALIFORNIA - DEPARTMENT OF TRANSPORTATION
Caltrans
DESIGN

P:\PROJ\01\0B540\drafting\sheets\01120001361c001.dgn

LAST REVISION 00-00-00 DATE PLOTTED => 16-AUG-2016 TIME PLOTTED => 10:18

NOTES:

1. EXACT SIGN LOCATION TO BE DETERMINED BY THE ENGINEER.
2. EXISTING UTILITY FACILITIES HAVE NOT BEEN PLOTTED ON THESE PLANS.
3. SEE SHEET TH-1 FOR LOCATION OF SIGNS E, F, G & H.

Dist	COUNTY	ROUTE	POST MILES TOTAL PROJECT	SHEET No.	TOTAL SHEETS
01	Men	162	13.9,22.7	10	58

Sheri M. Rodriguez 06/13/16
REGISTERED CIVIL ENGINEER DATE

June 13, 2016
PLANS APPROVAL DATE

REGISTERED PROFESSIONAL ENGINEER SHERI M. RODRIGUEZ No. C66861 Exp 9-30-16 CIVIL STATE OF CALIFORNIA

THE STATE OF CALIFORNIA OR ITS OFFICERS OR AGENTS SHALL NOT BE RESPONSIBLE FOR THE ACCURACY OR COMPLETENESS OF SCANNED COPIES OF THIS PLAN SHEET.

STATIONARY MOUNTED CONSTRUCTION AREA SIGNS

◯	TYPE	SIGN MESSAGE	PANEL SIZE	No. OF POSTS AND SIZE	No. OF SIGNS
A	C40(CA)	TRAFFIC FINES DOUBLED IN CONSTRUCTION ZONE	108" x 42"	2 - 6" x 6"	4
B	W20-1	ROAD WORK AHEAD	36" x 36"	*	2
C	W11-1	BICYCLE SYMBOL	36" x 36"	1 - 4" x 6"	2
	W16-1	SHARE THE ROAD	24" x 30"		
D	R4-11	BIKES MAY USE FULL LANE	30" x 30"	1 - 4" x 6"	2
E	W20-4	ONE LANE ROAD AHEAD	36" x 36"	*	2
F	W3-3	SIGNAL AHEAD SYMBOL	36" x 36"	*	2
G	R10-6	STOP HERE ON RED	24" x 36"	1 - 4" x 6"	2
H	W1-4	REVERSE CURVE SIGN	36" x 36"	1 - 4" x 6"	1
I	G20-2	END ROAD WORK	36" x 36"	1 - 4" x 6"	4
J	W20-1	ROAD WORK AHEAD	36" x 36"	1 - 4" x 6"	2

* PLACE SIGNS ON POLE WITH FLASHING BEACON (SEE ELECTRICAL PLANS).

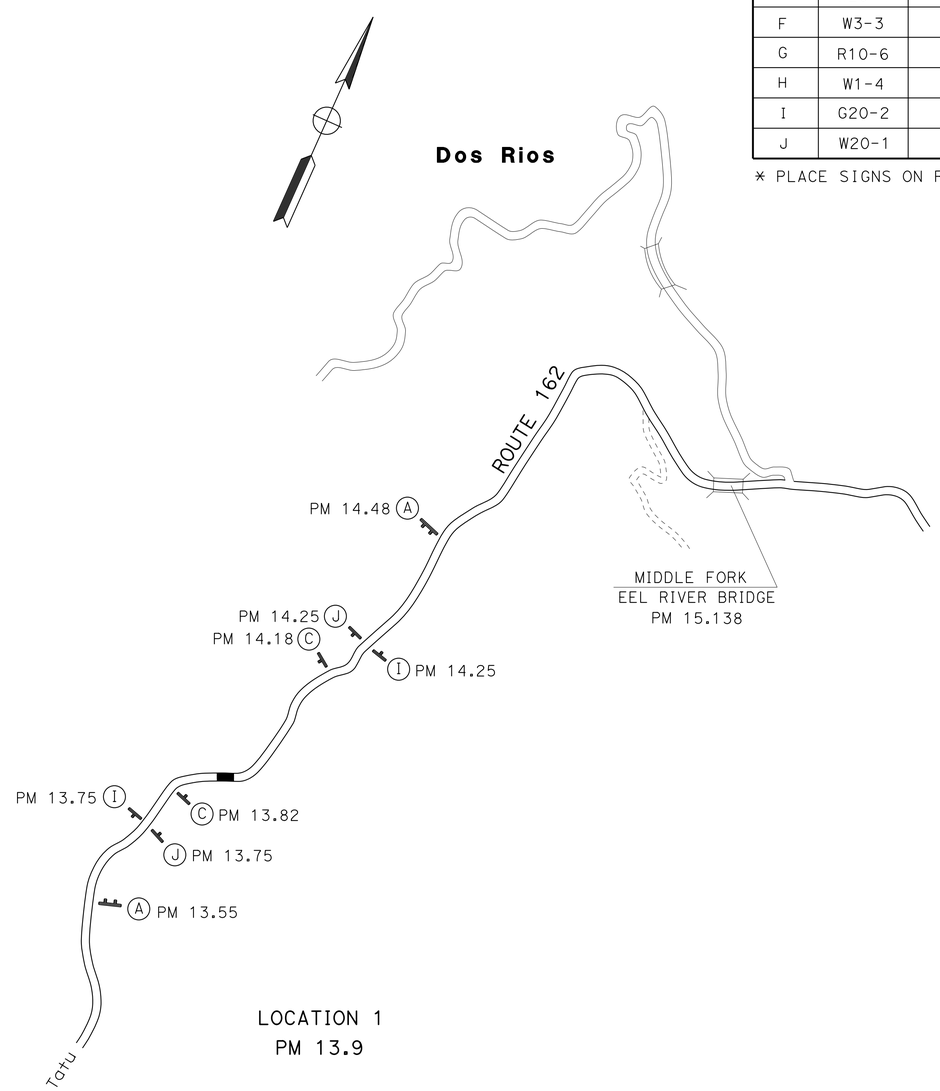

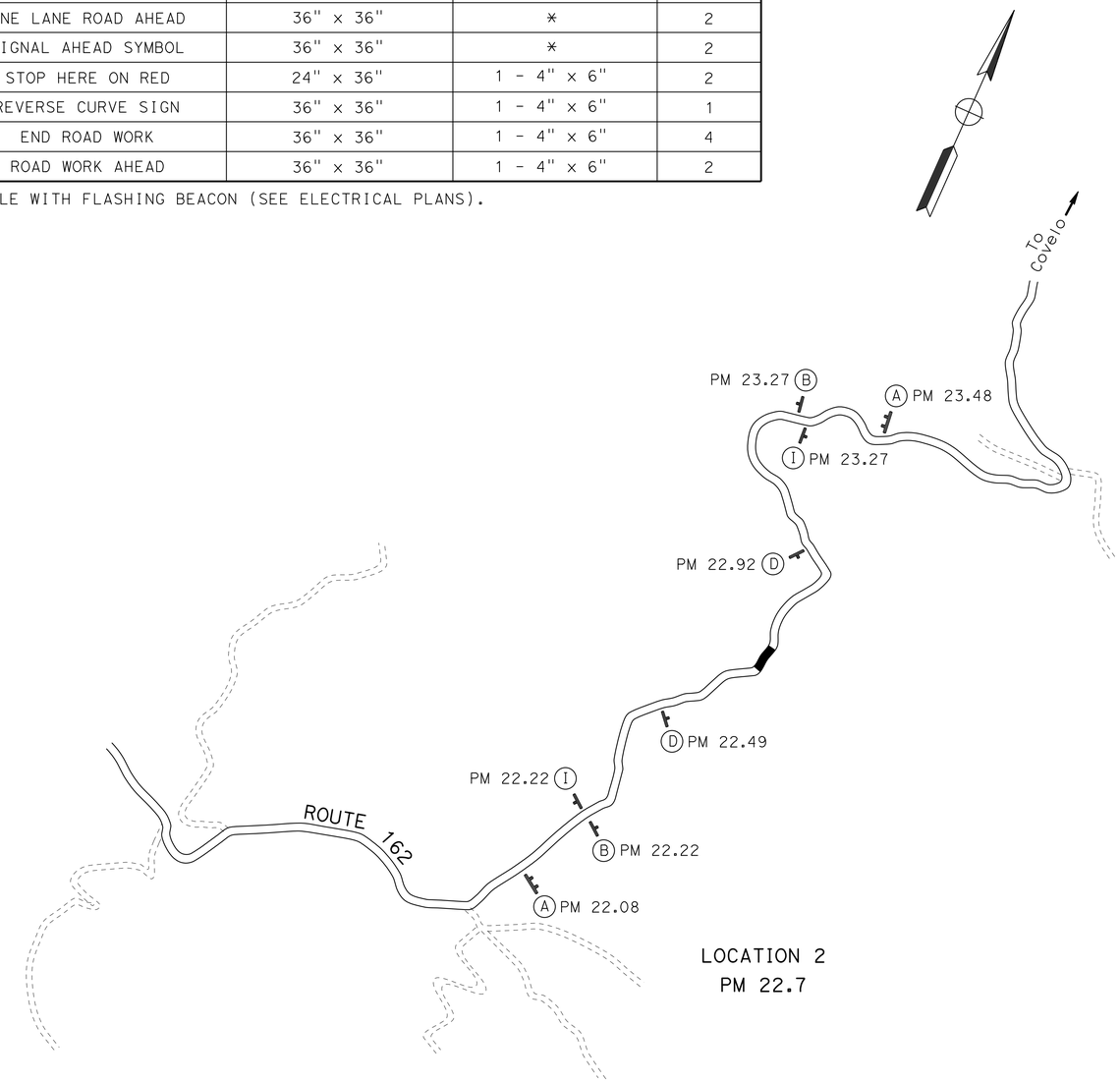

CONSTRUCTION AREA SIGNS

NO SCALE

CS-1

APPROVED FOR CONSTRUCTION AREA SIGN WORK ONLY

REVISED BY | DATE REVISED
SHERI M. RODRIGUEZ | PAUL HAILEY
CALCULATED-DESIGNED BY | CHECKED BY
FUNCTIONAL SUPERVISOR | KEVIN CHURCH
STATE OF CALIFORNIA - DEPARTMENT OF TRANSPORTATION
Caltrans® TRAFFIC OPERATIONS

P:\PROJ\01\0B540\drafting\sheets\01120001361a001.dgn

LAST REVISION 00-00-00 | DATE PLOTTED => 16-AUG-2016 | TIME PLOTTED => 10:18

BORDER LAST REVISED 7/2/2010 | USERNAME => s132662 | DGN FILE => 01120001361a001.dgn | RELATIVE BORDER SCALE IS IN INCHES 0 1 2 3 | UNIT 0042 | PROJECT NUMBER & PHASE 01120001361

Dist	COUNTY	ROUTE	POST MILES TOTAL PROJECT	SHEET No.	TOTAL SHEETS
01	Men	162	13.9,22.7	11	58

Sheri M. Rodriguez 06/13/16
REGISTERED CIVIL ENGINEER DATE

June 13, 2016
PLANS APPROVAL DATE

REGISTERED PROFESSIONAL ENGINEER SHERI M. RODRIGUEZ No. C66861 Exp. 9-30-16 CIVIL STATE OF CALIFORNIA

THE STATE OF CALIFORNIA OR ITS OFFICERS OR AGENTS SHALL NOT BE RESPONSIBLE FOR THE ACCURACY OR COMPLETENESS OF SCANNED COPIES OF THIS PLAN SHEET.

NOTES:

1. EXACT SIGN LOCATIONS TO BE DETERMINED BY THE ENGINEER.
2. EQUIPMENT REQUIRED FOR THE TEMPORARY PORTABLE SIGNAL SYSTEM MUST BE PROTECTED OR 15′ MINIMUM FROM ETW.
3. FOR ACCURATE RIGHT OF WAY DATA, CONTACT RIGHT OF WAY ENGINEERING AT THE DISTRICT OFFICE.

LEGEND

- CHANNELIZER (SURFACE MOUNTED)
- (X) CONSTRUCTION AREA SIGN (SEE SHEET CS-1)
- DIRECTION OF TRAFFIC
- FLASHING BEACON (SEE ELECTRICAL PLANS)

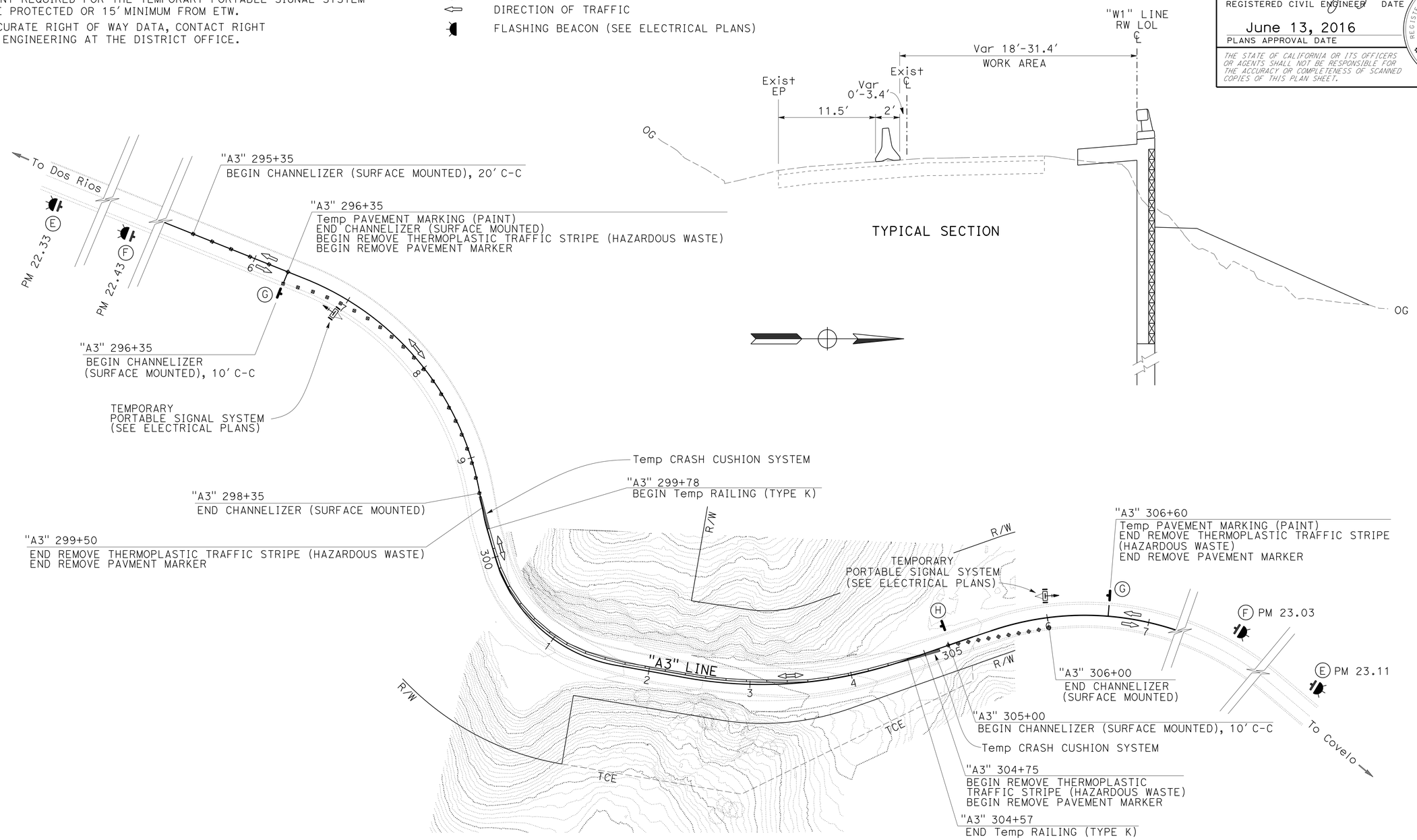

LOCATION 2
PM 22.7

TRAFFIC HANDLING PLAN

SCALE: 1" = 50′

TH-1

REVISED BY	DATE REVISED

CALCULATED-DESIGNED BY	SHERI M. RODRIGUEZ
CHECKED BY	PAUL HAILEY
FUNCTIONAL SUPERVISOR	KEVIN CHURCH

STATE OF CALIFORNIA - DEPARTMENT OF TRANSPORTATION
Caltrans® TRAFFIC OPERATIONS

P:\PROJ\01\0B540\drafting\sheets\0112000136md001.dgn

LAST REVISION 00-00-00 | DATE PLOTTED => 16-AUG-2016 | TIME PLOTTED => 10:18

Dist	COUNTY	ROUTE	POST MILES TOTAL PROJECT	SHEET No.	TOTAL SHEETS
01	Men	162	13.9,22.7	12	58

REGISTERED CIVIL ENGINEER 5-18-16 DATE

June 13, 2016
PLANS APPROVAL DATE

REGISTERED PROFESSIONAL ENGINEER SCOTT LEZCHUK No. C79030 Exp. 3-31-18 CIVIL STATE OF CALIFORNIA

THE STATE OF CALIFORNIA OR ITS OFFICERS OR AGENTS SHALL NOT BE RESPONSIBLE FOR THE ACCURACY OR COMPLETENESS OF SCANNED COPIES OF THIS PLAN SHEET.

NOTES:

See Revised Standard Plan T9 for tables.

Use cone spacing X for taper segment, Y for tangent segment or Z for conflict situations, as appropriate, per Table 1, unless X, Y, or Z cone spacing is shown on this sheet.

All temporary warning signs shall have black legend on fluorescent orange background.

California codes are designated by (CA). Otherwise, Federal (MUTCD) codes are shown.

TYPICAL LANE CLOSURE WITH REVERSIBLE CONTROL

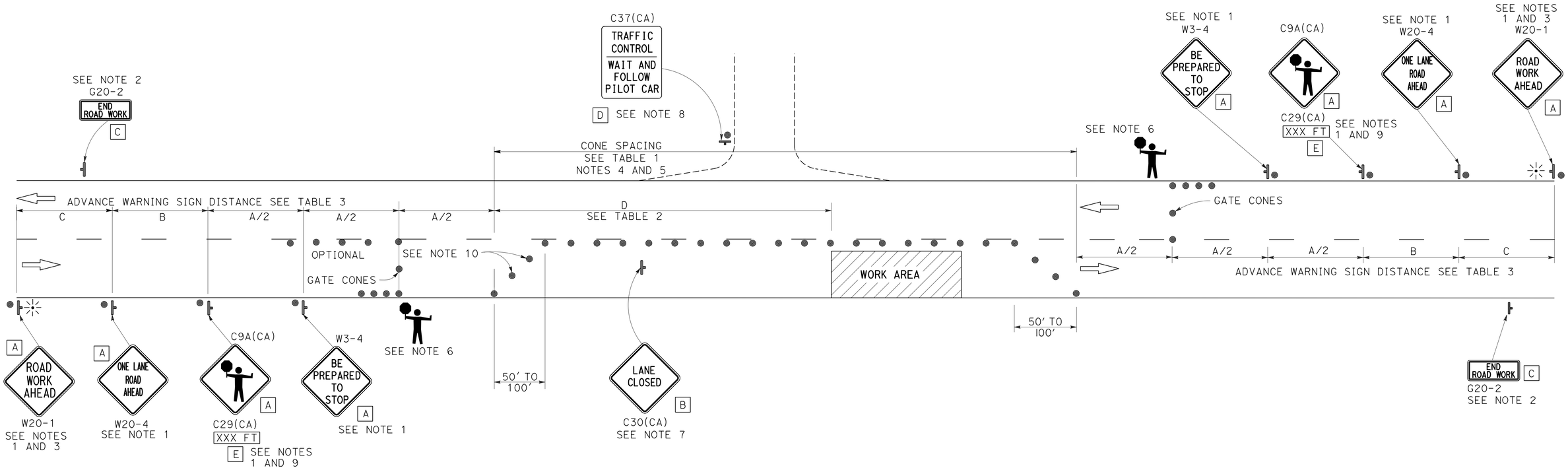

NOTES:

1. Each advance warning sign in each direction of travel shall be equipped with at least two flags for daytime closure. Each flag shall be at least 16" x 16" in size and shall be orange or fluorescent red-orange in color. Flashing beacons shall be placed at the locations indicated for lane closure during hours of darkness.
2. A G20-2 "END ROAD WORK" sign, as appropriate, shall be placed at the end of the lane control unless the end of work area is obvious, or ends within a larger project's limits.
3. If the W20-1 sign would follow within 2000' of a stationary W20-1 or G20-1 "ROAD WORK NEXT _____ MILES", use a W20-4 sign for the first advance warning sign.
4. All cones used for lane closures during the hours of darkness shall be fitted with retroreflective bands (or sleeves) as specified in the specifications.
5. Portable delineators, placed at one-half the spacing indicated for traffic cones, may be used instead of cones for daytime closures only.
6. Additional advance flaggers may be required. Flagger should stand in a conspicuous place, be visible to approaching traffic as well as approaching vehicles after the first vehicle has stopped. During the hours of darkness, the flagging-station and flagger shall be illuminated and clearly visible to approaching traffic. The illumination footprint of the lighting on the ground shall be at least 20' in diameter. Place a minimum of four cones at 50' intervals in advance of flagger station as shown.
7. Place C30(CA) "LANE CLOSED" sign at 500' to 1000' intervals throughout extended work areas. They are optional if the work area is visible from the flagger station.
8. When a pilot car is used, place a C37(CA) "TRAFFIC CONTROL-WAIT AND FOLLOW PILOT CAR" sign with black legend on white background at all intersections, driveways and alleys without a flagger within traffic control area. Signs shall be clean and visible at all times. Where traffic can not be effectively self-regulated, at least one flagger shall be used at each intersection within traffic control area.
9. An optional C29(CA) sign may be placed below the C9A(CA) sign.
10. Either traffic cones or barricades shall be placed on the taper. Barricades shall be Type I, II, or III.

SIGN PANEL SIZE (Min)

A	48" x 48"
B	30" x 30"
C	36" x 18"
D	36" x 42"
E	20" x 7"

LEGEND

- TRAFFIC CONE
- TEMPORARY TRAFFIC CONTROL SIGN
- PORTABLE FLASHING BEACON
- FLAGGER

APPROVED FOR TRAFFIC HANDLING WORK ONLY

STATE OF CALIFORNIA
DEPARTMENT OF TRANSPORTATION

TRAFFIC CONTROL SYSTEM FOR LANE CLOSURE ON TWO LANE CONVENTIONAL HIGHWAYS

NO SCALE

TH-2

REVISED BY | DATE REVISED
SCOTT LEZCHUK | PAUL HAILEY
CALCULATED-DESIGNED BY | CHECKED BY
FUNCTIONAL SUPERVISOR: KEVIN CHURCH

STATE OF CALIFORNIA - DEPARTMENT OF TRANSPORTATION
Caltrans® TRAFFIC OPERATIONS

P:\PROJ\01\0B540\drafting\sheets\011200136md002.dgn

LAST REVISION 00-00-00 | DATE PLOTTED => 16-AUG-2016 | TIME PLOTTED => 10:18

Dist	COUNTY	ROUTE	POST MILES TOTAL PROJECT	SHEET No.	TOTAL SHEETS
01	Men	162	13.9,22.7	13	59

REGISTERED CIVIL ENGINEER 06/13/16 DATE

June 13, 2016
PLANS APPROVAL DATE

REGISTERED PROFESSIONAL ENGINEER ERIC D. SHADA No. 82121 Exp. 3-31-18 CIVIL STATE OF CALIFORNIA

THE STATE OF CALIFORNIA OR ITS OFFICERS OR AGENTS SHALL NOT BE RESPONSIBLE FOR THE ACCURACY OR COMPLETENESS OF SCANNED COPIES OF THIS PLAN SHEET.

LEGEND

No. PAVEMENT DELINEATION DETAIL NUMBER

Beg/END STRIPE DETAIL

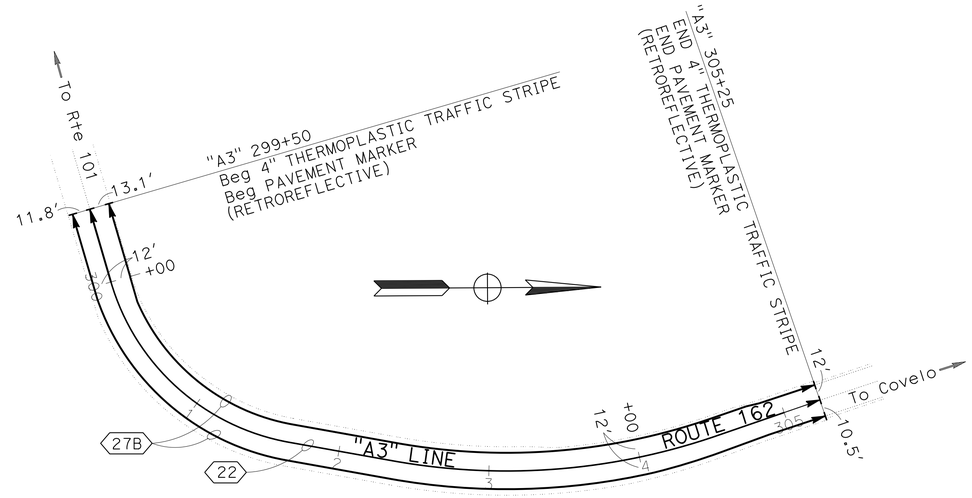

LOCATION 2
PM 22.7

PAVEMENT DELINEATION PLAN

SCALE: 1" = 50'

PD-1

APPROVED FOR PAVEMENT DELINEATION WORK ONLY

REVISED BY | DATE REVISED

ERIC SHADA | NOELYN HABANA

CALCULATED-DESIGNED BY | CHECKED BY

FUNCTIONAL SUPERVISOR: KELLY B. TIMMONS

STATE OF CALIFORNIA - DEPARTMENT OF TRANSPORTATION

Caltrans® DESIGN

P:\PROJ\01\0B540\drafting\sheets\0112000136na001.dgn

LAST REVISION 00-00-00 | DATE PLOTTED => 16-AUG-2016 | TIME PLOTTED => 10:18

NOTE: (N) - NOT A SEPARATE PAY ITEM. FOR INFORMATION ONLY.

Dist	COUNTY	ROUTE	POST MILES TOTAL PROJECT	SHEET No.	TOTAL SHEETS
01	Men	162	13.9,22.7	14	59

REGISTERED CIVIL ENGINEER 06/13/16 DATE

June 13, 2016
PLANS APPROVAL DATE

REGISTERED PROFESSIONAL ENGINEER ERIC D. SHADA No. 82121 Exp. 3-31-18 CIVIL STATE OF CALIFORNIA

THE STATE OF CALIFORNIA OR ITS OFFICERS OR AGENTS SHALL NOT BE RESPONSIBLE FOR THE ACCURACY OR COMPLETENESS OF SCANNED COPIES OF THIS PLAN SHEET.

DESTROY WELL

LOCATION	DESTROY WELL
	EA
"A3" 302+15, 10' R†	1
"A3" 302+60, 10' R†	1
"A3" 302+70, 12' R†	1
TOTAL	3

TRAFFIC HANDLING

LOCATION		REMOVE YELLOW THERMOPLASTIC TRAFFIC STRIPE (HAZARDOUS WASTE)	CHANNELIZER (SURFACE MOUNTED)	TEMP RAILING (TYPE K)	TEMP PAVEMENT MARKING (PAINT)	TEMP CRASH CUSHION SYSTEM	REMOVE PAVEMENT MARKER	REMARKS
FROM	TO	LF	EA	LF	SQFT	EA	EA	
"A3" 295+35	"A3" 296+35		6					
"A3" 296+35					12			LIMIT LINE
"A3" 296+35	"A3" 298+35		21					
"A3" 296+35	"A3" 299+50	630					30	
"A3" 299+78						1		
"A3" 299+78	"A3" 304+57			480				
"A3" 304+57						1		
"A3" 304+75	"A3" 306+60	370					18	
"A3" 305+00	"A3" 306+00		11					
"A3" 306+60					12			LIMIT LINE
TOTAL		1000	38	480	24	2	48	

TEMPORARY BMP

LOCATION		Temp HYDRAULIC MULCH (BONDED FIBER MATRIX)	Temp COVER	Temp CHECK DAM	Temp FIBER ROLL	Temp REINFORCED SILT FENCE	Temp SILT FENCE
FROM	TO	SQYD	SQYD	LF	LF	LF	LF
"A1" 103+27.5, L†					30		10
"A3" 303+75	"A3" 303+50				25		
"A3" 303+20	"A3" 303+67				25		
"A3" 303+75	"A3" 304+75				100		
"A3" 301+36, R†	"A3" 303+09, R†	800	800	190	100	180	
"A3" 303+00	"A3" 304+00						100
TOTAL		800	800	190	280	180	110

GUARDRAILING

LOCATION		ALTERNATIVE FLARED TERMINAL SYSTEM	TRANSISTION RAILING (TYPE WB-31)	MIDWEST GUARDRAIL SYSTEM (WOOD POST)	BURIED POST ANCHOR (N)	VEGETATION CONTROL (MINOR CONCRETE)
FROM	TO	EA	EA	LF	EA	SQYD
"A3" 300+59.3	"A3" 301+36.3					101
"A3" 300+81.3	"A3" 301+13.9	1				
"A3" 301+13.9	"A3" 301+36.3		1			
"A3" 303+08.6	"A3" 303+32.6		1			
"A3" 303+08.6	"A3" 303+67.0					67
"A3" 303+32.6	"A3" 303+91.3			62.5		
"A3" 303+91.3					1	
TOTAL		1	2	62.5	1	168

ROADWAY

LOCATION		CLASS 2 AGGREGRATE BASE (CY)	HOT MIX ASPHALT (TYPE A)	GEOSYNTHETIC PAVEMENT INTERLAYER (PAVING FABRIC)	ASPHALT BINDER (GEOSYNTHETIC PAVEMENT INTERLAYER)	COLD PLANE AC PAVEMENT	SHOULDER BACKING	ROADWAY EXCAVATION	EMBANKMENT (N)	CENTERLINE RUMBLE STRIP	TACK COAT
FROM	TO	CY	TON	SQYD	TON	SQYD	TON	CY	CY	STA	TON
"A3" 299+50	"A3" 305+25									6	
"A3" 299+50	"A3" 300+00		22			161	12				.04
"A3" 300+00	"A3" 301+36.3	327	133					299	8		.10
"A3" 301+36.6	"A3" 303+08.6	428	182	80	0.1			379	29		.13
"A3" 303+08.6	"A3" 304+75	406	159					301	54		.12
"A3" 304+75	"A3" 305+25		21			156	12				.04
TOTAL		1161	517	80	0.1	317	24	979	91	6	.43

PAVEMENT DELINEATION

LOCATION		R†/ L†/ CL	DETAIL LENGTH (N)	DETAIL	4" THERMOPLASTIC TRAFFIC STRIPE		PAVEMENT MARKER (RETROREFLECTIVE)
					YELLOW	WHITE	
FROM	TO		LF		LF	LF	EA
"A1" 103+17	"A1" 103+37	R†	20	27B		20	
"A1" 103+17	"A1" 103+37	L†	20	27B		20	
"A1" 103+17	"A1" 103+37	CL	20	22	40		
"A3" 299+50	"A3" 305+25	R†	575	27B		575	
"A3" 299+50	"A3" 305+25	L†	575	27B		575	
"A3" 296+35	"A3" 306+60	CL	1025	22	1150		88
				SUBTOTAL	1190	1190	88
				TOTAL	2380		88

SUMMARY OF QUANTITIES

Q-1

REVISED BY | DATE REVISED
ERIC SHADA | NOELYN HABANA
CALCULATED-DESIGNED BY | CHECKED BY
FUNCTIONAL SUPERVISOR: KELLY B. TIMMONS

STATE OF CALIFORNIA - DEPARTMENT OF TRANSPORTATION
Caltrans DESIGN

P:\PROJ\01\0B540\drafting\sheets\0112000136pa001.dgn

LAST REVISION 00-00-00 | DATE PLOTTED => 16-AUG-2016 | TIME PLOTTED => 10:18

Dist	COUNTY	ROUTE	POST MILES TOTAL PROJECT	SHEET No.	TOTAL SHEETS
01	Men	162	13.9,22.7	15	59

Laura Lazzarotto
LICENSED LANDSCAPE ARCHITECT

June 13, 2016
PLANS APPROVAL DATE

LICENSED LANDSCAPE ARCHITECT
Laura Lazzarotto-LA 4062
Signature
8-31-17
Renewal Date
06/13/16
Date
STATE OF CALIFORNIA

THE STATE OF CALIFORNIA OR ITS OFFICERS OR AGENTS SHALL NOT BE RESPONSIBLE FOR THE ACCURACY OR COMPLETENESS OF SCANNED COPIES OF THIS PLAN SHEET.

COMPOST SOCK

SEQUENCE	ITEM	MATERIAL		REMARKS
		DESCRIPTION	TYPE	
COMPOST SOCK MUST BE INSTALLED BEFORE EROSION CONTROL	COMPOST SOCK	MESH TUBE	TYPE 2 INSTALLATION	8" Dia BURLAP

EROSION CONTROL TYPE 2

SEQUENCE	ITEM	MATERIAL		APPLICATION RATE	REMARKS
		DESCRIPTION	TYPE		
STEP 1	BONDED FIBER MATRIX	SEED	SEED MIX 1	169 LB/ACRE	
		FIBER		1000 LB/ACRE	APPLICATION RATE IS FOR FIBER & TACKIFIER COMBINED
		TACKIFIER			
STEP 2	BONDED FIBER MATRIX	FIBER		3500 LB/ACRE	
		TACKIFIER			

EROSION CONTROL TYPE 3

SEQUENCE	ITEM	MATERIAL		APPLICATION RATE	DEPTH
		DESCRIPTION	TYPE		
STEP 1	WOOD MULCH	MULCH	WOOD CHIPS	270 CY/ACRE	2"

SEED MIX 1

SEED	BOTANICAL NAME (COMMON NAME)	PERCENT GERMINATION (MINIMUM)	POUNDS PURE LIVE SEED PER ACRE (SLOPE MEASUREMENT)
MIX 1	ACHILLEA MILLEFOLIUM [1] (WHITE YARROW)	45	2
	BROMUS CARINATUS [1] (CALIFORNIA BROME)	85	20
	ELYMUS ELYMOIDES [1] (BOTTLE BRUSH SQUIRRELTAIL)	55	10
	ELYMUS GLAUCUS 'BERKELEY' [1] (BLUE WILDRYE, BERKELEY)	65	25
	FESTUCA CALIFORNICA [1] (CALIFORNIA FESCUE)	75	10
	FESTUCA IDAHOENSIS [1] (IDAHO FESCUE)	80	12
	HORDEUM VULGARE (COMMON BARLEY)	75	90

[1] SEED PRODUCED IN CALIFORNIA ONLY

EROSION CONTROL QUANTITIES

SHEET	LOCATION	L†	R†	DESCRIPTION	EROSION CONTROL (BONDED FIBER MATRIX) (SQFT)	WOOD MULCH	COMPOST SOCK	PURE LIVE SEED (N)
					SQFT	CY	LF	LBS
EC-1	"A1" 103+22 TO 103+33	X	X	EC TYPE 2	140			.54
EC-2	"A3" 300+00 TO 304+94	X	X	EC TYPE 2	9210			35.49
EC-2	"A3" 301+36 TO 303+89		X	EC TYPE 3		7.0		
EC-2	"A3" 301+36 TO 303+09		X	COMPOST SOCK			350	
				TOTAL	9350	7.0	350	36.03

(N) NOT A SEPARATE PAY ITEM, FOR INFORMATION ONLY

APPROVED FOR EROSION CONTROL WORK ONLY

EROSION CONTROL LEGEND AND QUANTITIES

ECL-1

REVISED BY | DATE REVISED
LOGAN MOORE | LAURA LAZZAROTTO
CALCULATED-DESIGNED BY | CHECKED BY
FUNCTIONAL SUPERVISOR | STEVE THORNE

STATE OF CALIFORNIA - DEPARTMENT OF TRANSPORTATION
Caltrans® LANDSCAPE ARCHITECTURE

P:\PROJ\01\0B540\drafting\sheets\0112000136tc001.dgn

LAST REVISION 00-00-00 | DATE PLOTTED => 16-AUG-2016 | TIME PLOTTED => 10:18

Dist	COUNTY	ROUTE	POST MILES TOTAL PROJECT	SHEET No.	TOTAL SHEETS
01	Men	162	13.9,22.7	16	59

Laura Lazzarotto
LICENSED LANDSCAPE ARCHITECT

June 13, 2016
PLANS APPROVAL DATE

LICENSED LANDSCAPE ARCHITECT
Laura Lazzarotto
Laura Lazzarotto
Signature
8-31-17
Renewal Date
06/13/16
Date
STATE OF CALIFORNIA

THE STATE OF CALIFORNIA OR ITS OFFICERS OR AGENTS SHALL NOT BE RESPONSIBLE FOR THE ACCURACY OR COMPLETENESS OF SCANNED COPIES OF THIS PLAN SHEET.

NOTE:

1. FOR ACCURATE RIGHT OF WAY DATA, CONTACT RIGHT OF WAY ENGINEERING AT THE DISTRICT OFFICE.

LEGEND:

EROSION CONTROL TYPE 2

EROSION CONTROL TYPE 3

\\ CS \ COMPOST SOCK

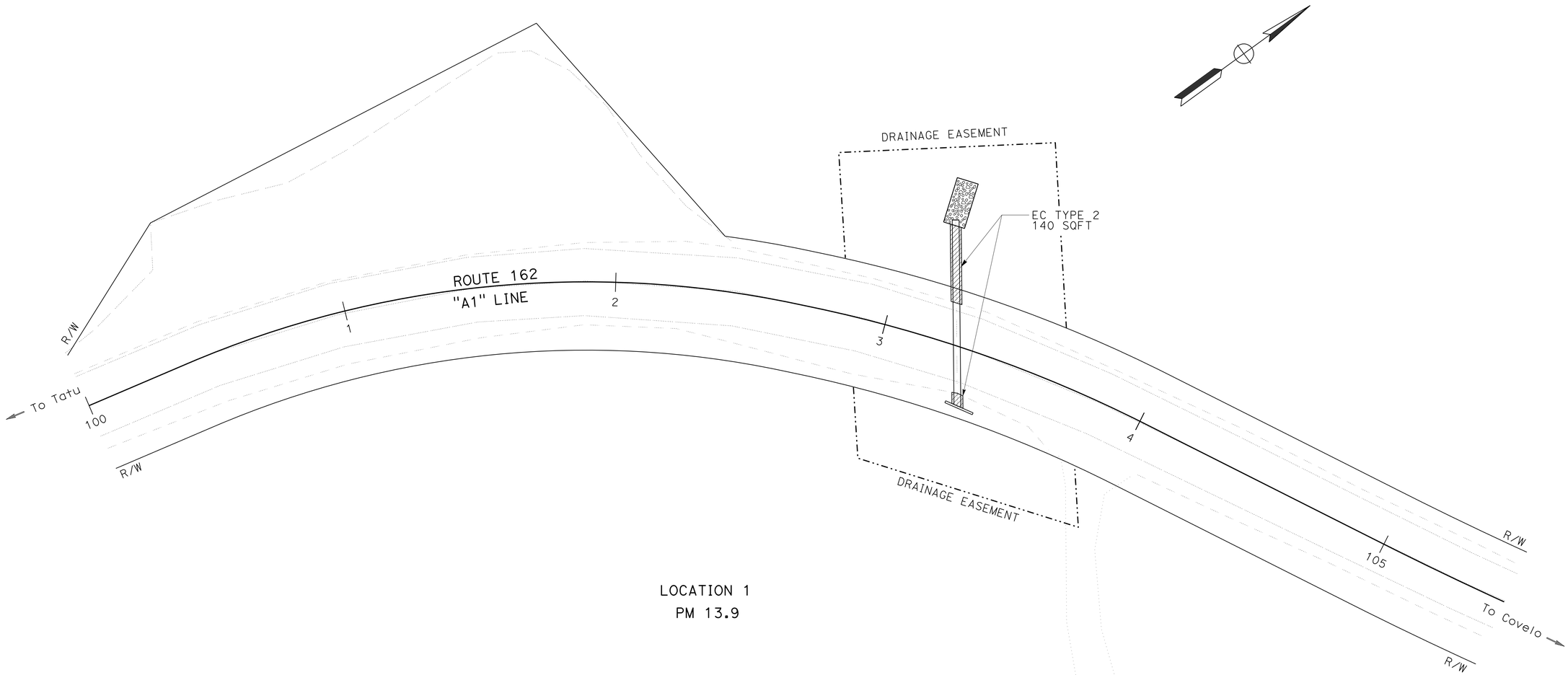

LOCATION 1
PM 13.9

APPROVED FOR EROSION CONTROL WORK ONLY

EROSION CONTROL PLAN

SCALE: 1" = 20'

EC-1

REVISED BY	DATE REVISED

CALCULATED-DESIGNED BY	CHECKED BY
LOGAN MOORE	LAURA LAZZAROTTO

FUNCTIONAL SUPERVISOR: STEVE THORNE

STATE OF CALIFORNIA - DEPARTMENT OF TRANSPORTATION
Caltrans® LANDSCAPE ARCHITECTURE

P:\PROJ\01\08540\drafting\sheets\0112000136te002.dgn

LAST REVISION 00-00-00 | DATE PLOTTED => 16-AUG-2016 | TIME PLOTTED => 10:18

NOTE:

1. FOR ACCURATE RIGHT OF WAY DATA, CONTACT RIGHT OF WAY ENGINEERING AT THE DISTRICT OFFICE.

Dist	COUNTY	ROUTE	POST MILES TOTAL PROJECT	SHEET No.	TOTAL SHEETS
01	Men	162	13.9,22.7	17	59

Laura Lazzarotto
LICENSED LANDSCAPE ARCHITECT

June 13, 2016
PLANS APPROVAL DATE

LICENSED LANDSCAPE ARCHITECT
Laura Lazzarotto-La 4043
Signature
8-31-17
Renewal Date
06/13/16
Date
STATE OF CALIFORNIA

THE STATE OF CALIFORNIA OR ITS OFFICERS OR AGENTS SHALL NOT BE RESPONSIBLE FOR THE ACCURACY OR COMPLETENESS OF SCANNED COPIES OF THIS PLAN SHEET.

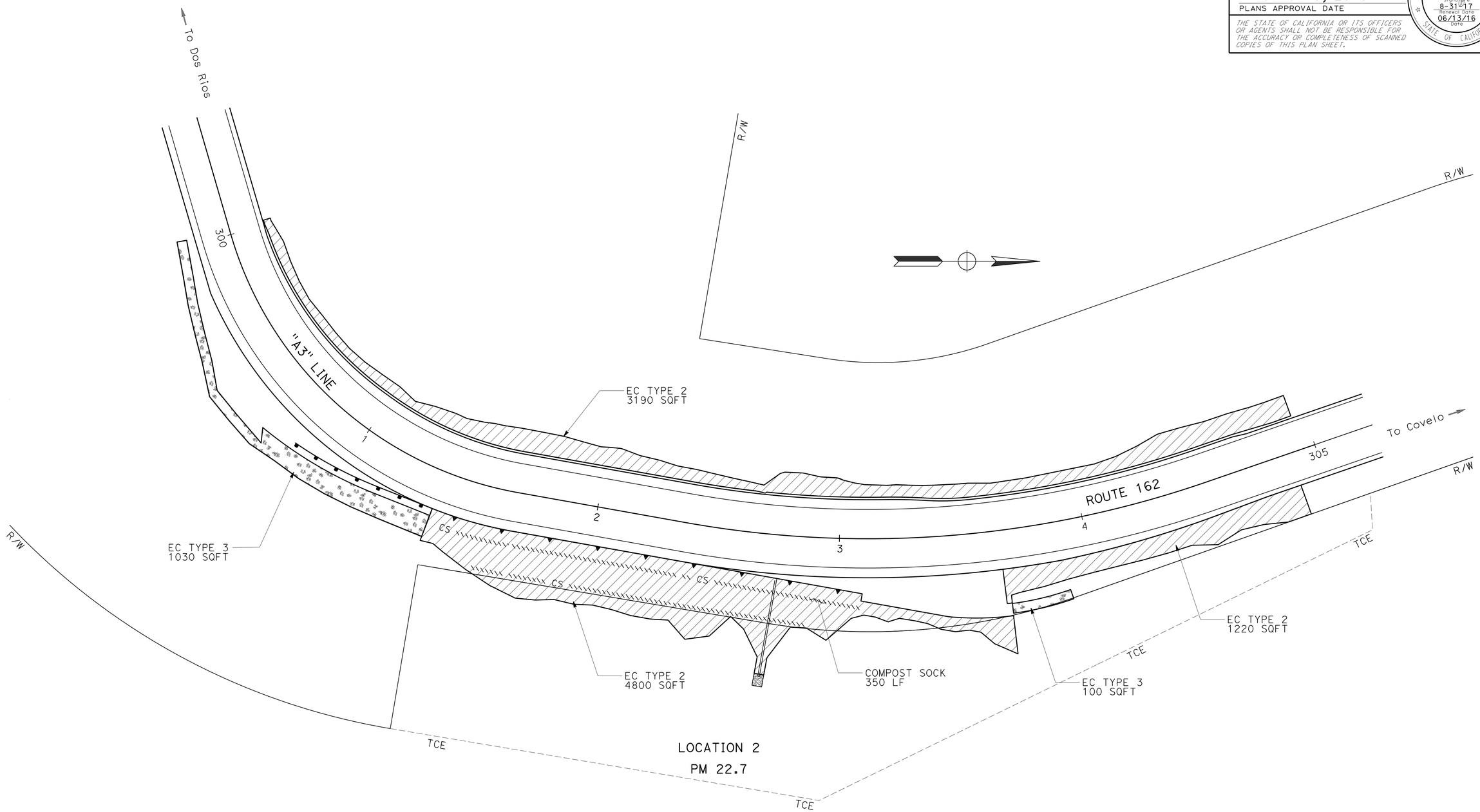

LOCATION 2
PM 22.7

EROSION CONTROL PLAN

SCALE: 1" = 20'

APPROVED FOR EROSION CONTROL WORK ONLY

EC-2

REVISED BY	DATE REVISED

LOGAN MOORE — CALCULATED-DESIGNED BY
LAURA LAZZAROTTO — CHECKED BY
STEVE THORNE — FUNCTIONAL SUPERVISOR

STATE OF CALIFORNIA - DEPARTMENT OF TRANSPORTATION
Caltrans® LANDSCAPE ARCHITECTURE

P:\PROJ\01\0B540\drafting\sheets\0112000136te003.dgn

LAST REVISION 00-00-00 | DATE PLOTTED => 16-AUG-2016 | TIME PLOTTED => 10:18

BORDER LAST REVISED 7/2/2010 | USERNAME => s140040 | DGN FILE => 0112000136te002 | RELATIVE BORDER SCALE IS IN INCHES 0 1 2 3 | UNIT 0314 | PROJECT NUMBER & PHASE 0112000136-1 | EA 01-0B5401

Dist	COUNTY	ROUTE	POST MILES TOTAL PROJECT	SHEET No.	TOTAL SHEETS
01	Men	162	13.9,22.7	18	59

Brian T. Finck 06/13/16
REGISTERED ELECT ENGINEER DATE

June 13, 2016
PLANS APPROVAL DATE

REGISTERED PROFESSIONAL ENGINEER BRIAN T. FINCK No. 17756 Exp. 6-30-16 ELECT STATE OF CALIFORNIA

THE STATE OF CALIFORNIA OR ITS OFFICERS OR AGENTS SHALL NOT BE RESPONSIBLE FOR THE ACCURACY OR COMPLETENESS OF SCANNED COPIES OF THIS PLAN SHEET.

NOTES:

1. EXACT SIGN LOCATIONS TO BE DETERMINED BY THE ENGINEER.
2. EQUIPMENT REQUIRED FOR THE TEMPORARY PORTABLE SIGNAL SYSTEM MUST BE PROTECTED OR 15′ MINIMUM FROM ETW.
3. FOR ACCURATE RIGHT OF WAY DATA, CONTACT RIGHT OF WAY ENGINEERING AT THE DISTRICT OFFICE.

LEGEND

- CHANNELIZER (SURFACE MOUNTED)
- CONSTRUCTION AREA SIGN (SEE CS-1, TH-1)
- DIRECTION OF TRAFFIC
- FLASHING BEACON
- TEMPORARY SIGNAL SYSTEM WITH CONTROLLER ASSEMBLIES
- TEMPORARY LIGHTING SYSTEM

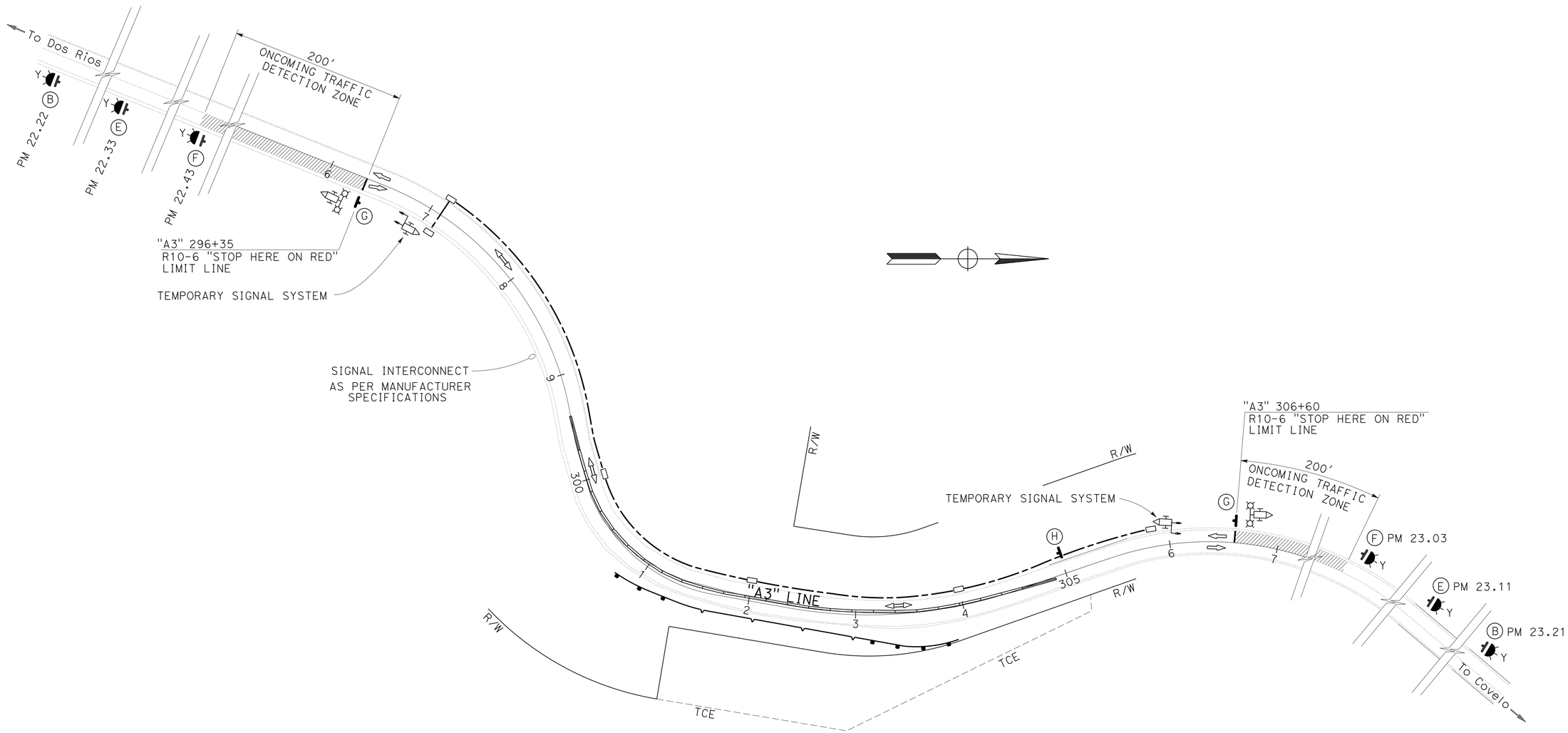

LOCATION 2
PM 22.7

TEMPORARY PORTABLE SIGNAL SYSTEM

SCALE: 1" = 50′

E-1

THIS PLAN IS ACCURATE FOR ELECTRICAL WORK ONLY

REVISED BY | DATE REVISED
BRIAN FINCK | WILLIAM BARTLEY
CALCULATED-DESIGNED BY | CHECKED BY
FUNCTIONAL SUPERVISOR: JOHN CARSON
STATE OF CALIFORNIA - DEPARTMENT OF TRANSPORTATION
Caltrans
ELECTRICAL

P:\PROJ\01\0B540\drafting\sheets\0112000136ua001.dgn

LAST REVISION 00-00-00 | DATE PLOTTED => 16-AUG-2016 | TIME PLOTTED => 10:18

BORDER LAST REVISED 7/2/2010 | USERNAME => s132662 | DGN FILE => 0112000136ua001.dgn | RELATIVE BORDER SCALE IS IN INCHES 0 1 2 3 | UNIT 0045 | PROJECT NUMBER & PHASE 01120001361

Dist	COUNTY	ROUTE	POST MILES TOTAL PROJECT	SHEET No.	TOTAL SHEETS
01	Men	162	13.9,22.7	19	59

Brian T. Finck 06/13/16
REGISTERED ELECT ENGINEER DATE

June 13, 2016
PLANS APPROVAL DATE

REGISTERED PROFESSIONAL ENGINEER BRIAN T. FINCK No. 17756 Exp. 6-30-16 ELECT STATE OF CALIFORNIA

THE STATE OF CALIFORNIA OR ITS OFFICERS OR AGENTS SHALL NOT BE RESPONSIBLE FOR THE ACCURACY OR COMPLETENESS OF SCANNED COPIES OF THIS PLAN SHEET.

NOTES: (THIS SHEET ONLY)

1. THIS UNIT SHALL BE LOCATED IN AN UNSHADED AREA. WOOD POLE WITH PHOTOVOLTAIC PANELS SHALL BE LOCATED OUTSIDE THE CLEAR RECOVERY ZONE OR PROTECTED IN PLACE.

2. SEE SHEET CS-1 & TH-1 FOR SIGNS (B), (E) & (F)

ABBREVIATION:

A-h AMPERE HOUR

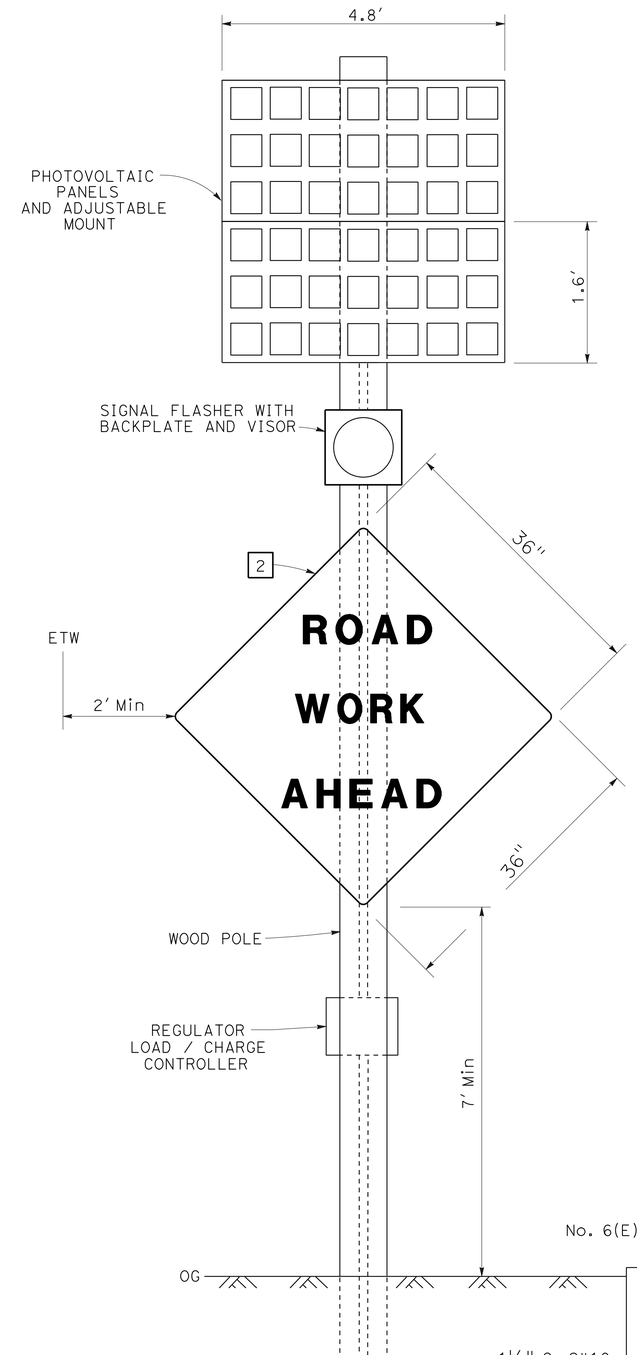

FLASHING BEACON (PHOTOVOLTAIC POWERED)

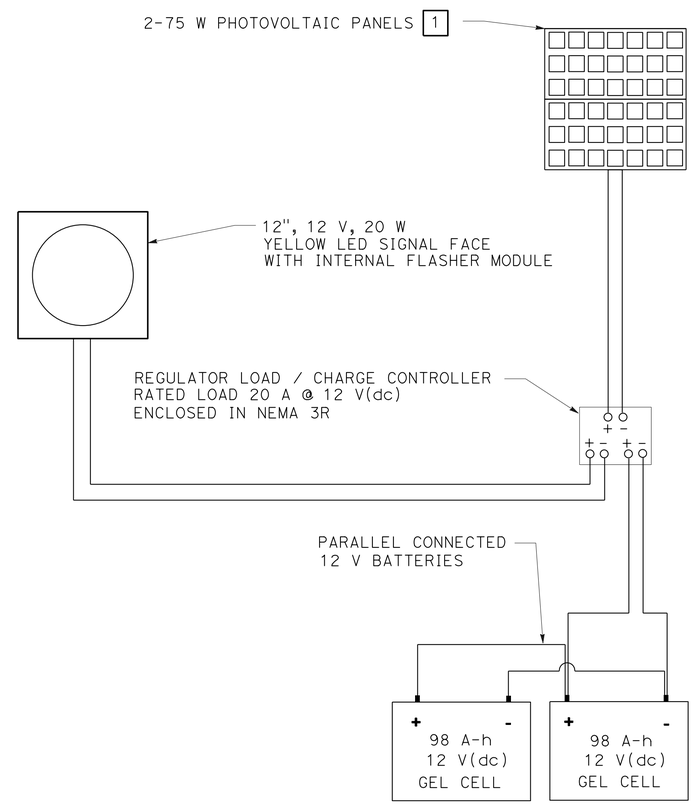

CONNECTION DIAGRAM

TEMPORARY PORTABLE SIGNAL SYSTEM

SHEET NUMBER	TEMPORARY SIGNAL SYSTEM	TEMPORARY LIGHTING SYSTEM	FBCA	#10 CONDUCTORS	NEMA 3R SERVICE ENCLOSEURE	No. 6 (E) PULL BOX	1 SECTION SIGNAL HEAD	REGULATION LOAD/ CHARGE CONTROLLER	98 A-h 12 V (dc) GEL CELL	75 W PHOTOVOLTAIC PANELS	WOOD POLE
	EA	EA	EA	LF	EA	EA	EA	EA	EA	EA	EA
E-1	2	2	6	600	6	6	6	6	12	12	6

NOTE:

THE QUANTITIES ON THIS SHEET ARE NOT SEPARATE PAY ITEMS AND ARE FOR INFORMATION ONLY.

ELECTRICAL DETAILS AND QUANTITIES

NO SCALE

E-2

THIS PLAN IS ACCURATE FOR ELECTRICAL WORK ONLY

REVISED BY | DATE REVISED
BRIAN FINCK | WILLIAM BARTLEY
CALCULATED-DESIGNED BY | CHECKED BY
FUNCTIONAL SUPERVISOR: JOHN CARSON
STATE OF CALIFORNIA - DEPARTMENT OF TRANSPORTATION
Caltrans
ELECTRICAL

P:\PROJ\01\0B540\drafting\sheets\0112000136ua002.dgn

LAST REVISION 00-00-00 | DATE PLOTTED => 16-AUG-2016 | TIME PLOTTED => 10:19

M

Maint	MAINTENANCE
Max	MAXIMUM
MB	METAL BEAM
MBB	METAL BEAM BARRIER
MBGR	METAL BEAM GUARD RAILING
Med	MEDIAN
MGS	MIDWEST GUARDRAIL SYSTEM
MH	MANHOLE
Min	MINIMUM
Misc	MISCELLANEOUS
Misc I & S	MISCELLANEOUS IRON AND STEEL
Mkr	MARKER
Mod	MODIFIED,
	MODIFY
Mon	MONUMENT
MP	METAL PLATE
MPGR	METAL PLATE GUARD RAILING
MR	MOVEMENT RATING
MSE	MECHANICALLY STABILIZED EMBANKMENT
Mt	MOUNTAIN, MOUNT
Mtl	MATERIAL
MVP	MAINTENANCE VEHICLE PULLOUT

N

N	NORTH
NB	NORTHBOUND
No.	NUMBER (MUST HAVE PERIOD)
Nos.	NUMBERS (MUST HAVE PERIOD)
NPS	NOMINAL PIPE SIZE
NS	NEAR SIDE
NSP	NEW STANDARD PLAN
NTS	NOT TO SCALE

O

Oblr	OBLITERATE
OC	OVERCROSSING
OD	OUTSIDE DIAMETER
OF	OUTSIDE FACE
OG	ORIGINAL GROUND
OGAC	OPEN GRADED ASPHALT CONCRETE
OGFC	OPEN GRADED FRICTION COURSE
OH	OVERHEAD
OHWM	ORDINARY HIGH WATER MARK
O-O	OUT TO OUT
Opp	OPPOSITE
OSD	OVERSIDE DRAIN

P

p	PAGE
PAP	PERFORATED ALUMINUM PIPE
PB	PULL BOX
PC	POINT OF CURVATURE,
	PRECAST
PCC	POINT OF COMPOUND CURVE,
	PORTLAND CEMENT CONCRETE
PCMS	PORTABLE CHANGEABLE MESSAGE SIGN
PCP	PERFORATED CONCRETE PIPE,
	PRESTRESSED CONCRETE PIPE
PCVC	POINT OF COMPOUND VERTICAL CURVE
PEC	PERMIT TO ENTER AND CONSTRUCT
Ped	PEDESTRIAN
Ped OC	PEDESTRIAN OVERCROSSING
Ped UC	PEDESTRIAN UNDERCROSSING
Perm Mtl	PERMEABLE MATERIAL

P continued

PG	PROFILE GRADE
PI	POINT OF INTERSECTION
PJP	PARTIAL JOINT PENETRATION
Pkwy	PARKWAY
ℙ,PL	PLATE
P/L	PROPERTY LINE
PM	POST MILE,
	TIME FROM NOON TO MIDNIGHT
PN	PAVING NOTCH
POC	POINT OF HORIZONTAL CURVE
POT	POINT OF TANGENT
POVC	POINT OF VERTICAL CURVE
PP	PIPE PILE,
	PLASTIC PIPE,
	POWER POLE
PPL	PREFORMED PERMEABLE LINER
PPP	PERFORATED PLASTIC PIPE
PRC	POINT OF REVERSE CURVE
PRF	PAVEMENT REINFORCING FABRIC
PRVC	POINT OF REVERSE VERTICAL CURVE
PS&E	PLANS, SPECIFICATIONS AND ESTIMATES
PS, P/S	PRESTRESSED
PSP	PERFORATED STEEL PIPE
PT	POINT OF TANGENCY
PVC	POLYVINYL CHLORIDE
Pvmt	PAVEMENT

Q

Qty	QUANTITY

R

R	RADIUS
R & D	REMOVE AND DISPOSE
R & S	REMOVE AND SALVAGE
R/C	RATE OF CHANGE
RCA	REINFORCED CONCRETE ARCH
RCB	REINFORCED CONCRETE BOX
RCP	REINFORCED CONCRETE PIPE
RCPA	REINFORCED CONCRETE PIPE ARCH
Rd	ROAD
Reinf	REINFORCED,
	REINFORCEMENT,
	REINFORCING
Rel	RELOCATE
Repl	REPLACEMENT
Ret	RETAINING
Rev	REVISED, REVISION
Rdwy	ROADWAY
RHMA	RUBBERIZED HOT MIX ASPHALT
Riv	RIVER
RM	ROAD-MIXED
RP	RADIUS POINT,
	REFERENCE POINT
RR	RAILROAD
RSP	ROCK SLOPE PROTECTION,
	REVISED STANDARD PLAN
Rt	RIGHT
Rte	ROUTE
RW	REDWOOD,
	RETAINING WALL
R/W	RIGHT OF WAY
Rwy	RAILWAY

S

S	SOUTH,
	SUPPLEMENT
SAE	STRUCTURE APPROACH EMBANKMENT
Salv	SALVAGE
SAPP	STRUCTURAL ALUMINUM PLATE PIPE
SB	SOUTHBOUND
SC	SAND CUSHION
SCSP	SLOTTED CORRUGATED STEEL PIPE
SD	STORM DRAIN
Sec	SECOND,
	SECTION
Sep	SEPARATION
SG	SUBGRADE
Shld	SHOULDER
Sht	SHEET
Sim	SIMILAR
₤	STATION LINE
SM	SELECTED MATERIAL
Spec	SPECIAL,
	SPECIFICATIONS
SPP	SLOTTED PLASTIC PIPE
SS	SLOPE STAKE
SSBM	STRAP AND SADDLE BRACKET METHOD
SSD	STRUCTURAL SECTION DRAIN
SSPA	STRUCTURAL STEEL PLATE ARCH
SSPP	STRUCTURAL STEEL PLATE PIPE
SSPPA	STRUCTURAL STEEL PLATE PIPE ARCH
SSRP	STEEL SPIRAL RIB PIPE
St	STREET
Sta	STATION
STBB	SINGLE THRIE BEAM BARRIER
Std	STANDARD
Str	STRUCTURE
Surf	SURFACING
SW	SIDEWALK,
	SOUND WALL
Swr	SEWER
Sym	SYMMETRICAL
S4S	SURFACE 4 SIDES

T

T	SEMI-TANGENT
Tan	TANGENT
TBB	THRIE BEAM BARRIER
Tbr	TIMBER
TC	TOP OF CURB
TCB	TRAFFIC CONTROL BOX
TCE	TEMPORARY CONSTRUCTION EASEMENT
Tel	TELEPHONE
Temp	TEMPORARY
TG	TOP OF GRADE
Tot	TOTAL
TP	TELEPHONE POLE
TPB	TREATED PERMEABLE BASE
TPM	TREATED PERMEABLE MATERIAL
Trans	TRANSITION

T continued

TS	TRANSVERSE,
	TRAFFIC SIGNAL,
	TUBULAR STEEL
Typ	TYPICAL

U

UC	UNDERCROSSING
UD	UNDERDRAIN
UG	UNDERGROUND
UON	UNLESS OTHERWISE NOTED
UP	UNDERPASS

V

V	VALVE,
	DESIGN SPEED
Var	VARIABLE,
	VARIES
VC	VERTICAL CURVE
VCP	VITRIFIED CLAY PIPE
Vert	VERTICAL
Via	VIADUCT
Vol	VOLUME

W

W	WEST,
	WIDTH
WB	WESTBOUND
WH	WEEP HOLE
WM	WIRE MESH
WS	WATER SURFACE
WSP	WELDED STEEL PIPE
Wt	WEIGHT
WV	WATER VALVE
WW	WINGWALL
WWLOL	WINGWALL LAYOUT LINE

X

X Sec	CROSS SECTION
Xing	CROSSING

Y

Yr	YEAR
Yrs	YEARS

Dist	COUNTY	ROUTE	POST MILES TOTAL PROJECT	SHEET No.	TOTAL SHEETS
01	Men	162	13.9,22.7	20	59

Grace M. Tsushima
REGISTERED CIVIL ENGINEER

July 19, 2013
PLANS APPROVAL DATE

REGISTERED PROFESSIONAL ENGINEER
Grace M. Tsushima
No. C49814
Exp. 9-30-14
CIVIL
STATE OF CALIFORNIA

THE STATE OF CALIFORNIA OR ITS OFFICERS OR AGENTS SHALL NOT BE RESPONSIBLE FOR THE ACCURACY OR COMPLETENESS OF SCANNED COPIES OF THIS PLAN SHEET.

TO ACCOMPANY PLANS DATED 06-13-16

UNIT OF MEASUREMENT SYMBOLS:

Some of the symbols used in the project plan quantity tables and in the Bid Item List are:

TABLE A

SYMBOL USED	DEFINITIONS
ACRE	ACRE
CF	CUBIC FOOT
CY	CUBIC YARD
EA	EACH
GAL	GALLON
LB	POUND
LF	LINEAR FOOT
SQFT	SQUARE FOOT
SQYD	SQUARE YARD
STA	100 FEET
TAB	TABLET
TON	2,000 POUNDS

Some of the symbols used in the plans other than in the project plan quantity tables are:

TABLE B

SYMBOL USED	DEFINITIONS
ksi	KIPS PER SQUARE INCH
ksf	KIPS PER SQUARE FOOT
psi	POUNDS PER SQUARE INCH
psf	POUNDS PER SQUARE FOOT
lb/ft^3, pcf	POUNDS PER CUBIC FOOT
tsf	TONS PER SQUARE FOOT
mph, MPH *	MILES PER HOUR
ø	NOMINAL DIAMETER
oz	OUNCE
lb	POUND
kip	1,000 POUNDS
cal	CALORIE
ft	FOOT OR FEET
gal	GALLON

* For use on a sign panel only

STATE OF CALIFORNIA
DEPARTMENT OF TRANSPORTATION

ABBREVIATIONS (SHEET 2 OF 2)

NO SCALE

RSP A10B DATED JULY 19, 2013 SUPERSEDES STANDARD PLAN A10B DATED MAY 20, 2011 - PAGE 2 OF THE STANDARD PLANS BOOK DATED 2010.

REVISED STANDARD PLAN RSP A10B

2010 REVISED STANDARD PLAN RSP A10B

DATE PLOTTED => 16-AUG-2016
TIME PLOTTED => 10:19

REFERENCE: CALTRANS SOIL & ROCK LOGGING, CLASSIFICATION, AND PRESENTATION MANUAL (2010)

Dist	COUNTY	ROUTE	POST MILES TOTAL PROJECT	SHEET No.	TOTAL SHEETS
01	Men	162	13.9,22.7	21	59

CERTIFIED ENGINEERING GEOLOGIST

October 30, 2015
PLANS APPROVAL DATE

REGISTERED GEOLOGIST
CHRIS A. RISDEN
CERTIFIED ENGINEERING GEOLOGIST
No. 2541
Exp. 9-30-17
STATE OF CALIFORNIA

THE STATE OF CALIFORNIA OR ITS OFFICERS OR AGENTS SHALL NOT BE RESPONSIBLE FOR THE ACCURACY OR COMPLETENESS OF SCANNED COPIES OF THIS PLAN SHEET.

TO ACCOMPANY PLANS DATED 06-13-16

ABBREVIATION:

GWS = Ground Water Surface

CEMENTATION

DESCRIPTION	CRITERIA
WEAK	CRUMBLES OR BREAKS WITH HANDLING OR LITTLE FINGER PRESSURE.
MODERATE	CRUMBLES OR BREAKS WITH CONSIDERABLE FINGER PRESSURE.
STRONG	WILL NOT CRUMBLE OR BREAK WITH FINGER PRESSURE.

BOREHOLE IDENTIFICATION

SYMBOL	HOLE TYPE	DESCRIPTION
Size	A	AUGER BORING (HOLLOW OR SOLID STEM BUCKET)
Size	R	ROTARY DRILLED BORING (CONVENTIONAL)
	RW	ROTARY DRILLED WITH SELF-CASING WIRE-LINE
	RC	ROTARY CORE WITH CONTINUOUSLY-SAMPLED, SELF-CASING WIRE-LINE
	P	ROTARY PERCUSSION BORING (AIR)
Size	R	ROTARY DRILLED DIAMOND CORE
	RC	ROTARY DRILLED DIAMOND CORE, CONTINUOUSLY SAMPLED
Size	HD	HAND DRIVEN (1-INCH SOIL TUBE)
	HA	HAND AUGER
●	D	DYNAMIC CONE PENETRATION BORING
▲	CPT	CONE PENETRATION TEST (ASTM D 5778)
[ ]	O	OTHER (NOTE ON LOTB)

Note: Size in inches.

CONSISTENCY OF COHESIVE SOILS

DESCRIPTION	SHEAR STRENGTH (tsf)	POCKET PENETROMETER MEASUREMENT, PP, (tsf)	TORVANE MEASUREMENT, TV, (tsf)	VANE SHEAR MEASUREMENT, VS, (tsf)
VERY SOFT	LESS THAN 0.12	LESS THAN 0.25	LESS THAN 0.12	LESS THAN 0.12
SOFT	0.12 - 0.25	0.25 - 0.5	0.12 - 0.25	0.12 - 0.25
MEDIUM STIFF	0.25 - 0.5	0.5 - 1	0.25 - 0.5	0.25 - 0.5
STIFF	0.5 - 1	1 - 2	0.5 - 1	0.5 - 1
VERY STIFF	1 - 2	2 - 4	1 - 2	1 - 2
HARD	GREATER THAN 2	GREATER THAN 4	GREATER THAN 2	GREATER THAN 2

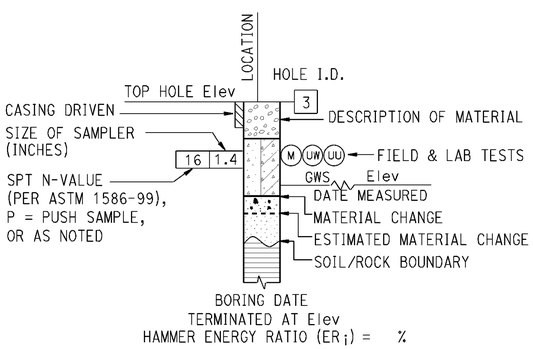

ROTARY BORING

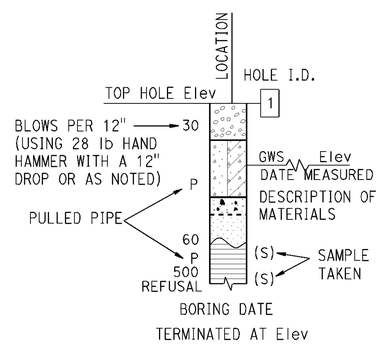

HAND BORING

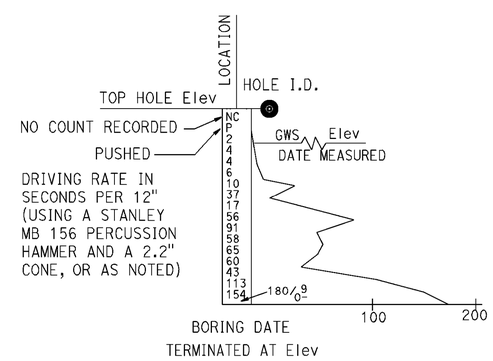

DYNAMIC CONE PENETRATION BORING

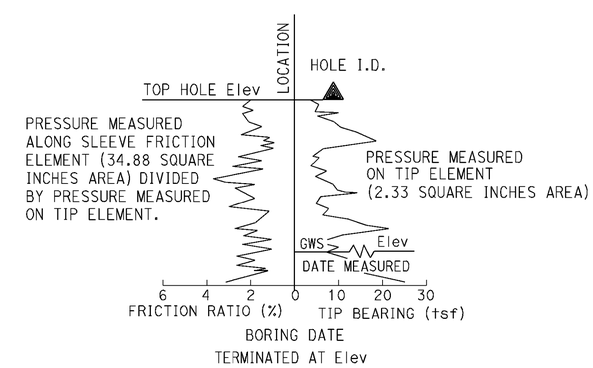

CONE PENETRATION TEST (CPT) BORING

STATE OF CALIFORNIA
DEPARTMENT OF TRANSPORTATION

LEGEND - SOIL (SHEET 1 OF 2)

NO SCALE

RSP A10F DATED OCTOBER 30, 2015 SUPERSEDES STANDARD PLAN A10F DATED MAY 20, 2011 - PAGE 6 OF THE STANDARD PLANS BOOK DATED 2010.

REVISED STANDARD PLAN RSP A10F

2010 REVISED STANDARD PLAN RSP A10F

DATE PLOTTED => 16-AUG-2016
TIME PLOTTED => 10:19

REFERENCE: CALTRANS SOIL & ROCK LOGGING, CLASSIFICATION, AND PRESENTATION MANUAL (2010)

Dist	COUNTY	ROUTE	POST MILES TOTAL PROJECT	SHEET No.	TOTAL SHEETS
01	Men	162	13.9,22.7	22	59

CERTIFIED ENGINEERING GEOLOGIST

October 30, 2015
PLANS APPROVAL DATE

REGISTERED GEOLOGIST
CHRIS A. RISDEN
CERTIFIED ENGINEERING GEOLOGIST
No. 2541
Exp. 9-30-17
STATE OF CALIFORNIA

THE STATE OF CALIFORNIA OR ITS OFFICERS OR AGENTS SHALL NOT BE RESPONSIBLE FOR THE ACCURACY OR COMPLETENESS OF SCANNED COPIES OF THIS PLAN SHEET.

TO ACCOMPANY PLANS DATED 06-13-16

GROUP SYMBOLS AND NAMES

GRAPHIC/SYMBOL	GROUP NAMES	GRAPHIC/SYMBOL	GROUP NAMES
GW	WELL-GRADED GRAVEL WELL-GRADED GRAVEL WITH SAND	CL	LEAN CLAY LEAN CLAY WITH SAND LEAN CLAY WITH GRAVEL SANDY LEAN CLAY SANDY LEAN CLAY WITH GRAVEL GRAVELLY LEAN CLAY GRAVELLY LEAN CLAY WITH SAND
GP	POORLY-GRADED GRAVEL POORLY-GRADED GRAVEL WITH SAND		
GW-GM	WELL-GRADED GRAVEL WITH SILT WELL-GRADED GRAVEL WITH SILT AND SAND	CL-ML	SILTY CLAY SILTY CLAY WITH SAND SILTY CLAY WITH GRAVEL SANDY SILTY CLAY SANDY SILTY CLAY WITH GRAVEL GRAVELLY SILTY CLAY GRAVELLY SILTY CLAY WITH SAND
GW-GC	WELL-GRADED GRAVEL WITH CLAY (OR SILTY CLAY) WELL-GRADED GRAVEL WITH CLAY AND SAND (OR SILTY CLAY AND SAND)		
GP-GM	POORLY-GRADED GRAVEL WITH SILT POORLY-GRADED GRAVEL WITH SILT AND SAND	ML	SILT SILT WITH SAND SILT WITH GRAVEL SANDY SILT SANDY SILT WITH GRAVEL GRAVELLY SILT GRAVELLY SILT WITH SAND
GP-GC	POORLY-GRADED GRAVEL WITH CLAY (OR SILTY CLAY) POORLY-GRADED GRAVEL WITH CLAY AND SAND (OR SILTY CLAY AND SAND)		
GM	SILTY GRAVEL SILTY GRAVEL WITH SAND	OL	ORGANIC LEAN CLAY ORGANIC LEAN CLAY WITH SAND ORGANIC LEAN CLAY WITH GRAVEL SANDY ORGANIC LEAN CLAY SANDY ORGANIC LEAN CLAY WITH GRAVEL GRAVELLY ORGANIC LEAN CLAY GRAVELLY ORGANIC LEAN CLAY WITH SAND
GC	CLAYEY GRAVEL CLAYEY GRAVEL WITH SAND		
GC-GM	SILTY, CLAYEY GRAVEL SILTY, CLAYEY GRAVEL WITH SAND	OL	ORGANIC SILT ORGANIC SILT WITH SAND ORGANIC SILT WITH GRAVEL SANDY ORGANIC SILT SANDY ORGANIC SILT WITH GRAVEL GRAVELLY ORGANIC SILT GRAVELLY ORGANIC SILT WITH SAND
SW	WELL-GRADED SAND WELL-GRADED SAND WITH GRAVEL		
SP	POORLY-GRADED SAND POORLY-GRADED SAND WITH GRAVEL	CH	FAT CLAY FAT CLAY WITH SAND FAT CLAY WITH GRAVEL SANDY FAT CLAY SANDY FAT CLAY WITH GRAVEL GRAVELLY FAT CLAY GRAVELLY FAT CLAY WITH SAND
SW-SM	WELL-GRADED SAND WITH SILT WELL-GRADED SAND WITH SILT AND GRAVEL		
SW-SC	WELL-GRADED SAND WITH CLAY (OR SILTY CLAY) WELL-GRADED SAND WITH CLAY AND GRAVEL (OR SILTY CLAY AND GRAVEL)	MH	ELASTIC SILT ELASTIC SILT WITH SAND ELASTIC SILT WITH GRAVEL SANDY ELASTIC SILT SANDY ELASTIC SILT WITH GRAVEL GRAVELLY ELASTIC SILT GRAVELLY ELASTIC SILT WITH SAND
SP-SM	POORLY-GRADED SAND WITH SILT POORLY-GRADED SAND WITH SILT AND GRAVEL		
SP-SC	POORLY-GRADED SAND WITH CLAY (OR SILTY CLAY) POORLY-GRADED SAND WITH CLAY AND GRAVEL (OR SILTY CLAY AND GRAVEL)	OH	ORGANIC FAT CLAY ORGANIC FAT CLAY WITH SAND ORGANIC FAT CLAY WITH GRAVEL SANDY ORGANIC FAT CLAY SANDY ORGANIC FAT CLAY WITH GRAVEL GRAVELLY ORGANIC FAT CLAY GRAVELLY ORGANIC FAT CLAY WITH SAND
SM	SILTY SAND SILTY SAND WITH GRAVEL		
SC	CLAYEY SAND CLAYEY SAND WITH GRAVEL	OH	ORGANIC ELASTIC SILT ORGANIC ELASTIC SILT WITH SAND ORGANIC ELASTIC SILT WITH GRAVEL SANDY ORGANIC ELASTIC SILT SANDY ORGANIC ELASTIC SILT WITH GRAVEL GRAVELLY ORGANIC ELASTIC SILT GRAVELLY ORGANIC ELASTIC SILT WITH SAND
SC-SM	SILTY, CLAYEY SAND SILTY, CLAYEY SAND WITH GRAVEL		
PT	PEAT	OL/OH	ORGANIC SOIL ORGANIC SOIL WITH SAND ORGANIC SOIL WITH GRAVEL SANDY ORGANIC SOIL SANDY ORGANIC SOIL WITH GRAVEL GRAVELLY ORGANIC SOIL GRAVELLY ORGANIC SOIL WITH SAND
	COBBLES COBBLES AND BOULDERS BOULDERS		

FIELD AND LABORATORY TESTING

- (C) CONSOLIDATION (ASTM D2435)
- (CL) COLLAPSE POTENTIAL (ASTM D4546)
- (CP) COMPACTION CURVE (CTM 216)
- (CR) CORROSIVITY TESTING (CTM 643, CTM 422, CTM 417)
- (CU) CONSOLIDATED UNDRAINED TRIAXIAL (ASTM D4767)
- (DS) DIRECT SHEAR (ASTM D3080)
- (EI) EXPANSION INDEX (ASTM D4829)
- (M) MOISTURE CONTENT (ASTM D2216)
- (OC) ORGANIC CONTENT-% (ASTM D2974)
- (P) PERMEABILITY (CTM 220)
- (PA) PARTICLE SIZE ANALYSIS (ASTM D422)
- (PI) PLASTICITY INDEX (AASHTO T 90) LIQUID LIMIT (AASHTO T 89)
- (PL) POINT LOAD INDEX (ASTM D5731)
- (PM) PRESSURE METER
- (R) R-VALUE (CTM 301)
- (SE) SAND EQUIVALENT (CTM 217)
- (SG) SPECIFIC GRAVITY (AASHTO T 100)
- (SL) SHRINKAGE LIMIT (ASTM D4943)
- (SW) SWELL POTENTIAL (ASTM D4546)
- (UC) UNCONFINED COMPRESSION-SOIL (ASTM D2166) UNCONFINED COMPRESSION-ROCK (ASTM D7012 - METHOD C)
- (UU) UNCONSOLIDATED UNDRAINED TRIAXIAL (ASTM D2850)
- (UW) UNIT WEIGHT (ASTM D7263 - METHOD B)

APPARENT DENSITY OF COHESIONLESS SOILS

DESCRIPTION	SPT N_{60} (BLOWS / 12 INCHES)
VERY LOOSE	0 - 5
LOOSE	5 - 10
MEDIUM DENSE	10 - 30
DENSE	30 - 50
VERY DENSE	GREATER THAN 50

MOISTURE

DESCRIPTION	CRITERIA
DRY	NO DISCERNABLE MOISTURE
MOIST	MOISTURE PRESENT, BUT NO FREE WATER
WET	VISIBLE FREE WATER

PERCENT OR PROPORTION OF SOILS

DESCRIPTION	CRITERIA
TRACE	PARTICLES ARE PRESENT BUT ESTIMATED TO BE LESS THAN 5%
FEW	5% - 10%
LITTLE	15% - 25%
SOME	30% - 45%
MOSTLY	50% - 100%

PARTICLE SIZE

DESCRIPTION		SIZE
BOULDER		GREATER THAN 12"
COBBLE		3" - 12"
GRAVEL	COARSE	3/4" - 3"
	FINE	1/5" - 3/4"
SAND	COARSE	1/16" - 1/5"
	MEDIUM	1/64" - 1/16"
	FINE	1/300" - 1/64"
SILT AND CLAY		LESS THAN 1/300"

STATE OF CALIFORNIA
DEPARTMENT OF TRANSPORTATION

LEGEND - SOIL (SHEET 2 OF 2)

NO SCALE

RSP A10G DATED OCTOBER 30, 2015 SUPERSEDES STANDARD PLAN A10G DATED MAY 20, 2011 - PAGE 7 OF THE STANDARD PLANS BOOK DATED 2010.

REVISED STANDARD PLAN RSP A10G

2010 REVISED STANDARD PLAN RSP A10G

DATE PLOTTED => 16-AUG-2016
TIME PLOTTED => 10:19

Dist	COUNTY	ROUTE	POST MILES TOTAL PROJECT	SHEET No.	TOTAL SHEETS
01	Men	162	13.9,22.7	23	59

REGISTERED CIVIL ENGINEER

July 20, 2012
PLANS APPROVAL DATE

REGISTERED PROFESSIONAL ENGINEER
Roberta L. McLaughlin
No. C40375
Exp. 3-31-13
CIVIL
STATE OF CALIFORNIA

THE STATE OF CALIFORNIA OR ITS OFFICERS OR AGENTS SHALL NOT BE RESPONSIBLE FOR THE ACCURACY OR COMPLETENESS OF SCANNED COPIES OF THIS PLAN SHEET.

TO ACCOMPANY PLANS DATED 06-13-16

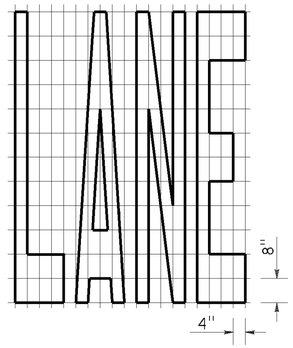

A=24 ft²

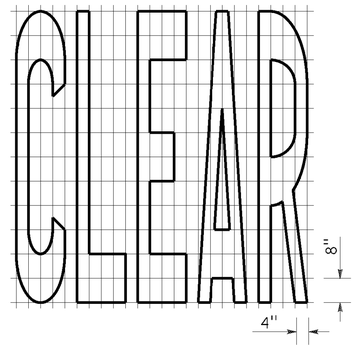

A=27 ft²

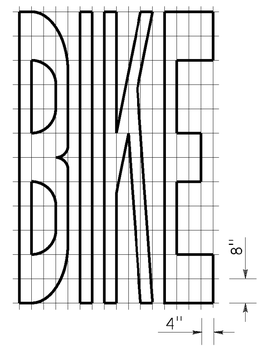

A=21 ft²

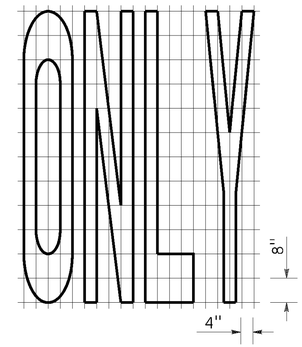

A=22 ft²

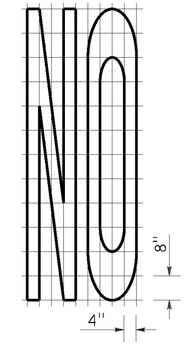

A=14 ft²

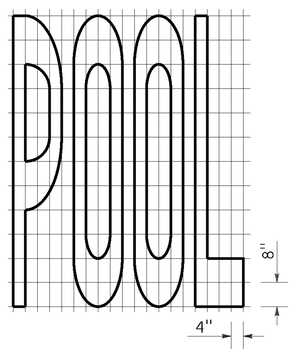

A=23 ft²

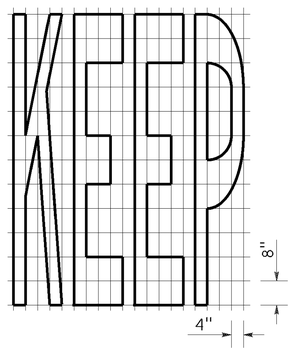

A=24 ft²

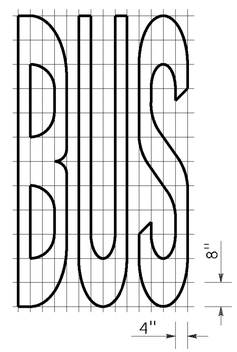

A=20 ft²

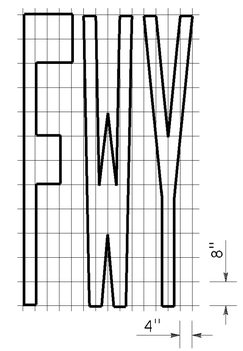

A=16 ft²

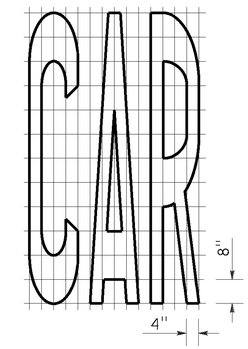

A=17 ft²

WORD MARKINGS			
ITEM	ft²	ITEM	ft²
LANE	24	NO	14
POOL	23	BIKE	21
CAR	17	BUS	20
CLEAR	27	ONLY	22
KEEP	24	FWY	16

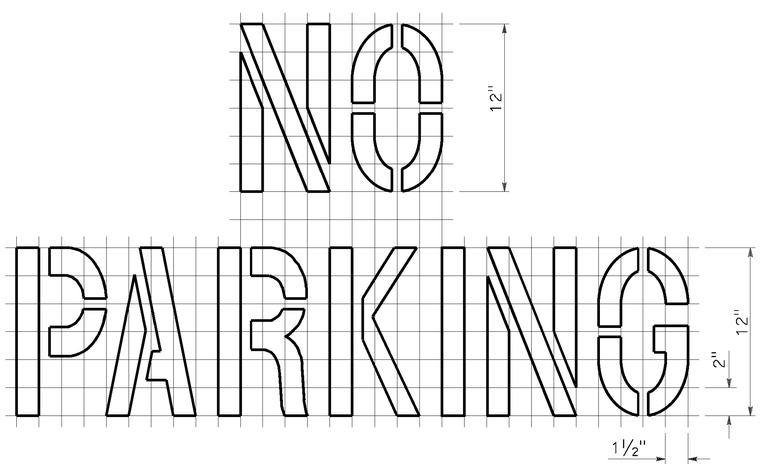

A=2 ft²
See Notes 6 and 7

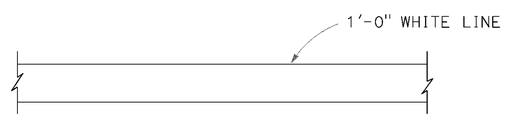

LIMIT LINE (STOP LINE)

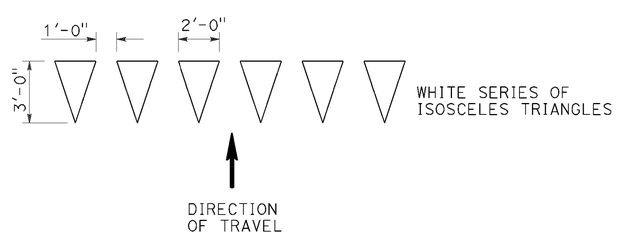

YIELD LINE

NOTES:

1. If a message consists of more than one word, it should read "UP", i.e., the first word should be nearest the driver.
2. The space between words should be at least four times the height of the characters for low speed roads, but not more than ten times the height of the characters. The space may be reduced appropriately where there is limited space because of local conditions.
3. Minor variations in dimensions may be accepted by the Engineer.
4. Portions of a letter, number or symbol may be separated by connecting segments not to exceed 2" in width.
5. The words "NO PARKING" pavement marking is to be used for parking facilities. For typical locations of markings, see Standard Plans A90A and A90B.
6. The words "NO PARKING", shall be painted in white letters no less than 1'-0" high on a contrasting background and located so that it is visible to traffic enforcement officials.

STATE OF CALIFORNIA
DEPARTMENT OF TRANSPORTATION

PAVEMENT MARKINGS WORDS, LIMIT AND YIELD LINES

NO SCALE

RSP A24E DATED JULY 20, 2012 SUPERSEDES STANDARD PLAN A24E
DATED MAY 20, 2011 - PAGE 17 OF THE STANDARD PLANS BOOK DATED 2010.

REVISED STANDARD PLAN RSP A24E

2010 REVISED STANDARD PLAN RSP A24E

DATE PLOTTED => 16-AUG-2016
TIME PLOTTED => 10:19

Dist	COUNTY	ROUTE	POST MILES TOTAL PROJECT	SHEET No.	TOTAL SHEETS
01	Men	162	13.9,22.7	24	59

REGISTERED CIVIL ENGINEER

October 30, 2015
PLANS APPROVAL DATE

REGISTERED PROFESSIONAL ENGINEER Carl M. Duan No. C59976 Exp. 6-30-16 CIVIL STATE OF CALIFORNIA

THE STATE OF CALIFORNIA OR ITS OFFICERS OR AGENTS SHALL NOT BE RESPONSIBLE FOR THE ACCURACY OR COMPLETENESS OF SCANNED COPIES OF THIS PLAN SHEET.

TO ACCOMPANY PLANS DATED 06-13-16

2010 REVISED STANDARD PLAN RSP A62F

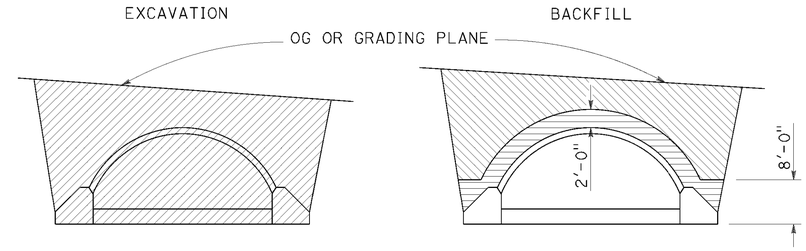

IN TRENCH

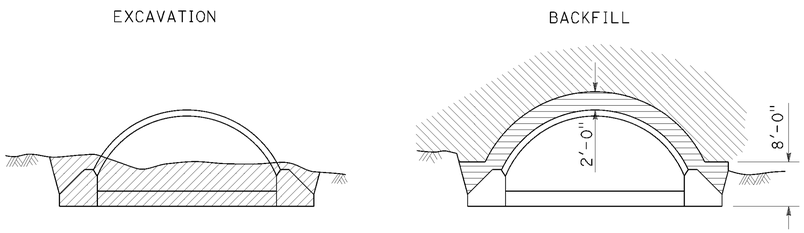

IN EMBANKMENT

STRUCTURAL STEEL PLATE ARCHES

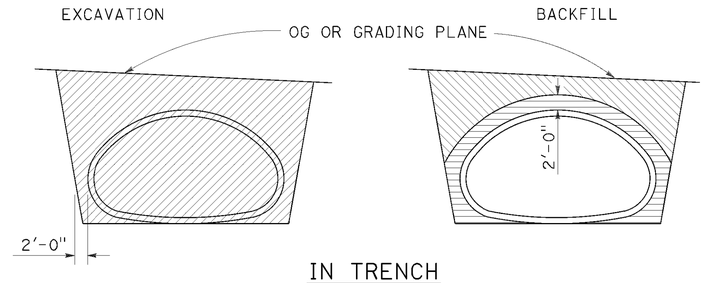

IN TRENCH

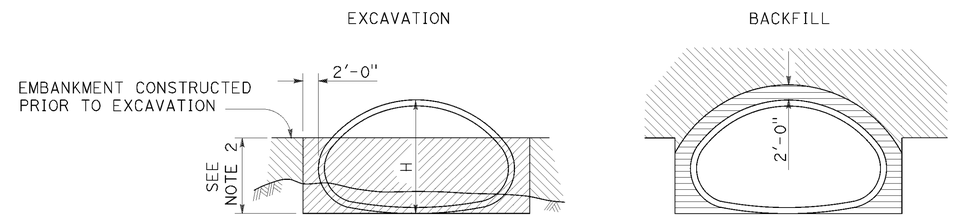

IN EMBANKMENT

STRUCTURAL STEEL PLATE PIPE ARCHES AND VEHICULAR UNDERCROSSING

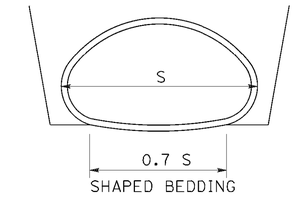

SHAPED BEDDING

S = Larger than 84"

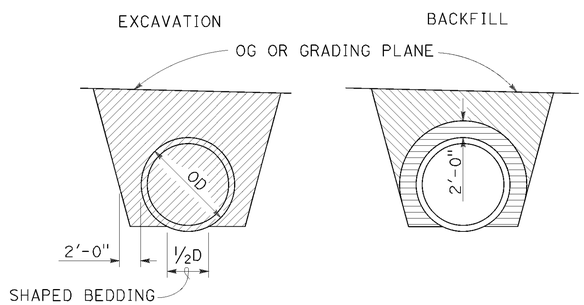

IN TRENCH

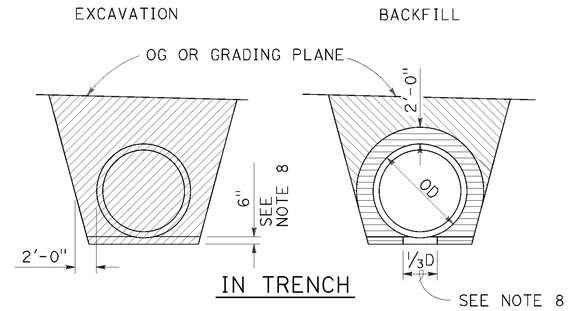

IN TRENCH

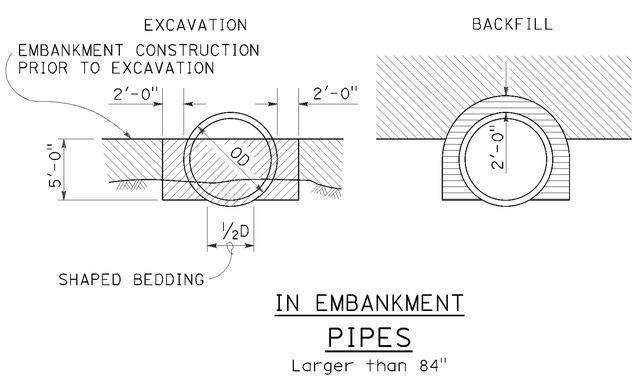

IN EMBANKMENT

PIPES

Larger than 84"

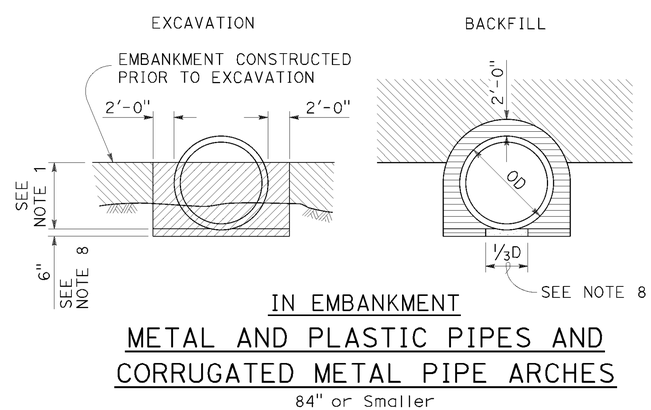

IN EMBANKMENT

METAL AND PLASTIC PIPES AND CORRUGATED METAL PIPE ARCHES

84" or Smaller

NOTES:

1. PIPES: 30" minimum for diameters up to and including 42" then ⅔ diameter but no more than 60" required. CORRUGATED METAL PIPE ARCHES: 30" maximum.
2. ⅔ H up to 60" maximum.
3. Slope or shore excavation sides as necessary.
4. Backfill shall be placed full width of excavation except as noted.
5. Diagrams do not apply to overside drains.
6. Dimensions shown are minimum.
7. Construction strutting of structural steel plate pipe, arches and vehicular undercrossing to be used when shown on the project plans. When shown, see Standard Plan D88A for strutting requirements.
8. Excavation below pipe and 80% relative compaction requirements for plastic pipes only.
9. D is the inside diameter (ID) of the pipe.

LEGEND

- STRUCTURE EXCAVATION (CULVERT)
- ROADWAY EMBANKMENT
- STRUCTURE BACKFILL (CULVERT) 95% RELATIVE COMPACTION
- STRUCTURE BACKFILL (CULVERT) 80% RELATIVE COMPACTION

STATE OF CALIFORNIA
DEPARTMENT OF TRANSPORTATION

EXCAVATION AND BACKFILL METAL AND PLASTIC CULVERTS

NO SCALE

RSP A62F DATED OCTOBER 30, 2015 SUPERSEDES STANDARD PLAN A62F DATED MAY 20, 2011 - PAGE 26 OF THE STANDARD PLANS BOOK DATED 2010.

REVISED STANDARD PLAN RSP A62F

DATE PLOTTED => 16-AUG-2016
TIME PLOTTED => 10:20

Dist	COUNTY	ROUTE	POST MILES TOTAL PROJECT	SHEET No.	TOTAL SHEETS
01	Men	162	13.9,22.7	25	59

Randell D. Hiatt
REGISTERED CIVIL ENGINEER

July 19, 2013
PLANS APPROVAL DATE

REGISTERED PROFESSIONAL ENGINEER
Randell D. Hiatt
No. C50200
Exp. 6-30-15
CIVIL
STATE OF CALIFORNIA

THE STATE OF CALIFORNIA OR ITS OFFICERS OR AGENTS SHALL NOT BE RESPONSIBLE FOR THE ACCURACY OR COMPLETENESS OF SCANNED COPIES OF THIS PLAN SHEET.

TO ACCOMPANY PLANS DATED 06-13-16

2010 REVISED STANDARD PLAN RSP A77L1

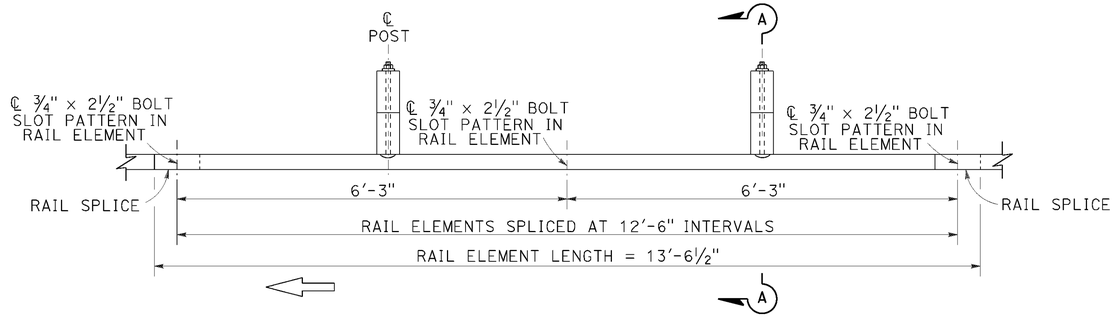

PLAN

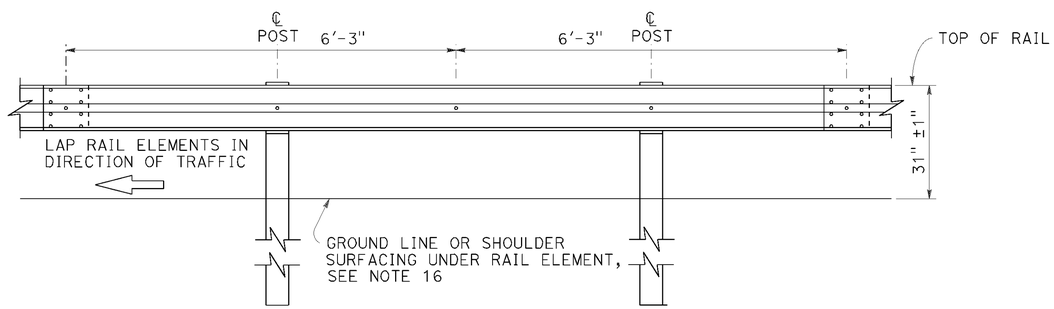

ELEVATION

MIDWEST GUARDRAIL SYSTEM WITH WOOD POST AND BLOCKS

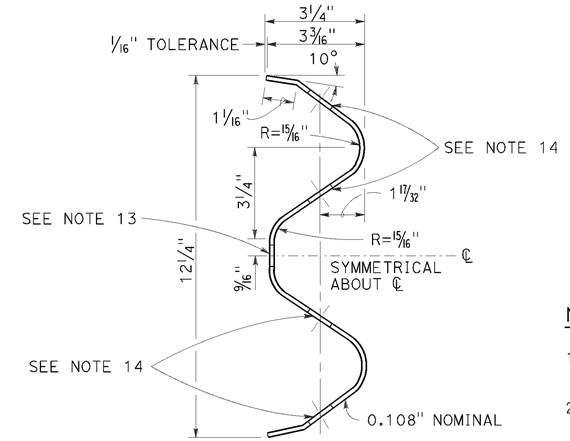

SECTION THRU RAIL ELEMENT

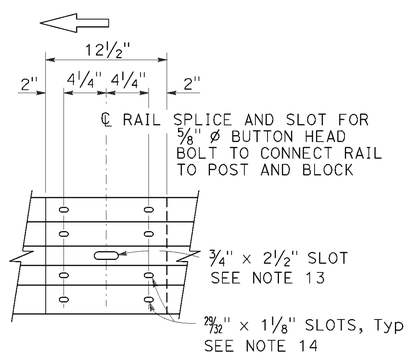

ELEVATION

RAIL ELEMENT SPLICE DETAIL

a) Connect the over lapped end of the rail elements with ⅝" ø × 1⅜" button head oval shoulder splice bolts inserted into the 29⁄32" × 1⅛" slots and bolted together with ⅝" ø recessed hex nuts. Recess of hex nut points toward rail element. A total of 8 bolts and nuts are to be used at each rail splice connection.

b) The ends of the rail elements are to be overlapped in the direction of traffic (see details).

c) Where end cap is to be attached to the end of a rail element, a total of 4 of the above described splice bolts and nuts are to be used.

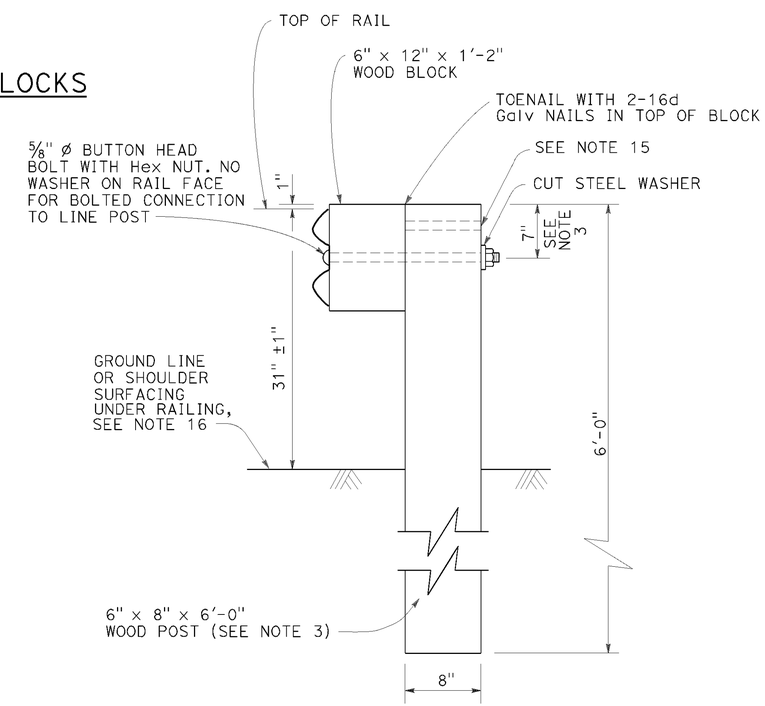

SECTION A-A

TYPICAL WOOD LINE POST INSTALLATION

See Note 4

NOTES:

1. For details of steel post installations, see Revised Standard Plan RSP A77L2.
2. For details of standard hardware used to construct MGS, see Revised Standard Plan RSP A77M1.
3. For details of wood posts and wood blocks used to construct MGS, see Revised Standard Plan RSP A77N1.
4. For additional installation details, see Revised Standard Plan RSP A77N3.
5. MGS post spacing to be 6'-3" center to center, except as otherwise noted.
6. For MGS typical layouts, see the A77P, A77Q and A77R Series of Standard Plans.
7. If railing is connected to terminal system end treatment, use 31" height terminal system end treatment.
8. For MGS end anchor details, see Revised Standard Plans RSP A77S1 and RSP A77T2.
9. For details of MGS transition to bridge railing, see Revised Standard Plan RSP A77U4.
10. For additional details of MSG connection to bridge railing, see Revised Standard Plans RSP A77U1, RSP A77U2 and RSP A77V1.
11. For MGS connection details to abutments and walls, see Revised Standard Plan RSP A77U3.
12. For typical MGS delineation and dike positioning details, see Revised Standard Plan RSP A77N4.
13. Slotted hole for bolted connection of rail element to block and post. See "Section Thru Rail Element".
14. Slotted holes for splice bolts to overlap ends of rail element. See "Section Thru Rail Element".
15. Additional hole in uppermost portion of line post is for potential future adjustments of railing height. See Revised Standard Plan RSP A77N1.
16. Install posts in soil.

STATE OF CALIFORNIA
DEPARTMENT OF TRANSPORTATION

MIDWEST GUARDRAIL SYSTEM STANDARD RAILING SECTION (WOOD POST WITH WOOD BLOCK)

NO SCALE

RSP A77L1 DATED JULY 19, 2013 SUPPLEMENTS STANDARD PLANS BOOK DATED 2010.

REVISED STANDARD PLAN RSP A77L1

DATE PLOTTED => 16-AUG-2016
TIME PLOTTED => 10:20

Dist	COUNTY	ROUTE	POST MILES TOTAL PROJECT	SHEET No.	TOTAL SHEETS
01	Men	162	13.9,22.7	26	59

Randell D. Hiatt
REGISTERED CIVIL ENGINEER

July 19, 2013
PLANS APPROVAL DATE

REGISTERED PROFESSIONAL ENGINEER
Randell D. Hiatt
No. C50200
Exp. 6-30-15
CIVIL
STATE OF CALIFORNIA

THE STATE OF CALIFORNIA OR ITS OFFICERS OR AGENTS SHALL NOT BE RESPONSIBLE FOR THE ACCURACY OR COMPLETENESS OF SCANNED COPIES OF THIS PLAN SHEET.

TO ACCOMPANY PLANS DATED 06-13-16

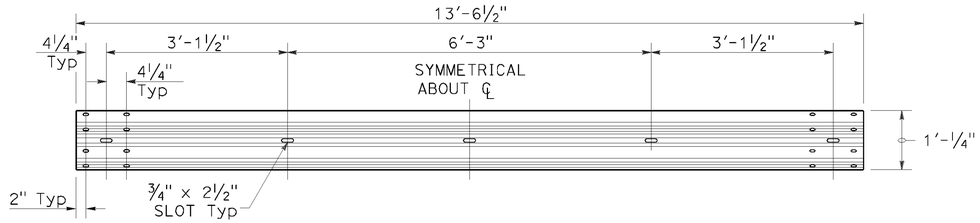

TYPICAL RAIL ELEMENT

NOTE:

1. Slotted holes for splice bolts to overlap ends of rail element.

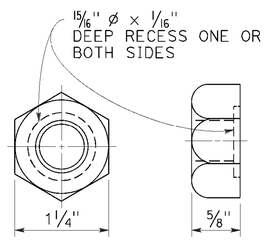

⅝" ø RECESS NUT

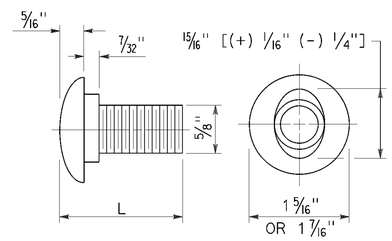

⅝" ø BUTTON HEAD BOLT

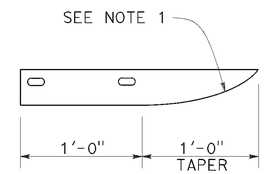

PLAN

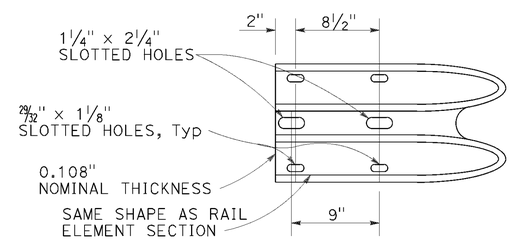

ELEVATION

END CAP
(TYPE A)

BUTTON HEAD BOLT

L	THREAD LENGTH
1⅜"	FULL THREAD LENGTH
2"	FULL THREAD LENGTH
10"	4" Min THREAD LENGTH
18"	4" Min THREAD LENGTH
20"	4" Min THREAD LENGTH
22"	4" Min THREAD LENGTH
26"	4" Min THREAD LENGTH
36"	4" Min THREAD LENGTH
** 2¾"	2" Min THREAD LENGTH
** 19"	4" Min THREAD LENGTH

** For nested rail applications.

STATE OF CALIFORNIA
DEPARTMENT OF TRANSPORTATION

MIDWEST GUARDRAIL SYSTEM STANDARD HARDWARE

NO SCALE

RSP A77M1 DATED JULY 19, 2013 SUPPLEMENTS THE STANDARD PLANS BOOK DATED 2010.

REVISED STANDARD PLAN RSP A77M1

2010 REVISED STANDARD PLAN RSP A77M1

DATE PLOTTED => 16-AUG-2016
TIME PLOTTED => 10:20

Dist	COUNTY	ROUTE	POST MILES TOTAL PROJECT	SHEET No.	TOTAL SHEETS
01	Men	162	13.9,22.7	27	59

Randell D. Hiatt
REGISTERED CIVIL ENGINEER

July 19, 2013
PLANS APPROVAL DATE

REGISTERED PROFESSIONAL ENGINEER
Randell D. Hiatt
No. C50200
Exp. 6-30-15
CIVIL
STATE OF CALIFORNIA

THE STATE OF CALIFORNIA OR ITS OFFICERS OR AGENTS SHALL NOT BE RESPONSIBLE FOR THE ACCURACY OR COMPLETENESS OF SCANNED COPIES OF THIS PLAN SHEET.

TO ACCOMPANY PLANS DATED 06-13-16

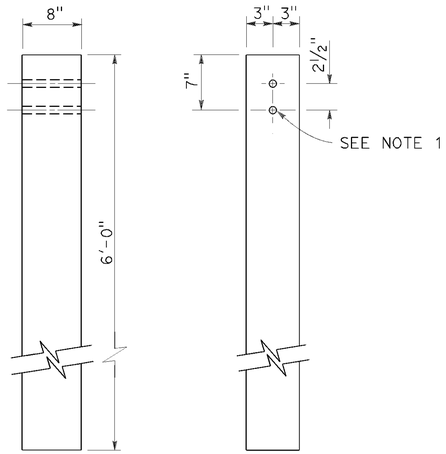

SIDE FRONT

6" x 8" WOOD POST
See Note 3

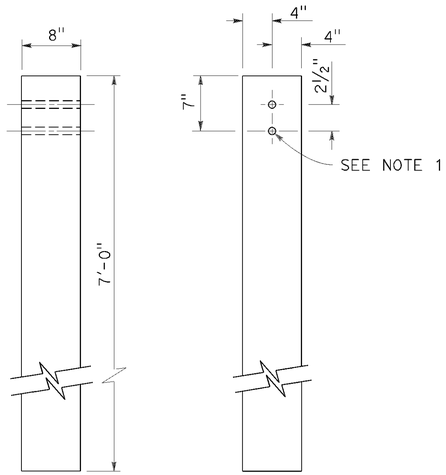

SIDE FRONT

8" x 8" WOOD POST
See Note 4

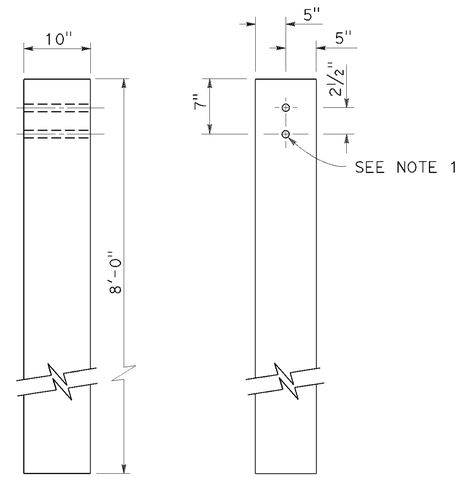

SIDE FRONT

10" x 10" WOOD POST
See Note 5

NOTES:

1. All holes in wood posts and blocks shall be ¾" Dia ± 1/16".
2. Dimensions shown for wood post are nominal.
3. This post and block combination used for standard line post sections of MGS.
4. This post and 8" x 12" block combination used for line post sections of MGS on narrow roadways.
5. This post and 8" x 12" block combination is typically used where strengthened line post sections of MGS are warranted to shield fixed objects.
6. See Revised Standard Plan RSP A77L3 for use of 6" x 8" and 8" x 8" wood blocks.

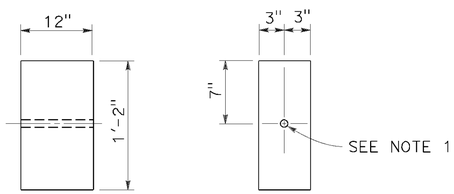

SIDE FRONT

6" x 12" WOOD BLOCK
See Note 3

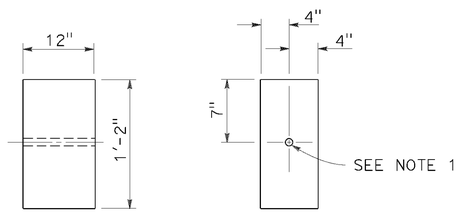

SIDE FRONT

8" x 12" WOOD BLOCK

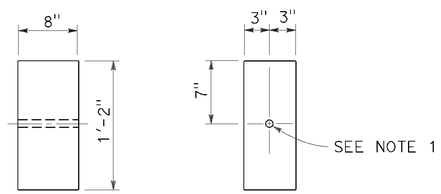

SIDE FRONT

6" x 8" WOOD BLOCK
Only for use with metal beam guard rail see Note 6

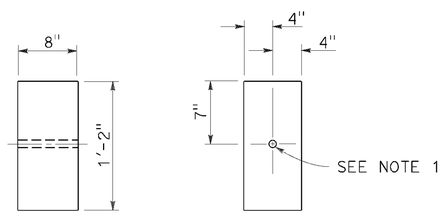

SIDE FRONT

8" x 8" WOOD BLOCK
Only for use with metal beam guard rail see Note 6

STATE OF CALIFORNIA
DEPARTMENT OF TRANSPORTATION

MIDWEST GUARDRAIL SYSTEM WOOD POST AND WOOD BLOCK DETAILS

NO SCALE

RSP A77N1 DATED JULY 19, 2013 SUPPLEMENTS THE STANDARD PLANS BOOK DATED 2010.

REVISED STANDARD PLAN RSP A77N1

2010 REVISED STANDARD PLAN RSP A77N1

DATE PLOTTED => 16-AUG-2016
TIME PLOTTED => 10:20

Dist	COUNTY	ROUTE	POST MILES TOTAL PROJECT	SHEET No.	TOTAL SHEETS
01	Men	162	13.9,22.7	28	59

Randell D. Hiatt
REGISTERED CIVIL ENGINEER

November 15, 2013
PLANS APPROVAL DATE

REGISTERED PROFESSIONAL ENGINEER
Randell D. Hiatt
No. C50200
Exp. 6-30-15
CIVIL
STATE OF CALIFORNIA

THE STATE OF CALIFORNIA OR ITS OFFICERS OR AGENTS SHALL NOT BE RESPONSIBLE FOR THE ACCURACY OR COMPLETENESS OF SCANNED COPIES OF THIS PLAN SHEET.

TO ACCOMPANY PLANS DATED 06-13-16

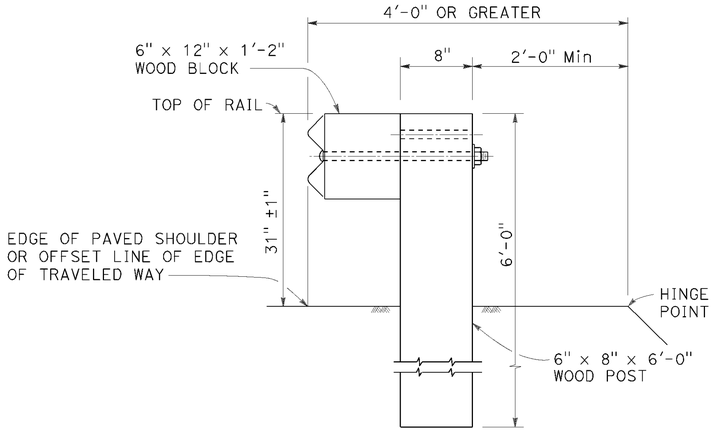

DETAIL A

TYPICAL ROADWAY INSTALLATION

See Note 1

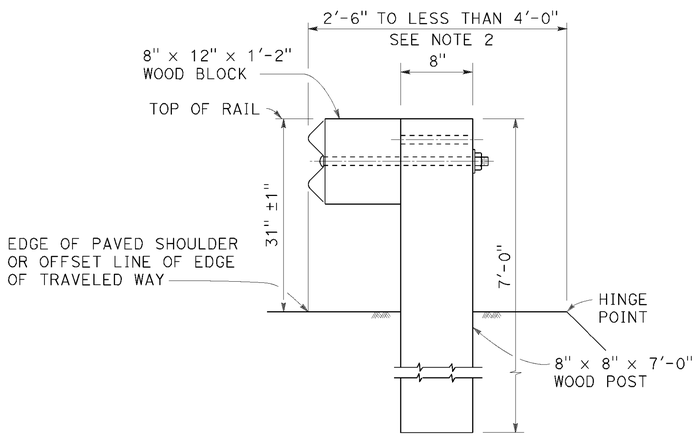

DETAIL B

NARROW ROADWAY INSTALLATION

See Note 1

POST EMBEDMENT

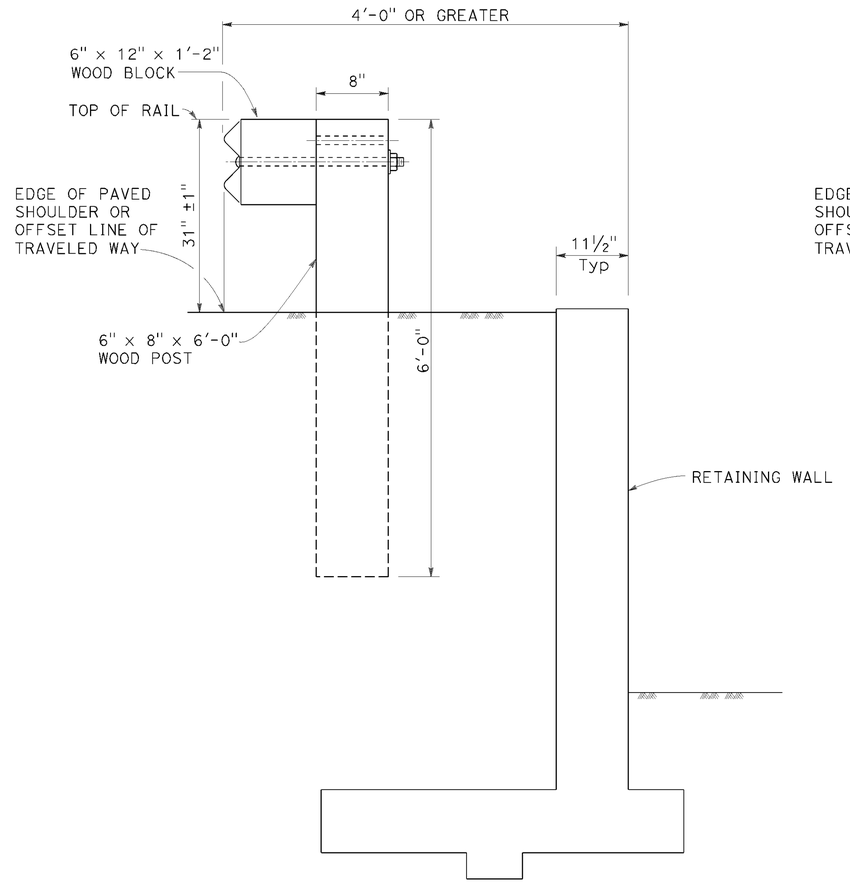

DETAIL C

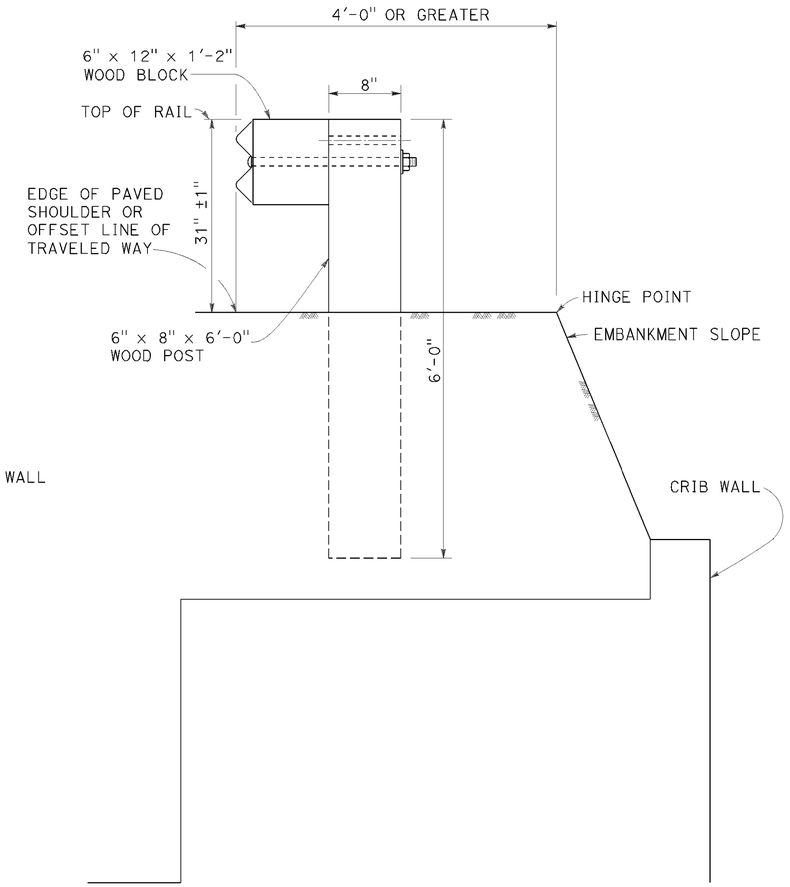

DETAIL D

INSTALLATION AT EARTH RETAINING WALLS

NOTES:

1. These installation details also applicable to steel line post installations. For Detail A, C, and D, where steel line post installations are constructed, W6 x 8.5 or W6 x 9 steel post, 6'-0" in length, with 6" x 12" x 1'-2" notched wood blocks or notched recycled plastic blocks are to be used in place of the size of wood post and wood block shown. For Detail B, where steel line post installations are constructed, W6 x 15 steel post, 8'-0" in length, with 8" x 12" x 1'-2" notched wood blocks or notched recycled plastic blocks are to be used in place of the size of wood post and wood block shown. For additional installation details, see Revised Standard Plan RSP A77L1 and RSP A77L2.
2. Where the distance between the face of the rail and the hinge point is less than 2'-6", see the Project Plans for special details.
3. For dike positioning with MGS installations, see Revised Standard Plan RSP A77N4.

STATE OF CALIFORNIA
DEPARTMENT OF TRANSPORTATION

MIDWEST GUARDRAIL SYSTEM TYPICAL LINE POST EMBEDMENT AND HINGE POINT OFFSET DETAILS

NO SCALE

RSP A77N3 DATED NOVEMBER 15, 2013 SUPERSEDES RSP A77N3 DATED JULY 19, 2013 THAT SUPPLEMENTS THE STANDARD PLANS BOOK DATED 2010.

REVISED STANDARD PLAN RSP A77N3

2010 REVISED STANDARD PLAN RSP A77N3

DATE PLOTTED => 16-AUG-2016
TIME PLOTTED => 10:20

Dist	COUNTY	ROUTE	POST MILES TOTAL PROJECT	SHEET No.	TOTAL SHEETS
01	Men	162	13.9,22.7	29	59

Randell D. Hiatt
REGISTERED CIVIL ENGINEER

July 19, 2013
PLANS APPROVAL DATE

REGISTERED PROFESSIONAL ENGINEER
Randell D. Hiatt
No. C50200
Exp. 6-30-15
CIVIL
STATE OF CALIFORNIA

THE STATE OF CALIFORNIA OR ITS OFFICERS OR AGENTS SHALL NOT BE RESPONSIBLE FOR THE ACCURACY OR COMPLETENESS OF SCANNED COPIES OF THIS PLAN SHEET.

TO ACCOMPANY PLANS DATED 06-13-16

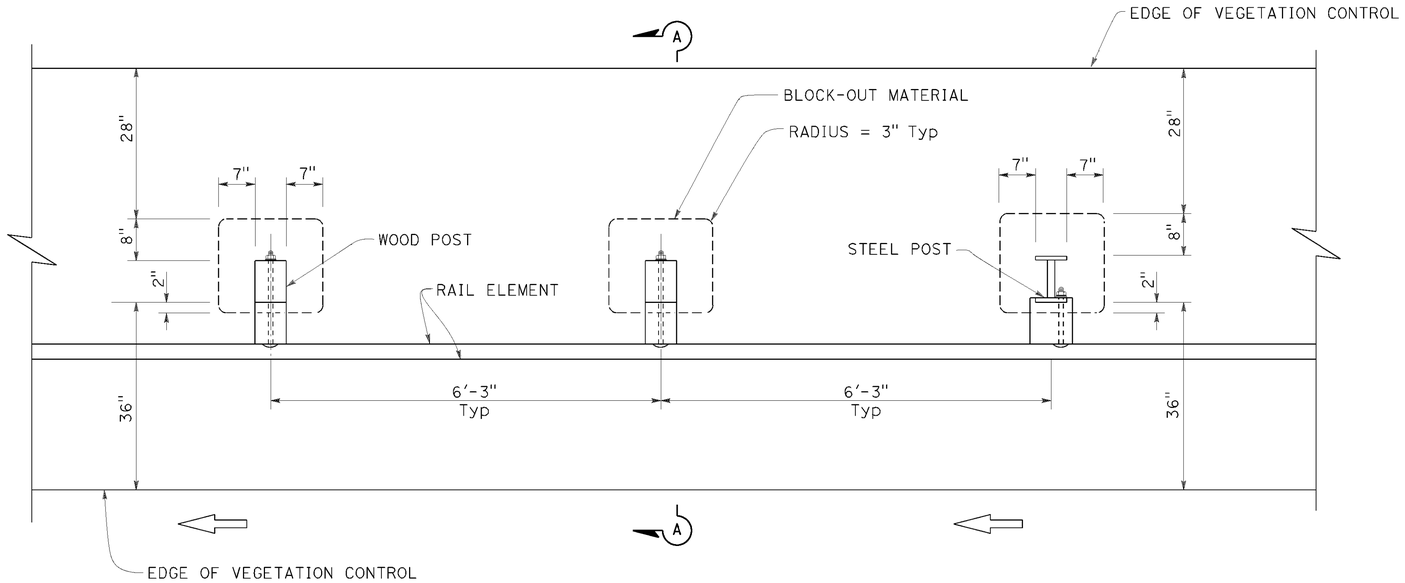

PLAN

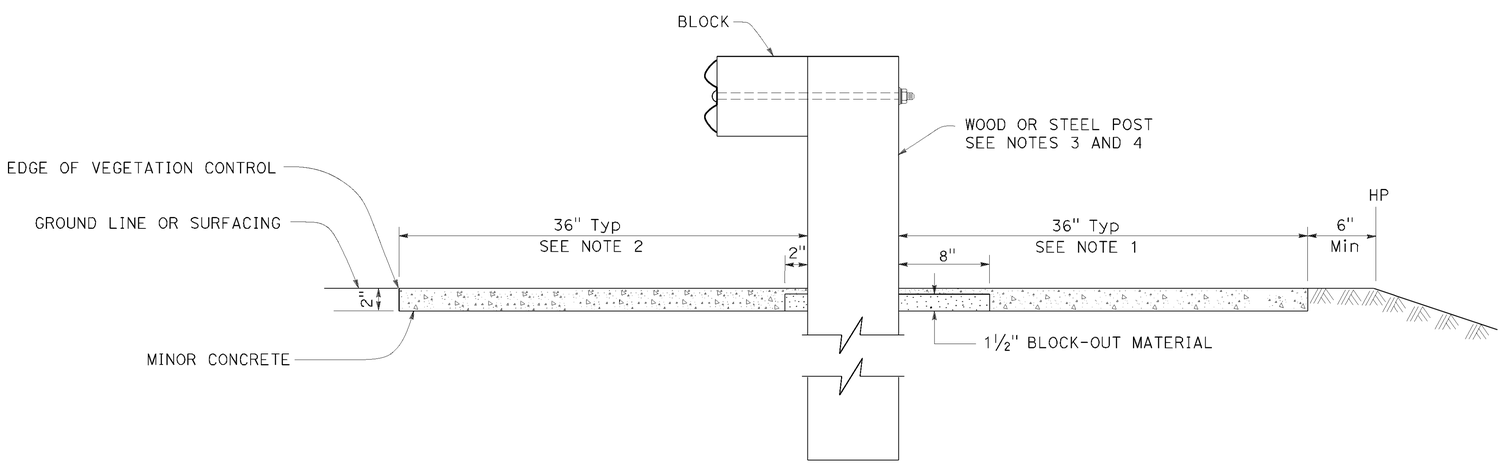

SECTION A-A

NOTES:

1. Where the distance between back of post and hinge point is less than 42", construct vegetation control to 6" from hinge point while maintaining the 8" block-out at back of post. If the 8" block-out at back of post can not be maintained, construct vegetation control flush with the back edge of post.
2. Where dike is constructed under railing, construct vegetation control to back edge of dike. Where paved shoulder is constructed within 36" in front of the post, construct vegetation control to the edge of paved shoulder.
3. For wood post sizes, see Revised Standard Plan RSP A77N1.
4. For steel post sizes, see Revised Standard Plan RSP A77N2.
5. For details not shown, see Revised Standard Plans RSP A77L1 and RSP A77L2.

STATE OF CALIFORNIA
DEPARTMENT OF TRANSPORTATION

MIDWEST GUARDRAIL SYSTEM TYPICAL VEGETATION CONTROL STANDARD RAILING SECTION

NO SCALE

RSP A77N5 DATED JULY 19, 2013 SUPPLEMENTS THE STANDARD PLANS BOOK DATED 2010.

REVISED STANDARD PLAN RSP A77N5

2010 REVISED STANDARD PLAN RSP A77N5

DATE PLOTTED => 16-AUG-2016
TIME PLOTTED => 10:21

Dist	COUNTY	ROUTE	POST MILES TOTAL PROJECT	SHEET No.	TOTAL SHEETS
01	Men	162	13.9,22.7	30	59

Randell D. Hiatt
REGISTERED CIVIL ENGINEER

July 19, 2013
PLANS APPROVAL DATE

REGISTERED PROFESSIONAL ENGINEER
Randell D. Hiatt
No. C50200
Exp. 6-30-15
CIVIL
STATE OF CALIFORNIA

THE STATE OF CALIFORNIA OR ITS OFFICERS OR AGENTS SHALL NOT BE RESPONSIBLE FOR THE ACCURACY OR COMPLETENESS OF SCANNED COPIES OF THIS PLAN SHEET.

TO ACCOMPANY PLANS DATED 06-13-16

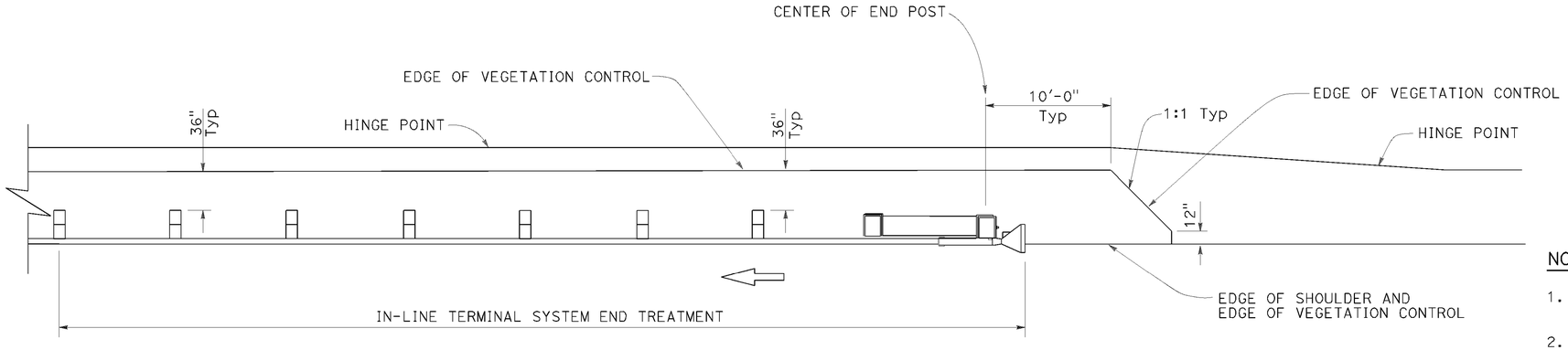

PLAN

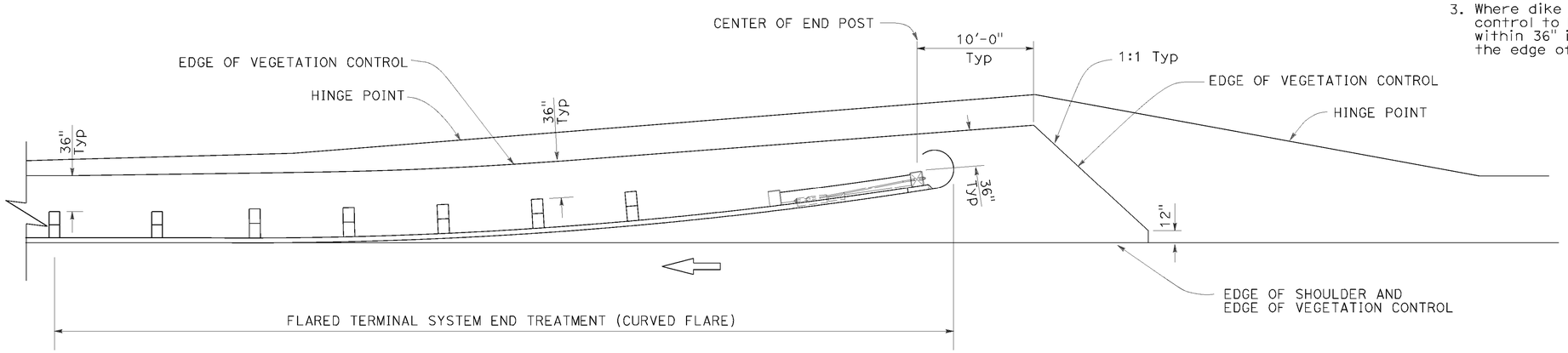

PLAN

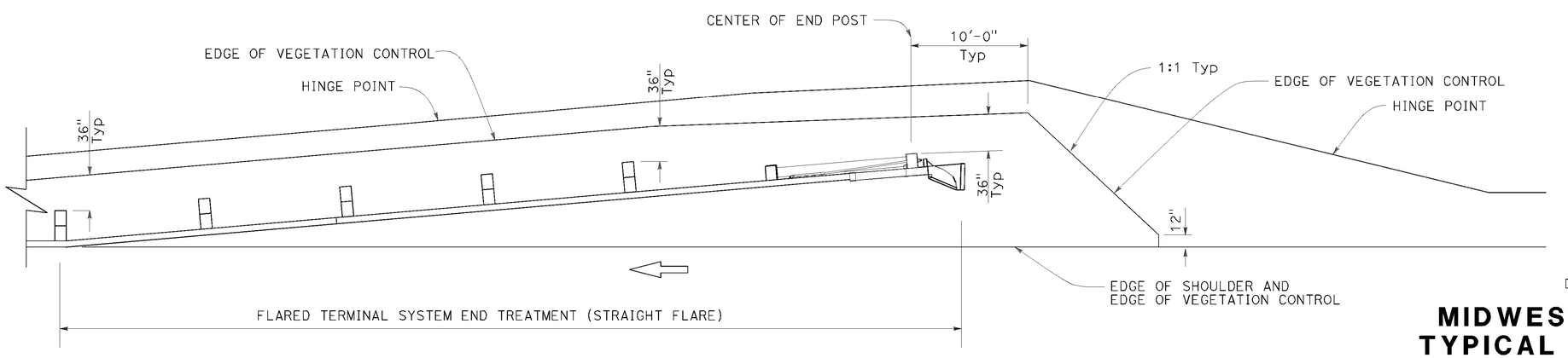

PLAN

NOTES:

1. See Revised Standard Plan RSP A77N5 for additional vegetation control details.
2. Where the distance between back of post and hinge point is less than 42", construct vegetation control to 6" from hinge point while maintaining the 8" block-out at back of post. If the 8" block-out at back of post can not be maintained, construct vegetation control flush with the back edge of post.
3. Where dike is constructed under railing, construct vegetation control to back edge of dike. Where paved shoulder is constructed within 36" in front of the post, construct vegetation control to the edge of paved shoulder.

STATE OF CALIFORNIA
DEPARTMENT OF TRANSPORTATION

MIDWEST GUARDRAIL SYSTEM TYPICAL VEGETATION CONTROL FOR TERMINAL SYSTEM END TREATMENTS

NO SCALE

RSP A77N6 DATED JULY 19, 2013 SUPPLEMENTS THE STANDARD PLANS BOOK DATED 2010.

REVISED STANDARD PLAN RSP A77N6

2010 REVISED STANDARD PLAN RSP A77N6

DATE PLOTTED => 16-AUG-2016
TIME PLOTTED => 10:21

Dist	COUNTY	ROUTE	POST MILES TOTAL PROJECT	SHEET No.	TOTAL SHEETS
01	Men	162	13.9,22.7	31	59

Randell D. Hiatt
REGISTERED CIVIL ENGINEER

August 14, 2015
PLANS APPROVAL DATE

REGISTERED PROFESSIONAL ENGINEER
Randell D. Hiatt
No. C50200
Exp. 6-30-17
CIVIL
STATE OF CALIFORNIA

THE STATE OF CALIFORNIA OR ITS OFFICERS OR AGENTS SHALL NOT BE RESPONSIBLE FOR THE ACCURACY OR COMPLETENESS OF SCANNED COPIES OF THIS PLAN SHEET.

TO ACCOMPANY PLANS DATED 06-13-16

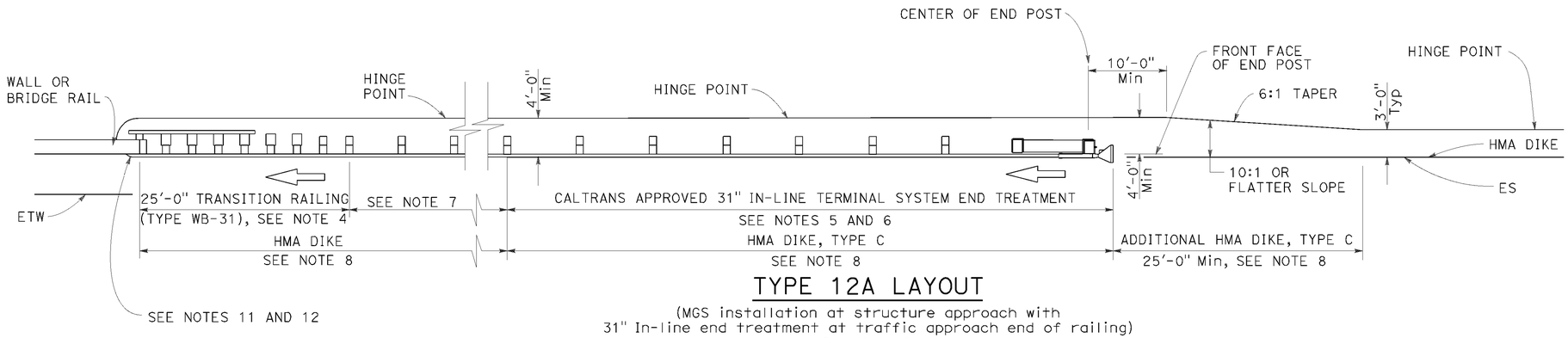

TYPE 12A LAYOUT

(MGS installation at structure approach with
31" In-line end treatment at traffic approach end of railing)
See Note 9

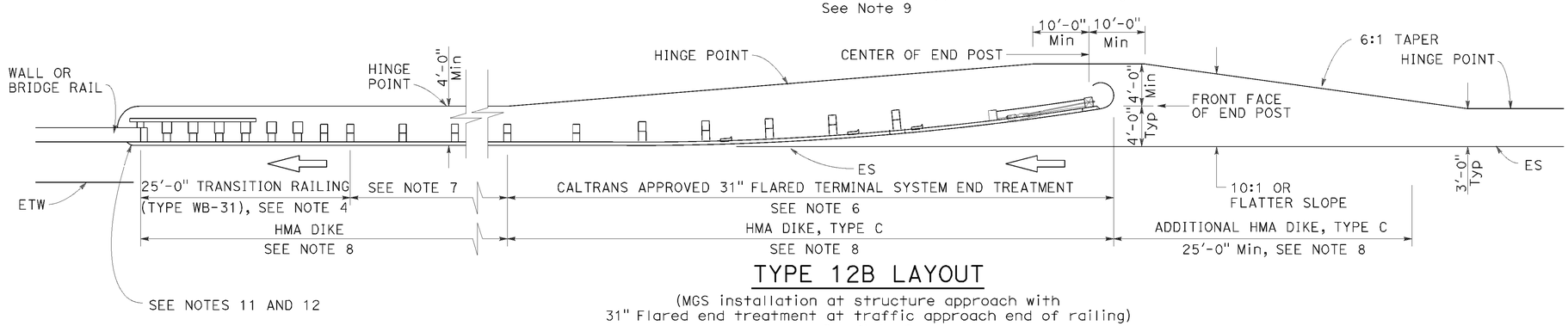

TYPE 12B LAYOUT

(MGS installation at structure approach with
31" Flared end treatment at traffic approach end of railing)
See Note 9

NOTES:

1. Line post, blocks and hardware to be used are shown on Revised Standard Plans RSP A77L1, RSP A77L2, RSP A77M1, RSP A77N1 and RSP A77N2.
2. MGS post spacing to be 6'-3" center to center, except as otherwise noted.
3. Except as noted, line posts are 6" x 8" x 6'-0" wood with 6" x 12" x 1'-2" wood blocks. W6 x 8.5 or W6 x 9 steel posts, 6'-0" in length, with 6" x 12" x 1'-2" notched wood blocks or plastic blocks may be used for 6" x 8" x 6'-0" wood posts with 6" x 12" x 1'-2" wood blocks where applicable and when specified.
4. For Transition Railing (Type WB-31) details for Types 12A and 12B Layouts, see Revised Standard Plan RSP A77U4.
5. 31" in-line terminal system end treatments are used where site conditions will not accommodate a 31" flared end treatment.
6. The type of 31" terminal system end treatment to be used will be shown on the Project Plans.
7. Dependent on site conditions (embankment height, side slopes, or other fixed objects), it may be advisable to construct additional guard railing (a length equal to multiples of 12'-6" with 6'-3" post spacing) between the transition railing and end treatment. A 12.5 degree angle of departure can be drawn on the Project Plans from the edge of traveled way through the outer most point of the fixed object to determine the additional length of railing needed.
8. Where placement of dike is required with guard railing installations, see Revised Standard Plan RSP A77N4 for dike positioning details.
9. Type 12A or Type 12B Layouts are typically used:
   a. To the right of approaching traffic, at the end of a structure, on two-lane conventional highway where the roadbed width across the structure is less than 40 feet.
   b. To the left of approaching traffic, at the end of a structure, on two-lane conventional highway where the roadbed width across the structure is less than 40 feet.
   c. To the right of approaching traffic at the end of each structure on multilane freeways or expressways with separate adjacent or parallel bridges.
   d. To the right of approaching traffic at the end of the structure on multilane freeways or expressways with decked median on the bridge.
10. See Revised Standard Plan RSP A77Q3 for typical layout used left of approaching traffic at the ends of each structure on multilane freeways or expressways with separate adjacent or parallel bridges.
11. For additional details of typical connections to bridge rail, see Connection Detail AA on Revised Standard Plans RSP A77U1 and RSP A77U2 and Connection Detail FF on Revised Standard Plans RSP A77V1 and RSP A77V2.
12. For additional details of a typical connection to walls or abutments, see Revised Standard Plan RSP A77U3.

STATE OF CALIFORNIA
DEPARTMENT OF TRANSPORTATION

MIDWEST GUARDRAIL SYSTEM TYPICAL LAYOUTS FOR STRUCTURE APPROACH

NO SCALE

RSP A77Q1 DATED AUGUST 14, 2015 SUPERSEDES RSP A77Q1 DATED JULY 19, 2013 THAT SUPPLEMENTS THE STANDARD PLANS BOOK DATED 2010.

REVISED STANDARD PLAN RSP A77Q1

2010 REVISED STANDARD PLAN RSP A77Q1

DATE PLOTTED => 16-AUG-2016
TIME PLOTTED => 10:21

Dist	COUNTY	ROUTE	POST MILES TOTAL PROJECT	SHEET No.	TOTAL SHEETS
01	Men	162	13.9,22.7	32	59

Randell D. Hiatt
REGISTERED CIVIL ENGINEER

August 14, 2015
PLANS APPROVAL DATE

REGISTERED PROFESSIONAL ENGINEER
Randell D. Hiatt
No. C50200
Exp. 6-30-17
CIVIL
STATE OF CALIFORNIA

THE STATE OF CALIFORNIA OR ITS OFFICERS OR AGENTS SHALL NOT BE RESPONSIBLE FOR THE ACCURACY OR COMPLETENESS OF SCANNED COPIES OF THIS PLAN SHEET.

TO ACCOMPANY PLANS DATED 06-13-16

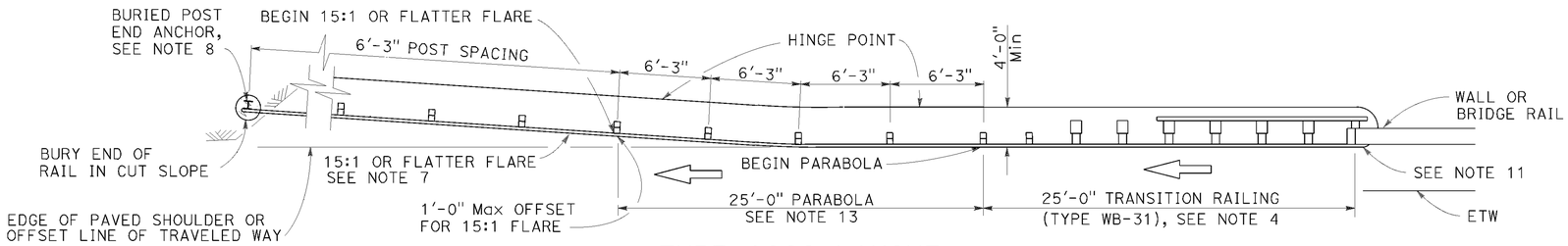

TYPE 12CC LAYOUT

(MGS installation at structure departure with a Buried end anchor treatment at trailing end of railing)
See Notes 9 and 10

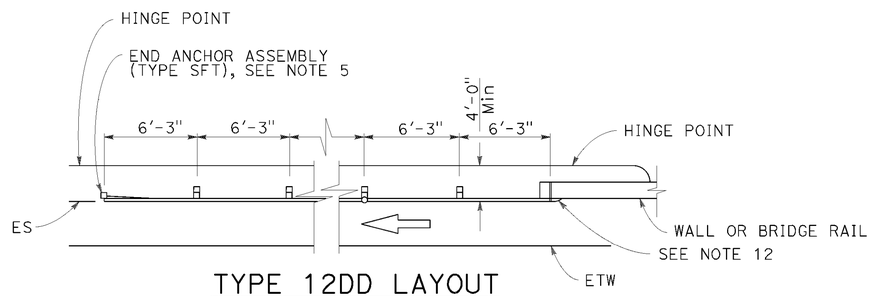

TYPE 12DD LAYOUT

(MGS installation at structure departure With end anchor assembly at trailing end of railing)
See Notes 6 and 9

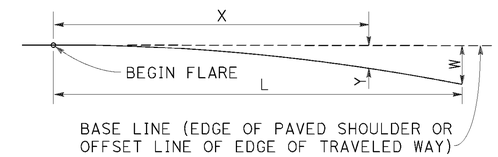

$$Y = \frac{WX^2}{L^2}$$

Y = OFFSET FROM BASE LINE
W = MAXIMUM OFFSET
X = DISTANCE ALONG BASE LINE
L = LENGTH OF FLARE

PARABOLIC FLARE OFFSETS

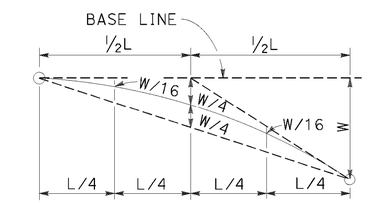

TYPICAL PARABOLIC LAYOUT

NOTES:

1. Line post, blocks and hardware to be used are shown on Revised Standard Plans RSP A77L1, RSP A77L2, RSP A77M1, RSP A77N1 and RSP A77N2.
2. MSG post spacing to be 6'-3" center to center, except as otherwise noted.
3. Except as noted, line posts are 6" x 8" x 6'-0" wood with 6" x 12" x 1'-2" wood blocks. W6 x 8.5 or W6 x 9 steel posts, 6'-0" in length, with 6" x 12" x 1'-2" notched wood blocks or notched recycled plastic blocks may be used for 6" x 8" x 6'-0" wood line posts with 6" x 12" x 1'-2" wood blocks where applicable and when specified.
4. For Transition Railing (Type WB-31) details for Type 12CC Layout, see Revised Standard Plan RSP A77U4.
5. For details of End Anchor Assembly (Type SFT) used with Type 12DD Layout, see Revised Standard Plan RSP A77S1.
6. Type 12DD layout is typically used to the right of traffic departing a structure on two-way conventional highways where the roadbed width across the structure is equal to or greater than 40 feet and MGS is recommended (embankment height, side slopes, other fixed objects). Length of railing to be equal to multiples of 12'-6". For MGS connection details to bridge rail, see Revised Standard Plans RSP A77U1 and RSP A77V1. For MGS connection details to wall, see Revised Standard Plan RSP A77U3.
7. The 15:1 or flatter flare for Type 12CC Layout is based on the edge of the paved shoulder or offset line of edge of the traveled way. The length of MGS within the 15:1 or flatter flare is based on site conditions and should be a length equal to multiples of 12'-6".
8. For details of the buried post end anchor used with Type 12CC Layout, see Revised Standard Plan RSP A77T2.
9. Where placement of dike is required with MGS installations, see Revised Standard Plan RSP A77N4 for dike positioning details.
10. Type 12CC Layout is typically used to the right of traffic departing a structure on two-way conventional highways where the roadbed width across the structure is less than 40 feet.
11. For additional details of a typical connection to bridge rail for Layout Type 12CC, see Connection Detail CC on Revised Standard Plan RSP A77U2 and Connection Detail HH on Revised Standard Plan RSP A77V2.
12. For additional details of a typical connection to bridge rail for Layout Type 12DD, see Connection Detail BB on Revised Standard Plan RSP A77U1 and Connection Detail GG on Revised Standard Plan RSP A77V1.
13. For typical flare offsets for 25'-0" length parabola with maximum offset of 1'-0", see Revised Standard Plan RSP A77P1.

STATE OF CALIFORNIA
DEPARTMENT OF TRANSPORTATION

MIDWEST GUARDRAIL SYSTEM TYPICAL LAYOUTS FOR STRUCTURE DEPARTURE

NO SCALE

RSP A77Q5 DATED AUGUST 14, 2015 SUPERSEDES RSP A77Q5 DATED JULY 19, 2013 THAT SUPPLEMENTS THE STANDARD PLANS BOOK DATED 2010.

REVISED STANDARD PLAN RSP A77Q5

2010 REVISED STANDARD PLAN RSP A77Q5

DATE PLOTTED => 16-AUG-2016
TIME PLOTTED => 10:21

Dist	COUNTY	ROUTE	POST MILES TOTAL PROJECT	SHEET No.	TOTAL SHEETS
01	Men	162	13.9,22.7	33	59

Randell D. Hiatt
REGISTERED CIVIL ENGINEER

November 15, 2013
PLANS APPROVAL DATE

REGISTERED PROFESSIONAL ENGINEER
Randell D. Hiatt
No. C50200
Exp. 6-30-15
CIVIL
STATE OF CALIFORNIA

THE STATE OF CALIFORNIA OR ITS OFFICERS OR AGENTS SHALL NOT BE RESPONSIBLE FOR THE ACCURACY OR COMPLETENESS OF SCANNED COPIES OF THIS PLAN SHEET.

TO ACCOMPANY PLANS DATED 06-13-16

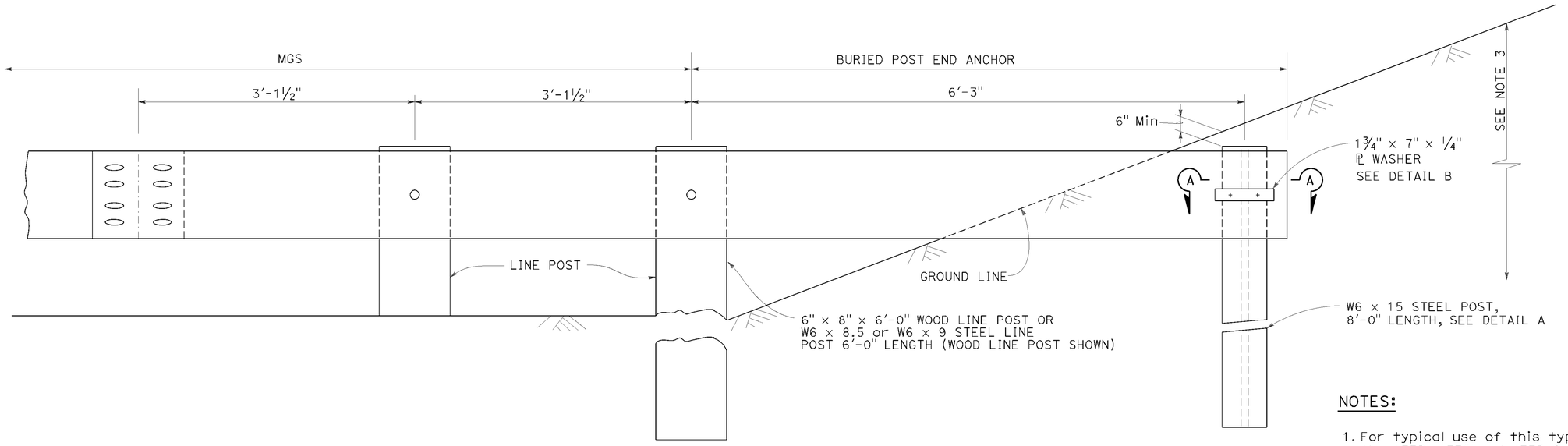

BURIED POST END ANCHOR

See Note 3

NOTES:

1. For typical use of this type of end anchor with MGS see the A77P, A77Q and A77R Series of the Standard Plans.
2. Holes excavation in the slope to construct the buried post end anchor shall be backfilled with selected earth, placed in layers approximately 1'-0" thick. Each layer shall be moistened and thoroughly compacted.
3. The buried post end anchor shall only be constructed at those locations where the slope perpendicular to the roadway is non-traversable.

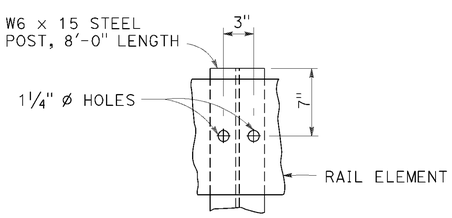

DETAIL A

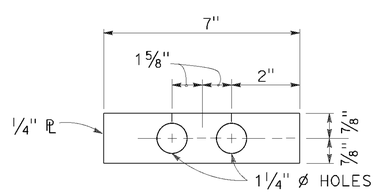

DETAIL B

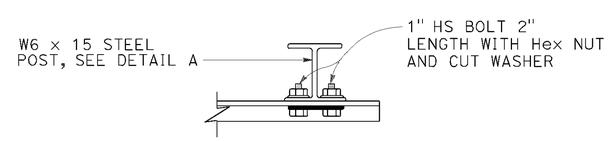

SECTION A-A

STATE OF CALIFORNIA
DEPARTMENT OF TRANSPORTATION

MIDWEST GUARDRAIL SYSTEM BURIED POST END ANCHOR

NO SCALE

RSP A77T2 DATED NOVEMBER 15, 2013 SUPERSEDES RSP A77T2
DATED JULY 19, 2013 THAT SUPPLEMENTS THE STANDARD PLANS BOOK DATED 2010.

REVISED STANDARD PLAN RSP A77T2

2010 REVISED STANDARD PLAN RSP A77T2

DATE PLOTTED => 16-AUG-2016
TIME PLOTTED => 10:21

Dist	COUNTY	ROUTE	POST MILES TOTAL PROJECT	SHEET No.	TOTAL SHEETS
01	Men	162	13.9,22.7	34	59

Randell D. Hiatt
REGISTERED CIVIL ENGINEER

January 23, 2015
PLANS APPROVAL DATE

REGISTERED PROFESSIONAL ENGINEER
Randell D. Hiatt
No. C50200
Exp. 6-30-15
CIVIL
STATE OF CALIFORNIA

THE STATE OF CALIFORNIA OR ITS OFFICERS OR AGENTS SHALL NOT BE RESPONSIBLE FOR THE ACCURACY OR COMPLETENESS OF SCANNED COPIES OF THIS PLAN SHEET.

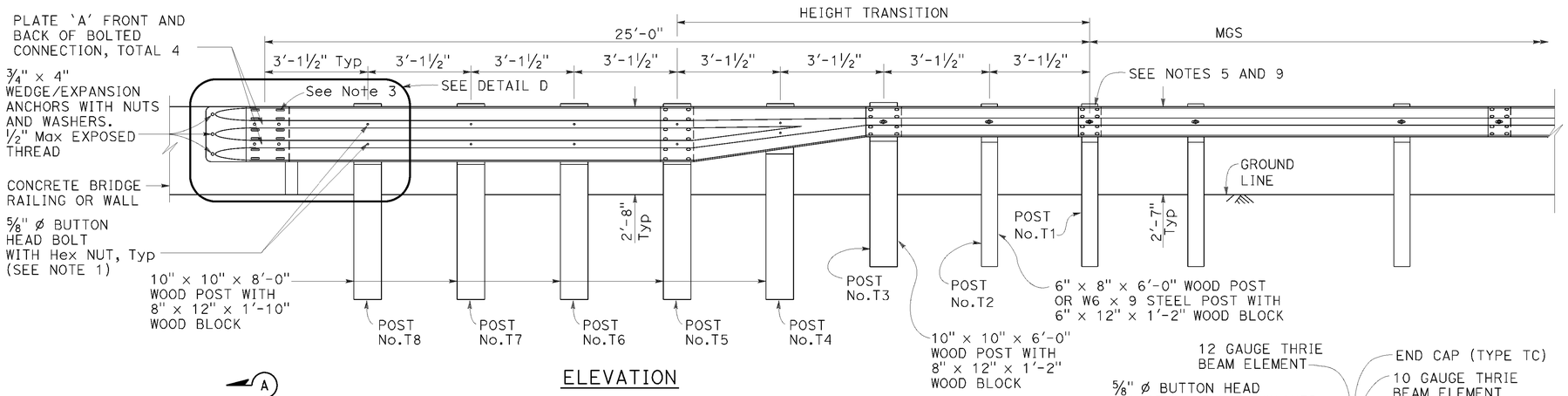

ELEVATION

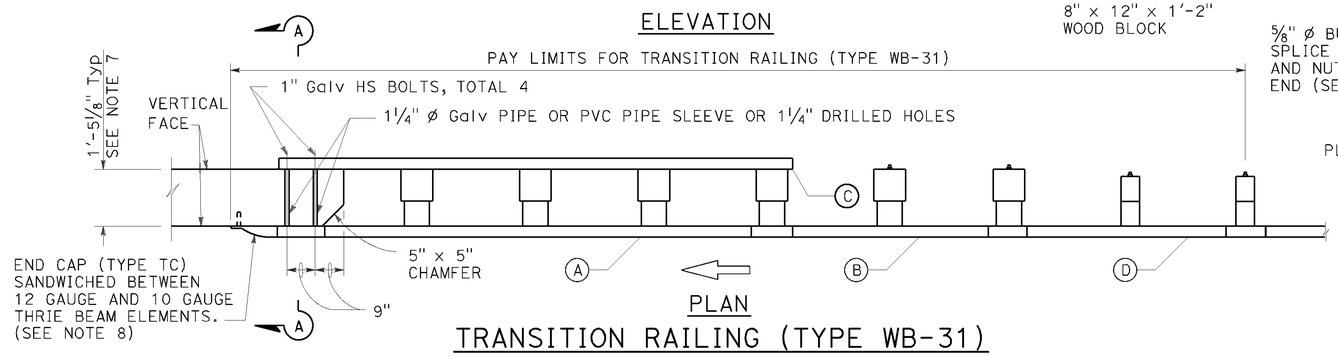

PLAN

TRANSITION RAILING (TYPE WB-31)

(No Blockout Attachment)

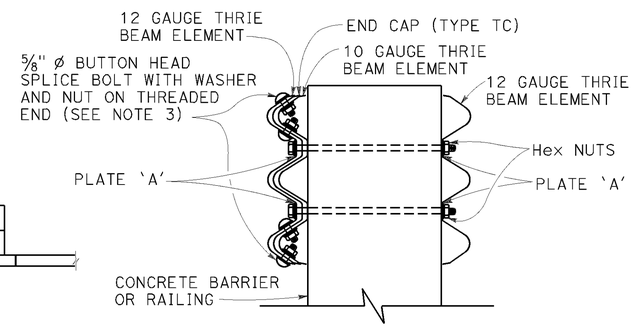

SECTION A-A

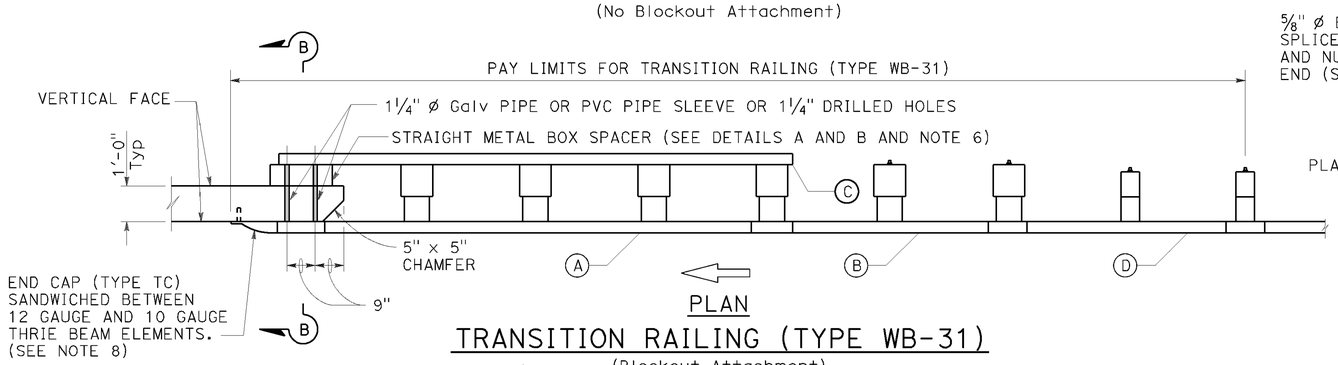

PLAN

TRANSITION RAILING (TYPE WB-31)

(Blockout Attachment)

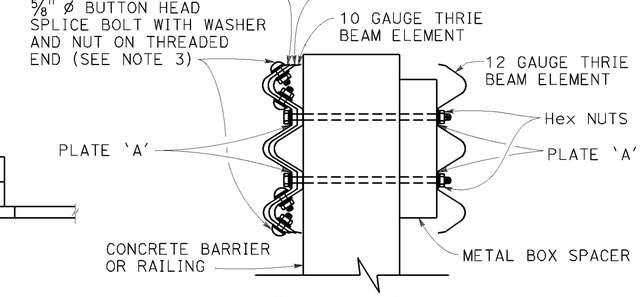

SECTION B-B

NOTES:

TO ACCOMPANY PLANS DATED 06-13-16

1. Use 5/8" ø Button head bolts and hex nuts for connections to posts. No washer on rail face for bolted connections to post.
2. The nested rail elements, end cap, and 'W' beam to thrie beam element may be spliced together prior to bolting the elements to the wood post and concrete barrier or railing.
3. Exterior splice bolt holes for rail element splices at Post No. T5 and the connection to the concrete barrier or railing shall be the standard 29/32" x 1 1/8" slot size. Interior splice bolt holes at these locations may be increased up to 1 1/4" ø. Only the top 4 and the bottom 4 splice bolts with washers and nuts are required for rail splices at Post No. T5 and the connection to the concrete barrier or railing.
4. The top elevation of Posts No. T2 through No. T7 shall not project more than 1" above the top elevation of the rail element.
5. Typically, the railing connected to Transition Railing (Type WB-31) will be either standard railing section of MGS with height transition ratio of 150:1 or a Caltrans approved 31" end treatment attached to Post No. T1.
6. The depth of the metal box spacer varies from the 9 1/8" to 1 1/2" and is dependent on the width of the concrete railing or wall. The combined dimension for the depth of the metal box spacer plus the width of railing or wall is typically 21 1/8". Where the space between the backside of the concrete railing or wall and the rear thrie beam element is less than 1 1/2", metal plates similar to Plate 'A' are to be used as spacers.
7. Where the width of the concrete railing or wall is greater than 17 1/8", wood blocks are to be used to fill the space created between the backside of Posts No. T5 through No. T8 and the rear thrie beam element. These wood blocks shall be 8" in width and 1'-2" in length. The dimension between the front thrie beam element and the rear thrie beam element is to match the width of the concrete railing or wall.
8. End cap may be installed over 12 gauge and 10 gauge thrie beam elements where transition railing is installed on the departure end of bridge railing.
9. Conform standard railing section height to 31" at Post No. T1 using height transition ratio of 150:1.

LEGEND:

(A) NESTED THRIE BEAM ELEMENTS (ONE 12 GAUGE ELEMENT NESTED OVER ONE 10 GAUGE ELEMENT).

(B) ONE ASYMMETRICAL 10 GAUGE "W" BEAM TO THRIE BEAM ELEMENT.

(C) ONE 12 GAUGE THRIE BEAM ELEMENT.

(D) ONE 10 GAUGE "W" BEAM RAIL ELEMENT (7'-3 1/2"LENGTH)

10 GAUGE = 0.138" THICK
12 GAUGE = 0.108" THICK

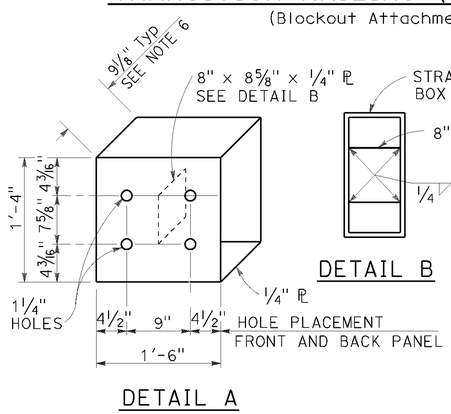

DETAIL A

STRAIGHT METAL BOX SPACER

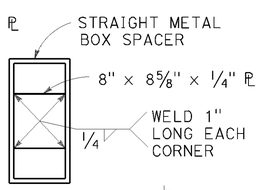

DETAIL B

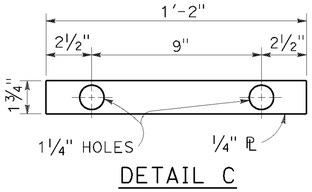

DETAIL C

PLATE 'A'

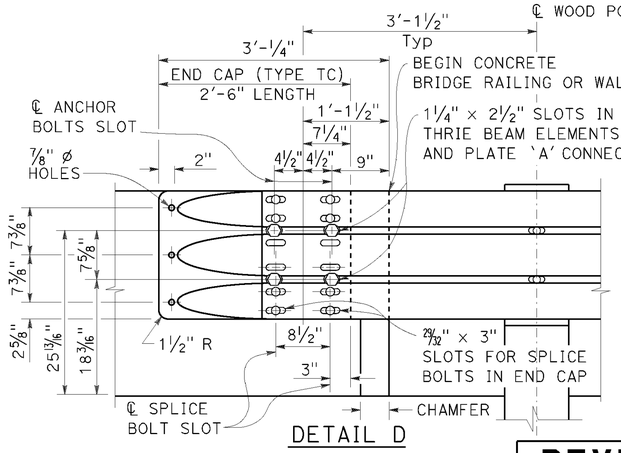

DETAIL D

STATE OF CALIFORNIA
DEPARTMENT OF TRANSPORTATION

MIDWEST GUARDRAIL SYSTEM TRANSITION RAILING (TYPE WB-31)

NO SCALE

RSP A77U4 DATED JANUARY 23, 2015 SUPERSEDES RSP A77U4 DATED NOVEMBER 15, 2013 AND RSP A77U4 DATED JULY 19, 2013 THAT SUPPLEMENTS THE STANDARD PLANS BOOK DATED 2010.

REVISED STANDARD PLAN RSP A77U4

2010 REVISED STANDARD PLAN RSP A77U4

DATE PLOTTED => 16-AUG-2016
TIME PLOTTED => 10:22

Dist	COUNTY	ROUTE	POST MILES TOTAL PROJECT	SHEET No.	TOTAL SHEETS
01	Men	162	13.9,22.7	35	59

REGISTERED CIVIL ENGINEER

July 19, 2013
PLANS APPROVAL DATE

REGISTERED PROFESSIONAL ENGINEER — Tillat Satter, No. C42892, Exp. 3-31-14, CIVIL, STATE OF CALIFORNIA

THE STATE OF CALIFORNIA OR ITS OFFICERS OR AGENTS SHALL NOT BE RESPONSIBLE FOR THE ACCURACY OR COMPLETENESS OF SCANNED COPIES OF THIS PLAN SHEET.

TO ACCOMPANY PLANS DATED 06-13-16

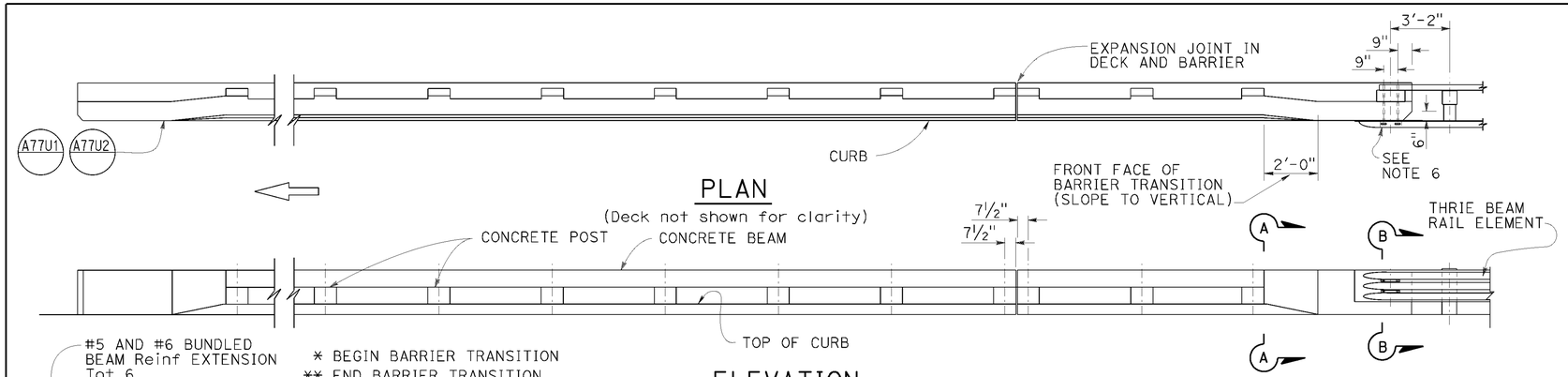

PLAN

(Deck not shown for clarity)

ELEVATION

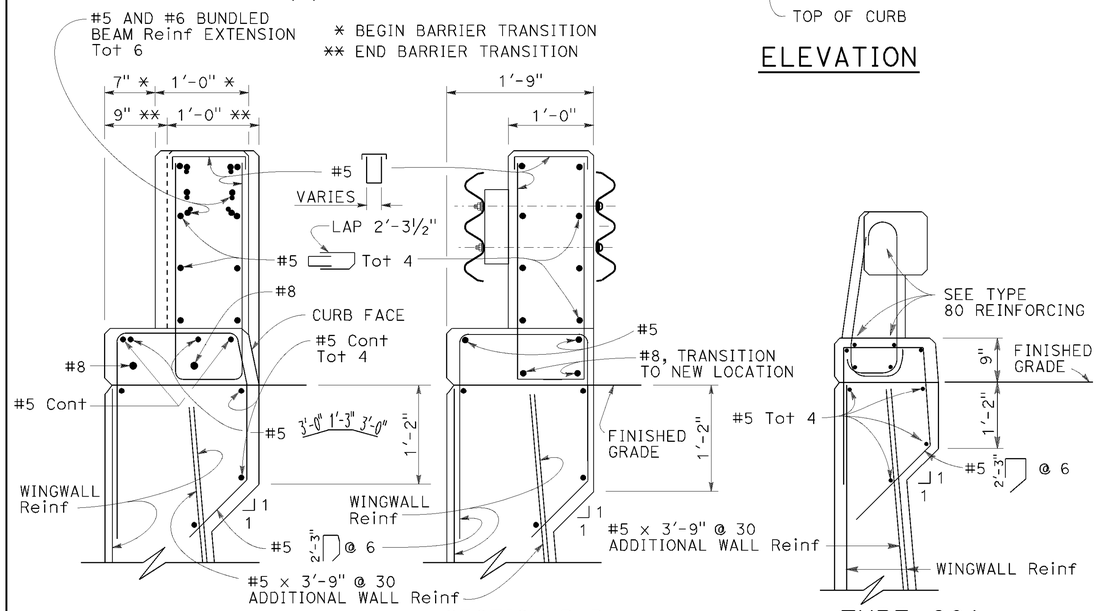

SECTION A-A

SECTION B-B

TYPE 80A

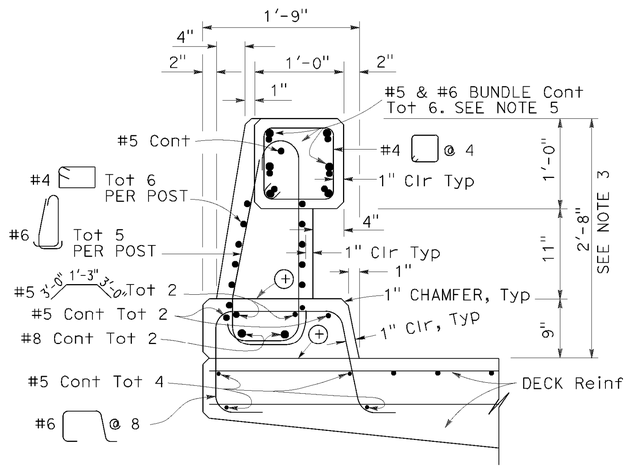

TYPE 80

⊕ Construction joint

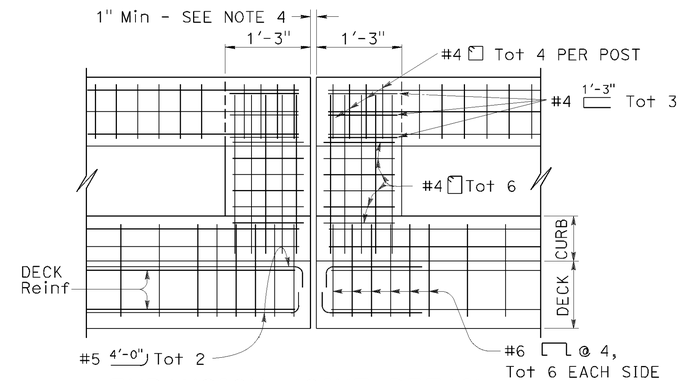

EXPANSION JOINT DETAIL

NOTES:

1. Walls are to be backfilled before the barrier is placed.
2. Longitudinal reinforcing steel to stop at all expansion joints.
3. The front face dimensions are to be constant above the finish roadway profile, but the overall height will vary with certain thicknesses of surfacing and roadway slopes.
4. Expansion joint to match deck joint.
5. No lap splicing allowed on the longitudinal rail reinforcing. Splicing shall be staggered.
6. For typical metal railing connection details not shown, see Revised Standard Plans RSP A77U1 and RSP A77U2.
7. Chain link railing is not allowed on Type 80 Barriers.
8. Post to be spaced equally, typically 6'-6" spacing. Post spacing may be reduced where location of hinges or expansion joints or the length of wingwalls will not accommodate the 6'-6" spacing. Maximum see-through availability is to be strived for, where 6'-6" post spacing can not be achieved.

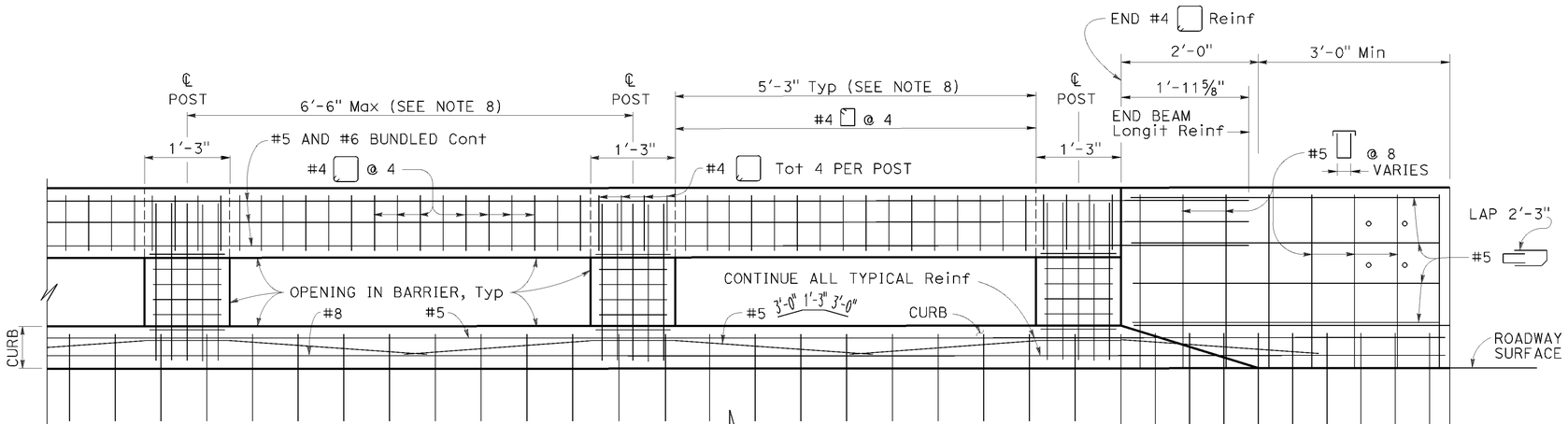

LONGITUDINAL SECTION

(Deck or wingwall reinforcing not shown)

STATE OF CALIFORNIA
DEPARTMENT OF TRANSPORTATION

CONCRETE BARRIER TYPE 80 (SHEET 1 OF 2)

NO SCALE

RSP B11-60 DATED JULY 19, 2013 SUPERSEDES RSP B11-60 DATED APRIL 20, 2012 AND STANDARD PLAN B11-60 DATED MAY 20, 2011 - PAGE 300 OF THE STANDARD PLANS BOOK DATED 2010.

REVISED STANDARD PLAN RSP B11-60

2010 REVISED STANDARD PLAN RSP B11-60

DATE PLOTTED => 16-AUG-2016
TIME PLOTTED => 10:22

Dist	COUNTY	ROUTE	POST MILES TOTAL PROJECT	SHEET No.	TOTAL SHEETS
01	Men	162	13.9,22.7	36	59

Theresa Gabriel
REGISTERED ELECTRICAL ENGINEER

October 30, 2015
PLANS APPROVAL DATE

REGISTERED PROFESSIONAL ENGINEER Theresa Aziz Gabriel No. E15129 Exp. 6-30-16 ELECTRICAL STATE OF CALIFORNIA

THE STATE OF CALIFORNIA OR ITS OFFICERS OR AGENTS SHALL NOT BE RESPONSIBLE FOR THE ACCURACY OR COMPLETENESS OF SCANNED COPIES OF THIS PLAN SHEET.

TO ACCOMPANY PLANS DATED 06-13-16

LEGEND:

AB	ABANDON. IF APPLIED TO CONDUIT, REMOVE CONDUCTORS
BC	INSTALL PULL BOX IN EXISTING CONDUIT RUN
BP	PEDESTRIAN BARRICADE, TYPE AS INDICATED ON PLAN
CB	INSTALL CONDUIT INTO EXISTING PULL BOX
CC	CONNECT NEW AND EXISTING CONDUIT. REMOVE EXISTING CONDUCTORS AND INSTALL CONDUCTORS AS INDICATED
CF	CONDUIT TO REMAIN FOR FUTURE USE. REMOVE CONDUCTORS. INSTALL PULL TAPE
DH	DETECTOR HANDHOLE
FA	FOUNDATION TO BE ABANDONED
IS	INSTALL SIGN ON SIGNAL MAST ARM
NS	NO SLIP BASE ON STANDARD
PEC	PHOTOELECTRIC CONTROL
PEU	PHOTOELECTRIC UNIT
RC	EQUIPMENT OR MATERIAL TO BE REMOVED AND BECOME THE PROPERTY OF THE CONTRACTOR
RE	REMOVE ELECTROLIER, FUSES AND BALLAST. TAPE ENDS OF CONDUCTORS
RL	RELOCATE EQUIPMENT
RR	REMOVE AND REUSE EQUIPMENT
RS	REMOVE AND SALVAGE EQUIPMENT
SC	SPLICE NEW TO EXISTING CONDUCTORS
SD	SERVICE DISCONNECT
TSP	TELEPHONE SERVICE POINT

ABBREVIATIONS

AC+	UNDERGROUNDED CONDUCTOR
APS	ACCESSIBLE PEDESTRIAN SIGNAL
Batt	BATTERY
BBS	BATTERY BACKUP SYSTEM
BC	BOLT CIRCLE
Blk	BLACK
BP	BYPASS
BPB	BICYCLE PUSH BUTTON
C	CONDUIT
CB	CIRCUIT BREAKER
CCTV	CLOSED CIRCUIT TELEVISION
Ckt	CIRCUIT
CMS	CHANGEABLE MESSAGE SIGN
Ctid	CALTRANS IDENTIFICATION
Comm	COMMUNICATION
Cntl	CONTROL
DF	DEPARTMENT-FURNISHED
DLC	LOOP DETECTOR LEAD-IN CABLE
EMS	EXTINGUISHABLE MESSAGE SIGN
EVUC	EMERGENCY VEHICLE UNIT CABLE
EVUD	EMERGENCY VEHICLE UNIT DETECTOR
FB	FLASHING BEACON
FBCA	FLASHING BEACON CONTROL ASSEMBLY
FBS	FLASHING BEACON WITH SLIP BASE
FO	FIBER OPTIC
G	EQUIPMENT GROUNDING CONDUCTOR
GB	GROUND BUS
GFCI	GROUND FAULT CIRCUIT INTERRUPTER
Grn	GREEN
HAR	HIGHWAY ADVISORY RADIO
Hex	HEXAGONAL
HPS	HIGH PRESSURE SODIUM
IISNS	INTERNALLY ILLUMINATED STREET NAME SIGN
ISL	INDUCTION SIGN LIGHTING
LED	LIGHT EMITTING DIODE
LMA	LUMINAIRE MAST ARM
LPS	LOW PRESSURE SODIUM
Ltg	LIGHTING
Lum	LUMINAIRE
M	METERED
MAT	MAST ARM MOUNTING TOP ATTACHMENT
MAS	MAST ARM MOUNTING SIDE ATTACHMENT
MBPS	MANUAL BYPASS SWITCH
M/M	MULTIPLE TO MULTIPLE TRANSFORMER
Mtg	MOUNTING
MV	MERCURY VAPOR LIGHTING FIXTURE
MVDS	MICROWAVE VEHICLE DETECTION SYSTEM
N	NEUTRAL (GROUNDED CONDUCTOR)
NB	NEUTRAL BUS
NC	NORMALLY CLOSE
NO	NORMALLY OPEN
P	CIRCUIT BREAKER'S POLE
PB	PULL BOX
PBA	PUSH BUTTON ASSEMBLY
PEC	PHOTOELECTRIC CONTROL
Ped	PEDESTRIAN
PEU	PHOTOELECTRIC UNIT
PT	CONDUIT WITH PULL TAPE
PTR	POWER TRANSFER RELAY
RE	RELOCATED EQUIPMENT
RM	RAMP METERING
RWIS	ROADSIDE WEATHER INFORMATION SYSTEM
SB	SLIP BASE
SIC	SIGNAL INTERCONNECT CABLE
Sig	SIGNAL
SMA	SIGNAL MAST ARM
SNS	STREET NAME SIGN
SP	SERVICE POINT
TB	TERMINAL BOARD
TDC	TELEPHONE DEMARCATION CABINET
Temp	TEMPERATURE
TMS	TRAFFIC MONITORING STATION
TOS	TRAFFIC OPERATIONS SYSTEM
UPS	UNINTERRUPTABLE POWER SUPPLY
UPSC	UNINTERRUPTABLE POWER SUPPLY CONTROLLER
Veh	VEHICLE
VIVDS	VIDEO IMAGE VEHICLE DETECTION SYSTEM
Wht	WHITE
WIM	WEIGH-IN-MOTION
Xfmr	TRANSFORMER

SOFFIT AND WALL-MOUNTED LUMINAIRES

- PENDANT SOFFIT LUMINAIRE, 70 W HPS UNLESS OTHERWISE SPECIFIED
- FLUSH-MOUNTED SOFFIT LUMINAIRE, 70 W HPS UNLESS OTHERWISE SPECIFIED
- WALL-MOUNTED LUMINAIRE, 70 W HPS UNLESS OTHERWISE SPECIFIED
- EXISTING SOFFIT OR WALL-MOUNTED LUMINAIRE TO REMAIN UNMODIFIED
- EXISTING SOFFIT OR WALL-MOUNTED LUMINAIRE TO BE MODIFIED AS SPECIFIED

NOTE:
Arrow indicates "street side" of luminaire.

COMMONLY USED SYMBOLS FOR UNITED STATES CUSTOMARY UNITS OF MEASUREMENT:

SYMBOL	DEFINITIONS
Ω	OHMS
min	MINUTE
s	SECOND
bps	BITS PER SECOND
Bps	BYTES PER SECOND
A	AMPERE
V	VOLT
V(dc)	VOLT (DIRECT CURRENT)
V(ac)	VOLT (ALTERNATING CURRENT)
FC	FOOT - CANDLE
W	WATTS
VA	VOLT-AMPERE
M	MEGA
k	KILO
m	MILLI
μ	MICRO
P	PICO
Hz	HERTZ

MISCELLANEOUS ELECTROLIERS

NEW	EXISTING	
		LUMINAIRE ON WOOD POLE
		NON-STANDARD ELECTROLIER (SEE PROJECT LEGEND)
		CITY ELECTROLIER
		ELECTROLIER FOUNDATION (FUTURE INSTALLATION)

NOTES:

1. LED luminaires shall be 235 W when installed on Type 21, 21D, 30, 31 and 32 Standards, unless otherwise specified. LED luminaires shall be 165 W when installed on other type standards or poles, unless otherwise specified.
2. Luminaires shall be the cutoff type, ANSI Type III medium cutoff lighting distribution, unless otherwise specified.

STANDARD ELECTROLIER

NEW	EXISTING	STANDARD TYPE
		15
		15D
		15 STRUCTURE
		15D STRUCTURE
		21
		21D
		21 STRUCTURE
		21D STRUCTURE
		30
		31
		32

STATE OF CALIFORNIA
DEPARTMENT OF TRANSPORTATION

ELECTRICAL SYSTEMS (LEGEND AND ABBREVIATIONS)

NO SCALE

RSP ES-1A DATED OCTOBER 30, 2015 SUPERSEDES RSP ES-1A DATED JULY 19, 2013 AND STANDARD PLAN ES-1A DATED MAY 20, 2011 - PAGE 425 OF THE STANDARD PLANS BOOK DATED 2010.

REVISED STANDARD PLAN RSP ES-1A

2010 REVISED STANDARD PLAN RSP ES-1A

DATE PLOTTED => 16-AUG-2016
TIME PLOTTED => 10:22

Dist	COUNTY	ROUTE	POST MILES TOTAL PROJECT	SHEET No.	TOTAL SHEETS
01	Men	162	13.9,22.7	37	59

Theresa Gabriel
REGISTERED ELECTRICAL ENGINEER

October 30, 2015
PLANS APPROVAL DATE

REGISTERED PROFESSIONAL ENGINEER Theresa Aziz Gabriel No. E15129 Exp. 6-30-16 ELECTRICAL STATE OF CALIFORNIA

THE STATE OF CALIFORNIA OR ITS OFFICERS OR AGENTS SHALL NOT BE RESPONSIBLE FOR THE ACCURACY OR COMPLETENESS OF SCANNED COPIES OF THIS PLAN SHEET.

TO ACCOMPANY PLANS DATED 06-13-16

CONDUIT

NEW	EXISTING	
		LIGHTING CONDUIT, UNLESS OTHERWISE INDICATED OR NOTED
		TRAFFIC SIGNAL CONDUIT
C	c	COMMUNICATION CONDUIT
T	t	TELEPHONE CONDUIT
F	f	FIRE ALARM CONDUIT
FO	fo	FIBER OPTIC CONDUIT
		CONDUIT TERMINATION
R	r	CONDUIT RISER ATTACHED TO THE STRUCTURE OR SERVICE POLE

SERVICE EQUIPMENT

NEW	EXISTING	
OH	oh	OVERHEAD LINES
U	U	WOOD POLE, "U" INDICATES UTILITY OWNED
		POLE GUY WITH ANCHOR
		UTILITY TRANSFORMER - GROUND MOUNTED
III	III	SERVICE EQUIPMENT ENCLOSURE TYPE. DOOR INDICATES FRONT OF ENCLOSURE
T	t	TELEPHONE DEMARCATION CABINET

POLE-MOUNTED SERVICE DESIGNATION

TYPE H SERVICE, 28'-10" — TYPE OF INSTALLATION AND POLE HEIGHT ABOVE GRADE

FLASHING BEACON

NEW	EXISTING	
R	R	FLASHING BEACON (ONE VEHICLE SIGNAL HEAD WITH BACKPLATE AND VISOR) "R" INDICATES RED INDICATION, "Y" INDICATES YELLOW INDICATION
Y Y	Y Y	FLASHING BEACON WITH TYPE 15-FBS STANDARD AND A SIGN.
R R	R R	FLASHING BEACON WITH TYPES 9, 9A OR 9B SIGN UNLESS OTHERWISE SPECIFIED OR INDICATED

SIGNAL EQUIPMENT

NEW	EXISTING	
		PEDESTRIAN SIGNAL HEAD
		PUSH BUTTON ASSEMBLY POST
		PEDESTRIAN BARRICADE
		VEHICLE SIGNAL HEAD (WITH BACKPLATE AND 3-SECTIONS: RED, YELLOW AND GREEN)
		VEHICLE SIGNAL HEAD WITH ANGLE VISOR
PV	PV	MODIFICATIONS OF BASIC SYMBOL: "L" INDICATES ALL NON-ARROW SECTIONS LOUVERED "LG" INDICATES LOUVERED GREEN SECTION ONLY "PV" INDICATES ALL 12" SECTIONS PROGRAMMED VISIBILITY "8" INDICATES ALL 8" SECTIONS (ONLY WHEN SPECIFIED)
		VEHICLE SIGNAL HEAD CONSISTING OF RED, YELLOW AND GREEN LEFT ARROW SECTIONS
		VEHICLE SIGNAL HEAD CONSISTING OF RED AND YELLOW SECTIONS WITH AN UP GREEN ARROW SECTION
		VEHICLE SIGNAL HEAD (5 SECTION) CONSISTING OF RED, YELLOW AND GREEN SECTIONS WITH YELLOW AND GREEN RIGHT ARROW SECTIONS
		TYPE 15TS STANDARD WITH VEHICLE SIGNAL HEAD AND LUMINAIRE
		TYPE 21TS STANDARD WITH VEHICLE SIGNAL HEAD AND LUMINAIRE
		STANDARD WITH LUMINAIRE AND SIGNAL MAST ARMS AND ATTACHED VEHICLE SIGNAL HEADS
		TYPE 1 STANDARD WITH ATTACHED VEHICLE SIGNAL HEADS
		STANDARD WITH A SIGNAL MAST ARM, ATTACHED VEHICLE SIGNAL HEADS AND INTERNALLY ILLUMINATED STREET NAME SIGN
		CONTROLLER ASSEMBLY. DOOR INDICATES FRONT OF CABINET

SIGNAL EQUIPMENT Cont

NEW	EXISTING	
		GUARD POST
		TYPE 1 STANDARD WITH RAMP METERING SIGN
		OPTICAL DETECTOR FOR THE EMERGENCY VEHICLE DETECTION

NOTES:

1. All signal sections shall be 12" unless shown otherwise.
2. Signal heads shall be provided with backplates unless shown otherwise.

ILLUMINATED OVERHEAD SIGN

NEW	EXISTING	
		SINGLE POST, SINGLE ILLUMINATED SIGN, BALANCED BUTTERFLY
		SINGLE POST, DOUBLE ILLUMINATED SIGN, BALANCED BUTTERFLY
		SINGLE POST, SINGLE ILLUMINATED SIGN, FULL CANTILEVER
		DOUBLE POST, SINGLE ILLUMINATED SIGN
		SINGLE ILLUMINATED SIGN MOUNTED ON STRUCTURE
		DOUBLE POST, SINGLE ILLUMINATED SIGN WITH ELECTROLIER

STATE OF CALIFORNIA
DEPARTMENT OF TRANSPORTATION

ELECTRICAL SYSTEMS (LEGEND AND ABBREVIATIONS)

NO SCALE

RSP ES-1B DATED OCTOBER 30, 2015 SUPERSEDES RSP ES-1B DATED JULY 19, 2013 AND STANDARD PLAN ES-1B DATED MAY 20, 2011 - PAGE 426 OF THE STANDARD PLANS BOOK DATED 2010.

REVISED STANDARD PLAN RSP ES-1B

2010 REVISED STANDARD PLAN RSP ES-1B

DATE PLOTTED => 16-AUG-2016
TIME PLOTTED => 10:22

Dist	COUNTY	ROUTE	POST MILES TOTAL PROJECT	SHEET No.	TOTAL SHEETS
01	Men	162	13.9,22.7	38	59

Theresa Gabriel
REGISTERED ELECTRICAL ENGINEER

April 15, 2016
PLANS APPROVAL DATE

REGISTERED PROFESSIONAL ENGINEER Theresa Aziz Gabriel No. E15129 Exp. 6-30-16 ELECTRICAL STATE OF CALIFORNIA

THE STATE OF CALIFORNIA OR ITS OFFICERS OR AGENTS SHALL NOT BE RESPONSIBLE FOR THE ACCURACY OR COMPLETENESS OF SCANNED COPIES OF THIS PLAN SHEET.

TO ACCOMPANY PLANS DATED 06-13-16

EQUIPMENT IDENTIFICATION

ILLUMINATED SIGN IDENTIFICATION:

SIGN No. 12345 — SIGN EQUIPMENT IDENTIFICATION CHARACTERS - PLACE ON POST OR STRUCTURE

10 ISL SCI 1.0

- 1.0 — TRANSFORMER RATING (kVA)
- SCI — LIGHTING CONTROL TYPE
- ISL — NUMBER AND TYPE OF FIXTURES

DO NOT PLACE ON STANDARD OR STRUCTURE

ELECTROLIER OR EQUIPMENT IDENTIFICATION:

L2745 - 15'-0"

- 15'-0" — MAST ARM LENGTH, IF SHOWN. DO NOT PLACE ON STANDARD OR STRUCTURE
- L2745 — EQUIPMENT IDENTIFICATION CHARACTERS - PLACE ON STANDARD OR STRUCTURE. EXISTING EQUIPMENT IDENTIFICATION CHARACTERS ARE SHOWN IN PARENTHESIS

CONDUIT AND CONDUCTOR IDENTIFICATION:

1½"C, 2#10, 15#14, 2 DLC, 12P#18

- PAIR
- 2#10, 15#14, 2 DLC, 12P#18 — NUMBER AND SIZE OF CONDUCTORS AND CABLES
- 1½"C — SIZE OF CONDUIT IN INCHES

Ø1, Ø2, Ø2P, etc.	TRAFFIC PHASE IDENTIFICATION FOR SIGNALS, DETECTORS AND PHASE DIAGRAMS
1 2 3	LEGEND NUMBERS
A B C	EQUIPMENT, SIGNAL POLES, INSTALLATION OR ITEMS
1 2 3	CONDUIT RUN NUMBERS

SIGNAL AND LIGHTING STANDARD (TYPICAL DESIGNATION):

19A - 3 - 100

- 100 — WIND VELOCITY = 100 mph
- 3 — CASE 3 ARM LOADING
- 19A — STANDARD TYPE
- STANDARD PLAN SHEET NUMBER
- DETAIL, NUMBER, SECTION, TYPE OR ELEVATION

MISCELLANEOUS EQUIPMENT

NEW	EXISTING	
CMS	cms	CHANGEABLE MESSAGE SIGN
		CLOSED CIRCUIT TELEVISION CAMERA
		HIGHWAY ADVISORY RADIO POLE AND ANTENNA
EMS	ems	LED EXTINGUISHABLE MESSAGE SIGN
M V	m v	DETECTION DEVICE M = MICROWAVE SENSOR V = VIDEO IMAGE SENSOR

WIRING DIAGRAM LEGEND

- EXTERNAL CONDUCTOR
- CONDUCTOR OR BUS
- TIE POINT
- CONTACTOR COIL
- CONTACTOR, NO CONTACT
- TERMINAL BLOCKS
- CONTACTOR, NC CONTACT
- ENCLOSURE BOND
- GROUNDING ELECTRODE
- CIRCUIT BREAKER
- RECEPTACLE

PULL BOXES

NEW	EXISTING	
		PULL BOX, No. 5 UNLESS OTHERWISE INDICATED OR NOTED
3	9A(21)	PULL BOX, ADDITIONAL DESIGNATIONS OR DESCRIPTIONS

3 No. 3½ PULL BOX
5 No. 5 PULL BOX
6 No. 6 PULL BOX
7 No. 7 PULL BOX (CEILING)
8 No. 8 PULL BOX
9 No. 9 PULL BOX (STRUCTURE)
9A No. 9A PULL BOX (STRUCTURE)

(C) COMMUNICATIONS PULL BOX
(E) PULL BOX WITH EXTENSION
(S) SPRINKLER CONTROL PULL BOX
(21) ANCHOR BOLTS AND CONDUIT FOR FUTURE INSTALLATION OF TYPE 21 STANDARD
(T) TRAFFIC PULL BOX

VEHICLE DETECTORS

5 J 9 U

- VEHICLE DETECTOR DESIGNATION
- U = UPPER
  L = LOWER
- SLOT NUMBER IN INPUT FILE
- INPUT FILE (I OR J)
- PHASE

NEW	EXISTING	
		TYPE A LOOP DETECTOR. OUTLINE OF SAW CUT SHOWN
		TYPE B LOOP DETECTOR. OUTLINE OF SAW CUT SHOWN
		TYPE C LOOP DETECTOR. OUTLINE OF SAW CUT SHOWN
		TYPE D LOOP DETECTOR. OUTLINE OF SAW CUT SHOWN
		TYPE E LOOP DETECTOR. OUTLINE OF SAW CUT SHOWN
		TYPE Q LOOP DETECTOR. OUTLINE OF SAW CUT SHOWN
DH	dh	DETECTOR HANDHOLE
		MICROWAVE OR VIDEO DETECTION ZONE

STATE OF CALIFORNIA
DEPARTMENT OF TRANSPORTATION

ELECTRICAL SYSTEMS (LEGEND AND ABBREVIATIONS)

NO SCALE

RSP ES-1C DATED APRIL 15, 2016 SUPERSEDES RSP ES-1C DATED OCTOBER 30, 2015 AND RSP ES-1C DATED JULY 19, 2013 AND STANDARD PLAN ES-1C DATED MAY 20, 2011 - PAGE 427 OF THE STANDARD PLANS BOOK DATED 2010.

REVISED STANDARD PLAN RSP ES-1C

2010 REVISED STANDARD PLAN RSP ES-1C

DATE PLOTTED => 16-AUG-2016
TIME PLOTTED => 10:22

Dist	COUNTY	ROUTE	POST MILES TOTAL PROJECT	SHEET No.	TOTAL SHEETS
01	Men	162	13.9,22.7	39	59

Gregory A. Balzer
LICENSED LANDSCAPE ARCHITECT

July 19, 2013
PLANS APPROVAL DATE

LICENSED LANDSCAPE ARCHITECT Gregory A. Balzer 2576 Gregory A. Balzer C.E. Expiration Date 2-28-15 Renewal Date 7-19-13 Date STATE OF CALIFORNIA

THE STATE OF CALIFORNIA OR ITS OFFICERS OR AGENTS SHALL NOT BE RESPONSIBLE FOR THE ACCURACY OR COMPLETENESS OF SCANNED COPIES OF THIS PLAN SHEET.

TO ACCOMPANY PLANS DATED 06-13-16

A

AB	AGGREGATE BASE
ABS	ACRYLONITRILE-BUTADIENE-STYRENE
AC	ASPHALT CONCRETE
ACC	ARMOR-CLAD CONDUCTORS
Adj	ADJACENT/ADJUSTABLE
AIC	AUXILIARY IRRIGATION CONTROLLER
Alt	ALTERNATIVE
AMEND	AMENDMENT
ARV	AIR RELEASE VALVE
AUTO	AUTOMATIC
AUX	AUXILIARY
AVB	ATMOSPHERIC VACUUM BREAKER

B

B&B	BALLED AND BURLAPPED
B/B	BRASS/BRONZE
B/B/PL	BRASS/BRONZE/PLASTIC
B/PL	BRASS/PLASTIC
BFM	BONDED FIBER MATRIX
Bit Ctd	BITUMINOUS COATED
BP	BOOSTER PUMP
BPA	BACKFLOW PREVENTER ASSEMBLY
BPE	BACKFLOW PREVENTER ENCLOSURE
BV	BALL VALVE

C

C	CONDUIT
CAP	CORRUGATED ALUMINUM PIPE
CARV	COMBINATION AIR RELEASE VALVE
CB	COUPLING BAND
CCA	CAM COUPLER ASSEMBLY
CEC	CONTROLLER ENCLOSURE CABINET
CHDPE	CORRUGATED HIGH DENSITY POLYETHYLENE
CL	CHAIN LINK
CNC	CONTROL AND NEUTRAL CONDUCTORS
Conc	CONCRETE
CP	COPPER PIPE
CS	COMPOST SOCK
CSP	CORRUGATED STEEL PIPE
CST	CENTER STRIP
CV	CHECK VALVE

D

Dia	DIAMETER
DIP	DUCTILE IRON PIPE
DIT	DRIP IRRIGATION TUBING
DG	DECOMPOSED GRANITE
DN	DIAMETER NOMINAL
DVA	DRIP VALVE ASSEMBLY

E

EC	EROSION CONTROL
ECTC	EROSION CONTROL TECHNOLOGY COUNCIL
Elect	ELECTRIC/ELECTRICAL
Elev	ELEVATION
ELL	ELBOW
ENCL	ENCLOSURE
EP	EDGE OF PAVEMENT
ES	EDGE OF SHOULDER
EST	END STRIP
ESTB	ESTABLISHMENT
ETW	EDGE OF TRAVELED WAY

F

F	FULL CIRCLE
F/P	FULL/PART CIRCLE
FCV	FLOW CONTROL VALVE
FERT	FERTILIZER
FG	FINISHED GRADE
FH	FLEXIBLE HOSE
FIPT	FEMALE IRON PIPE THREAD
FIS	FERTILIZER INJECTOR SYSTEM
FL	FLOW LINE
FR	FIBER ROLL
FS	FLOW SENSOR
FSC	FLOW SENSOR CABLE
FV	FLUSH VALVE

G

Galv	GALVANIZED
GARV	GARDEN VALVE
GARVA	GARDEN VALVE ASSEMBLY
GM	GRAVEL MULCH
GPH	GALLONS PER HOUR
GPM	GALLONS PER MINUTE
GSP	GALVANIZED STEEL PIPE
GV	GATE VALVE

H

H	HALF CIRCLE
HDPE	HIGH DENSITY POLYETHYLENE
HP	HORSEPOWER/HINGE POINT
HPL	HIGH PRESSURE LINE
Hwy	HIGHWAY

I

IC	IRRIGATION CONTROLLER
ICC	IRRIGATION CONTROLLER(S) IN CONTROLLER ENCLOSURE CABINET
ID	INSIDE DIAMETER
IFS	IRRIGATION FILTRATION SYSTEM
IPS	IRON PIPE SIZE
IPT	IRON PIPE THREAD
Irr	IRRIGATION

L

L	LENGTH

M

Max	MAXIMUM
MBGR	METAL BEAM GUARD RAILING
MCV	MANUAL CONTROL VALVE
MIC	MASTER IRRIGATION CONTROLLER
Min	MINIMUM
MIPT	MALE IRON PIPE THREAD
Misc	MISCELLANEOUS
Mtl	MATERIAL
MVP	MAINTENANCE VEHICLE PULLOUT

N

NCN	NO COMMON NAME
NL	NOZZLE LINE
No.	NUMBER
NPT	NATIONAL PIPE THREAD

O

O/C	ON CENTER
OD	OUTSIDE DIAMETER
OL	OVERLAP

P

P	PART CIRCLE
PB	PULL BOX
PCC	PORTLAND CEMENT CONCRETE
PE	POLYETHYLENE
Pkt	PACKET
PL	PLASTIC
PLS	PURE LIVE SEED
PLT	PLANT/PLANTING
PLT ESTB	PLANT ESTABLISHMENT
PM	POST MILE
PR	PRESSURE RATED
PRLV	PRESSURE RELIEF VALVE
PRV	PRESSURE REGULATING VALVE
PVC	POLYVINYL CHLORIDE
Pvmt	PAVEMENT

Q

Q	QUARTER CIRCLE
QCV	QUICK COUPLING VALVE

NOTE:

For additional abbreviations, see Standard Plans A10A and A10B.

R

R	RADIUS
RCP	REINFORCED CONCRETE PIPE
RCV	REMOTE CONTROL VALVE
RCVM	REMOTE CONTROL VALVE (MASTER)
RCVMF	REMOTE CONTROL VALVE (MASTER) W/FLOW SENSOR
RCVP	REMOTE CONTROL VALVE W/PRESSURE REGULATOR
RCW	RECYCLED WATER
RECP	ROLLED EROSION CONTROL PRODUCT
REQ	REQUIRED
RICS	REMOTE IRRIGATION CONTROL SYSTEM
R/W	RIGHT OF WAY

S

S	SLIP
SCH	SCHEDULE
SF	STATE-FURNISHED
Shld	SHOULDER
Sq	SQUARE
SST	SIDE STRIP
Sta	STATION
Std	STANDARD
SW	SIDEWALK/SOUND WALL

T

T	THIRD CIRCLE/THREAD
TLS	TRUCK LOADING STANDPIPE
TQ	THREE QUARTER CIRCLE
TRM	TURF REINFORCEMENT MAT
TT	TWO-THIRDS CIRCLE
TWSA	TREE WELL SPRINKLER ASSEMBLY
Typ	TYPICAL

U

UG	UNDERGROUND

W

W	WIDTH
W/	WITH
WM	WATER METER
WS	WYE STRAINER
WSA	WYE STRAINER ASSEMBLY
WSP	WELDED STEEL PIPE
WWM	WELDED WIRE MESH

STATE OF CALIFORNIA
DEPARTMENT OF TRANSPORTATION

LANDSCAPE AND EROSION CONTROL ABBREVIATIONS

NO SCALE

RSP H1 DATED JULY 19, 2013 SUPERSEDES STANDARD PLAN H1 DATED MAY 20, 2011 - PAGE 218 OF THE STANDARD PLANS BOOK DATED 2010.

REVISED STANDARD PLAN RSP H1

2010 REVISED STANDARD PLAN RSP H1

DATE PLOTTED => 16-AUG-2016
TIME PLOTTED => 10:23

Dist	COUNTY	ROUTE	POST MILES TOTAL PROJECT	SHEET No.	TOTAL SHEETS
01	Men	162	13.9,22.7	40	59

LICENSED LANDSCAPE ARCHITECT

July 15, 2016
PLANS APPROVAL DATE

LICENSED LANDSCAPE ARCHITECT
Michael V. Ferrara 3859
9-30-17
Renewal Date
Date
STATE OF CALIFORNIA

THE STATE OF CALIFORNIA OR ITS OFFICERS OR AGENTS SHALL NOT BE RESPONSIBLE FOR THE ACCURACY OR COMPLETENESS OF SCANNED COPIES OF THIS PLAN SHEET.

TO ACCOMPANY PLANS DATED 06-13-16

EXISTING	NEW	ITEM DESCRIPTION
		WATER METER (WM)
		BACKFLOW PREVENTER ASSEMBLY (BPA)
		BACKFLOW PREVENTER ENCLOSURE (BPE)
		BOOSTER PUMP (BP)
		TRUCK LOADING STANDPIPE (TLS)
	FS	FLOW SENSOR (FS)
X	X	MASTER IRRIGATION CONTROLLER (MIC)
		AUXILIARY IRRIGATION CONTROLLER (AIC)
		IRRIGATION CONTROLLER (IC) IRRIGATION CONTROLLER (IC) (BATTERY) IRRIGATION CONTROLLER (IC) (SOLAR) IRRIGATION CONTROLLER (IC) (TWO WIRE)
		IRRIGATION CONTROLLER(S) IN CONTROLLER ENCLOSURE CABINET (ICC)
acc	ACC	ARMOR-CLAD CONDUCTORS (ACC)
		CONTROL AND NEUTRAL CONDUCTORS (CNC)
		IRRIGATION CONDUIT
		IRRIGATION SLEEVE
dip	DIP	DUCTILE IRON PIPE (SUPPLY LINE) (MAIN) (DIP)
		GALVANIZED STEEL PIPE (SUPPLY LINE) (MAIN) (GSP)
		GALVANIZED STEEL PIPE (SUPPLY LINE) (LATERAL) (GSP)
		PLASTIC PIPE (SUPPLY LINE) (MAIN)
		PLASTIC PIPE (SUPPLY LINE) (LATERAL)
cp	CP	COPPER PIPE (SUPPLY LINE)
dit	DIT	DRIP IRRIGATION TUBING
		REMOTE CONTROL VALVE (RCV) REMOTE CONTROL VALVE (MASTER) (RCVM) REMOTE CONTROL VALVE (MASTER) W/FLOW METER (RCVMF)
P	P	REMOTE CONTROL VALVE W/PRESSURE REGULATOR (RCVP)
		EXISTING MANUAL CONTROL VALVE (MCV)
	V	DRIP VALVE ASSEMBLY (DVA)
	Y	WYE STRAINER ASSEMBLY (WSA)

EXISTING	NEW	ITEM DESCRIPTION
		GATE VALVE (GV)
		BALL VALVE (BV)
		QUICK COUPLING VALVE (QCV)
		CAM COUPLER ASSEMBLY (CCA)
		GARDEN VALVE ASSEMBLY (GARVA)
		PRESSURE REGULATING VALVE (PRV)
		PRESSURE RELIEF VALVE (PRLV)
		FLOW CONTROL VALVE (FCV)
		COMBINATION AIR RELEASE VALVE (CARV)
		CHECK VALVE (CV)
		FLUSH VALVE (FV)
		EXISTING NOZZLE LINE W/TURNING UNION
		EXISTING IRRIGATION SYSTEM
		EXISTING IRRIGATION SYSTEM TO BE REMOVED
		CHAIN LINK GATE
		QUICK COUPLING VALVE W/SPRINKLER PROTECTOR
3	3	SPRINKLER W/SPRINKLER PROTECTOR
	C	CONNECT TO EXISTING SYSTEM
		CAP
		CAP EXISTING
	\\\FR\\\	FIBER ROLL
	\\\CS\\\	COMPOST SOCK

RCV SIZE
IRRIGATION CONTROLLER
CONTROLLER STATION
VALVE IN PARALLEL (IF APPLICABLE)
GPM
QUANTITY OF SPRINKLERS (WHEN SHOWN)

* 2½"-A-2b-40-60

VALVE CODE

* VALVE CODES FOR EXISTING VALVES ARE SHOWN IN A DASHED ENCLOSURE.

STATE OF CALIFORNIA
DEPARTMENT OF TRANSPORTATION

LANDSCAPE AND EROSION CONTROL SYMBOLS

NO SCALE

RSP H2 DATED JULY 15, 2016 SUPERSEDES RSP H2 DATED NOVEMBER 15, 2013 AND RSP H2 DATED JULY 19, 2013 AND STANDARD PLAN H2 DATED MAY 20, 2011 - PAGE 219 OF THE STANDARD PLANS BOOK DATED 2010.

REVISED STANDARD PLAN RSP H2

2010 REVISED STANDARD PLAN RSP H2

DATE PLOTTED => 16-AUG-2016
TIME PLOTTED => 10:23

Dist	COUNTY	ROUTE	POST MILES TOTAL PROJECT	SHEET No.	TOTAL SHEETS
01	Men	162	13.9,22.7	41	59

REGISTERED CIVIL ENGINEER

October 30, 2015
PLANS APPROVAL DATE

REGISTERED PROFESSIONAL ENGINEER Srikanth N. Balasubramanian No. C56426 Exp. 6-30-17 CIVIL STATE OF CALIFORNIA

THE STATE OF CALIFORNIA OR ITS OFFICERS OR AGENTS SHALL NOT BE RESPONSIBLE FOR THE ACCURACY OR COMPLETENESS OF SCANNED COPIES OF THIS PLAN SHEET.

TO ACCOMPANY PLANS DATED 06-13-16

ABBREVIATIONS:

TE TAPERED EDGE

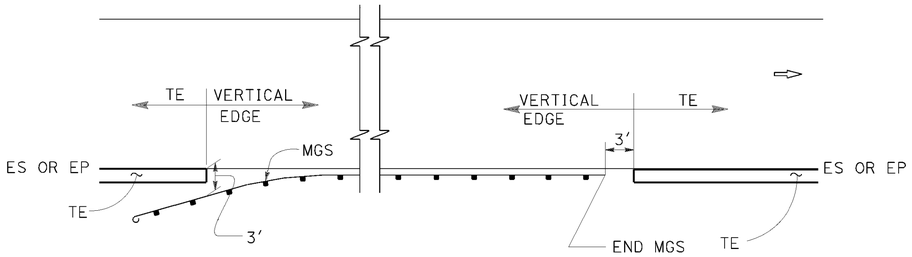

MGS

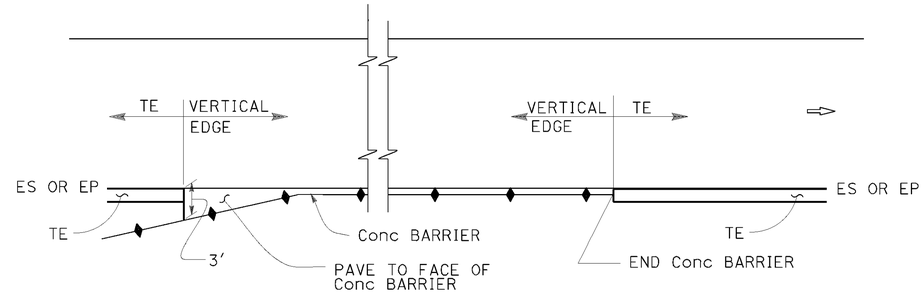

CONCRETE BARRIER

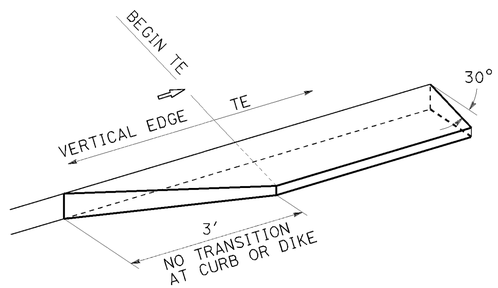

TRANSITION DETAIL FOR CONCRETE ONLY

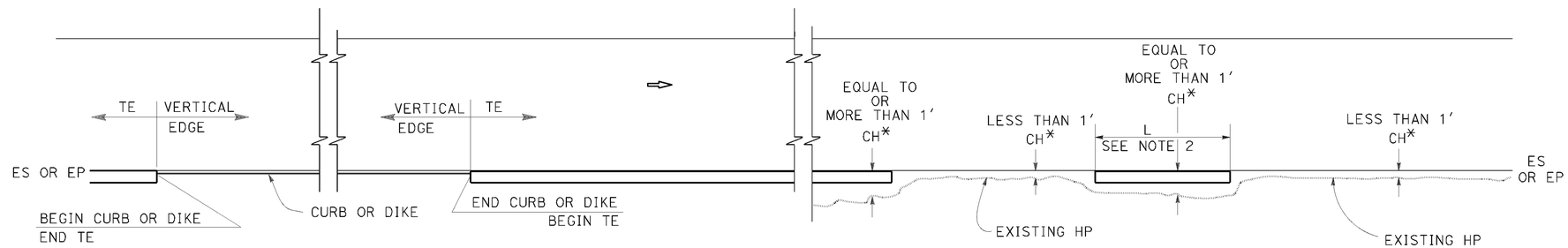

CURB OR DIKE

NARROW SIDE SLOPE

* CH = Distance from ES or EP to existing HP.

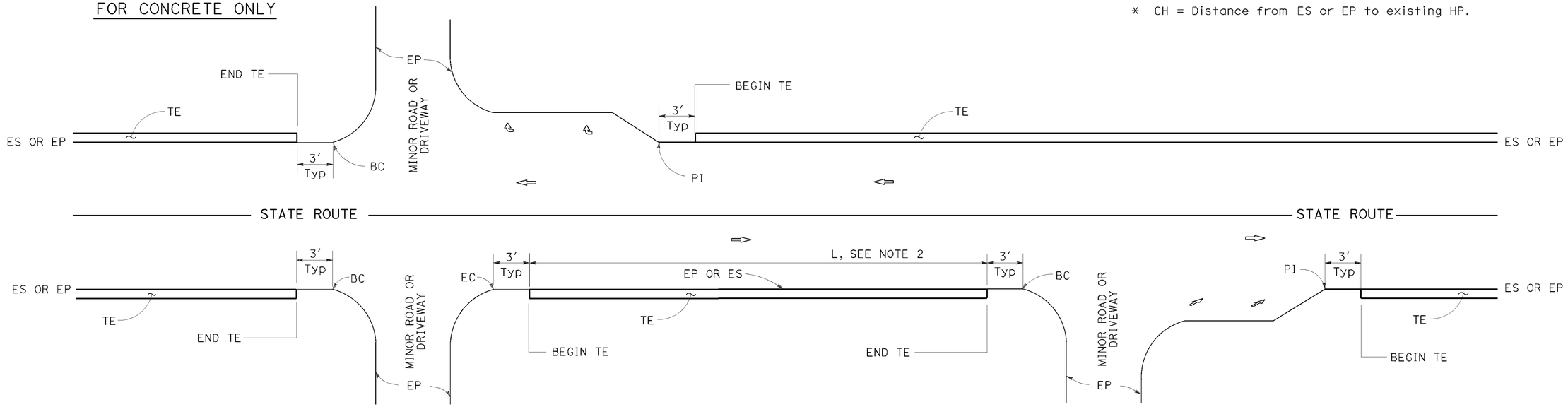

INTERTECTION

MINOR ROADWAY OR DRIVEWAY

DRIVEWAY AND INTERSECTION

STATE OF CALIFORNIA
DEPARTMENT OF TRANSPORTATION

PAVEMENT EDGE TREATMENTS

NO SCALE

NOTES:

1. For details not shown, see Revised Standard Plans RSP P75 and RSP P76.
2. Tapered edge is optional when L is less than 30′.

RSP P74 DATED OCTOBER 30, 2015 SUPERSEDES RSP P74 DATED NOVEMBER 15, 2013 AND RSP P74 DATED JANUARY 20, 2012 THAT SUPPLEMENTS THE STANDARD PLANS BOOK DATED 2010.

REVISED STANDARD PLAN RSP P74

2010 REVISED STANDARD PLAN RSP P74

DATE PLOTTED => 16-AUG-2016
TIME PLOTTED => 10:23

Dist	COUNTY	ROUTE	POST MILES TOTAL PROJECT	SHEET No.	TOTAL SHEETS
01	Men	162	13.9,22.7	42	59

REGISTERED CIVIL ENGINEER

October 30, 2015
PLANS APPROVAL DATE

REGISTERED PROFESSIONAL ENGINEER Srikanth N. Balasubramanian No. C56426 Exp. 6-30-17 CIVIL STATE OF CALIFORNIA

THE STATE OF CALIFORNIA OR ITS OFFICERS OR AGENTS SHALL NOT BE RESPONSIBLE FOR THE ACCURACY OR COMPLETENESS OF SCANNED COPIES OF THIS PLAN SHEET.

TO ACCOMPANY PLANS DATED 06-13-16

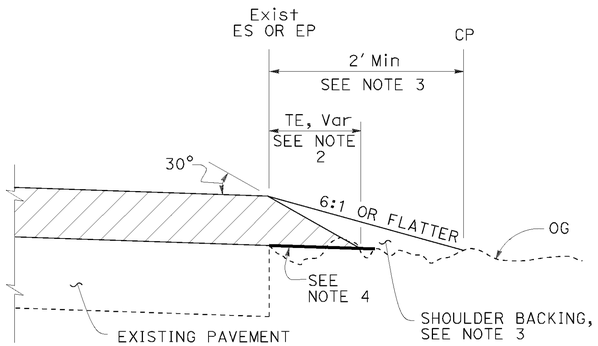

CASE A
Tapered Edge

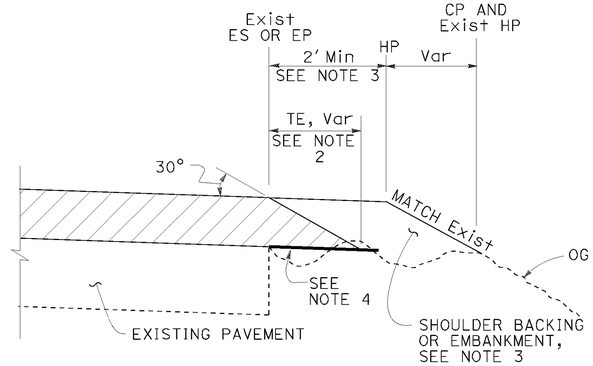

CASE B
Tapered Edge

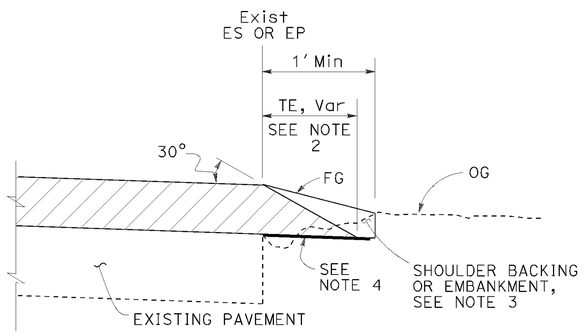

CASE C
Tapered Edge

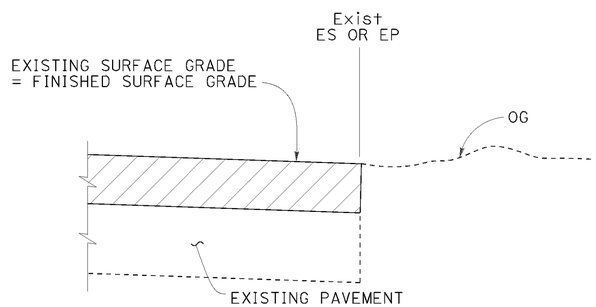

CASE D
Vertical Edge

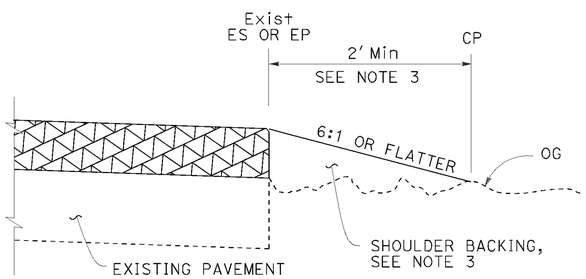

CASE E
Vertical Edge

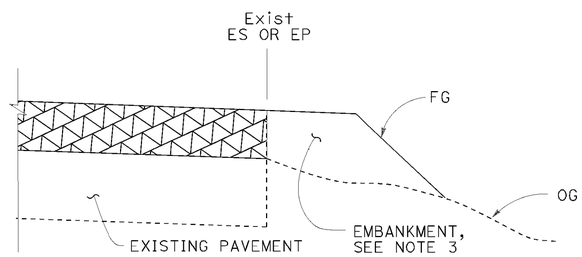

CASE F
Vertical Edge
* See Table A and Revised Std Plan RSP P74

LEGEND:

- HMA OVERLAY
- HMA OR CONCRETE OVERLAY
- CONCRETE OVERLAY

ABBREVIATIONS:

TE TAPERED EDGE
TT TOTAL THICKNESS OF TE

TABLE A
EDGE TREATMENT FOR VARIOUS OVERLAY THICKNESS AND CONDITIONS

	OVERLAY THICKNESS	
FIELD CONDITION	LESS THAN 0.15'	0.15' OR MORE
Exist SLOPE 6:1 OR FLATTER	CASE E	CASE A
Exist SLOPE 3:1 TO 6:1	CASE E	CASE B
Exist SLOPE STEEPER THAN 3:1	CASE F	CASE F
CUT SECTION (REPLACE, COLD PLANE, MILL PAVEMENT)	CASE D	CASE C

ADDITIONAL HMA OR CONCRETE QUANTITIES FOR TE/SIDE/MILE

TYPICAL CROSS SECTION	TT	TOTAL ADDITIONAL MATERIAL FOR TE/SIDE/MILE		
		HMA (TON)	CONCRETE (CY)*	CONCRETE (CY)**
TT	0.15'	7.7	NA	NA
	0.20'	13.7	NA	NA
	0.30'	30.9	NA	NA
	0.40'	54.9	NA	NA
	0.45'	69.4	NA	NA
TT 0.43'	0.50'	84.2	NA	NA
	0.60'	113.9	NA	NA
	0.70'	143.6	70.9	94.2
	0.80'	173.3	85.6	112.2
	0.90'	203.0	100.3	130.2
	1.00'	232.7	114.9	148.2
	1.10'	262.4	129.6	166.2
	1.20'	292.1	144.3	184.2

* For Detail "A"
** For Optional Detail "A"

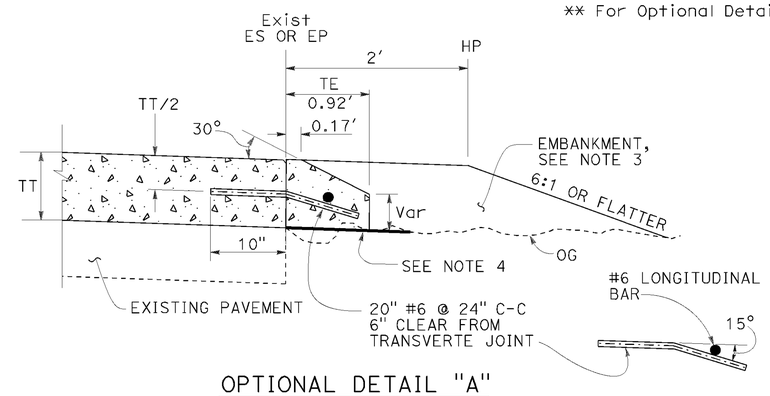

OPTIONAL DETAIL "A"
For concrete overlay
See Note 5

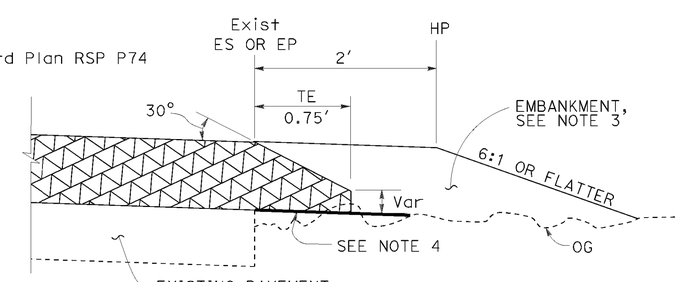

DETAIL "A"
For HMA overlay thickness more than 0.43' or concrete overlay

NOTES:

1. For limits of tapered edge and vertical edge treatments, see Revised Standard Plan RSP P74.
2. Details shown for HMA overlay thickness less than 0.43'. See Detail "A" for HMA overlay thickness more than 0.43' or concrete overlay.
3. For locations and limits of shoulder backing or embankment see project plans.
4. Grade existing ground to place tapered edge. 1' minimum width
5. Tapered edge transverse joint must match overlay transverse joint. End of #6 longitudinal bar must be 2" ±½" clear from transverse joint.
6. Tapered edge is not needed in the area of MGS, barrier, right turn lane and acceleration lane. See Revised Standard Plan RSP P74.

STATE OF CALIFORNIA
DEPARTMENT OF TRANSPORTATION

PAVEMENT EDGE TREATMENTS-OVERLAYS

NO SCALE

RSP P75 DATED OCTOBER 30, 2015 SUPERSEDES RSP P75 DATED NOVEMBER 15, 2013 AND RSP P75 DATED JANUARY 20, 2012 THAT SUPPLEMENTS THE STANDARD PLANS BOOK DATED 2010.

REVISED STANDARD PLAN RSP P75

2010 REVISED STANDARD PLAN RSP P75

DATE PLOTTED => 16-AUG-2016
TIME PLOTTED => 10:23

Dist	COUNTY	ROUTE	POST MILES TOTAL PROJECT	SHEET No.	TOTAL SHEETS
01	Men	162	13.9,22.7	43	59

REGISTERED CIVIL ENGINEER

October 30, 2015
PLANS APPROVAL DATE

REGISTERED PROFESSIONAL ENGINEER
Srikanth N. Balasubramanian
No. C56426
Exp. 6-30-17
CIVIL
STATE OF CALIFORNIA

THE STATE OF CALIFORNIA OR ITS OFFICERS OR AGENTS SHALL NOT BE RESPONSIBLE FOR THE ACCURACY OR COMPLETENESS OF SCANNED COPIES OF THIS PLAN SHEET.

TO ACCOMPANY PLANS DATED 06-13-16

LEGEND:

- HMA PAVEMENT
- HMA OR CONCRETE PAVEMENT
- CONCRETE PAVEMENT

ABBREVIATIONS:

TE TAPERED EDGE
TT TOTAL THICKNESS OF TE
HW HINGE WIDTH, DISTANCE FROM ES OR EP TO HP

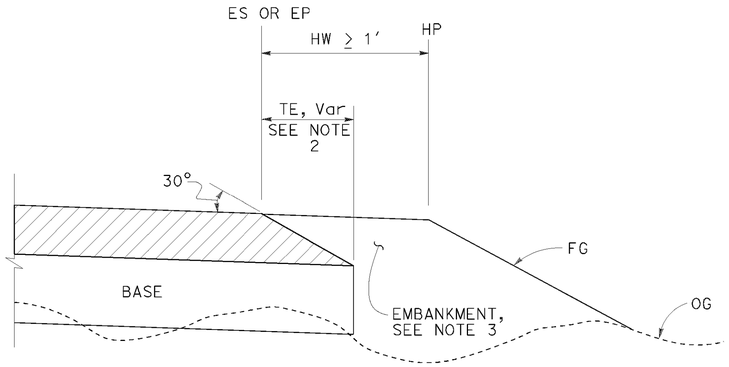

CASE K
Tapered Edge - Fill Section, HW ≥ 1′

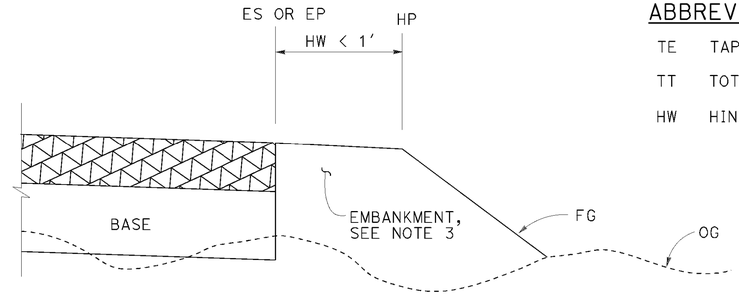

CASE L
Vertical Edge - Fill Section, HW < 1′

FILL SECTION

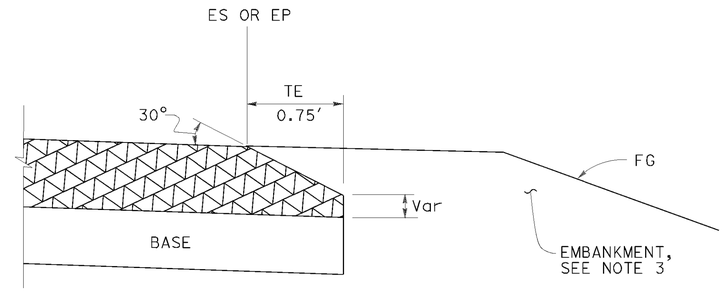

DETAIL "B"
For HMA pavement thickness more than 0.43′ or concrete pavement

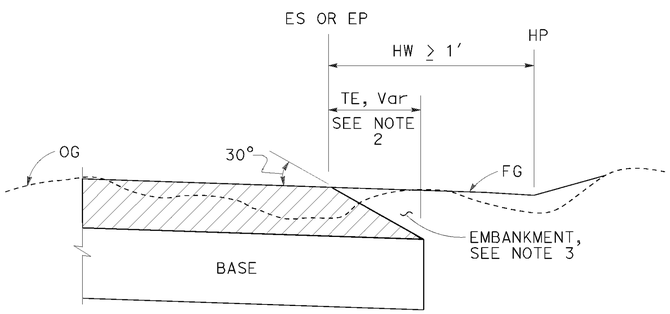

CASE M
Tapered Edge - Cut Section, HW ≥ 1′

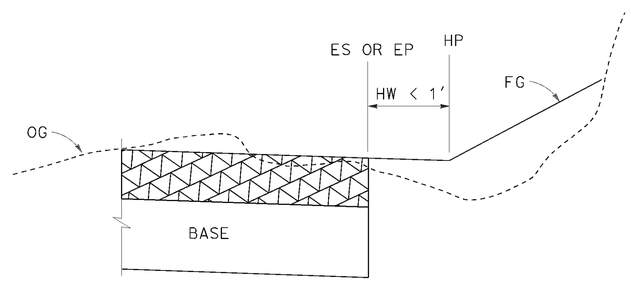

CASE N
Vertical Edge - Cut Section, HW < 1′

CUT SECTION

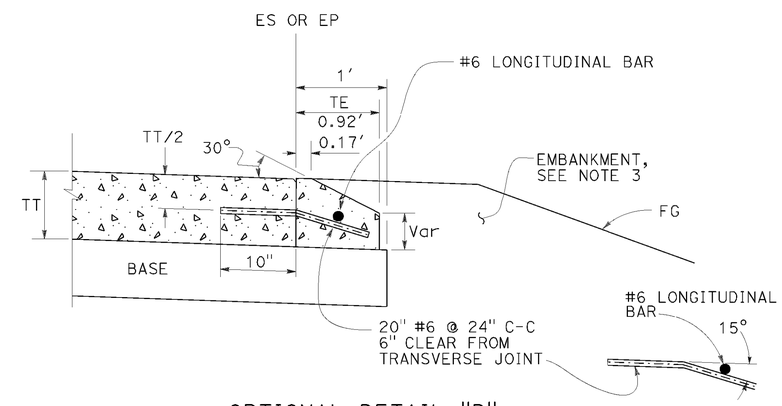

OPTIONAL DETAIL "B"
For concrete pavement
See Note 4

NOTES:

1. For limits of tapered edge and vertical edge treatments, see Revised Standard Plan RSP P74
2. Details shown for HMA pavement thickness less than 0.43′. See Detail "B" for HMA pavement thickness more than 0.43′ or concrete pavement.
3. For locations and limits of embankment see project plans.
4. Tapered edge transverse joint must match pavement transverse joint. End of #6 longitudinal bar must be 2" ±½" clear from transverse joint.
5. Tapered edge is not needed in the area of MGS, barrier, right turn lane and acceleration lane. See Revised Standard Plan RSP P74.

STATE OF CALIFORNIA
DEPARTMENT OF TRANSPORTATION

PAVEMENT EDGE TREATMENTS-NEW CONSTRUCTION

NO SCALE

RSP P76 DATED OCTOBER 30, 2015 SUPERSEDES RSP P76 DATED NOVEMBER 15, 2013 AND RSP P76 DATED JANUARY 20, 2012 THAT SUPPLEMENTS THE STANDARD PLANS BOOK DATED 2010.

REVISED STANDARD PLAN RSP P76

2010 REVISED STANDARD PLAN RSP P76

DATE PLOTTED => 16-AUG-2016
TIME PLOTTED => 10:23

Dist	COUNTY	ROUTE	POST MILES TOTAL PROJECT	SHEET No.	TOTAL SHEETS
01	Men	162	13.9,22.7	44	59

REGISTERED CIVIL ENGINEER

July 19, 2013
PLANS APPROVAL DATE

REGISTERED PROFESSIONAL ENGINEER Gurinderpal Bhullar No. C48815 Exp. 9-30-14 CIVIL STATE OF CALIFORNIA

THE STATE OF CALIFORNIA OR ITS OFFICERS OR AGENTS SHALL NOT BE RESPONSIBLE FOR THE ACCURACY OR COMPLETENESS OF SCANNED COPIES OF THIS PLAN SHEET.

TO ACCOMPANY PLANS DATED 06-13-16

2010 REVISED STANDARD PLAN RSP T9

TABLE 1

TAPER LENGTH CRITERIA AND CHANNELIZING DEVICE SPACING

SPEED (S)	MINIMUM TAPER LENGTH * FOR WIDTH OF OFFSET 12 FEET (W)				MAXIMUM CHANNELIZING DEVICE SPACING		
					X	Y	Z **
	TANGENT 2L	MERGING L	SHIFTING L/2	SHOULDER L/3	TAPER	TANGENT	CONFLICT
mph	ft	ft	ft	ft	ft	ft	ft
20	160	80	40	27	20	40	10
25	250	125	63	42	25	50	12
30	360	180	90	60	30	60	15
35	490	245	123	82	35	70	17
40	640	320	160	107	40	80	20
45	1080	540	270	180	45	90	22
50	1200	600	300	200	50	100	25
55	1320	660	330	220	55	110	27
60	1440	720	360	240	60	120	30
65	1560	780	390	260	65	130	32
70	1680	840	420	280	70	140	35

* - For other offsets, use the following merging taper length formula for L:
For speed of 40 mph or less, $L = WS^2/60$
For speed of 45 mph or more, $L = WS$

Where: L = Taper length in feet
W = Width of offset in feet
S = Posted speed limit, off-peak 85th-percentile speed prior to work starting, or the anticipated operating speed in mph

** - Use for taper and tangent sections where there are no pavement markings or where there is a conflict between existing pavement markings and channelizers (CA).

TABLE 2

LONGITUDINAL BUFFER SPACE AND FLAGGER STATION SPACING

SPEED *	Min D **	DOWNGRADE Min D ***		
		-3%	-6%	-9%
mph	ft	ft	ft	ft
20	115	116	120	126
25	155	158	165	173
30	200	205	215	227
35	250	257	271	287
40	305	315	333	354
45	360	378	400	427
50	425	446	474	507
55	495	520	553	593
60	570	598	638	686
65	645	682	728	785
70	730	771	825	891

* - Speed is posted speed limit, off-peak 85th-percentile speed prior to work starting, or the anticipated operating speed in mph

** - Longitudinal buffer space or flagger station spacing

*** - Use on sustained downgrade steeper than -3 percent and longer than 1 mile.

TABLE 3

ADVANCE WARNING SIGN SPACING

ROAD TYPE	DISTANCE BETWEEN SIGNS *		
	A	B	C
	ft	ft	ft
URBAN - 25 mph OR LESS	100	100	100
URBAN - MORE THAN 25 mph TO 40 mph	250	250	250
URBAN - MORE THAN 40 mph	350	350	350
RURAL	500	500	500
EXPRESSWAY / FREEWAY	1000	1500	2640

* - The distances are approximate, are intended for guidance purposes only, and should be applied with engineering judgment. These distances should be adjusted by the Engineer for field conditions, if necessary, by increasing or decreasing the recommmended distances.

STATE OF CALIFORNIA
DEPARTMENT OF TRANSPORTATION

TRAFFIC CONTROL SYSTEM TABLES FOR LANE AND RAMP CLOSURES

NO SCALE

RSP T9 DATED JULY 19, 2013 SUPERSEDES RSP T9 DATED APRIL 19, 2013 THAT SUPPLEMENTS THE STANDARD PLANS BOOK DATED 2010.

REVISED STANDARD PLAN RSP T9

DATE PLOTTED => 16-AUG-2016
TIME PLOTTED => 10:23

Dist	COUNTY	ROUTE	POST MILES TOTAL PROJECT	SHEET No.	TOTAL SHEETS
01	Men	162	13.9,22.7	45	59

REGISTERED CIVIL ENGINEER

April 19, 2013
PLANS APPROVAL DATE

REGISTERED PROFESSIONAL ENGINEER Gurinderpal Bhullar No. C48815 Exp. 9-30-14 CIVIL STATE OF CALIFORNIA

THE STATE OF CALIFORNIA OR ITS OFFICERS OR AGENTS SHALL NOT BE RESPONSIBLE FOR THE ACCURACY OR COMPLETENESS OF SCANNED COPIES OF THIS PLAN SHEET.

TO ACCOMPANY PLANS DATED 06-13-16

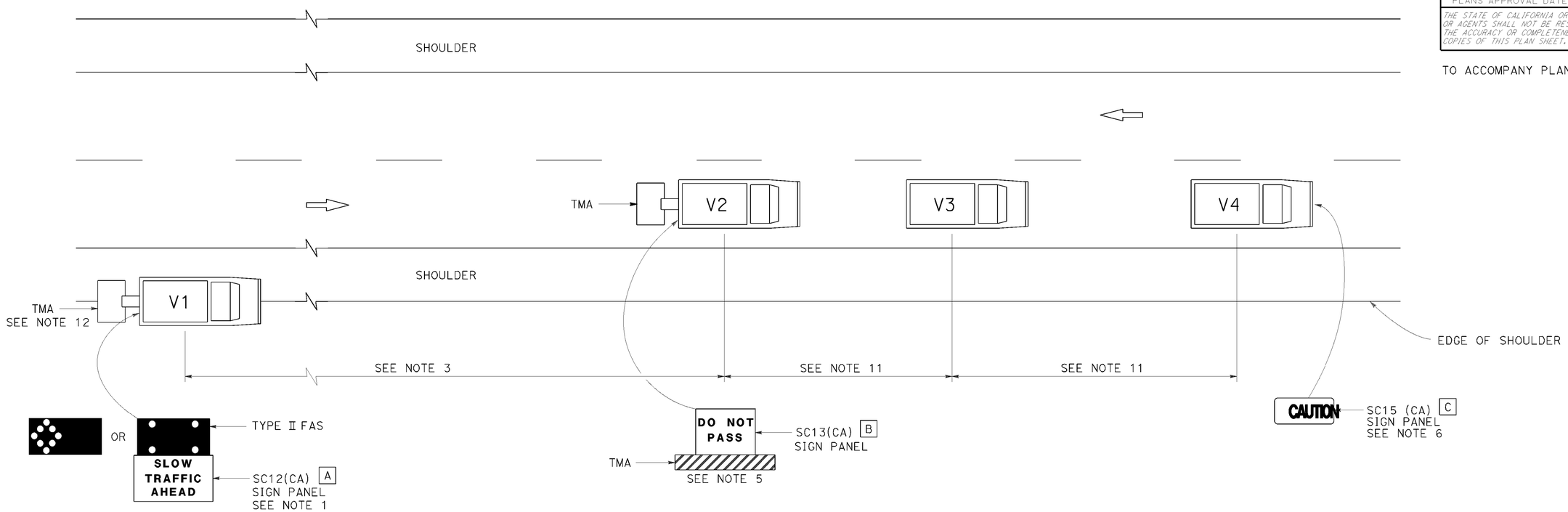

LEGEND

V1	SIGN VEHICLE
V2	SHADOW VEHICLE
V3	WORK/APPLICATION VEHICLE
V4	SIGN VEHICLE
TMA	TRUCK-MOUNTED ATTENUATOR
	FLASHING ARROW SIGN (FAS) IN FLASHING CAUTION MODE
	FLASHING ARROW SIGN (FAS) IN ALTERNATING DIAMOND CAUTION

SIGN PANEL SIZE (Min)

A	72" x 42"
B	54" x 42"
C	54" x 24"

NOTES:

1. Either a changeable message sign or a SC12(CA) "SLOW TRAFFIC AHEAD" sign shall be mounted on the rear of sign vehicle V1. The changeable message sign shall be sequenced to show the "CAUTION" message first, follow by the "SLOW TRAFFIC AHEAD" message. A Type II flashing arrow sign may be used with the SC12(CA) sign panel.
2. Sign vehicle V1 should be positioned where highly visible when shoulders are not available.
3. If traffic queues develop, sign vehicle V1 should be positioned upstream from the end of queue.
4. Vehicle-mounted sign panels shall have Type III or above retroreflective sheeting, black on white, or black on fluorescent orange, with 6" minimum series D letters per Caltrans sign specifications.
5. Shadow vehicle shall be equipped with a truck-mounted attenuator. The sign panel shown shall be mounted on the rear of shadow vehicle V2. The message "LANE CLOSED" may be used in place of the "DO NOT PASS" message.
6. The sign panel shown shall be mounted on the front of sign vehicle V4, facing opposing traffic.
7. All vehicles shall be equipped with flashing or rotating amber lights.
8. Sign vehicle V4 will not be required when the work and vehicles V2 and V3 are 2' or more from the centerline of the highway during the work or application operations.
9. All vehicles used for lane closures shall be equipped with two-way radios and the vehicle operators shall maintain communication during the work or application operation.
10. This plan shall not be used where workers would be on foot in the work area. Use a stationary type lane closure (Revised Standard Plan T13) for this condition.
11. Minimize spacing between vehicles V2 and V3 and vehicles V3 and V4 to deter road users from driving in between them.
12. If sign vehicle V1 encroaches into the traffic lane due to insufficient shoulder width, sign vehicle V1 shall be equipped with a truck-mounted attenuator. Sign vehicle V1 shall stay as close to the edge of shoulder as practicable.

STATE OF CALIFORNIA
DEPARTMENT OF TRANSPORTATION

TRAFFIC CONTROL SYSTEM FOR MOVING LANE CLOSURE ON TWO LANE HIGHWAYS

NO SCALE

RSP T17 DATED APRIL 19, 2013 SUPERSEDES STANDARD PLAN T17
DATED MAY 20, 2011 - PAGE 245 OF THE STANDARD PLANS BOOK DATED 2010.

REVISED STANDARD PLAN RSP T17

2010 REVISED STANDARD PLAN RSP T17

DATE PLOTTED => 16-AUG-2016
TIME PLOTTED => 10:24

Dist	COUNTY	ROUTE	POST MILES TOTAL PROJECT	SHEET No.	TOTAL SHEETS
01	Men	162	13.9,22.7	46	59

REGISTERED CIVIL ENGINEER

July 15, 2016
PLANS APPROVAL DATE

REGISTERED PROFESSIONAL ENGINEER — Carl M. Duan, No. C59976, Exp. 6-30-18, CIVIL, STATE OF CALIFORNIA

THE STATE OF CALIFORNIA OR ITS OFFICERS OR AGENTS SHALL NOT BE RESPONSIBLE FOR THE ACCURACY OR COMPLETENESS OF SCANNED COPIES OF THIS PLAN SHEET.

TO ACCOMPANY PLANS DATED 06-13-16

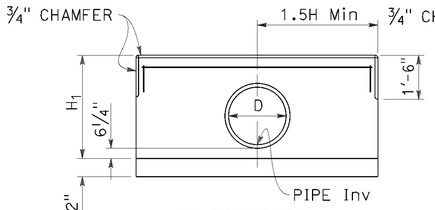

ELEVATION
STRAIGHT HEADWALL
SINGLE CIRCULAR PIPE

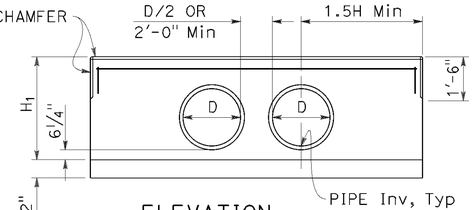

ELEVATION
STRAIGHT HEADWALL
DOUBLE CIRCULAR PIPE

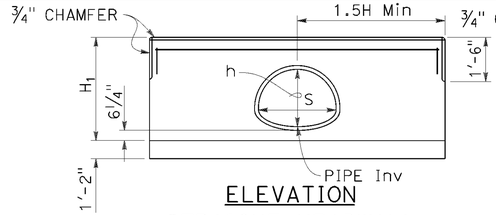

ELEVATION
STRAIGHT HEADWALL
SINGLE CMP

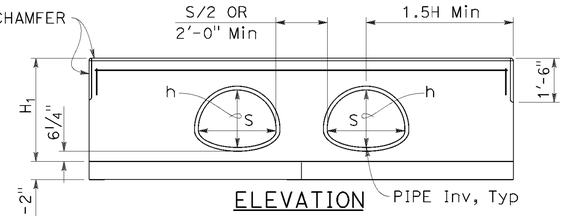

ELEVATION
STRAIGHT HEADWALL
DOUBLE CMP

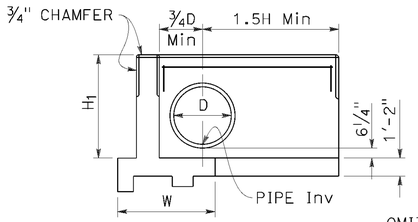

ELEVATION
"L" HEADWALL

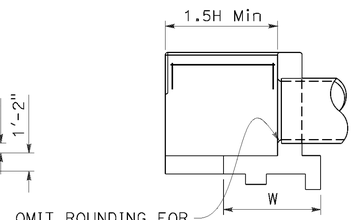

SECTION
"L" HEADWALL

CIRCULAR PIPE CULVERT HEADWALLS

See Note 2

H	CIRCULAR PIPE SIZE D	CMP ARCH SIZE S x h
2'-8"	12"	-
2'-11"	15"	21" x 15"
3'-2"	18"	24" x 18"
3'-5"	21"	28" x 20"
3'-8"	24"	35" x 24"
3'-11"	27"	-
4'-2"	30"	42" x 29"
4'-5"	33"	49" x 33"
4'-8"	36"	-
4'-11"	39"	57" x 38"
5'-2"	42"	64" x 43"
5'-5"	45"	-
5'-8"	48"	71" x 47"
5'-11"	51"	-
6'-2"	54"	-

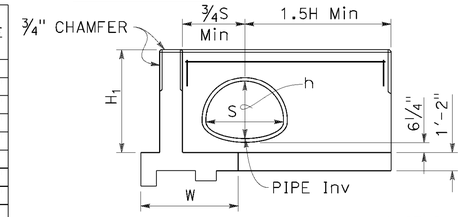

ELEVATION
"L" HEADWALL

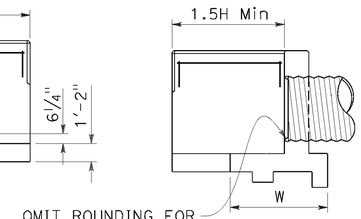

SECTION
"L" HEADWALL

CMP ARCH CULVERT HEADWALLS

See Note 2

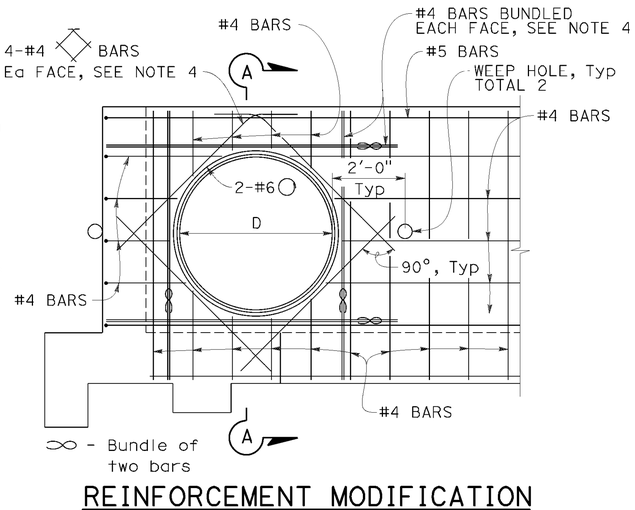

REINFORCEMENT MODIFICATION

"L" headwall shown. Straight headwall similar.
Circular pipe shown. CMP arch similar.

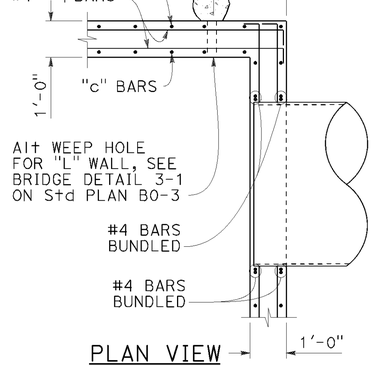

PLAN VIEW
STEM WALL

"L" headwall shown.
Straight headwall similar.

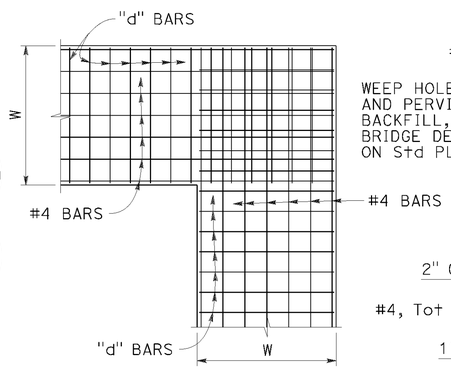

PLAN VIEW
FOOTING

"L" headwall shown.
Straight headwall similar.

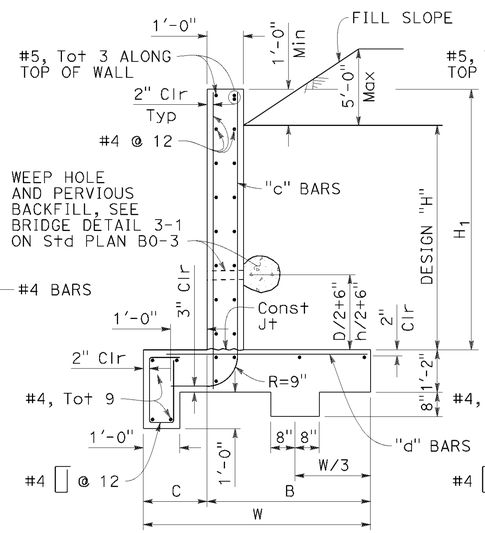

TYPICAL SECTION

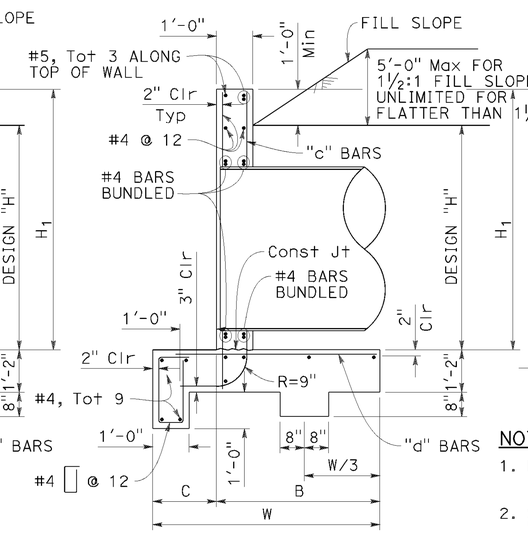

SECTION A-A

DETAIL OF DESIGN LOADING CASES

NOTES:

1. Length of wall from ℄ pipe to end of wall is 1.5H Min, unless a greater length is shown on project plans.
2. Single circular pipe or single CMP shown for "L" headwall. For double pipe in "L" headwall, see "ELEVATION STRAIGHT HEADWALL DOUBLE CIRCULAR PIPE" or "ELEVATION STRAIGHT HEADWALL DOUBLE CMP" detail for additional information.
3. Cable railing to be installed on top of headwall when shown on Project Plans. See Revised Standard Plan RSP B11-47 for cable railing details.
4. Adjacent to each side of the opening, place additional reinforcement equivalent to half the interupted main reinforcement. For pipes 42" diameter and greater, add 4 diagonals, 1 bar each side. Extend bars one development length past the intersection with the adjacent diagonal bar, or where bars intersect mid thickness of adjacent wall, bottom slab or at top of wall, bend ends as required into same plane.
5. Quantities are approximate and for design purposes only. No deduction is made for pipe or arch occupancy.

H		2'-8"	2'-11"	3'-2"	3'-5"	3'-8"	3'-11"	4'-2"	4'-5"	4'-8"	4'-11"	5'-2"	5'-5"	5'-8"	5'-11"	6'-2"
W		4'-7"	4'-9"	4'-10"	5'-0"	5'-1"	5'-2"	5'-3"	5'-5"	5'-6"	5'-7"	5'-8"	5'-9"	5'-11"	6'-0"	6'-3"
C		1'-2"	1'-2"	1'-2"	1'-3"	1'-3"	1'-3"	1'-3"	1'-4"	1'-4"	1'-4"	1'-5"	1'-5"	1'-6"	1'-6"	1'-9"
B		3'-5"	3'-7"	3'-8"	3'-9"	3'-10"	3'-11"	4'-0"	4'-1"	4'-2"	4'-3"	4'-3"	4'-4"	4'-5"	4'-6"	4'-6"
"c" BARS		#4 @ 12	#4 @ 12	#4 @ 12	#4 @ 12	#4 @ 12	#4 @ 12	#4 @ 12	#4 @ 12	#4 @ 12	#4 @ 12	#4 @ 12	#4 @ 12	#4 @ 12	#4 @ 12	#5 @ 12
"d" BARS		#4 @ 12	#4 @ 8	#4 @ 8	#4 @ 8	#4 @ 8	#5 @ 12	#5 @ 12	#5 @ 12	#5 @ 12	#5 @ 8	#5 @ 8	#5 @ 8	#5 @ 8	#6 @ 8	#6 @ 8
* Conc CY/LF		0.404	0.412	0.415	0.423	0.426	0.430	0.433	0.440	0.444	0.448	0.451	0.455	0.462	0.466	0.477
* Reinf LB/LF		23	24	24	25	25	26	27	27	28	28	29	29	30	31	32
**CASE I	Ser (q'o, B')	0.79, 4.66	0.83, 4.57	0.88, 4.58	0.89, 4.73	0.93, 4.74	0.93, 4.75	1.02, 4.75	1.02, 4.92	1.07, 4.93	1.11, 4.94	1.12, 4.98	1.16, 4.99	1.17, 5.16	1.21, 5.18	1.15, 5.53
	Str (q'o, B')	1.48, 1.75	1.53, 1.80	1.65, 1.76	1.64, 1.88	1.76, 1.85	1.89, 1.83	2.02, 1.80	1.97, 1.95	2.08, 1.94	2.20, 1.93	2.28, 1.92	2.39, 1.92	2.31, 2.08	2.41, 2.09	2.17, 2.41
	Extr (q'o, B')	0.65, 4.16	0.68, 4.27	0.72, 4.29	0.74, 4.44	0.78, 4.46	0.82, 4.47	0.86, 4.47	0.87, 4.63	0.92, 4.63	0.96, 4.64	0.98, 4.69	1.03, 4.69	1.04, 4.84	1.09, 4.84	1.05, 5.18
**CASE II	Ser (q'o, B')	0.41, 4.52	0.44, 4.67	0.48, 4.73	0.51, 4.90	0.55, 4.95	0.59, 5.00	0.63, 5.04	0.65, 5.21	0.70, 5.26	0.74, 5.30	0.77, 5.37	0.81, 5.40	0.83, 5.58	0.88, 5.61	0.86, 5.96
	Str (q'o, B')	1.05, 4.49	1.10, 4.64	1.15, 4.69	1.19, 4.86	1.24, 4.90	1.30, 4.94	1.36, 4.98	1.39, 5.15	1.46, 5.18	1.52, 5.22	1.56, 5.28	1.62, 5.31	1.62, 5.48	1.72, 5.51	1.69, 5.85
	Extr (q'o, B')	0.98, 3.90	1.03, 4.00	1.10, 4.01	1.13, 4.15	1.19, 4.15	1.26, 4.15	1.33, 4.14	1.37, 4.28	1.44, 4.27	1.52, 4.26	1.57, 4.29	1.65, 4.28	1.68, 4.41	1.77, 4.40	1.72, 4.71
**CASE III	Ser (q'o, B')	0.61, 4.53	0.64, 4.73	0.68, 4.76	0.70, 4.91	0.74, 4.91	0.79, 4.94	0.83, 4.93	0.85, 5.08	1.17, 4.03	1.23, 4.03	1.27, 4.06	1.34, 4.02	1.36, 4.15	1.43, 4.11	1.36, 4.45
	Str (q'o, B')	0.99, 4.28	1.04, 4.67	1.10, 4.69	1.13, 4.83	1.19, 4.82	1.25, 4.83	1.32, 4.82	1.35, 4.95	2.02, 2.66	2.16, 2.62	2.25, 2.59	2.44, 2.48	2.49, 2.54	2.70, 2.44	2.50, 2.72
	Extr (q'o, B')	0.90, 3.88	0.95, 3.93	1.01, 3.91	1.04, 4.02	1.11, 3.97	1.18, 3.92	1.25, 3.90	1.28, 4.00	1.35, 3.94	1.43, 3.92	1.11, 5.14	1.55, 3.87	1.58, 3.97	1.67, 3.91	1.60, 4.22

* Quantities include 1'-0" extension above the design "H" limit.
** q'o = net bearing stress (ksf), B' = effective footing width (ft)
Ser - service limit
Str - strength limit
Extr - extreme event

REINFORCED CONCRETE HEADWALL

Quantities do not include added diagonals and do not consider pipe occupancy.

NOTE: Reinforced Concrete: fy = 60,000 psi
f'c = 3,600 psi

Earth Density: 120 pcf
Equivalent Fluid Pressure: 36 pcf

STATE OF CALIFORNIA
DEPARTMENT OF TRANSPORTATION

PIPE CULVERT HEADWALLS STRAIGHT AND "L"

NO SCALE

RSP D89 DATED JULY 15, 2016 SUPERSEDES STANDARD PLAN D89
DATED MAY 20, 2011 - PAGE 188 OF THE STANDARD PLANS BOOK DATED 2010.

REVISED STANDARD PLAN RSP D89

2010 REVISED STANDARD PLAN RSP D89

DATE PLOTTED => 16-AUG-2016
TIME PLOTTED => 10:24

DIST	COUNTY	ROUTE	POST MILES TOTAL PROJECT	SHEET No.	TOTAL SHEETS
01	MEN	162	13.9,22.7	47	59

REGISTERED CIVIL ENGINEER 5/27/16 DATE

June 13, 2016
PLANS APPROVAL DATE

REGISTERED PROFESSIONAL ENGINEER SHANDAN WENDY HOU No. 71037 Exp. 6-30-17 CIVIL STATE OF CALIFORNIA

The State of California or its officers or agents shall not be responsible for the accuracy or completeness of scanned copies of this plan sheet.

NOTES:

(A) Concrete Barrier Slab

(B) Concrete Barrier, Type 80 (MOD)

(C) Tubular Bicycle Railing, see "TUBLAR BICYCLE RAILING" sheet

(D) Temporary Railing, Type K, See "ROADWAY PLANS"

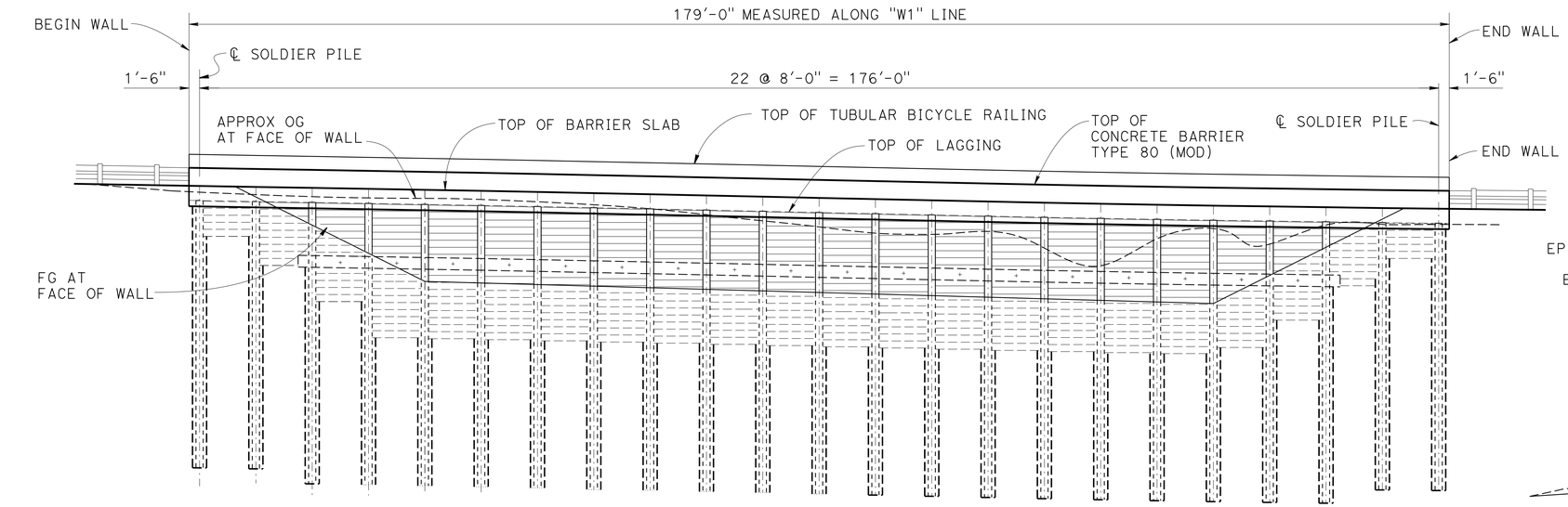

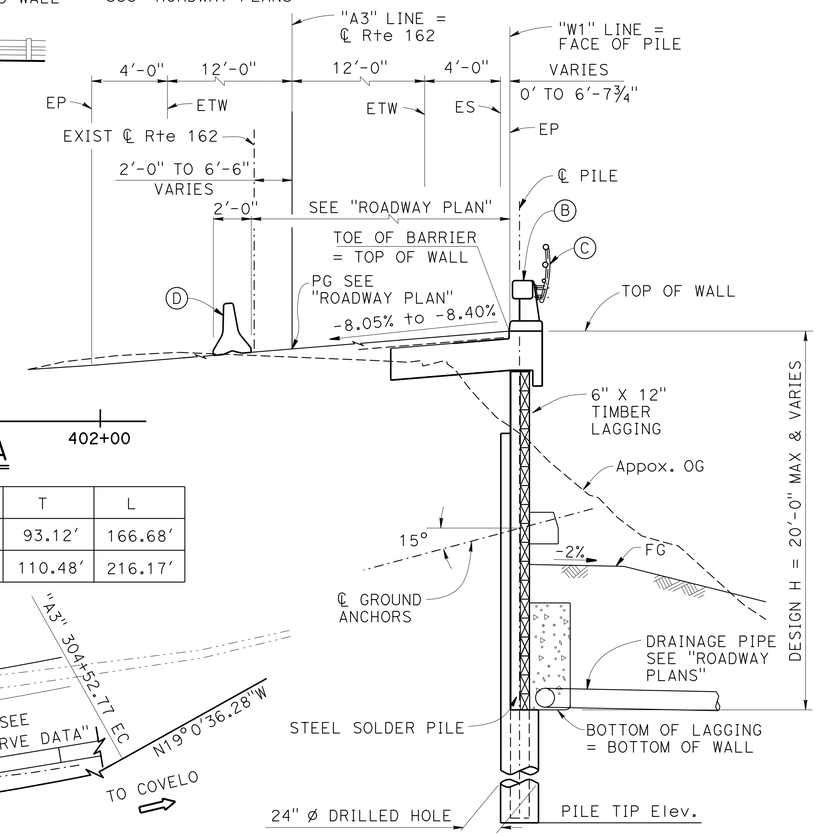

TYPICAL SECTION

¼"=1'-0"

DATUM ELEV 1985.00

400+00 401+00 402+00

DEVELOPED ELEVATION

1"=10'

CURVE DATA

No.	R	Δ	T	L
1	150'	63°39'58"	93.12'	166.68'
2	425'	29°08'35"	110.48'	216.17'

PS&E

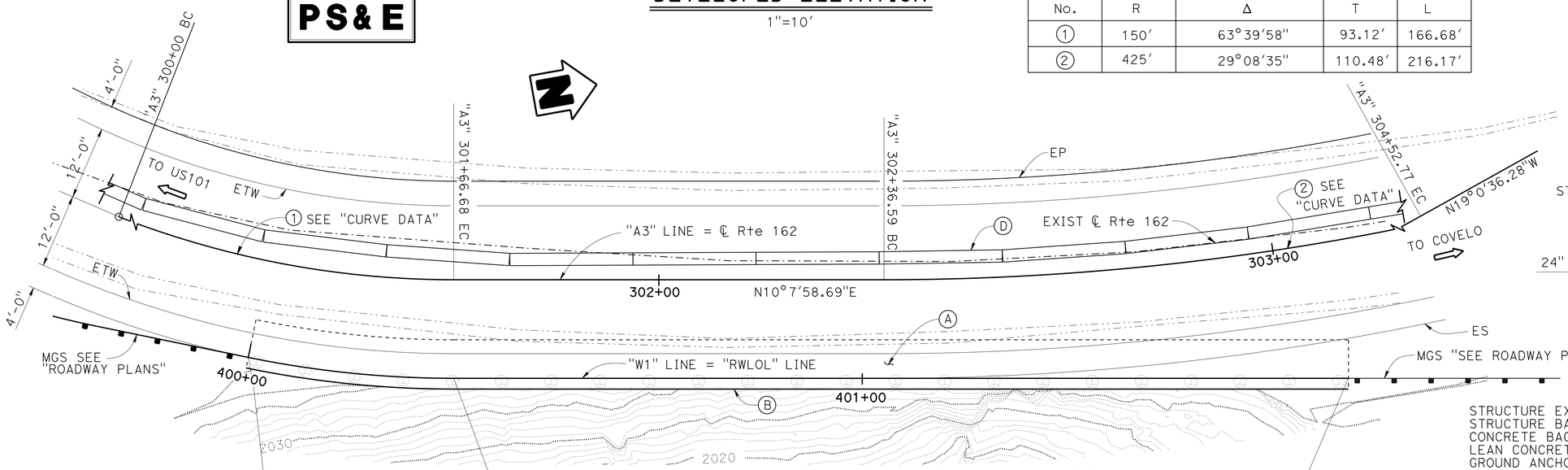

BEGIN WALL
Sta 400+00 BC "W1" LINE = 16'-0" Rt
Sta 301+36.30 "A3" LINE

Sta 400+33.62 EC "W1" LINE= 16'-0" Rt
Sta 301+66.68 EC "A3" LINE

END WALL
Sta 401+79.00 "W1" LINE = 22'-6" Rt Sta 303+08.62 "A3" LINE

PLAN

1"=10'

NOTE:
THE CONTRACTOR MUST VERIFY ALL CONTROLLING FIELD DIMENSIONS BEFORE ORDERING OR FABRICATING ANY MATERIAL.

QUANTITIES

STRUCTURE EXCAVATION (SOLDIER PILE WALL)	431	CY
STRUCTURE BACKFILL (SOLDIER PILE WALL)	223	CY
CONCRETE BACKFILL (SOLDIER PILE WALL)	55	CY
LEAN CONCRETE BACKFILL	42	CY
GROUND ANCHOR (SUBHORIZONTAL)	18	EA
STEEL SOLDIER PILE (HP 12 X 84)	906	LF
24" DRILLED HOLE	877	LF
STRUCTURAL CONCRETE, BARRIER SLAB	93	CY
STRUCTURAL CONCRETE, WALER	31	CY
BAR REINFORCING STEEL (EPOXY COATED) (WALER)	12,462	LB
TIMBER LAGGING	18	MFBM
CLEAN AND PAINT STEEL SOLDIER PILING	LUMP	SUM
TUBULAR BICYCLE RAILING	174	LF
CONCRETE BARRIER (TYPE 80 MODIFIED)	179	LF

Daniel T Adams
DESIGN ENGINEER

	BY	CHECKED
DESIGN	W. Hou	D. Azzam
DETAILS	Y. Tang	D. Azzam
QUANTITIES	W. Hou	D. Azzam

LOAD & RESISTANCE FACTOR DESIGN — LIVE LOADING: HL93 W/"LOW-BOY": PERMIT DESIGN VEHICLE

LAYOUT — BY W. Hou — CHECKED D. Azzam

SPECIFICATIONS — BY D. Vargas — PLANS AND SPECS COMPARED D. Vargas

ORIGINAL SCALE IN INCHES FOR REDUCED PLANS 0 1 2 3

STATE OF CALIFORNIA
DEPARTMENT OF TRANSPORTATION

DIVISION OF ENGINEERING SERVICES
STRUCTURE DESIGN
DESIGN BRANCH 10

BRIDGE NO. 10E0035
POST MILE 22.67

DOS RIOS SLIPS WALL
GENERAL PLAN

UNIT: 3589
PROJECT NUMBER & PHASE: 0112000136
CONTRACT NO.: 01-0B5401

DISREGARD PRINTS BEARING EARLIER REVISION DATES

REVISION DATES 01-22-15 5-16-16 2-26-16

SHEET 1 OF 13

USERNAME => s132662 DATE PLOTTED => 16-AUG-2016 TIME PLOTTED => 0:24

STRUCTURES DESIGN GENERAL PLAN SHEET (ENGLISH) (REV.09-01-10)

FILE => 10e0035agp01.dgn

DIST	COUNTY	ROUTE	POST MILES TOTAL PROJECT	SHEET No.	TOTAL SHEETS
01	MEN	162	13.9,22.7	48	59

REGISTERED CIVIL ENGINEER 5/27/16 DATE

June 13, 2016
PLANS APPROVAL DATE

REGISTERED PROFESSIONAL ENGINEER SHANDAN WENDY HOU No. 71037 Exp. 6-30-17 CIVIL STATE OF CALIFORNIA

The State of California or its officers or agents shall not be responsible for the accuracy or completeness of scanned copies of this plan sheet.

INDEX TO PLANS

SHEET No.	TITLE
1	GENERAL PLAN
2	INDEX TO PLANS
3	STRUCTURE PLAN NO. 1
4	STRUCTURE PLAN NO. 2
5	FOUNDATION PLAN
6	TYPICAL SECTION
7	SOLDIER PILE WALL LAGGING DETAILS
8	SOLDIER PILE WALL WITH WALERS DETAILS
9	SUBHORIZONTAL GROUND ANCHOR DETAILS
10	TUBULAR BICYCLE RAILING
11	LOG OF TEST BORINGS SHEET 1 OF 3
12	LOG OF TEST BORINGS SHEET 2 OF 3
13	LOG OF TEST BORINGS SHEET 3 OF 3

STANDARD PLANS DATED 2010

	A10A	ABBREVIATIONS (SHEET 1 OF 2)
RSP	A10B	ABBREVIATIONS (SHEET 2 OF 2)
	A10C	LINES AND SYMBOLS (SHEET 1 OF 3)
	A10D	LINES AND SYMBOLS (SHEET 2 OF 3)
	A10E	LINES AND SYMBOLS (SHEET 3 OF 3)
RSP	A10F	LEGEND - SOIL (SHEET 1 OF 2)
RSP	A10G	LEGEND - SOIL (SHEET 2 OF 2)
	A10H	LEGEND - ROCK
RSP	B11-60	CONCRETE BARRIER TYPE 80 (SHEET 1 OF 2)

STANDARD PLAN SHEET NO.

DETAIL NO.

GENERAL NOTES

DESIGN: AASHTO LRFD Bridge Design Specifications, 4th Edition with California Amendments.

LIVE LOAD: 240 PSI equivalent to 2 feet soil weight

SOIL PARAMETERS: (For determination of Design Lateral Earth Pressures)

To the depth of 20′ below roadway surface
$\phi = 20°$, $\gamma = 125$ pcf
Below the depth of 20′
$\phi = 36°$, $\gamma = 140$ pcf

STEEL SOLDIER PILES: Grade 50
Fy = 50,000 psi
fs = 27,500 psi

REINFORCED CONCRETE: f′c = 4000 psi (Walers); f′c = 3600 psi (concrete barrier slab)
fy = 60 ksi
n = 8

STRUCTURAL TIMBER: Treated Douglas Fir, Grade No. 1 or better.
Timber to be full sawn

PRESTRESSING STEEL (GROUND ANCHORS): FDL = Factored Design Load on ground anchor (kips)
FTL = Factored Test Load (kips)
LL = Lock-Off Load (kips)

fpu = Minimum ultimate tensile strength of prestressing steel (ksi)

As (Min) = Minimum cross sectional area of prestressing steel in ground anchor tendon (square inches)

$$As\ (Min) = \frac{1.0\ FTL}{0.75\ fpu}$$

$$As\ (Min) = \frac{1.0\ FTL}{0.80\ fpu}$$

All ground anchors
FTL = 180 kips

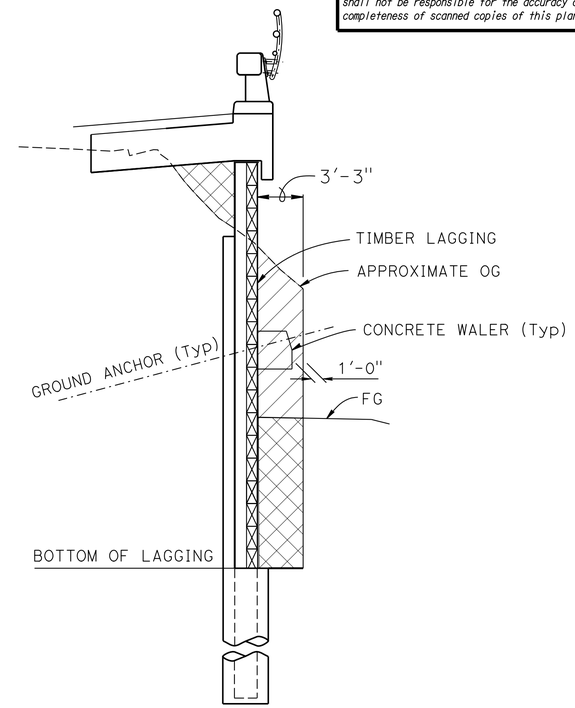

LIMITS OF PAYMENT FOR EXCAVATION & BACKFILL

NO SCALE

LEGEND:

Indicates structure excavation, Soldier Pile Wall

Indicates Structure backfill, Soldier Pile wall

NOTE:
THE CONTRACTOR MUST VERIFY ALL CONTROLLING FIELD DIMENSIONS BEFORE ORDERING OR FABRICATING ANY MATERIAL.

	BY	CHECKED
DESIGN	W. Hou	D. Azzam
DETAILS	Y. Tang	D. Azzam
QUANTITIES	W. Hou	D. Azzam

STATE OF CALIFORNIA
DEPARTMENT OF TRANSPORTATION

DIVISION OF ENGINEERING SERVICES
STRUCTURE DESIGN
DESIGN BRANCH 10

BRIDGE NO. 10E0035
POST MILE 22.67

DOS RIOS SLIPS WALL
INDEX TO PLANS

STRUCTURES DESIGN DETAIL SHEET (ENGLISH) (REV. 09-01-10)

ORIGINAL SCALE IN INCHES FOR REDUCED PLANS 0 1 2 3

UNIT: 3589
PROJECT NUMBER & PHASE: 0112000136
CONTRACT NO.: 01-0B5401

DISREGARD PRINTS BEARING EARLIER REVISION DATES

REVISION DATES: 6-08-15 11-06-15 2-26-16 4-28-16

SHEET 2 OF 13

FILE => 10e0035aitp02.dgn

USERNAME => s132662 DATE PLOTTED => 16-AUG-2016 TIME PLOTTED => 10:24

DIST	COUNTY	ROUTE	POST MILES TOTAL PROJECT	SHEET No.	TOTAL SHEETS
01	MEN	162	13.9,22.7	49	59

REGISTERED CIVIL ENGINEER 5/27/16 DATE

June 13, 2016
PLANS APPROVAL DATE

REGISTERED PROFESSIONAL ENGINEER SHANDAN WENDY HOU No. 71037 Exp. 6-30-17 CIVIL STATE OF CALIFORNIA

The State of California or its officers or agents shall not be responsible for the accuracy or completeness of scanned copies of this plan sheet.

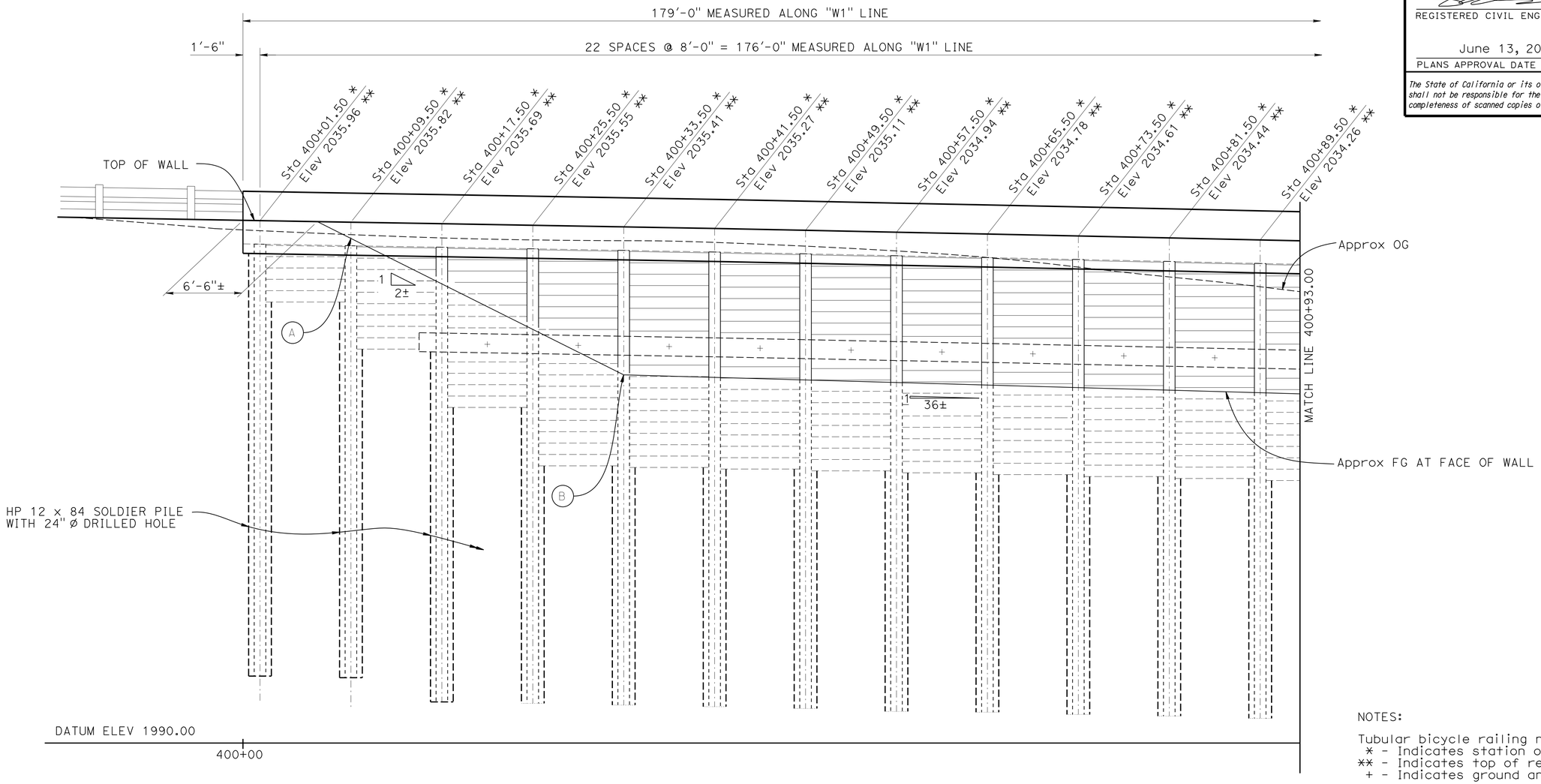

Pile No.	P1	P2	P3	P4	P5	P6	P7	P8	P9	P10	P11	P12
Top of Pile Elev.	2033.76	2033.62	2033.49	2033.35	2033.21	2033.07	2032.91	2032.74	2032.58	2032.41	2032.24	2032.06
Pile Tip Elev.	1995.76	1995.62	1993.49	1993.35	1993.21	1993.07	1992.91	1992.74	1992.58	1992.41	1992.24	1992.06

Logging Panel	L1	L2	L3	L4	L5	L6	L7	L8	L9	L10	L11	L12
No. Lagging Members	5	9	14	19	19	19	19	19	19	19	19	19

NOTES:

Tubular bicycle railing not shown for clarity.
* - Indicates station on "W1" line.
** - Indicates top of retaining wall elevation.
\+ - Indicates ground anchor location.

Point (A) Elevation: 2034.39

Point (B) Elevation: 2022.39

NOTE:
THE CONTRACTOR MUST VERIFY ALL CONTROLLING FIELD DIMENSIONS BEFORE ORDERING OR FABRICATING ANY MATERIAL.

ELEVATION

1" = 5'-0"

	BY	CHECKED
DESIGN	W. Hou	D. Azzam
DETAILS	Y. Tang	D. Azzam
QUANTITIES	W. Hou	D. Azzam

STATE OF CALIFORNIA
DEPARTMENT OF TRANSPORTATION

DIVISION OF ENGINEERING SERVICES
STRUCTURE DESIGN
DESIGN BRANCH 10

BRIDGE NO. 10E0035
POST MILE 22.67

DOS RIOS SLIPS WALL
STRUCTURE PLAN No. 1

STRUCTURES DESIGN DETAIL SHEET (ENGLISH) (REV. 09-01-10)

ORIGINAL SCALE IN INCHES FOR REDUCED PLANS 0 1 2 3

UNIT: 3589
PROJECT NUMBER & PHASE: 0112000136
CONTRACT NO.: 01-085401

DISREGARD PRINTS BEARING EARLIER REVISION DATES

REVISION DATES 6-08-15 2-26-16 2-19-16

SHEET 3 OF 13

FILE => 10e0035csp03.dgn

USERNAME => s132662 DATE PLOTTED => 16-AUG-2016 TIME PLOTTED => 10:24

DIST	COUNTY	ROUTE	POST MILES TOTAL PROJECT	SHEET No.	TOTAL SHEETS
01	MEN	162	13.9,22.7	50	59

REGISTERED CIVIL ENGINEER 5/27/16 DATE

June 13, 2016
PLANS APPROVAL DATE

REGISTERED PROFESSIONAL ENGINEER SHANDAN WENDY HOU No. 71037 Exp. 6-30-17 CIVIL STATE OF CALIFORNIA

The State of California or its officers or agents shall not be responsible for the accuracy or completeness of scanned copies of this plan sheet.

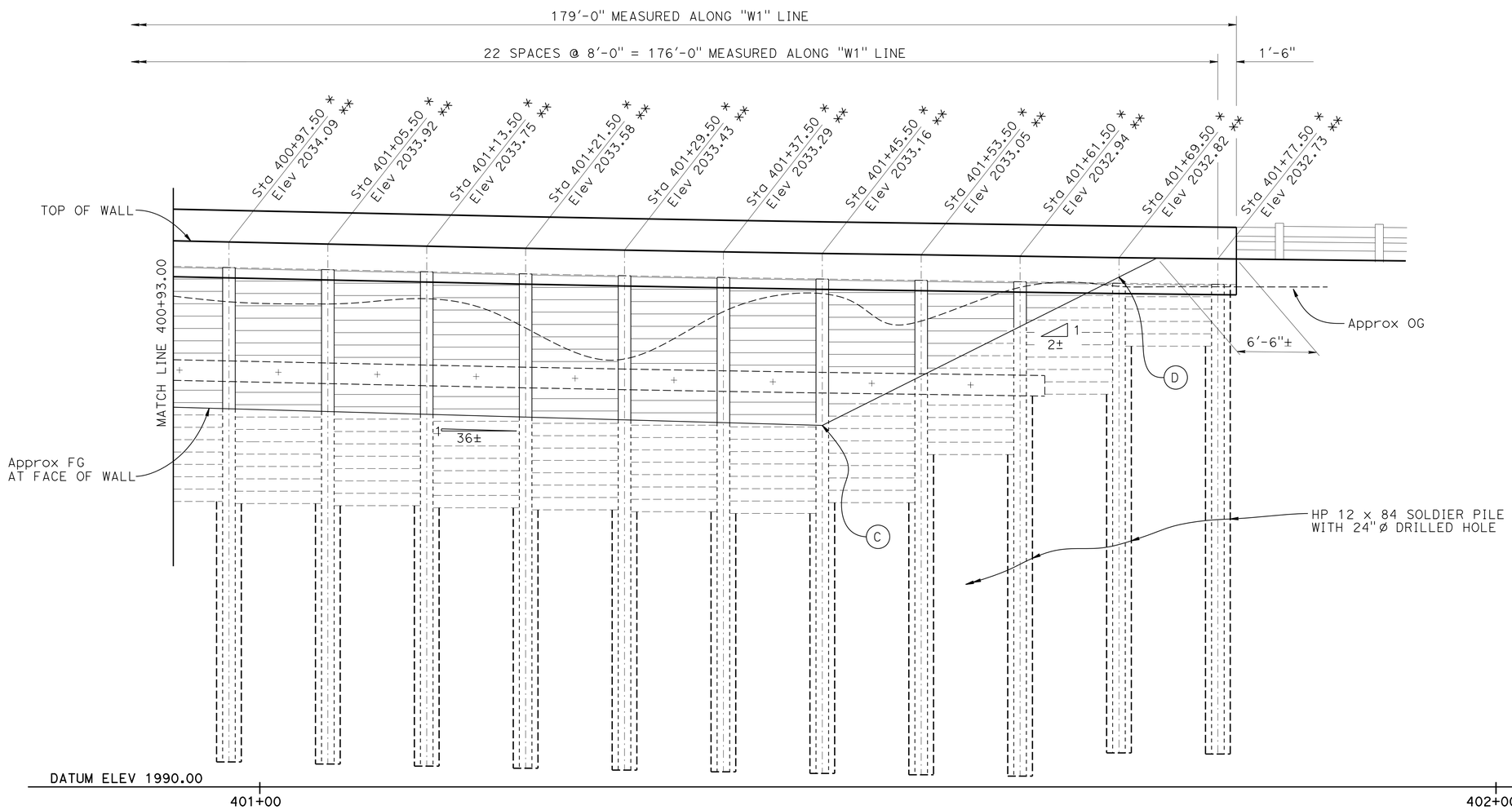

Pile No.	P13	P14	P15	P16	P17	P18	P19	P20	P21	P22	P23
Top of Pile Elev.	2031.89	2031.72	2031.55	2031.38	2031.23	2031.09	2030.96	2030.85	2030.74	2030.62	2030.53
Pile Tip Elev.	1991.89	1991.72	1991.55	1991.38	1991.23	1991.09	1990.96	1990.85	1990.74	1992.62	1992.53

Logging Panel	L12	L13	L14	L15	L16	L17	L18	L19	L20	L21	L22
No. Lagging Members	19	19	19	19	19	19	19	18	14	9	5

ELEVATION

1" = 5'-0"

NOTES:

Tubular bicycle railing not shown for clarity.
* - Indicates station on "W1" line.
** - Indicates top of retaining wall elevation.
+ - Indicates ground anchor location.

Point (C) Elevation: 2019.25

Point (D) Elevation: 2031.25

NOTE:
THE CONTRACTOR MUST VERIFY ALL CONTROLLING FIELD DIMENSIONS BEFORE ORDERING OR FABRICATING ANY MATERIAL.

	BY	CHECKED
DESIGN	W. Hou	D. Azzam
DETAILS	Y. Tang	D. Azzam
QUANTITIES	W. Hou	D. Azzam

STATE OF CALIFORNIA
DEPARTMENT OF TRANSPORTATION

DIVISION OF ENGINEERING SERVICES
STRUCTURE DESIGN
DESIGN BRANCH 10

BRIDGE NO. 10E0035
POST MILE 22.67

DOS RIOS SLIPS WALL
STRUCTURE PLAN No. 2

STRUCTURES DESIGN DETAIL SHEET (ENGLISH) (REV. 09-01-10)

ORIGINAL SCALE IN INCHES FOR REDUCED PLANS 0 1 2 3

UNIT: 3589
PROJECT NUMBER & PHASE: 0112000136
CONTRACT NO.: 01-085401

DISREGARD PRINTS BEARING EARLIER REVISION DATES

REVISION DATES 6-08-15 2-19-16 2-26-16

SHEET 4 OF 13

FILE => 10e0035csp04.dgn

USERNAME => s132682 DATE PLOTTED => 16-AUG-2016 TIME PLOTTED => 10:24

DIST	COUNTY	ROUTE	POST MILES TOTAL PROJECT	SHEET No.	TOTAL SHEETS
01	Men	162	13.9,22.7	51	59

REGISTERED CIVIL ENGINEER 5/27/16 DATE

June 13, 2016
PLANS APPROVAL DATE

REGISTERED PROFESSIONAL ENGINEER
SHANDAN WENDY HOU
No. 71037
Exp. 6-30-17
CIVIL
STATE OF CALIFORNIA

The State of California or its officers or agents shall not be responsible for the accuracy or completeness of electronic copies of this plan sheet.

CURVE DATA

No.	R	Δ	T	L
A	150.00	63°39′58"	93.12	166.68
B	425.00	29°08′35"	110.48	216.17
C	166.00	11°36′16"	16.87	33.62

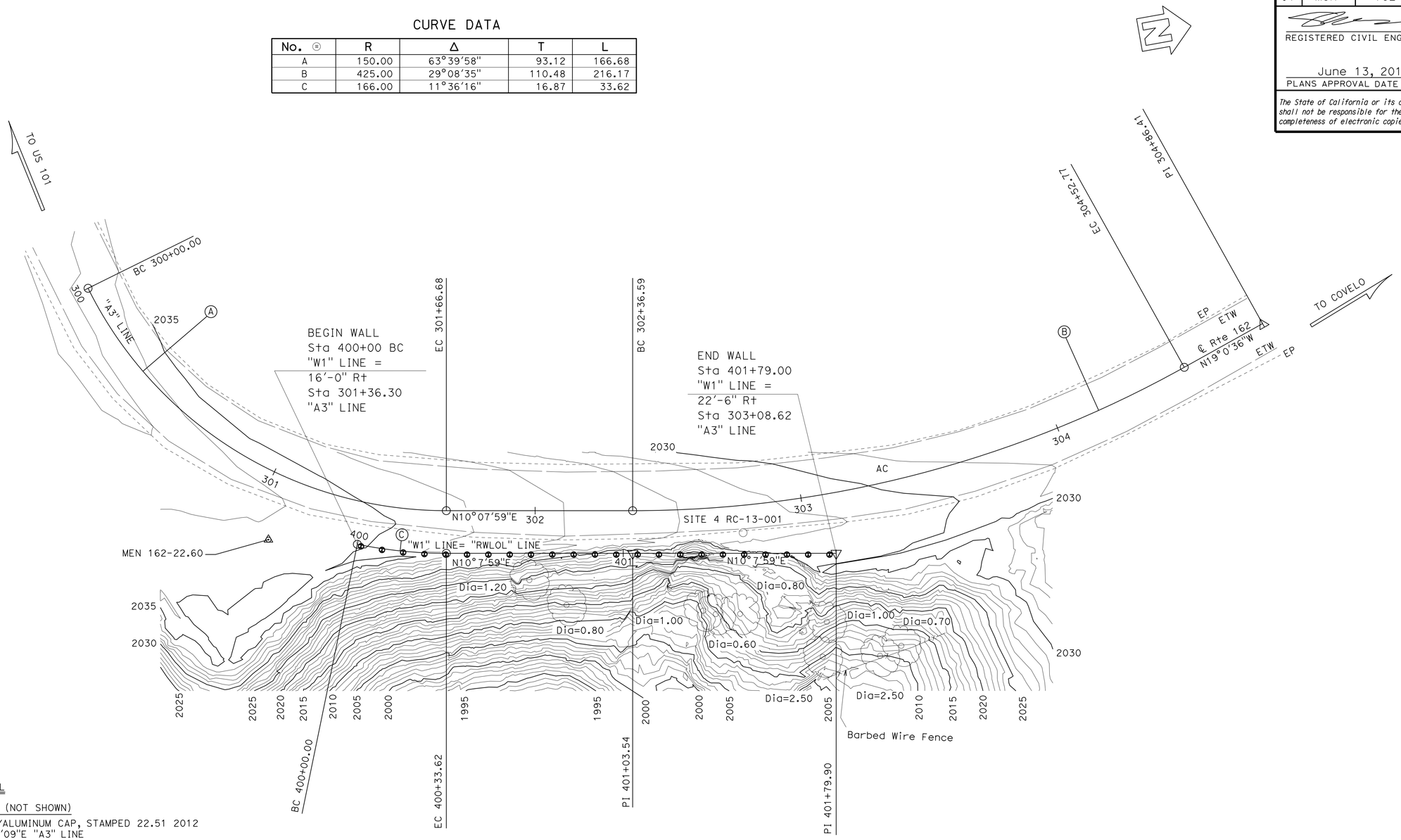

SURVEY CONTROL

MEN 162-22.51 (NOT SHOWN)

Fnd 5/8" REBAR/ALUMINUM CAP, STAMPED 22.51 2012
252.43′ N71°07′09"E "A3" LINE
Sta 300+00.00
N 2,391,211.14
E 6,207,356.80
Elev=2040.91

MEN 162-22.60

Fnd 5/8" REBAR/ALUMINUM CAP, STAMPED 22.60 2012
24.17′ Rt "A3" LINE
Sta 301+07.68
N 2,391,342.87
E 6,207,700.40
Elev=2035.67

PRELIMINARY INVESTIGATION SECTION

SCALE 1"=20′	VERT.DATUM NAVD88	PHOTOGRAMMETRY AS OF: X		
	HORZ.DATUM NAD83 (2004.69)	SURVEYED	BY DISTRICT	CHECKED BY D. IVY 10/2014
	ALIGNMENT TIES Dist TRAVERSE SHEET	DRAFTED	BY S. ZHENG 10/2014	CHECKED BY L. LEW 10/2014

DESIGN	BY W. Hou	CHECKED D. Azzam
DETAILS	BY Y. Tang	CHECKED D. Azzam
QUANTITIES	BY W. Hou	CHECKED D. Azzam

STATE OF CALIFORNIA
DEPARTMENT OF TRANSPORTATION

DIVISION OF ENGINEERING SERVICES
STRUCTURE DESIGN
DESIGN BRANCH 10

BRIDGE NO. 10E0035
POST MILE 22.67

DOS RIOS SLIPS WALL
FOUNDATION PLAN

STRUCTURES FOUNDATION PLAN SHEET (ENGLISH) (REV. 09-01-10)

ORIGINAL SCALE IN INCHES FOR REDUCED PLANS 0 1 2 3

UNIT: 3589
PROJECT NUMBER & PHASE: 0112000136 1 CONTRACT NO.: 01-0B5401

SUBMITTAL DATE	REVISION DATES				SHEET	OF
10-13-2014	6-11-15				5	13

USERNAME => s132662 DATE PLOTTED => 16-AUG-2016 TIME PLOTTED => 10:24

FILE => 10e0035fp105.dgn

DIST	COUNTY	ROUTE	POST MILES TOTAL PROJECT	SHEET No.	TOTAL SHEETS
01	MEN	162	13.9,22.7	52	59

REGISTERED CIVIL ENGINEER 5/27/16 DATE

June 13, 2016
PLANS APPROVAL DATE

REGISTERED PROFESSIONAL ENGINEER SHANDAN WENDY HOU No. 71037 Exp. 6-30-17 CIVIL STATE OF CALIFORNIA

The State of California or its officers or agents shall not be responsible for the accuracy or completeness of scanned copies of this plan sheet.

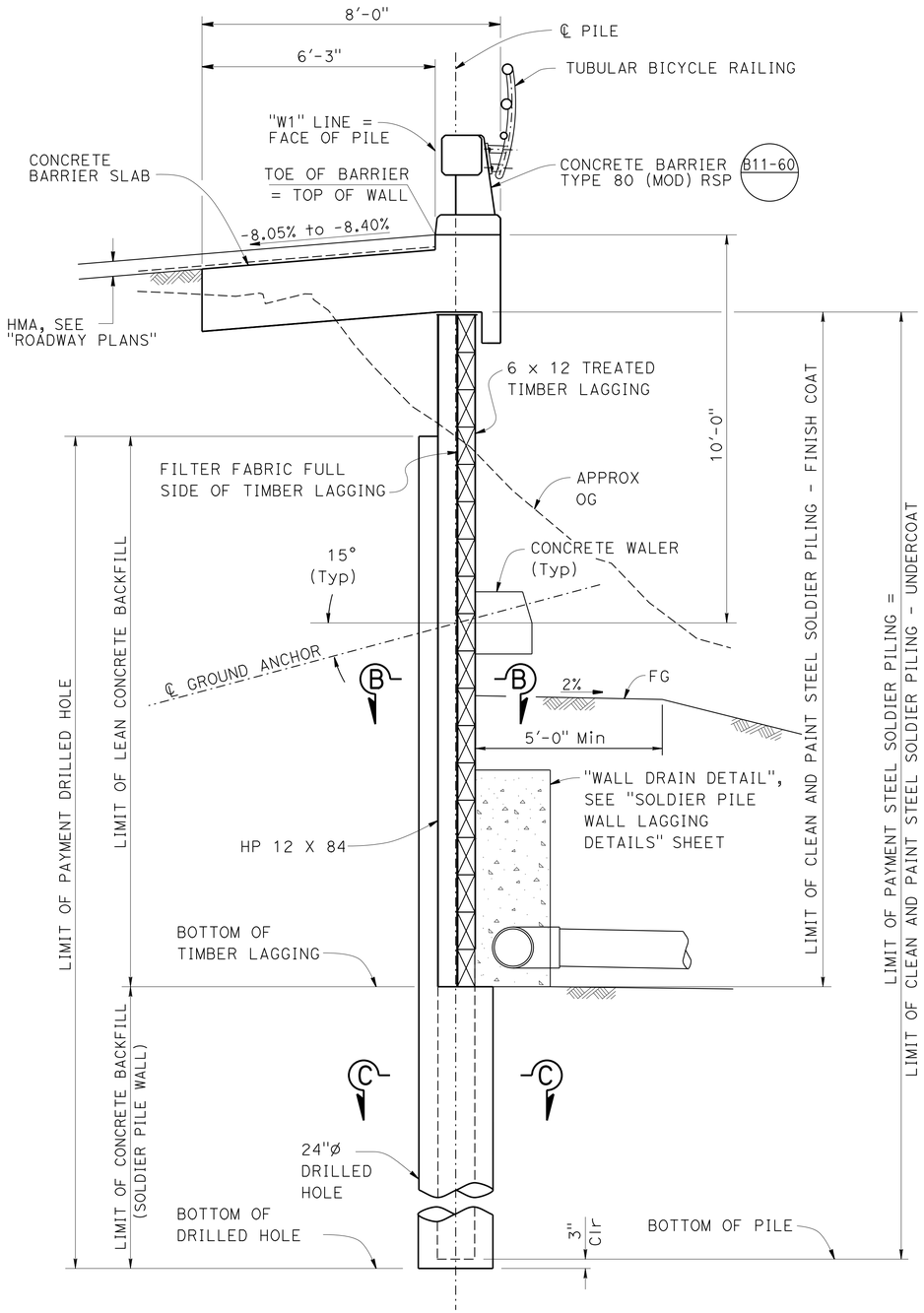

TYPICAL SECTION

SCALE: ½" = 1'-0"

NOTE:
THE CONTRACTOR MUST VERIFY ALL CONTROLLING FIELD DIMENSIONS BEFORE ORDERING OR FABRICATING ANY MATERIAL.

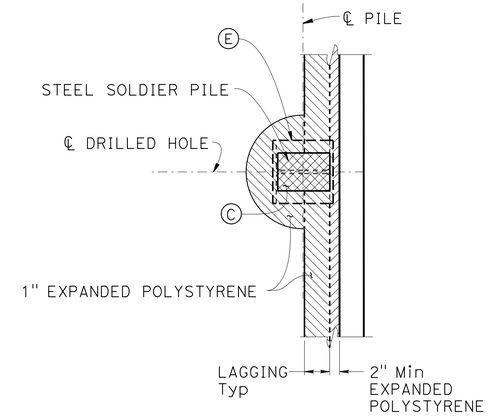

SECTION A-A

NO SCALE

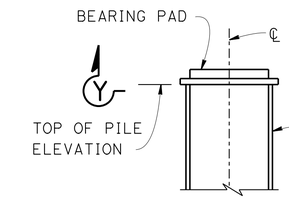

DETAIL X

NO SCALE

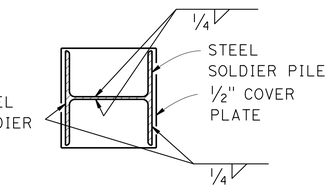

SECTION Y-Y

NO SCALE

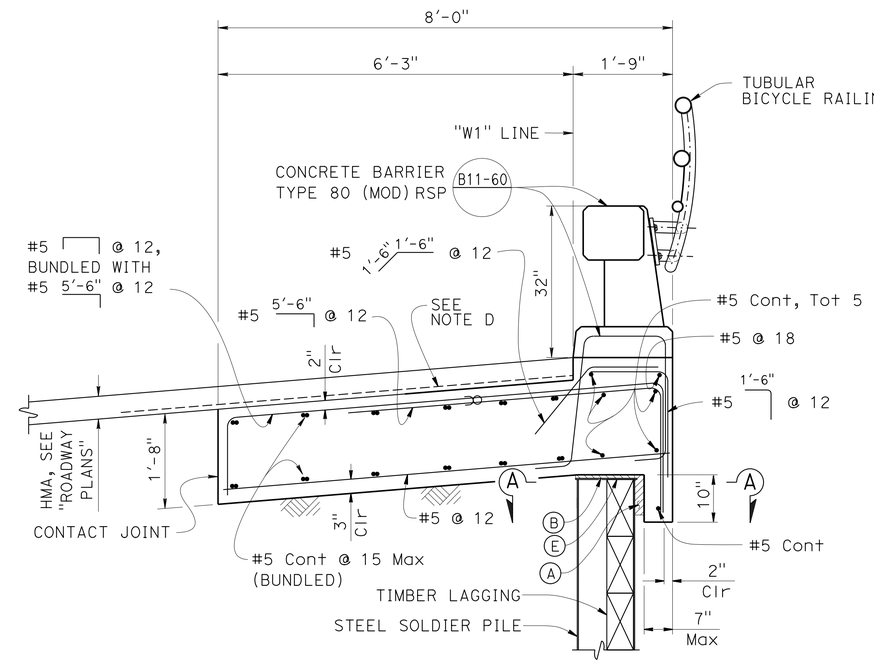

CONCRETE BARRIER SLAB

¾" = 1'-0"

NOTES:

Ⓐ 2" Min Expanded polystyrene

Ⓑ 1" Expanded Polystyrene or Bearing Pad

Ⓒ 1" x 8" x 10" Elastomeric Bearing Pad bonded to top of pile, See "DETAIL X"

Ⓓ Pavement reinforcing fabric, see "ROADWAY PLANS"

Ⓔ ½" x 13" x 13" cover plate, see "SECTION Y-Y".

1. Clearance to reinforcing steel in concrete barrier to be 1".
2. Not all barrier reinforcement shown.
3. No expansion joints in concrete barrier or barrier slab within wall limits.
4. For SECTION B-B" and "SECTION C-C", see "SOLDIER PILE WALL LAGGING DETAILS" sheet.

LEGEND:

- Indicates 1" Expanded polystyrene
- Indicates 2" Min Expanded polystyrene
- Indicates Bearing Pad
- ∝ Indicates bundled bars

	BY	CHECKED
DESIGN	W. Hou	D. Azzam
DETAILS	Y. Tang	D. Azzam
QUANTITIES	W. Hou	D. Azzam

STATE OF CALIFORNIA
DEPARTMENT OF TRANSPORTATION

DIVISION OF ENGINEERING SERVICES
STRUCTURE DESIGN
DESIGN BRANCH 10

BRIDGE NO. 10E0035
POST MILE 22.67

DOS RIOS SLIPS WALL
TYPICAL SECTION

STRUCTURES DESIGN DETAIL SHEET (ENGLISH) (REV. 09-01-10)

ORIGINAL SCALE IN INCHES FOR REDUCED PLANS 0 1 2 3

UNIT: 3589
PROJECT NUMBER & PHASE: 0112000136
CONTRACT NO.: 01-0B5401

DISREGARD PRINTS BEARING EARLIER REVISION DATES

REVISION DATES: 6-04-15 03-26-16 11-10-15

SHEET 6 OF 13

FILE => 10e0035kts06.dgn

USERNAME => s132662 DATE PLOTTED => 16-AUG-2016 TIME PLOTTED => 10:25

DIST	COUNTY	ROUTE	POST MILES TOTAL PROJECT	SHEET No.	TOTAL SHEETS
01	MEN	162	13.9,22.7	53	59

REGISTERED CIVIL ENGINEER 5/27/16 DATE

June 13, 2016
PLANS APPROVAL DATE

REGISTERED PROFESSIONAL ENGINEER SHANDAN WENDY HOU No. 71037 Exp. 6-30-17 CIVIL STATE OF CALIFORNIA

The State of California or its officers or agents shall not be responsible for the accuracy or completeness of scanned copies of this plan sheet.

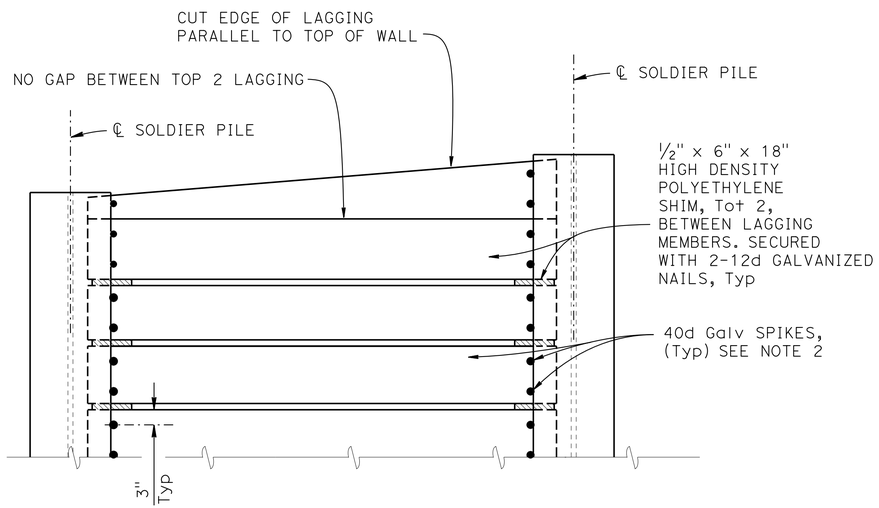

PART ELEVATION

NO SCALE

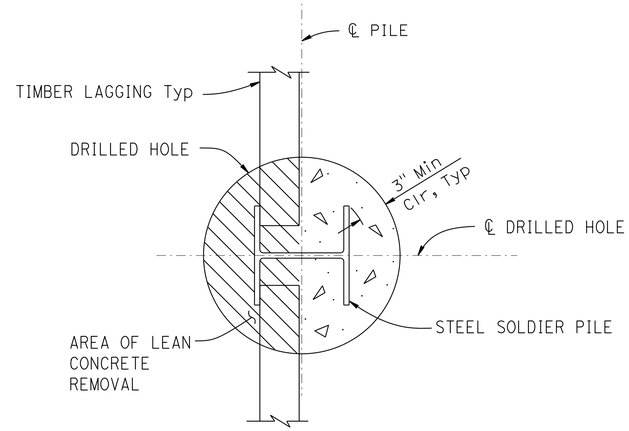

SECTION B-B

NO SCALE

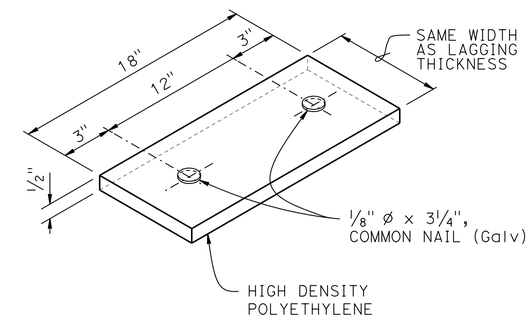

SHIM DETAIL

NO SCALE

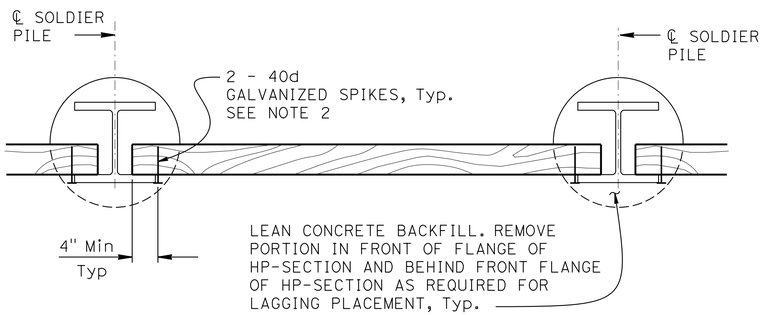

PART PLAN OF TIMBER LAGGING MEMBER

NO SCALE

NOTES:

1. No clipping of Timber Lagging corners allowed. Lagging corners may be chamfered to facilitate placement. Max 2 corners per lagging
2. Spikes must not be bent
3. For locations of "SECTION B-B" and "SECTION C-C" see"TYPICAL SECTION" sheet.

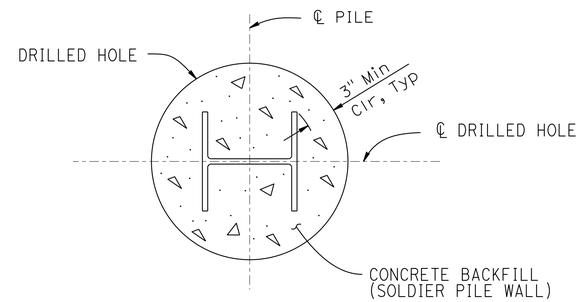

SECTION C-C

NO SCALE

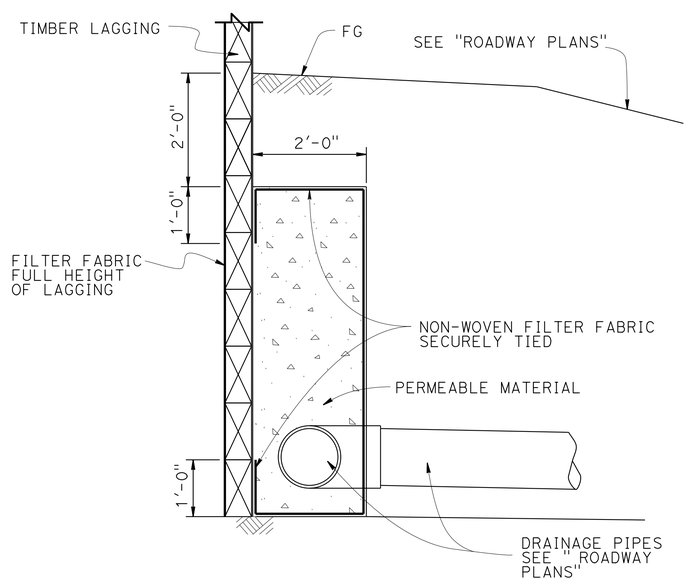

WALL DRAIN DETAIL

¾" = 1'-0"

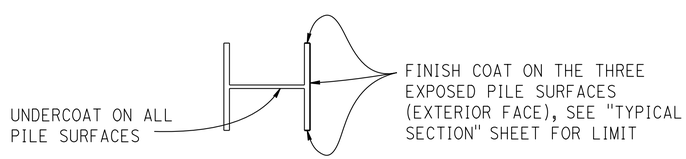

LIMITS OF CLEAN & PAINT STEEL SOLDIER PILES

NO SCALE

NOTE:
Finish coat must match color No. 30097 of Federal Standard

NOTE:
THE CONTRACTOR MUST VERIFY ALL CONTROLLING FIELD DIMENSIONS BEFORE ORDERING OR FABRICATING ANY MATERIAL.

	BY	CHECKED
DESIGN	W. Hou	D. Azzam
DETAILS	Y. Tang	D. Azzam
QUANTITIES	W. Hou	D. Azzam

STATE OF CALIFORNIA DEPARTMENT OF TRANSPORTATION

DIVISION OF ENGINEERING SERVICES STRUCTURE DESIGN DESIGN BRANCH 10

BRIDGE NO. 10E0035
POST MILE 22.67

DOS RIOS SLIPS WALL
SOLDIER PILE WALL LAGGING DETAILS

STRUCTURES DESIGN DETAIL SHEET (ENGLISH) (REV. 09-01-10)

ORIGINAL SCALE IN INCHES FOR REDUCED PLANS 0 1 2 3

UNIT: 3589
PROJECT NUMBER & PHASE: 0112000136
CONTRACT NO.: 01-0B5401

DISREGARD PRINTS BEARING EARLIER REVISION DATES

REVISION DATES 6-19-15 11-19-15 03-26-16

SHEET 7 OF 13

FILE => 10e0035pldt07.dgn

USERNAME => s133662 DATE PLOTTED => 16-AUG-2016 TIME PLOTTED => 10:25

DIST	COUNTY	ROUTE	POST MILES TOTAL PROJECT	SHEET No.	TOTAL SHEETS
01	MEN	162	13.9,22.7	54	59

REGISTERED CIVIL ENGINEER 5/27/16 DATE

June 13, 2016
PLANS APPROVAL DATE

REGISTERED PROFESSIONAL ENGINEER SHANDAN WENDY HOU No. 71037 Exp. 6-30-17 CIVIL STATE OF CALIFORNIA

The State of California or its officers or agents shall not be responsible for the accuracy or completeness of electronic copies of this plan sheet.

The components of this Bridge Standard Drawing have been prepared under the responsible charge of the Technical Owner, a registered civil engineer in the State of California. Refer to: http://www.dot.ca.gov/hq/esc/techpubs/manual/bridgemanuals/bridge-standard-detail-sheets/index.html.
The selection and proper application of the component design and any modifications shown have been prepared under the responsible charge of the registered civil engineer for the project.

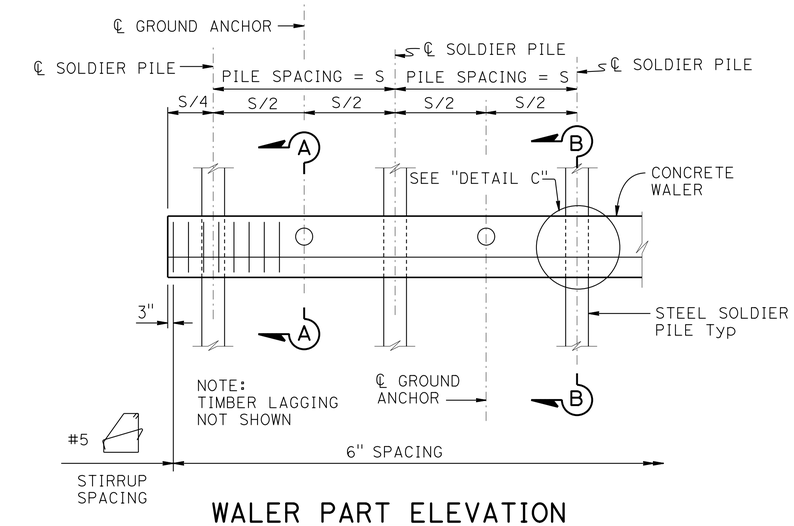

WALER PART ELEVATION

NO SCALE

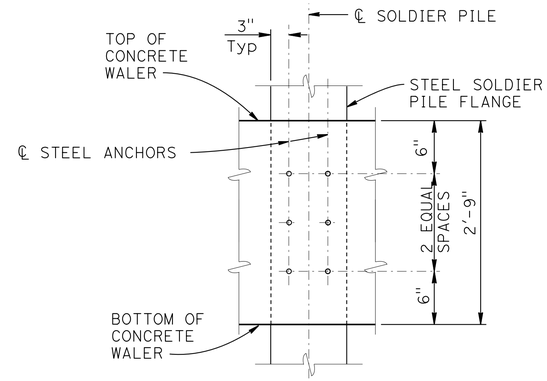

DETAIL C

NO SCALE

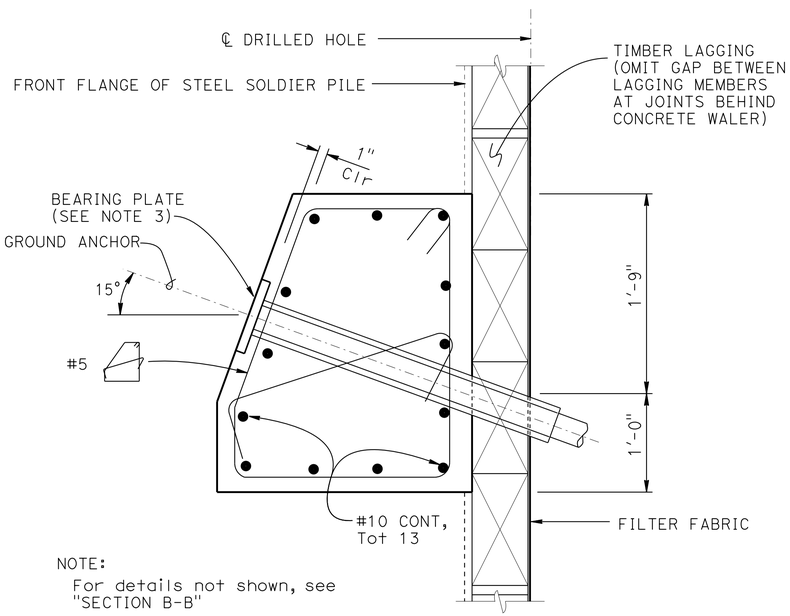

NOTE:
For details not shown, see "SECTION B-B"

SECTION A-A

1½" = 1'-0"

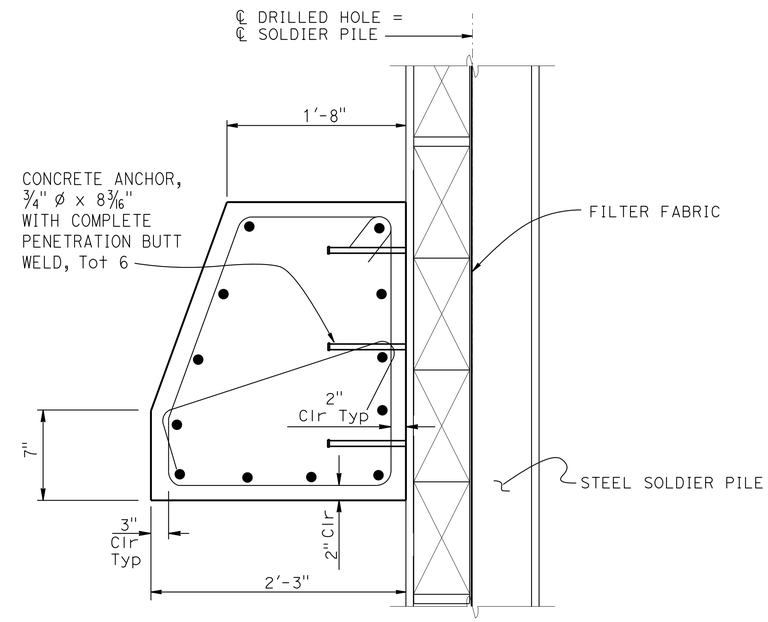

SECTION B-B

1½" = 1'-0"

NOTES:

1. Concrete walers may be poured to face of lagging.
2. Reinforcing steel to be epoxy coated.
3. Bearing plates may be recessed or on face of concrete waler

NOTE:
THE CONTRACTOR MUST VERIFY ALL CONTROLLING FIELD DIMENSIONS BEFORE ORDERING OR FABRICATING ANY MATERIAL.

STANDARD DRAWING

FILE NO. **xs12-060-1**

APPROVAL DATE October 2014

1 Details removed

STATE OF **CALIFORNIA** DEPARTMENT OF TRANSPORTATION

DIVISION OF ENGINEERING SERVICES

BRIDGE NO. 10E0035

POST MILE 22.67

DOS RIOS SLIPS WALL

SOLDIER PILE WALL WITH WALERS-DETAILS

DS OSD 2147A (ENGLISH STANDARD DRAWING "XS" BORDER REV. (02-02-11)

ORIGINAL SCALE IN INCHES FOR REDUCED PLANS 0 1 2 3

UNIT: 3589
PROJECT NUMBER & PHASE: 0112000136
CONTRACT NO.: 01-0B5401

DISREGARD PRINTS BEARING EARLIER REVISION DATES

REVISION DATES 6-24-14 8-15-14 3-28-16

SHEET 8 OF 13

FILE => 10e0035udt08.dgn

USERNAME => s132662 DATE PLOTTED => 16-AUG-2016

DIST	COUNTY	ROUTE	POST MILES TOTAL PROJECT	SHEET No.	TOTAL SHEETS
01	MEN	162	13.9,22.7	55	59

REGISTERED CIVIL ENGINEER 5/27/16 DATE

June 13, 2016
PLANS APPROVAL DATE

REGISTERED PROFESSIONAL ENGINEER SHANDAN WENDY HOU No. 71037 Exp. 6-30-17 CIVIL STATE OF CALIFORNIA

The State of California or its officers or agents shall not be responsible for the accuracy or completeness of electronic copies of this plan sheet.

The components of this Bridge Standard Drawing have been prepared under the responsible charge of the Technical Owner, a registered civil engineer in the State of California. Refer to: http://www.dot.ca.gov/hq/esc/techpubs/manual/bridgemanuals/bridge-standard-detail-sheets/index.html. The selection and proper application of the component design and any modifications shown have been prepared under the responsible charge of the registered civil engineer for the project.

GENERAL NOTES

DESIGN:

AASHTO LRFD Bridge Design Specifications, 4th Edition with California Amendments.

PRESTRESSING STEEL:

Bars - ASTM Designation: A722 Type II (150 ksi)

Strand Tendons-ASTM Designation: A416 (270 Ksi Low Relaxation steel)

FTL = Factored Test Load per anchor (Kips)

fpu = Minimum tensile strength of prestressing steel

As = Minimum cross sectional area of prestressing steel in ground anchor (square inch)

$$As(Min) = \frac{1.0\ FTL}{0.75\ fpu} \quad \text{(Strands)}$$

$$As(Min) = \frac{1.0\ FTL}{0.80\ fpu} \quad \text{(Bars)}$$

NOTES:

(A) Level of initial grouting for drilled hole 6" in diameter or smaller

(B) Level of secondary grouting

(C) Level of initial grouting inside corrugated sheathing

(D) Bonded length shall be determined by the contractor

(F) For inclination, see PROJECT PLANS

(G) Face of Wall Excavation

NOTES:

1. Anchorage enclosure shall only be used when anchor head assembly is not enclosed in concrete.
2. Anchorage enclosure shall have provisions to allow injecting grout at low end and venting at high end. Galvanize after fabrication.
3. Silicone sealant to cover full width of flange.
4. Steel tube (Min thickness = 1/4") welded to bearing plate. Galvanize assembly after fabrication
5. Steel tube welded to bearing plate. Inside diameter of steel tube (Min thickness = 1/4") to be 1" greater than outside diameter of smooth sheathing.
6. Galvanize assembly after fabrication.
7. For other wall details, see PROJECT PLANS.

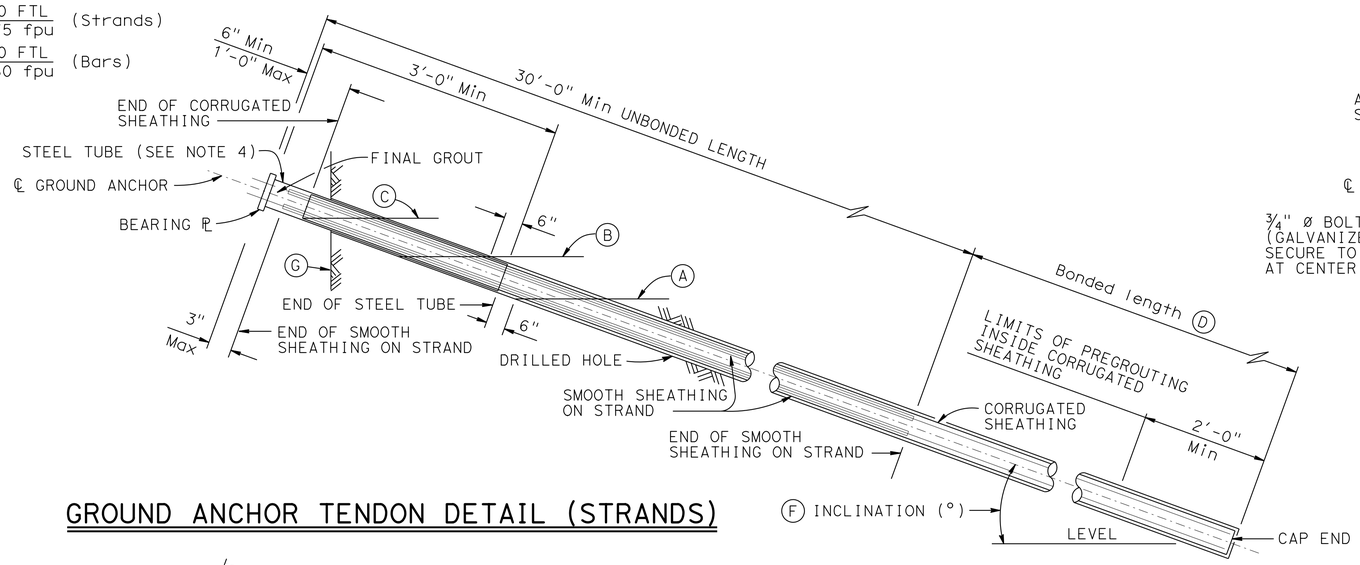

GROUND ANCHOR TENDON DETAIL (STRANDS)

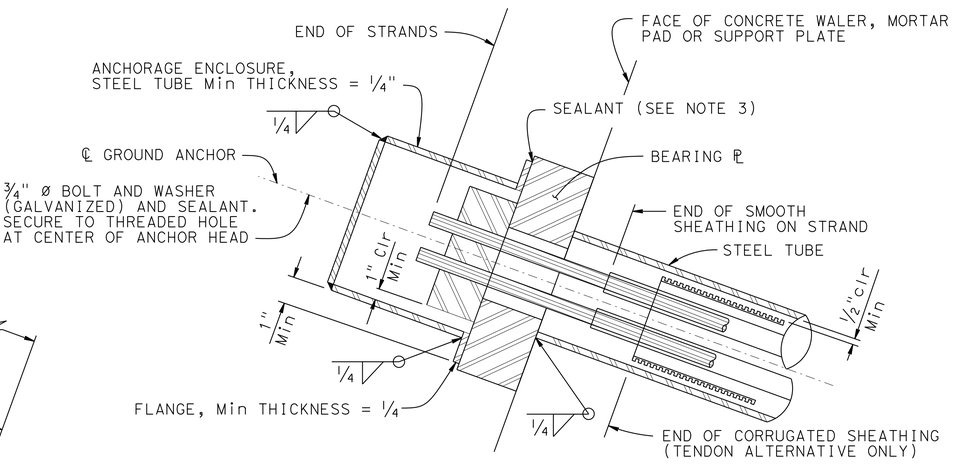

ALTERNATIVE X

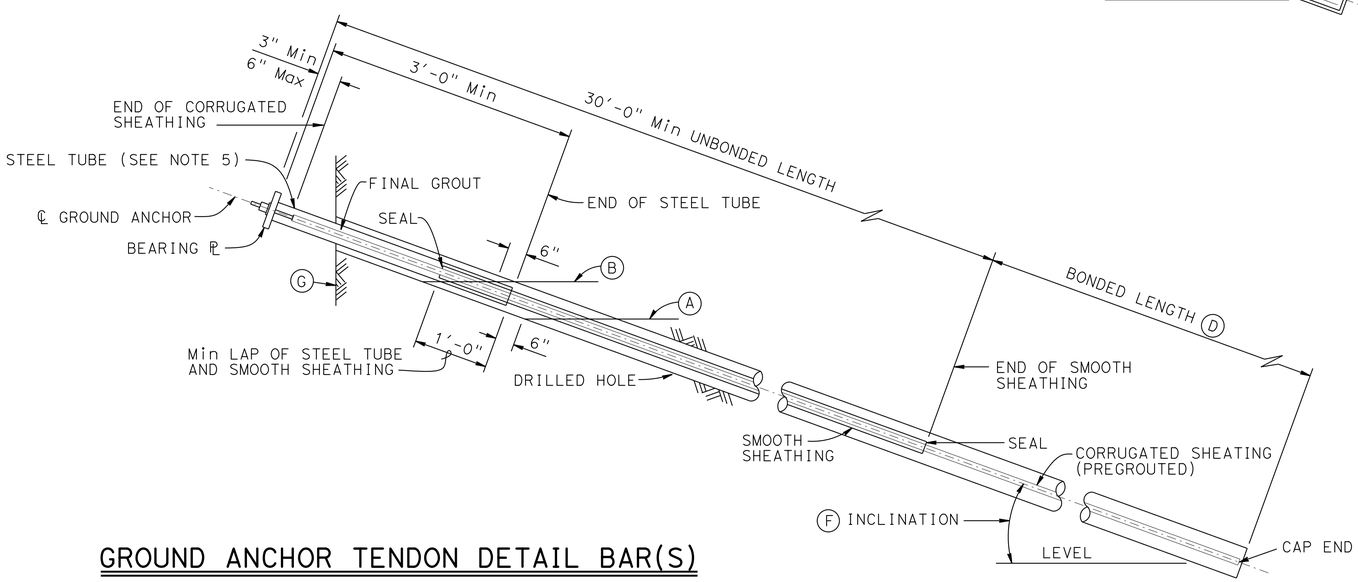

GROUND ANCHOR TENDON DETAIL BAR(S)

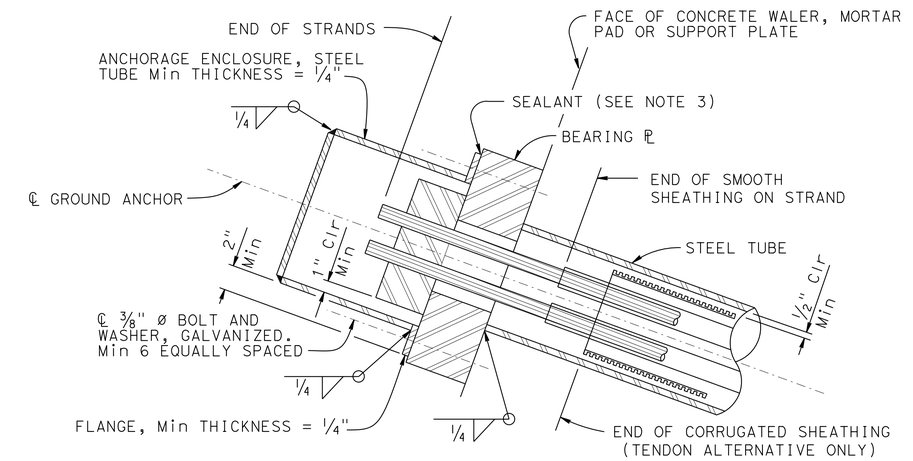

ALTERNATIVE Y

ANCHORAGE ENCLOSURE DETAILS

NO SCALE

REVISED STANDARD DRAWING		STATE OF CALIFORNIA DEPARTMENT OF TRANSPORTATION	DIVISION OF ENGINEERING SERVICES	BRIDGE NO. 10E0035	DOS RIOS SLIPS WALL
FILE NO. xs12-040	APPROVAL DATE July 2014			POST MILE 22.67	SUB HORIZONTAL GROUND ANCHOR DETAILS

DS OSD 2147A (ENGLISH STANDARD DRAWING "XS" BORDER REV. (02-02-11)

ORIGINAL SCALE IN INCHES FOR REDUCED PLANS 0 1 2 3

UNIT: 3589
PROJECT NUMBER & PHASE: 0112000136
CONTRACT NO.: 01-0B5401

DISREGARD PRINTS BEARING EARLIER REVISION DATES

REVISION DATES: 6-08-15 | 03-26-16 | 2-26-16

SHEET 9 OF 13

FILE => 10e0035umisc_hgadt09.dgn

USERNAME => s132662 DATE PLOTTED => 16-AUG-2016 TIME PLOTTED => 10:25

DIST	COUNTY	ROUTE	POST MILES TOTAL PROJECT	SHEET No.	TOTAL SHEETS
01	Men	162	13.9,22.7	56	59

REGISTERED CIVIL ENGINEER 5/27/16 DATE

June 13, 2016
PLANS APPROVAL DATE

REGISTERED PROFESSIONAL ENGINEER SHANDAN WENDY HOU No. 71037 Exp. 6-30-17 CIVIL STATE OF CALIFORNIA

The State of California or its officers or agents shall not be responsible for the accuracy or completeness of scanned copies of this plan sheet.

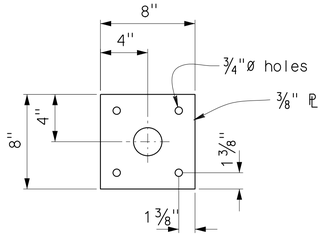

LOWER RAIL ANCHOR PLATE DETAIL
No Scale

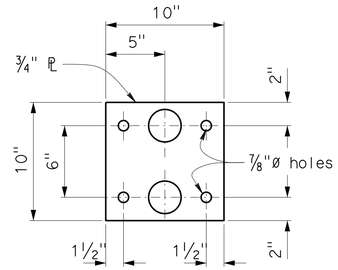

POST ANCHOR PLATE
No Scale

NOTES:

1. Galvanize rail assembly after fabrication.
2. Post shall be normal to railing.
3. Rail tubes shall be shop bent or fabricated to fit horizontal curve when radius is less than 981'.
4. Tube splices shall be located in the tubes spanning deck or wall joints. Increase joint width in tubes to match expansion joint width and increase sleeve length correspondingly.
5. Top rail tube shall be continuous over not less than two posts except a short post spacing is permitted near deck or wall joints, electroliers, or other rail discontinuities as noted.
6. For 3 NPS XS pipe rails use 2.5 NPS STD pipe for inner coupling tube and for 2 NPS STD pipe use 1.5 NPS STD pipe for coupling tube railing.

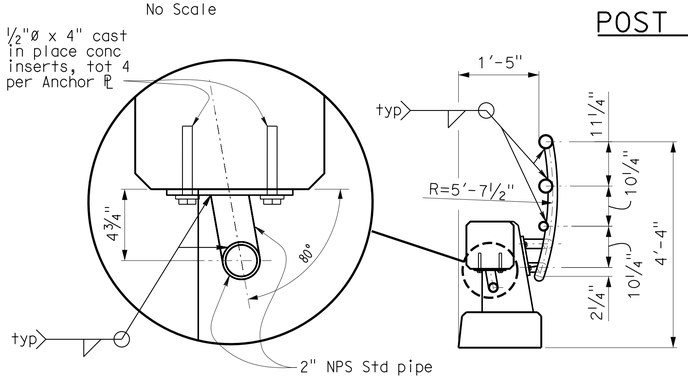

SECTION A-A
No Scale

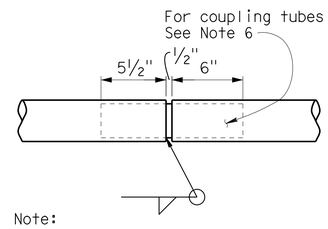

Note:
Coupling tube welded to one rail only so as to allow for expansion and contraction.

TUBE COUPLING DETAIL
No Scale

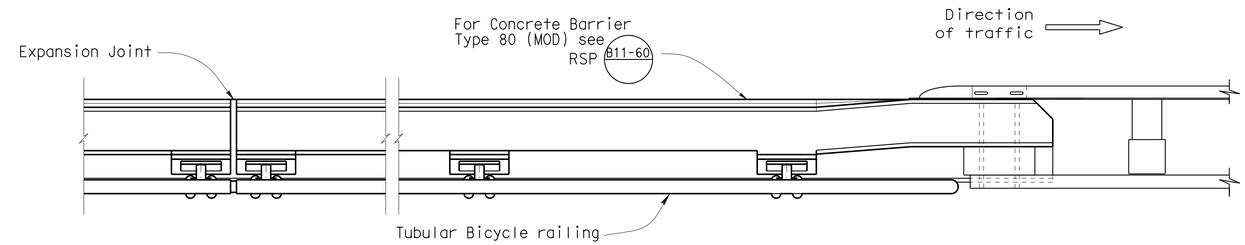

PLAN
No Scale

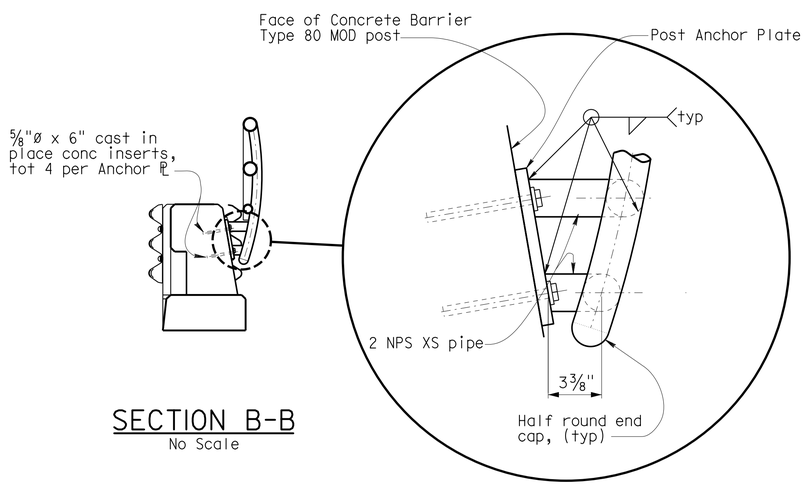

SECTION B-B
No Scale

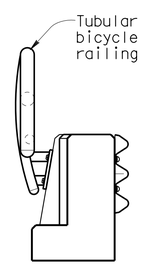

SECTION C-C
(End View)
No Scale

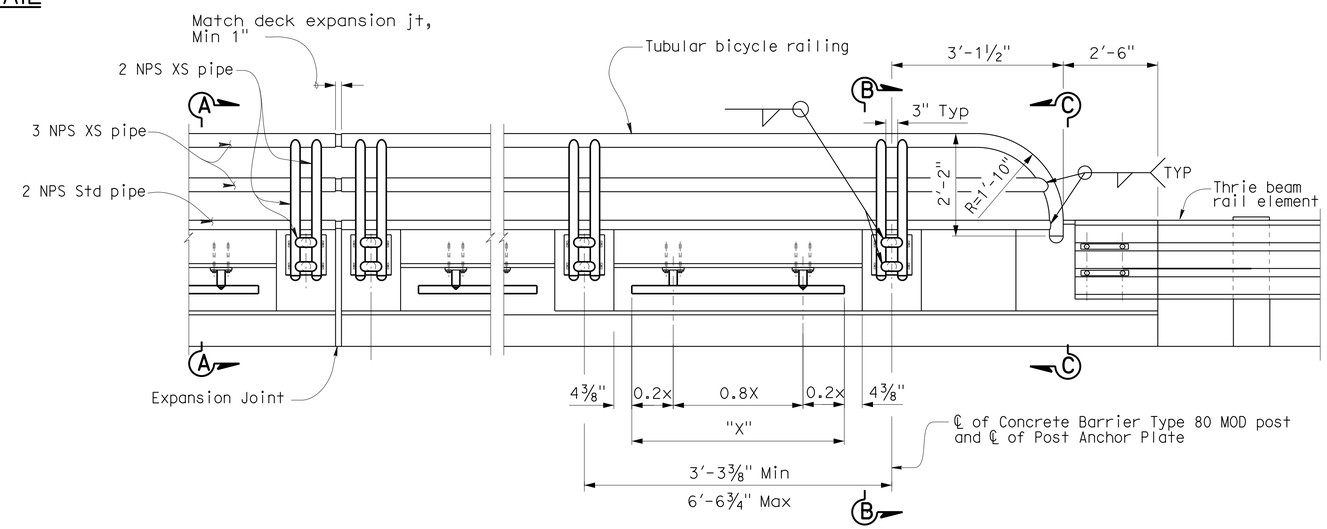

ELEVATION
No Scale

DESIGN	BY W. Hou	CHECKED D. Azzam	
DETAILS	BY Y. Tang	CHECKED D. Azzam	
QUANTITIES	BY W. Hou	CHECKED D. Azzam	

STATE OF CALIFORNIA
DEPARTMENT OF TRANSPORTATION

DIVISION OF ENGINEERING SERVICES
STRUCTURE DESIGN
DESIGN BRANCH 10

BRIDGE NO. 10E0035
POST MILE 22.67

DOS RIOS SLIPS WALL
TUBULAR BICYCLE RAILING

STRUCTURES DESIGN DETAIL SHEET (ENGLISH) (REV. 09-01-10)

ORIGINAL SCALE IN INCHES FOR REDUCED PLANS 0 1 2 3

UNIT: 3586
PROJECT NUMBER & PHASE: 0112000136
CONTRACT NO.: 01-0B5401

DISREGARD PRINTS BEARING EARLIER REVISION DATES

REVISION DATES 6-04-15 6-09-15 8-20-15

SHEET 10 OF 13

FILE => 10e0035umiscbrdt10.dgn

USERNAME => s133662 DATE PLOTTED => 16-AUG-2016 TIME PLOTTED => 10:25

DIST	COUNTY	ROUTE	POST MILES TOTAL PROJECT	SHEET No	TOTAL SHEETS
01	Men	162	13.9,22.7	57	59

Ali Kaddoura 8-17-15
REGISTERED CIVIL ENGINEER DATE

June 13, 2016
PLANS APPROVAL DATE

REGISTERED PROFESSIONAL ENGINEER
Ali Kaddoura
No. C55710
Exp. 12-31-16
CIVIL
STATE OF CALIFORNIA

The State of California or its officers or agents shall not be responsible for the accuracy or completeness of electronic copies of this plan sheet.

This LOTB sheet was prepared in accordance with the Caltrans Soil & Rock Logging, Classification, & Presentation Manual (2010 Edition).

See 2010 Standard Plans A10F and A10G for Soil Legend, and A10H for Rock Legend.

BENCH MARK

SURVEY CONTROL
5/8" Rebar Alumium cap stamped 22.60 2012
(PRHV 2260)
Location: Rt. 24.17', "A3" Line R162,
Station 301+07.68
E: 6207700.4000, N: 2391342.8700
Horizontal Datum NAD83,
Vertical Datum NAVD 88 GPS
Elevation = 2035.67'

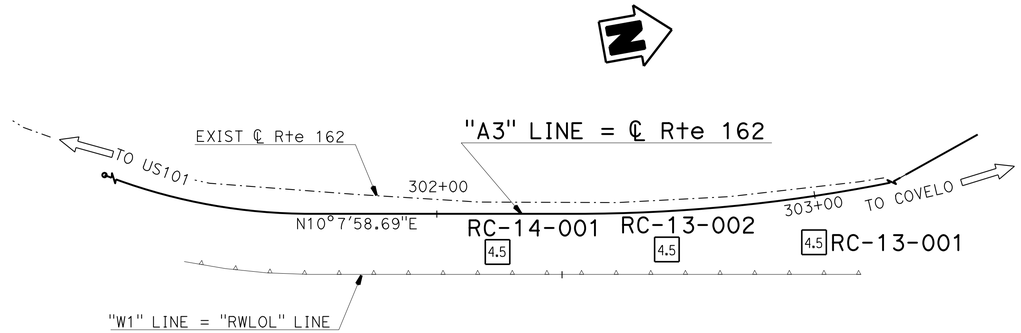

PLAN

1"=20'

PROFILE

Horiz: 1" = 10'
Vert: 1" = 10'

ENGINEERING SERVICES	MATERIALS AND GEOTECHNICAL SERVICES	STATE OF CALIFORNIA DEPARTMENT OF TRANSPORTATION	DIVISION OF ENGINEERING SERVICES STRUCTURE DESIGN DESIGN BRANCH 10	BRIDGE NO. 10E0035 / POST MILE 22.67	DOS RIOS SLIPS WALL
FUNCTIONAL SUPERVISOR NAME: R. Mahallati	DRAWN BY: F. Nguyen / CHECKED BY:	FIELD INVESTIGATION BY: E. Kretschmer / W. Bertucci			LOG OF TEST BORINGS 1 OF 3

OGS CIVIL LOG OF TEST BORINGS SHEET

ORIGINAL SCALE IN INCHES FOR REDUCED PLANS 0 1 2 3

UNIT: 3643
PROJECT NUMBER & PHASE: 01120001361
CONTRACT NO.: 01-0B5404

DISREGARD PRINTS BEARING EARLIER REVISION DATES

REVISION DATES: 06-16-15 06-25-15 07-13-15 08-07-15

SHEET 11 OF 13

FILE => 10e0035zltb11.dgn

USERNAME => s132662 DATE PLOTTED => 16-AUG-2016 TIME PLOTTED => 10:25

DIST	COUNTY	ROUTE	POST MILES TOTAL PROJECT	SHEET No	TOTAL SHEETS
01	Men	162	13.9,22.7	58	59

Ali Kaddoura 8-17-15
REGISTERED CIVIL ENGINEER DATE

June 13, 2016
PLANS APPROVAL DATE

REGISTERED PROFESSIONAL ENGINEER
Ali Kaddoura
No. C55710
Exp. 12-31-16
CIVIL
STATE OF CALIFORNIA

The State of California or its officers or agents shall not be responsible for the accuracy or completeness of electronic copies of this plan sheet.

This LOTB sheet was prepared in accordance with the Caltrans Soil & Rock Logging, Classification, & Presentation Manual (2010 Edition).

See 2010 Standard Plans A10F and A10G for Soil Legend, and A10H for Rock Legend.

FOR PLAN VIEW, SEE
"LOG OF TEST BORINGS 1 OF 3"

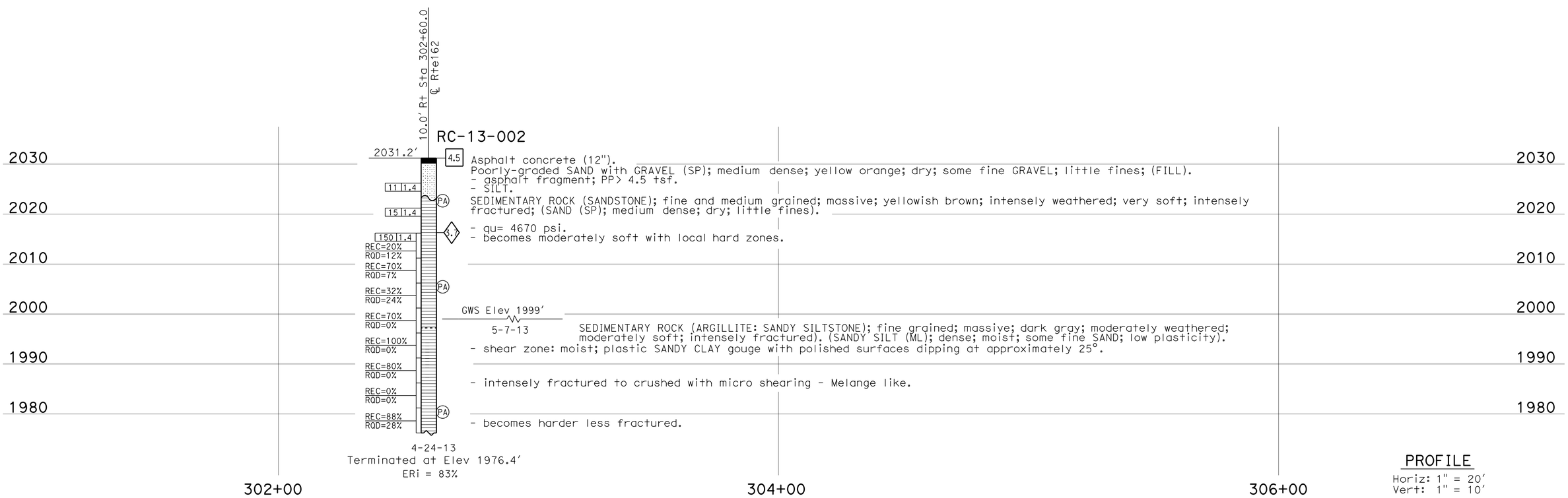

PROFILE
Horiz: 1" = 20'
Vert: 1" = 10'

ENGINEERING SERVICES	MATERIALS AND GEOTECHNICAL SERVICES	STATE OF CALIFORNIA DEPARTMENT OF TRANSPORTATION	DIVISION OF ENGINEERING SERVICES STRUCTURE DESIGN DESIGN BRANCH 10	BRIDGE NO. 10E0035 POST MILE 22.67	DOS RIOS SLIPS WALL
FUNCTIONAL SUPERVISOR NAME: R. Mahallati	DRAWN BY: F. Nguyen CHECKED BY:	FIELD INVESTIGATION BY: W. Bertucci			LOG OF TEST BORINGS 2 OF 3

OGS CIVIL LOG OF TEST BORINGS SHEET

ORIGINAL SCALE IN INCHES FOR REDUCED PLANS 0 1 2 3

UNIT: 3643
PROJECT NUMBER & PHASE: 01120001361 CONTRACT NO.: 01-0B5404

DISREGARD PRINTS BEARING EARLIER REVISION DATES

REVISION DATES: 06-16-15 06-25-15 07-13-15 08-07-15

SHEET 12 OF 13

FILE => 10e0035zltb12.dgn

USERNAME => s132662 DATE PLOTTED => 16-AUG-2016 TIME PLOTTED => 10:25

DIST	COUNTY	ROUTE	POST MILES TOTAL PROJECT	SHEET No	TOTAL SHEETS
01	Men	162	13.9,22.7	59	59

Ali Kaddoura 8-17-15
REGISTERED CIVIL ENGINEER DATE

June 13, 2016
PLANS APPROVAL DATE

REGISTERED PROFESSIONAL ENGINEER
Ali Kaddoura
No. C55710
Exp. 12-31-16
CIVIL
STATE OF CALIFORNIA

The State of California or its officers or agents shall not be responsible for the accuracy or completeness of electronic copies of this plan sheet.

This LOTB sheet was prepared in accordance with the Caltrans Soil & Rock Logging, Classification, & Presentation Manual (2010 Edition).

See 2010 Standard Plans A10F and A10G for Soil Legend, and A10H for Rock Legend.

FOR PLAN VIEW, SEE
"LOG OF TEST BORINGS 1 OF 3"

ENGINEERING SERVICES	MATERIALS AND GEOTECHNICAL SERVICES	STATE OF CALIFORNIA DEPARTMENT OF TRANSPORTATION	DIVISION OF ENGINEERING SERVICES STRUCTURE DESIGN DESIGN BRANCH 10	BRIDGE NO. 10E0035 POST MILE 27.6	DOS RIOS SLIPS WALL
FUNCTIONAL SUPERVISOR NAME: R. Mahallati	DRAWN BY: F. Nguyen CHECKED BY:	FIELD INVESTIGATION BY: B. Barnes / W. Bertucci			LOG OF TEST BORINGS 3 OF 3

OGS CIVIL LOG OF TEST BORINGS SHEET

ORIGINAL SCALE IN INCHES FOR REDUCED PLANS 0 1 2 3

UNIT: 3643
PROJECT NUMBER & PHASE: 01120001361 CONTRACT NO.: 01-0B5404

DISREGARD PRINTS BEARING EARLIER REVISION DATES

REVISION DATES: 06-16-15 06-26-15 07-13-15 08-07-15 SHEET 13 OF 13

FILE => 10e0035zltb13.dgn

USERNAME => s132662 DATE PLOTTED => 16-AUG-2016 TIME PLOTTED => 10:25