ACNH-ER-19C7(004)E

Dist	COUNTY	ROUTE	POST MILES TOTAL PROJECT	SHEET No.	TOTAL SHEETS
01	Men	101	3.8, 5.3	1	99

STATE OF CALIFORNIA
DEPARTMENT OF TRANSPORTATION

PROJECT PLANS FOR CONSTRUCTION ON
STATE HIGHWAY
IN MENDOCINO COUNTY
AT 0.7 MILE NORTH OF COMMINSKY STATION ROAD AND AT 0.8 MILE SOUTH OF PIETA CREEK BRIDGE

TO BE SUPPLEMENTED BY STANDARD PLANS DATED 2010

INDEX OF PLANS

SHEET No.	DESCRIPTION
1	TITLE AND LOCATION MAP
2-3	TYPICAL CROSS SECTIONS
4-5	LAYOUTS
6-7	PROFILES AND SUPERELEVATION DIAGRAMS
8-12	CONSTRUCTION DETAILS
13-25	DRAINAGE PLANS, PROFILES, DETAILS AND QUANTITIES
26	CONSTRUCTION AREA SIGNS
27-29	TRAFFIC HANDLING PLANS AND QUANTITIES
30	PAVEMENT DELINEATION AND SIGN PLANS AND QUANTITIES
31	PAVEMENT DELINEATION AND SIGN QUANTITIES
32-33	SUMMARY OF QUANTITIES
34-38	EROSION CONTROL LEGEND, PLANS, DETAILS AND QUANTITIES
39	PLANT LIST AND PLANTING PLAN
40	IRRIGATION PLAN AND QUANTITIES
41-62	REVISED STANDARD PLANS

STRUCTURE PLANS

63-76	FORMOLI SLIDE RETAINING WALL, Br No. 10E0037
77-99	PEREGRINE SLIDE RETAINING WALL, Br No. 10E0036

THE STANDARD PLANS LIST APPLICABLE TO THIS CONTRACT IS INCLUDED IN THE NOTICE TO BIDDERS AND SPECIAL PROVISIONS BOOK.

LOCATION MAP

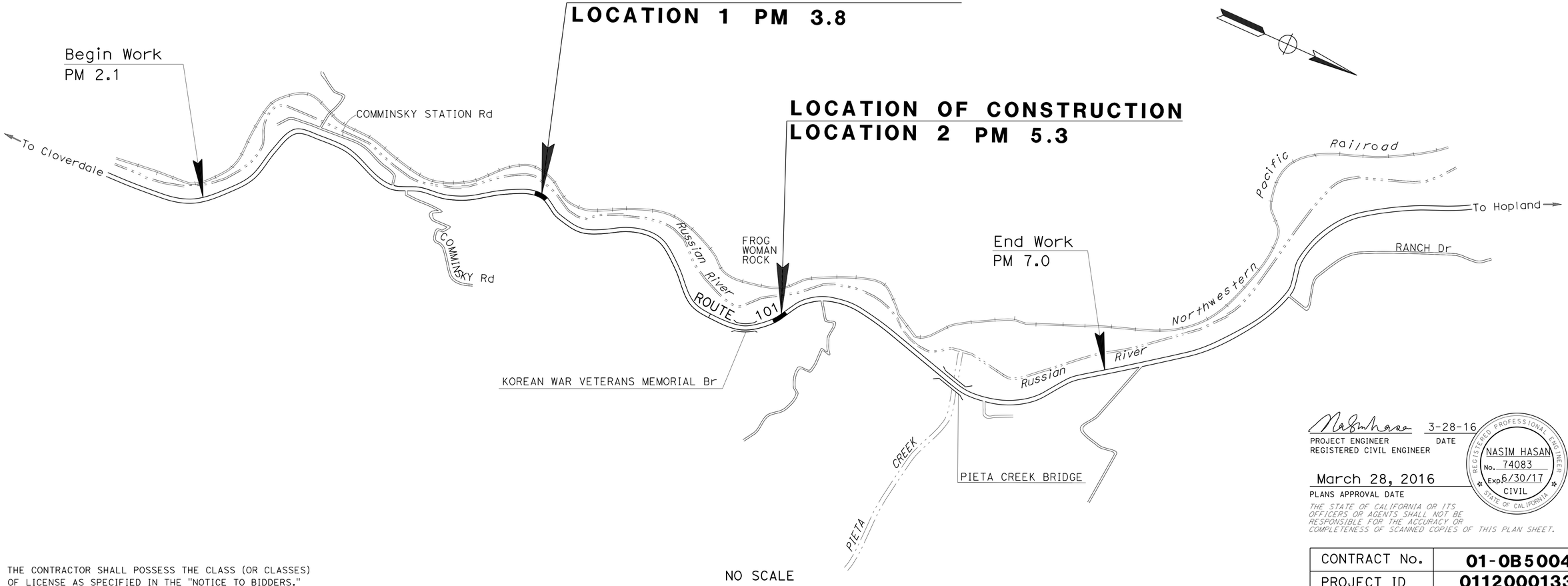

NO SCALE

THE CONTRACTOR SHALL POSSESS THE CLASS (OR CLASSES) OF LICENSE AS SPECIFIED IN THE "NOTICE TO BIDDERS."

PROJECT MANAGER: STEVE BLAIR
DESIGN MANAGER: ALI KIANI

NASIM HASAN 3-28-16
PROJECT ENGINEER DATE
REGISTERED CIVIL ENGINEER

March 28, 2016
PLANS APPROVAL DATE

REGISTERED PROFESSIONAL ENGINEER NASIM HASAN No. 74083 Exp. 6/30/17 CIVIL STATE OF CALIFORNIA

THE STATE OF CALIFORNIA OR ITS OFFICERS OR AGENTS SHALL NOT BE RESPONSIBLE FOR THE ACCURACY OR COMPLETENESS OF SCANNED COPIES OF THIS PLAN SHEET.

CONTRACT No.	01-0B5004
PROJECT ID	0112000133

LAST REVISION 00-00-00 | DATE PLOTTED => 18-APR-2016 | TIME PLOTTED => 13:10

Dist	COUNTY	ROUTE	POST MILES TOTAL PROJECT	SHEET No.	TOTAL SHEETS
01	Men	101	3.8, 5.3	2	99

REGISTERED CIVIL ENGINEER 3-28-16 DATE

3-28-16
PLANS APPROVAL DATE

REGISTERED PROFESSIONAL ENGINEER NASIM HASAN No. 74083 Exp. 6-30-17 CIVIL STATE OF CALIFORNIA

THE STATE OF CALIFORNIA OR ITS OFFICERS OR AGENTS SHALL NOT BE RESPONSIBLE FOR THE ACCURACY OR COMPLETENESS OF SCANNED COPIES OF THIS PLAN SHEET.

NOTES:

1. DIMENSIONS OF THE PAVEMENT STRUCTURES (STRUCTURAL SECTIONS) ARE SUBJECT TO TOLERANCES SPECIFIED IN THE "G1"NDARD SPECIFICATIONS.
2. SUPERELEVATIONS ARE SHOWN ON THE SUPERELEVATION DIAGRAMS.
3. EXACT LOCATIONS AND TYPES OF HMA DIKE ARE SHOWN ON THE LAYOUTS AND SUMMARY OF QUANTITIES SHEETS.
4. FOR SAFETY EDGE SEE REVISED Std PLANS P74 & P75
5. FOR RETAINING WALLS SEE STRUCTURE PLANS

PAVEMENT CLIMATE REGION

LOW MOUNTAIN

DESIGN DESIGNATION (ROUTE 101)

ADT (2015) = 16,300
ADT (2025) = 19,900
DHV (2035) = 1,960 TI_{20} = 11.5
$ESAL_{20}$ = 7,844,800 V = 70 MPH

ABBREVIATION:

SRS SHOULDER RUMBLE STRIP (HMA, GROUND-IN-INDENTATION)

CRS CENTERLINE RUMBLE STRIP (HMA, GROUND-IN-INDENTATION)

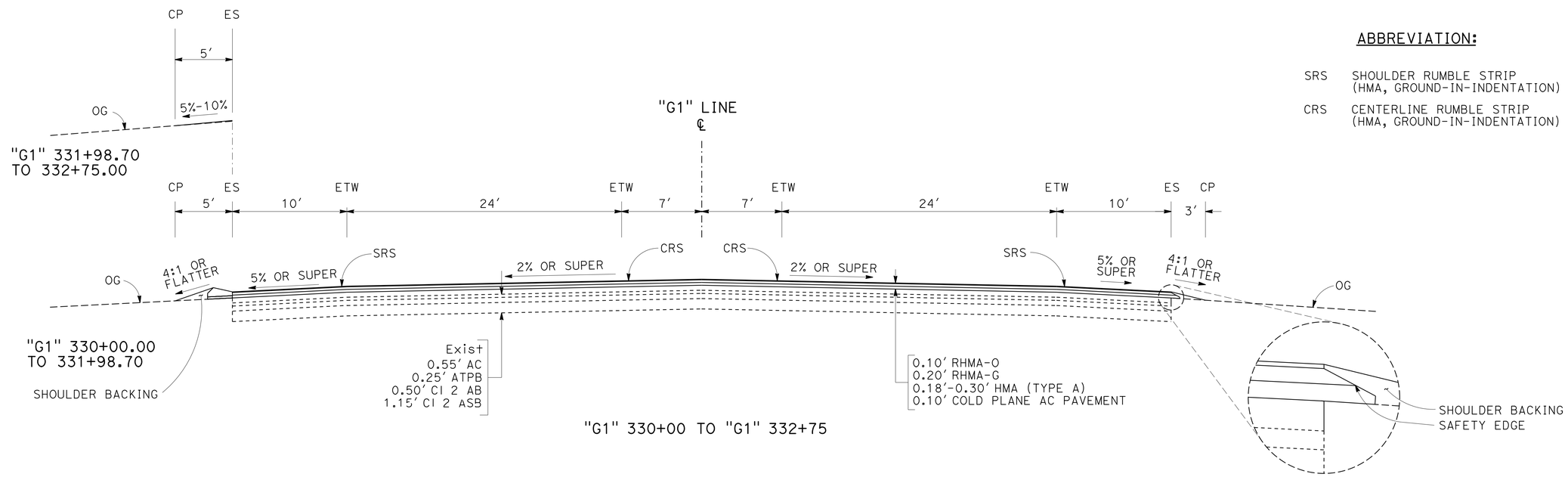

"G1" 330+00 TO "G1" 332+75

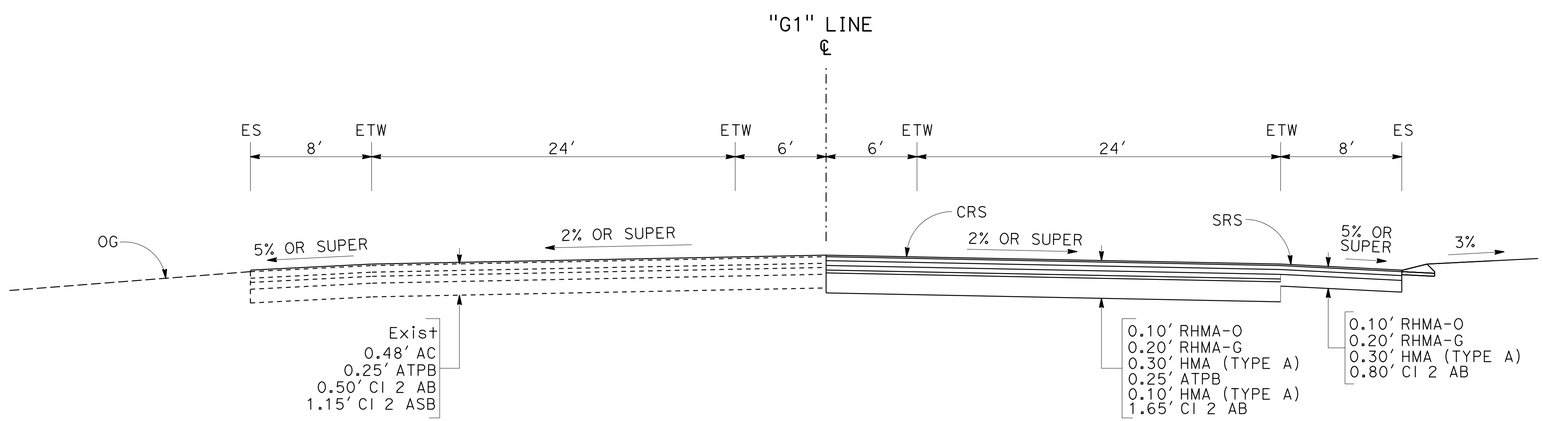

SOUTHBOUND

"G1" 261+30 TO 265+40

NORTHBOUND

"G1" 261+30 TO 265+40

ROUTE 101

TYPICAL CROSS SECTIONS

NO SCALE

X-1

STATE OF CALIFORNIA - DEPARTMENT OF TRANSPORTATION
Caltrans
03-DESIGN

FUNCTIONAL SUPERVISOR: ALI KIANI
CALCULATED-DESIGNED BY: NASIM HASAN
CHECKED BY: DAVID HOPPER
REVISED BY
DATE REVISED

LAST REVISION 00-00-00
DATE PLOTTED => 18-APR-2016
TIME PLOTTED => 09:19

Dist	COUNTY	ROUTE	POST MILES TOTAL PROJECT	SHEET No.	TOTAL SHEETS
01	Men	101	3.8, 5.3	3	99

REGISTERED CIVIL ENGINEER 3-28-16 DATE

3-28-16
PLANS APPROVAL DATE

REGISTERED PROFESSIONAL ENGINEER
NASIM HASAN
No. 74083
Exp. 6-30-17
CIVIL
STATE OF CALIFORNIA

THE STATE OF CALIFORNIA OR ITS OFFICERS OR AGENTS SHALL NOT BE RESPONSIBLE FOR THE ACCURACY OR COMPLETENESS OF SCANNED COPIES OF THIS PLAN SHEET.

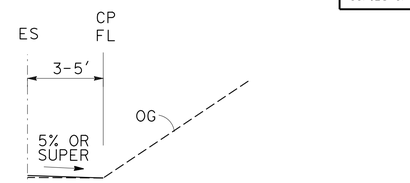

"G1" 337+51.00 TO "G1" 338+80

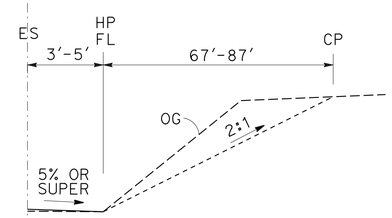

"G1" 337+21.83 TO "G1" 337+50

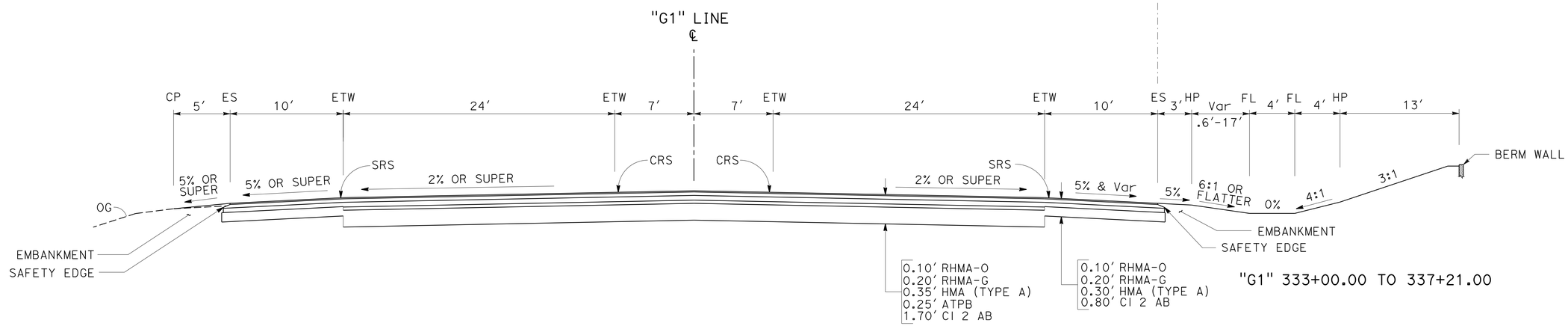

"G1" 333+00.00 TO 337+21.00

"G1" 332+75 TO 337+80

ROUTE 101

TYPICAL CROSS SECTIONS

NO SCALE

X-2

STATE OF CALIFORNIA - DEPARTMENT OF TRANSPORTATION
Caltrans
03-DESIGN

FUNCTIONAL SUPERVISOR: ALI KIANI
CALCULATED-DESIGNED BY: NASIM HASAN
CHECKED BY: DAVID HOPPER
REVISED BY
DATE REVISED

LAST REVISION 00-00-00
DATE PLOTTED => 18-APR-2016
TIME PLOTTED => 09:19

Dist	COUNTY	ROUTE	POST MILES TOTAL PROJECT	SHEET No.	TOTAL SHEETS
01	Men	101	3.8, 5.3	4	99

REGISTERED CIVIL ENGINEER 3-28-16 DATE

3-28-16
PLANS APPROVAL DATE

REGISTERED PROFESSIONAL ENGINEER NASIM HASAN No. 74083 Exp. 6-30-17 CIVIL STATE OF CALIFORNIA

THE STATE OF CALIFORNIA OR ITS OFFICERS OR AGENTS SHALL NOT BE RESPONSIBLE FOR THE ACCURACY OR COMPLETENESS OF SCANNED COPIES OF THIS PLAN SHEET.

NOTE:

FOR ACCURATE RIGHT OF WAY DATA, CONTACT
RIGHT OF WAY ENGINEERING AT THE DISTRICT OFFICE

LEGENDS:

- FULL RECONSTRUCTION
- CUT AREA
- FILL AREA
- TCE
- RETAINING WALL
- FENCE
- Temp FENCE (TYPE ESA)
- LAYER OF TOP SOIL

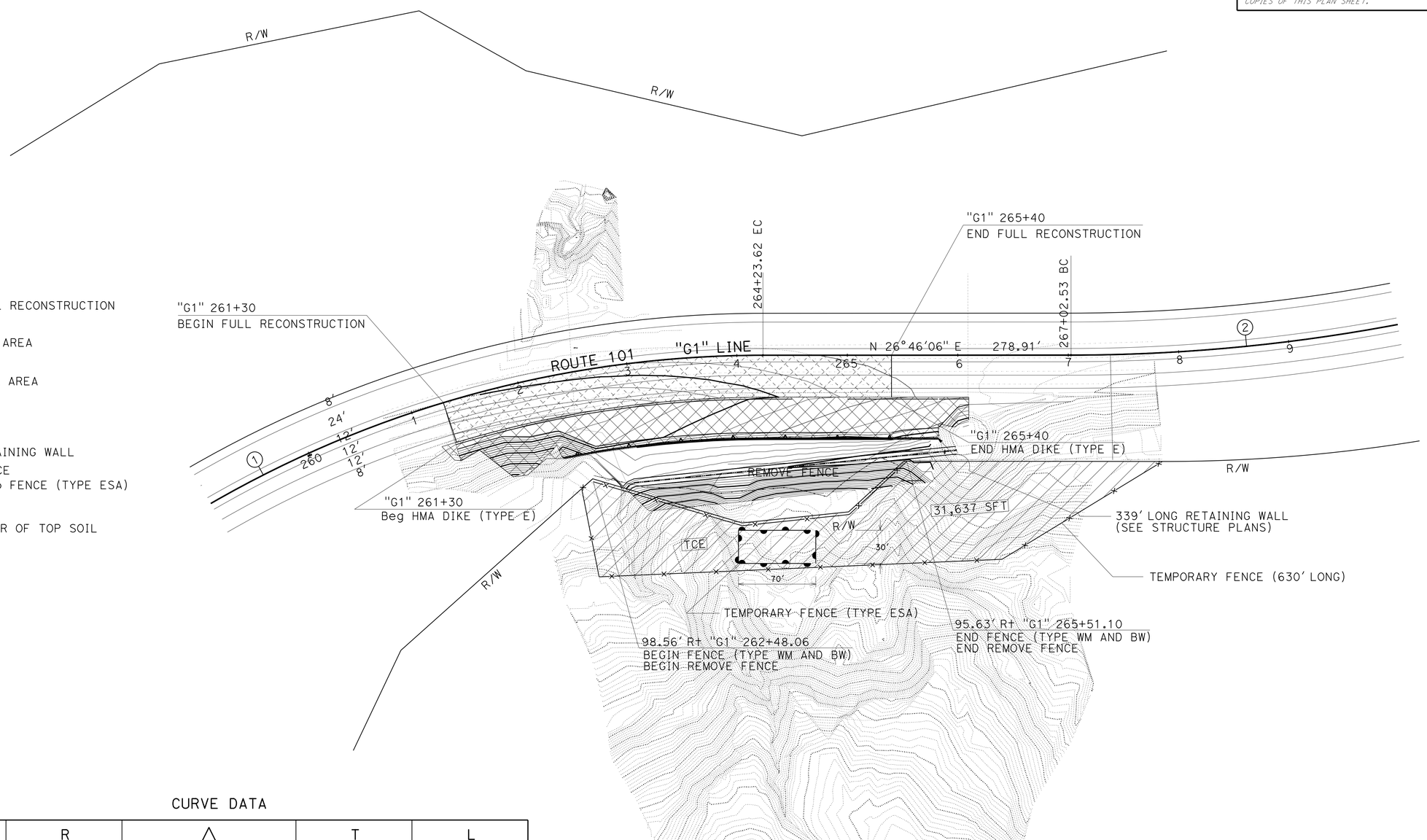

CURVE DATA

No. ⊕	R	△	T	L
1	1000'	73°54'07"	752.21'	1289.83'
2	1600'	36°56'56"	534.56'	1031.81'

LOCATION 1

LAYOUT
SCALE: 1" = 50"

L-1

STATE OF CALIFORNIA - DEPARTMENT OF TRANSPORTATION
Caltrans
03-DESIGN

FUNCTIONAL SUPERVISOR: ALI KIANI
CALCULATED-DESIGNED BY: NASIM HASAN
CHECKED BY: DAVID HOPPER
REVISED BY
DATE REVISED

LAST REVISION 00-00-00
DATE PLOTTED => 18-APR-2016
TIME PLOTTED => 09:19

Dist	COUNTY	ROUTE	POST MILES TOTAL PROJECT	SHEET No.	TOTAL SHEETS
01	Men	101	3.8, 5.3	5	99

REGISTERED CIVIL ENGINEER 3-28-16 DATE

3-28-16
PLANS APPROVAL DATE

REGISTERED PROFESSIONAL ENGINEER NASIM HASAN No. 74083 Exp. 6-30-17 CIVIL STATE OF CALIFORNIA

THE STATE OF CALIFORNIA OR ITS OFFICERS OR AGENTS SHALL NOT BE RESPONSIBLE FOR THE ACCURACY OR COMPLETENESS OF SCANNED COPIES OF THIS PLAN SHEET.

NOTE:

FOR ACCURATE RIGHT OF WAY DATA, CONTACT
RIGHT OF WAY ENGINEERING AT THE DISTRICT OFFICE

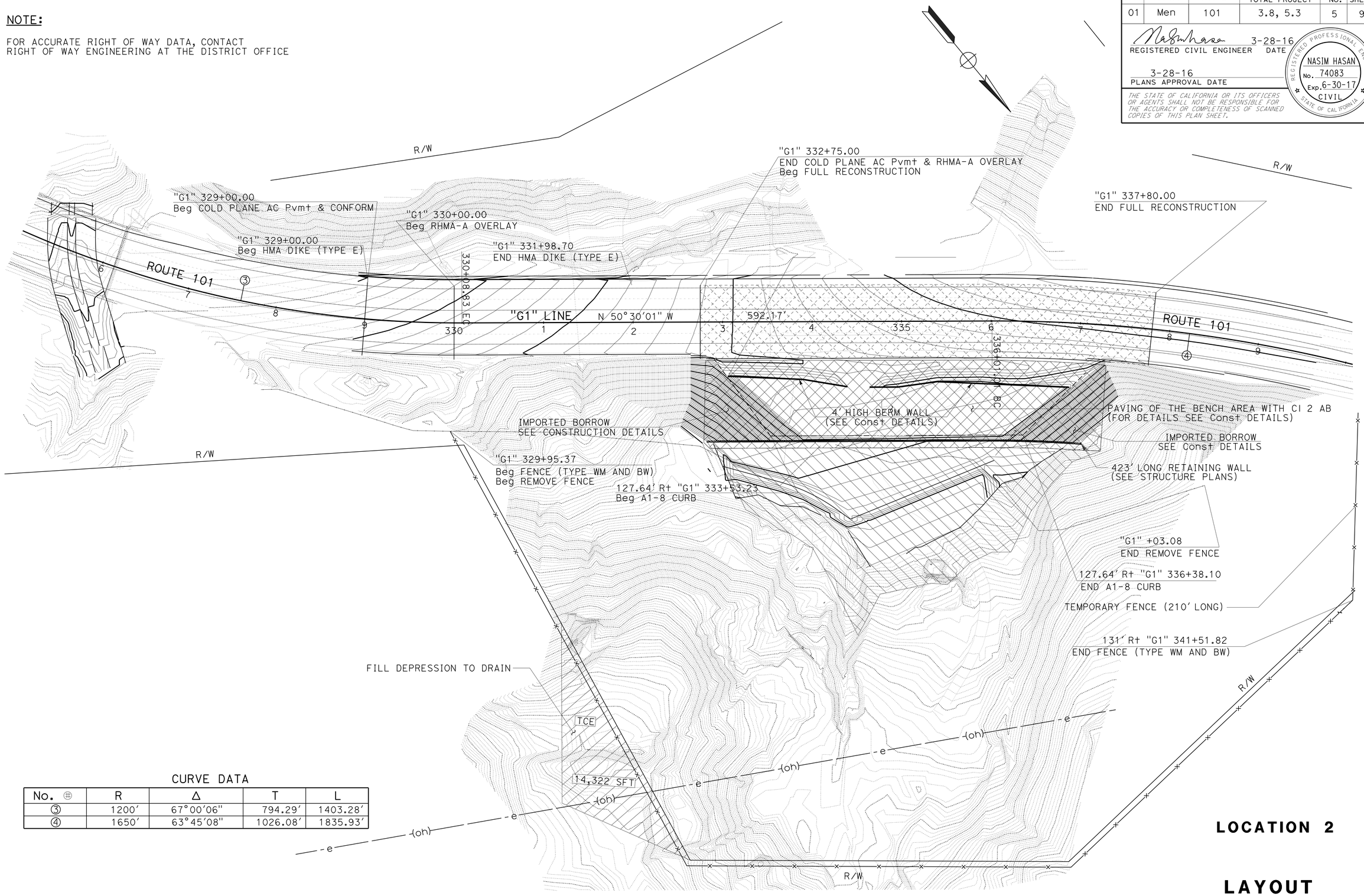

CURVE DATA

No. ⊕	R	Δ	T	L
③	1200'	67°00'06"	794.29'	1403.28'
④	1650'	63°45'08"	1026.08'	1835.93'

LOCATION 2

LAYOUT
SCALE: 1" = 50"

L-2

STATE OF CALIFORNIA - DEPARTMENT OF TRANSPORTATION
Caltrans
03-DESIGN

FUNCTIONAL SUPERVISOR: ALI KIANI
CALCULATED-DESIGNED BY: NASIM HASAN
CHECKED BY: DAVID HOPPER
REVISED BY
DATE REVISED

LAST REVISION 00-00-00
DATE PLOTTED => 18-APR-2016
TIME PLOTTED => 09:19

Dist	COUNTY	ROUTE	POST MILES TOTAL PROJECT	SHEET No.	TOTAL SHEETS
01	Men	101	3.8, 5.3	6	99

REGISTERED CIVIL ENGINEER 3-28-16 DATE

3-28-16
PLANS APPROVAL DATE

REGISTERED PROFESSIONAL ENGINEER
NASIM HASAN
No. 74083
Exp. 6/30/17
CIVIL
STATE OF CALIFORNIA

THE STATE OF CALIFORNIA OR ITS OFFICERS OR AGENTS SHALL NOT BE RESPONSIBLE FOR THE ACCURACY OR COMPLETENESS OF SCANNED COPIES OF THIS PLAN SHEET.

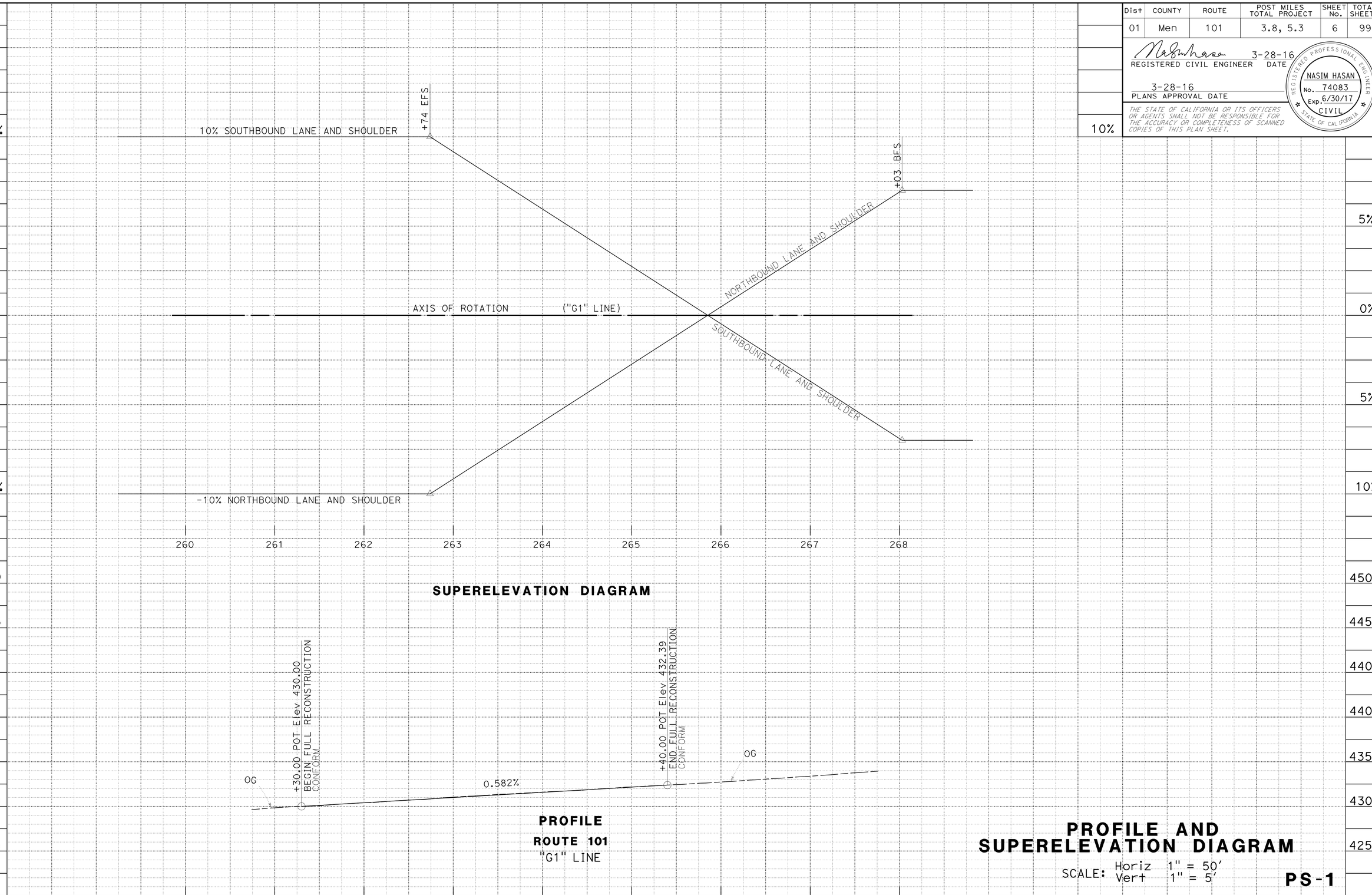

PROFILE AND SUPERELEVATION DIAGRAM

SCALE: Horiz 1" = 50'
Vert 1" = 5'

PS-1

STATION		260	261	262	263	264	265	266	267	268	TOTAL
CY	Exc		808	1094	1276	602					3,780
	Emb		19								19

REVISED BY | DATE REVISED
NASIM HASAN | DAVID HOPPER
CALCULATED-DESIGNED BY | CHECKED BY
FUNCTIONAL SUPERVISOR: ALI KIANI

STATE OF CALIFORNIA - DEPARTMENT OF TRANSPORTATION
Caltrans
03-DESIGN

LAST REVISION 00-00-00 | DATE PLOTTED => 18-APR-2016 | TIME PLOTTED => 09:19

Dist	COUNTY	ROUTE	POST MILES TOTAL PROJECT	SHEET No.	TOTAL SHEETS
01	Men	101	3.8, 5.3	7	99

REGISTERED CIVIL ENGINEER 3-28-16 DATE

3-28-16
PLANS APPROVAL DATE

REGISTERED PROFESSIONAL ENGINEER
NASIM HASAN
No. 74083
Exp. 6/30/17
CIVIL
STATE OF CALIFORNIA

THE STATE OF CALIFORNIA OR ITS OFFICERS OR AGENTS SHALL NOT BE RESPONSIBLE FOR THE ACCURACY OR COMPLETENESS OF SCANNED COPIES OF THIS PLAN SHEET.

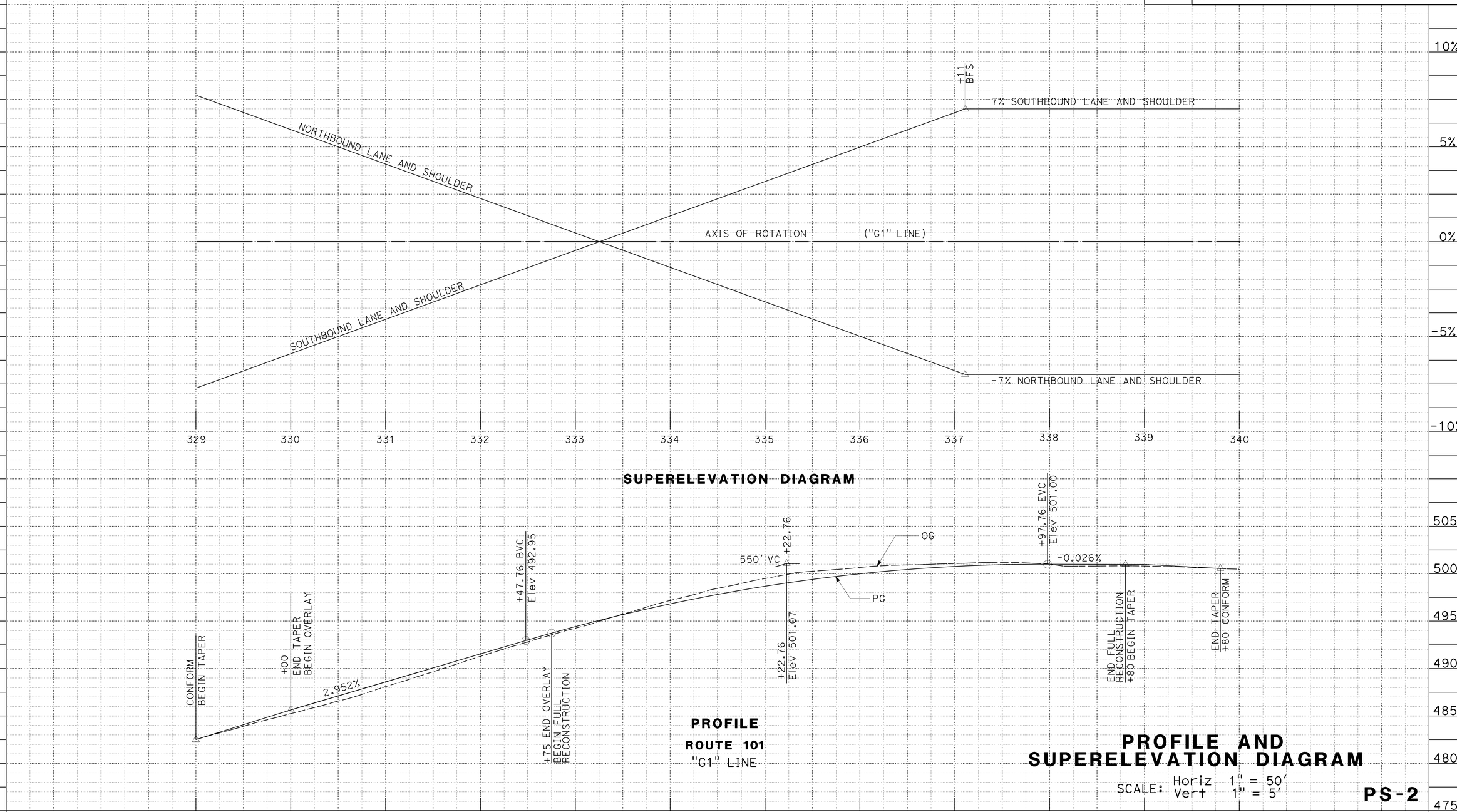

PROFILE AND SUPERELEVATION DIAGRAM

SCALE: Horiz 1" = 50'
Vert 1" = 5'

PS-2

STATION		329	330	331	332	333	334	335	336	337	338	339	340	TOTAL
CY	Exc	213				5,723	6,733	4,574	3,068	647				20,958
	Emb	29				981	2,643	1,528	1,158	26				6,365

REVISED BY | DATE REVISED
NASIM HASAN | DAVID HOPPER
CALCULATED-DESIGNED BY | CHECKED BY
FUNCTIONAL SUPERVISOR
ALI KIANI

STATE OF CALIFORNIA - DEPARTMENT OF TRANSPORTATION
Caltrans
03-DESIGN

LAST REVISION 00-00-00
DATE PLOTTED => 18-APR-2016
TIME PLOTTED => 09:19

Dist	COUNTY	ROUTE	POST MILES TOTAL PROJECT	SHEET No.	TOTAL SHEETS
01	Men	101	3.8, 5.3	8	99

REGISTERED CIVIL ENGINEER 3-28-16 DATE

3-28-16
PLANS APPROVAL DATE

REGISTERED PROFESSIONAL ENGINEER NASIM HASAN No. 74083 Exp. 6-30-17 CIVIL STATE OF CALIFORNIA

THE STATE OF CALIFORNIA OR ITS OFFICERS OR AGENTS SHALL NOT BE RESPONSIBLE FOR THE ACCURACY OR COMPLETENESS OF SCANNED COPIES OF THIS PLAN SHEET.

NOTE:

1. THE SLOT WIDTH IS 0.05 INCH FOR THE SLOTTED PIPE

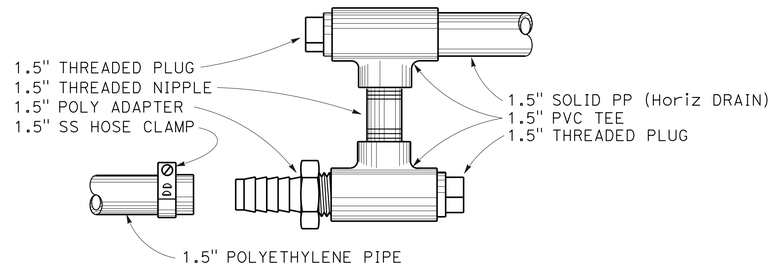

PLAN VIEW

HORIZONTAL DRAIN CONNECTOR UNIT

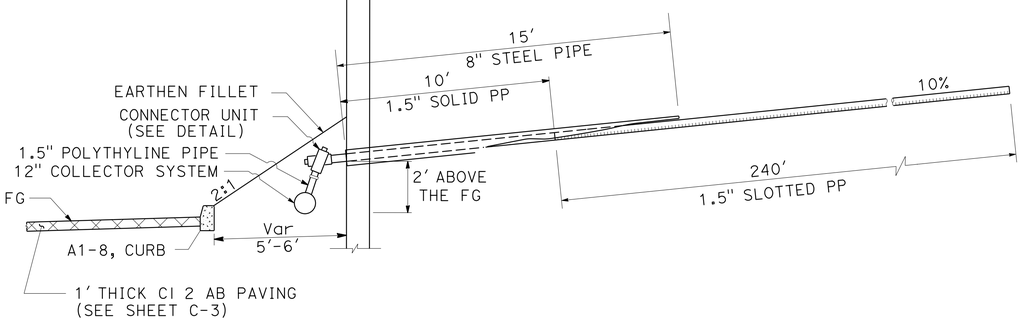

SECTION A-A

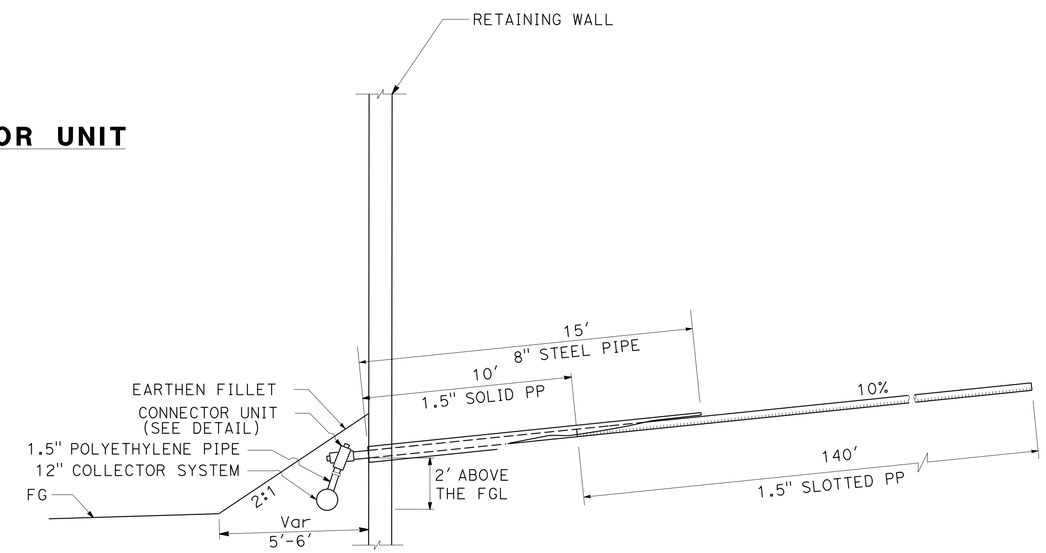

SECTION B-B

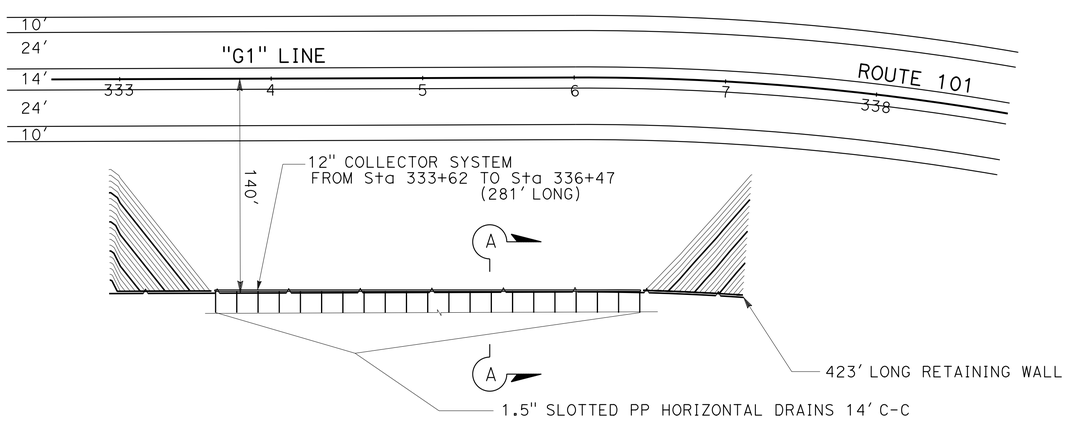

PLAN

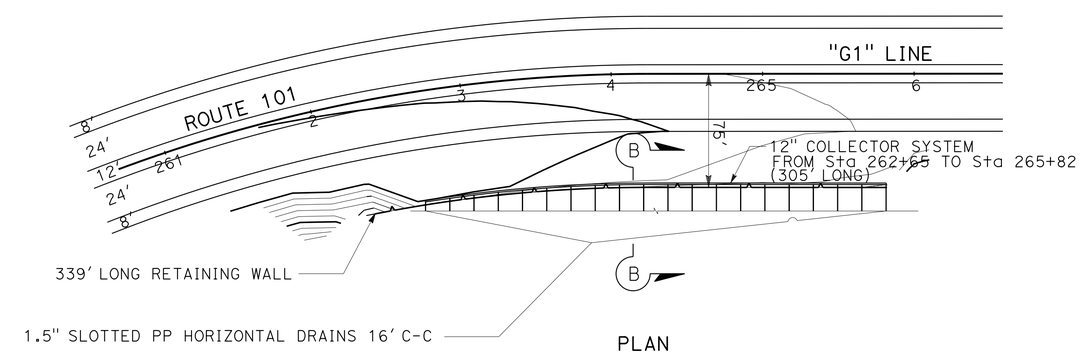

PLAN

CONSTRUCTION DETAILS

NO SCALE

C-1

REVISED BY | DATE REVISED
NASIM HASAN | DON WEHRLY
CALCULATED-DESIGNED BY | CHECKED BY
FUNCTIONAL SUPERVISOR: ALI KIANI

STATE OF CALIFORNIA - DEPARTMENT OF TRANSPORTATION
Caltrans 03-DESIGN

LAST REVISION 00-00-00 | DATE PLOTTED => 18-APR-2016 | TIME PLOTTED => 09:19

Dist	COUNTY	ROUTE	POST MILES TOTAL PROJECT	SHEET No.	TOTAL SHEETS
01	Men	101	3.8, 5.3	9	99

REGISTERED CIVIL ENGINEER 3-28-16 DATE

3-28-16
PLANS APPROVAL DATE

REGISTERED PROFESSIONAL ENGINEER NASIM HASAN No. 74083 Exp. 6-30-17 CIVIL STATE OF CALIFORNIA

THE STATE OF CALIFORNIA OR ITS OFFICERS OR AGENTS SHALL NOT BE RESPONSIBLE FOR THE ACCURACY OR COMPLETENESS OF SCANNED COPIES OF THIS PLAN SHEET.

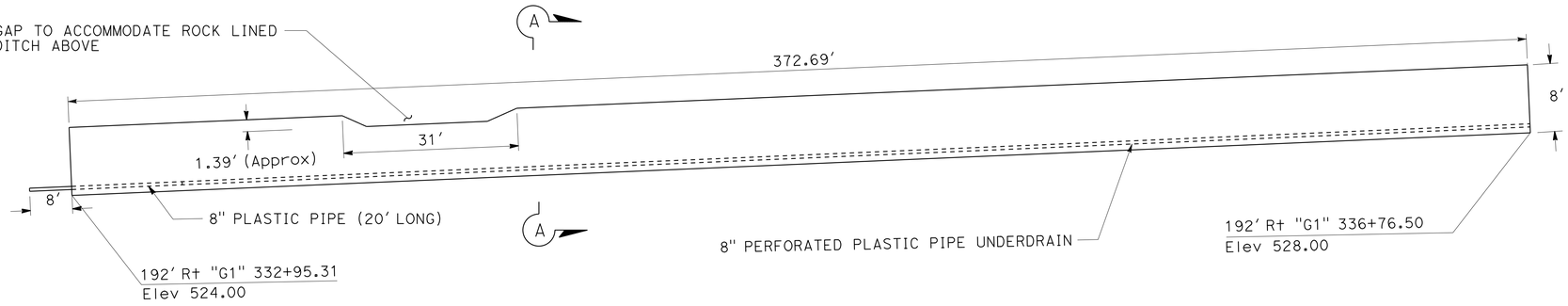

UD-3 PROFILE VIEW

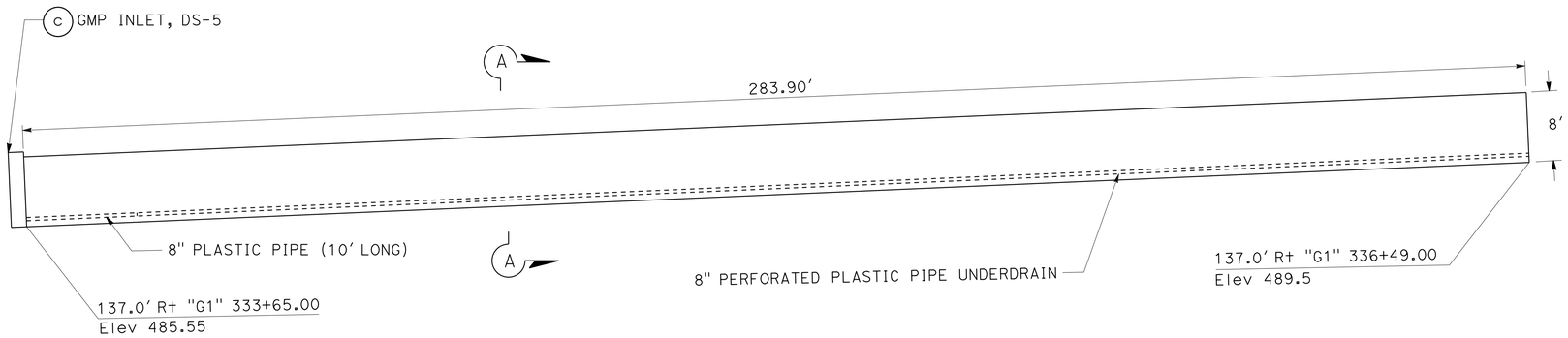

UD-2 PROFILE VIEW

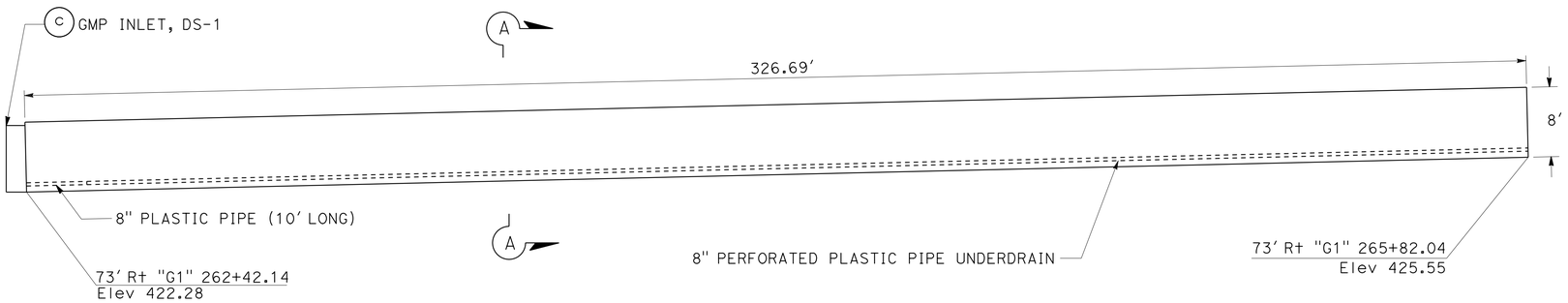

UD-1 PROFILE VIEW

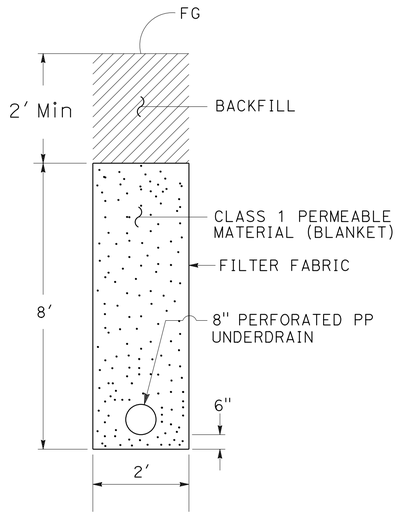

SECTION A-A

UNDERDRAIN DETAILS

CONSTRUCTION DETAILS

NO SCALE

C-2

REVISED BY | DATE REVISED
NASIM HASAN
CALCULATED-DESIGNED BY | CHECKED BY
FUNCTIONAL SUPERVISOR
ALI KIANI

STATE OF CALIFORNIA - DEPARTMENT OF TRANSPORTATION
03-DESIGN
Caltrans

LAST REVISION 00-00-00 | DATE PLOTTED => 18-APR-2016 | TIME PLOTTED => 09:19

Dist	COUNTY	ROUTE	POST MILES TOTAL PROJECT	SHEET No.	TOTAL SHEETS
01	Men	101	3.8, 5.3	10	99

REGISTERED CIVIL ENGINEER 3-28-16 DATE

3-28-16
PLANS APPROVAL DATE

REGISTERED PROFESSIONAL ENGINEER NASIM HASAN No. 74083 Exp. 6-30-17 CIVIL STATE OF CALIFORNIA

THE STATE OF CALIFORNIA OR ITS OFFICERS OR AGENTS SHALL NOT BE RESPONSIBLE FOR THE ACCURACY OR COMPLETENESS OF SCANNED COPIES OF THIS PLAN SHEET.

LEGEND:

DIRECTION OF TRAVEL

4" THICK HMA (TYPE A) OVER 9" THICK CLASS 2 AB

1' THICK CLASS 2 AB

THERMOPLASTIC TRAFFIC STRIPE

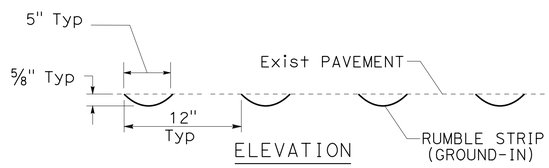

ELEVATION

SECTION C-C

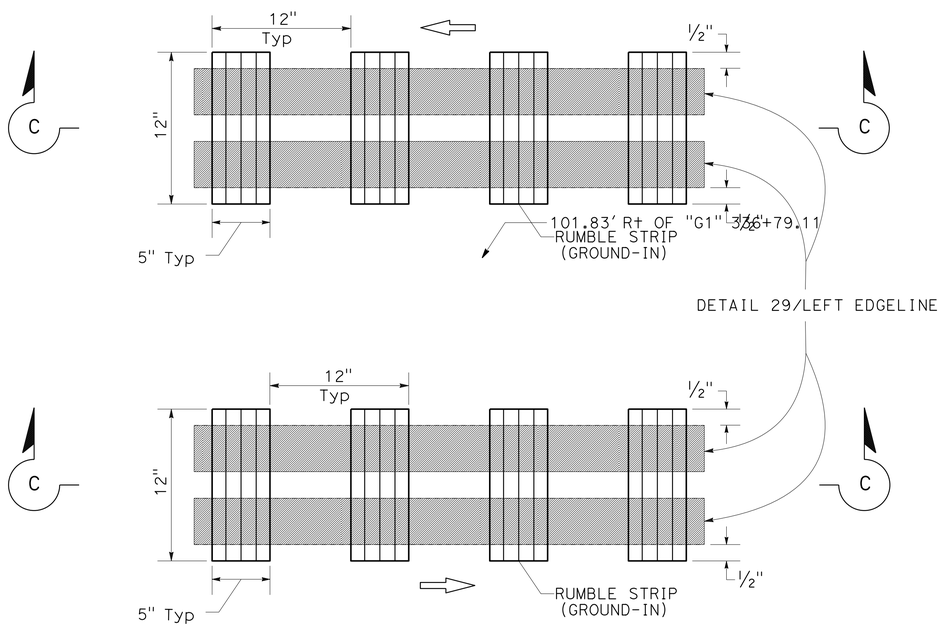

PLAN

RUMBLE STRIP DETAIL 29
12" WIDE

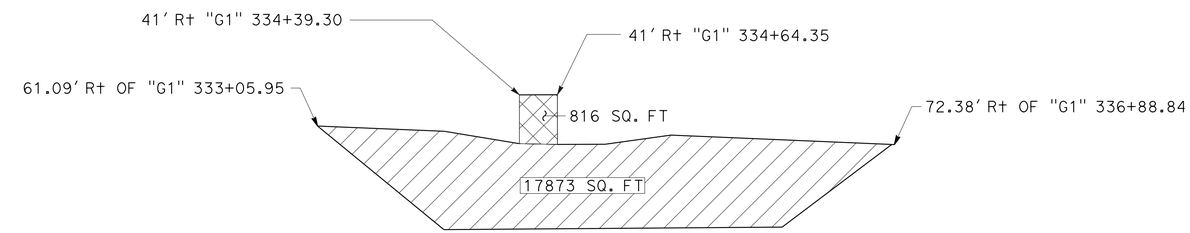

BENCH AREA PAVING

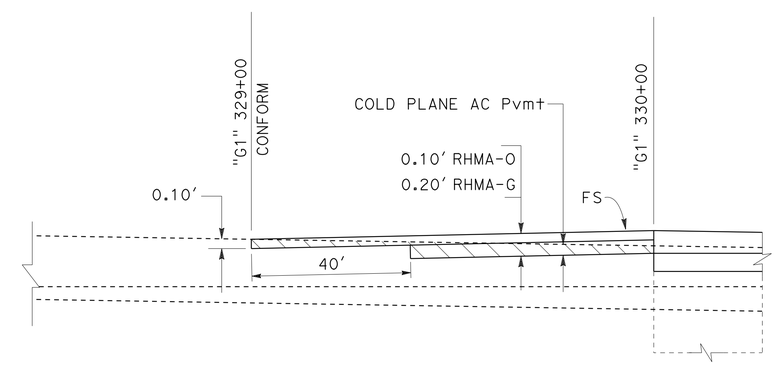

COLD PLANE CONFORM DETAIL
"G1" 329+00 TO 330+00

CONSTRUCTION DETAILS

NO SCALE

C-3

REVISED BY	DATE REVISED

NASIM HASAN — DAVID HOPPER — CALCULATED-DESIGNED BY — CHECKED BY

FUNCTIONAL SUPERVISOR: ALI KIANI

STATE OF CALIFORNIA - DEPARTMENT OF TRANSPORTATION — 03-DESIGN — Caltrans

LAST REVISION 00-00-00 — DATE PLOTTED => 18-APR-2016 — TIME PLOTTED => 09:19

Dist	COUNTY	ROUTE	POST MILES TOTAL PROJECT	SHEET No.	TOTAL SHEETS
01	Men	101	3.8, 5.3	11	99

REGISTERED CIVIL ENGINEER 3-28-16 DATE

3-28-16
PLANS APPROVAL DATE

REGISTERED PROFESSIONAL ENGINEER NASIM HASAN No. 74083 Exp. 6-30-17 CIVIL STATE OF CALIFORNIA

THE STATE OF CALIFORNIA OR ITS OFFICERS OR AGENTS SHALL NOT BE RESPONSIBLE FOR THE ACCURACY OR COMPLETENESS OF SCANNED COPIES OF THIS PLAN SHEET.

NOTES:

1. DO NOT INSTALL SHOULDER RUMBLE STRIP ON SUSTAINED DOWNGRADES 6% OR GREATER UNLESS PAVED SHOULDER WIDTH IS 6′ OR GREATER.
2. DO NOT INSTALL SHOULDER RUMBLE STRIP ADJACENT TO GUARDRAIL UNLESS PAVED SHOULDER WIDTH FROM ETW TO FACE OF RAIL IS 5′ OR GREATER
3. WHERE PAVED SHOULDER WIDTH IS 8′ OR GREATER, INSTALL 12" GROUND IN SHOULDER RUMBLE STRIP OFFSET 1′ FROM ETW PER STANDARD PLAN A40B
4. WHERE PAVED SHOULDER WIDTH IS 4′0" TO 6′, SHOULD INSTALL 6" WIDE GROUND-IN EDGELINE RUMBLE STRIP.
5. WHERE PAVED SHOULDER WIDTH IS 6′ TO LESS THAN 8′, INSTALL 12" WIDE GROUND-IN EDGELINE RUMBLE STRIP.

LEGEND:

DIRECTION OF TRAVEL ⇨

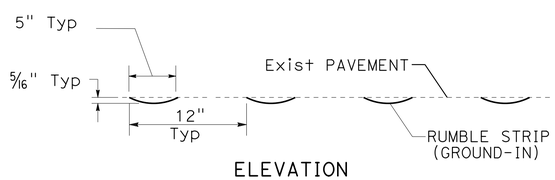

ELEVATION

SECTION A-A

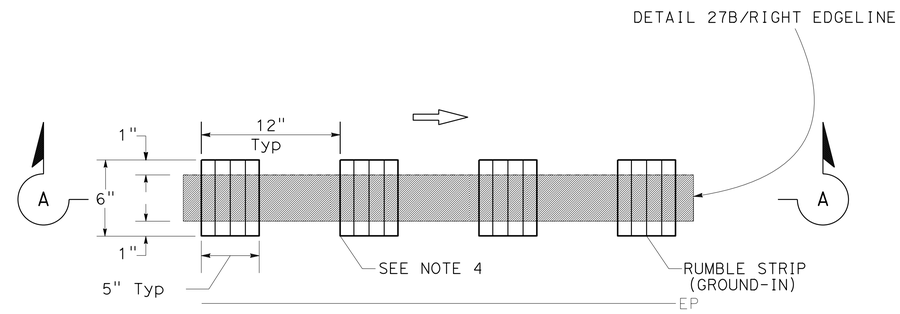

PLAN

RUMBLE STRIP DETAIL 27B
6" WIDE

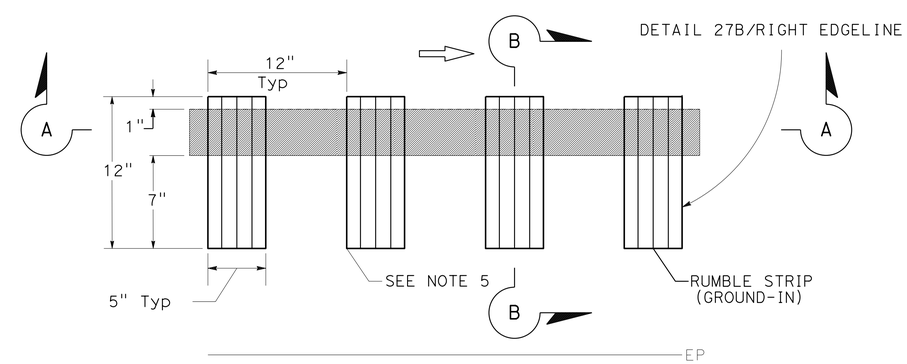

PLAN

RUMBLE STRIP DETAIL 27B

CONSTRUCTION DETAILS

NO SCALE

C-4

STATE OF CALIFORNIA - DEPARTMENT OF TRANSPORTATION
Caltrans® 03-DESIGN

FUNCTIONAL SUPERVISOR: ALI KIANI
CALCULATED-DESIGNED BY: NASIM HASAN
CHECKED BY: DAVID HOPPER
REVISED BY
DATE REVISED

LAST REVISION 00-00-00
DATE PLOTTED => 18-APR-2016
TIME PLOTTED => 09:19

Dist	COUNTY	ROUTE	POST MILES TOTAL PROJECT	SHEET No.	TOTAL SHEETS
01	Men	101	3.8, 5.3	12	99

REGISTERED CIVIL ENGINEER 3-28-16 DATE

3-28-16
PLANS APPROVAL DATE

REGISTERED PROFESSIONAL ENGINEER
NASIM HASAN
No. 74083
Exp. 6-30-17
CIVIL
STATE OF CALIFORNIA

THE STATE OF CALIFORNIA OR ITS OFFICERS OR AGENTS SHALL NOT BE RESPONSIBLE FOR THE ACCURACY OR COMPLETENESS OF SCANNED COPIES OF THIS PLAN SHEET.

NOTES:

1. SECTION A-A IS ON A HORIZONTAL PLANE AT THE BASE OF SLOPES
2. SECTION B-B IS ON A VERTICAL PLANE AT MID DISTANCE BETWEEN BERM AND RETAINING WALL
3. FOR BERM WALL DETAILS SEE Std plan B15-1 & B15-2.

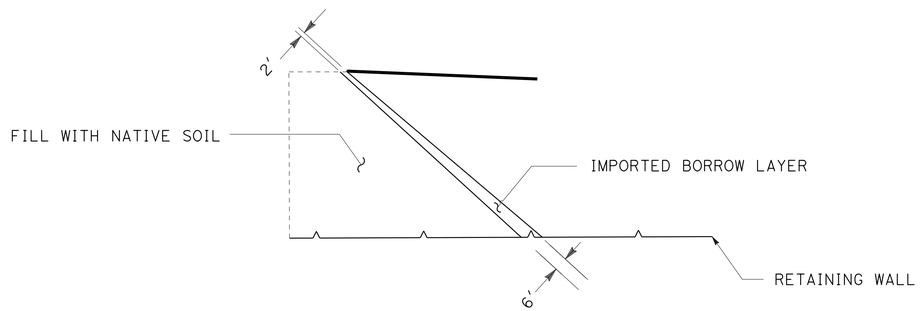

SECTION A-A

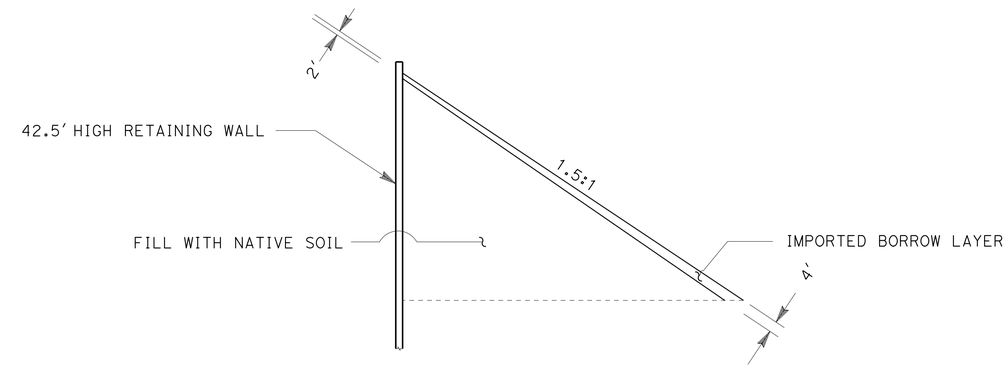

SECTION B-B

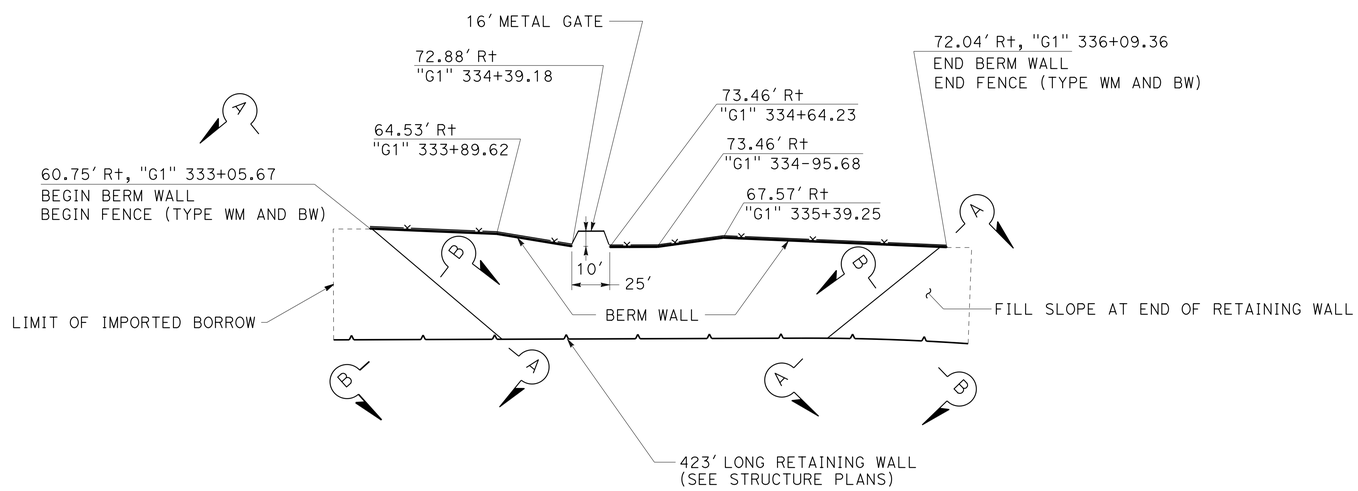

PLAN

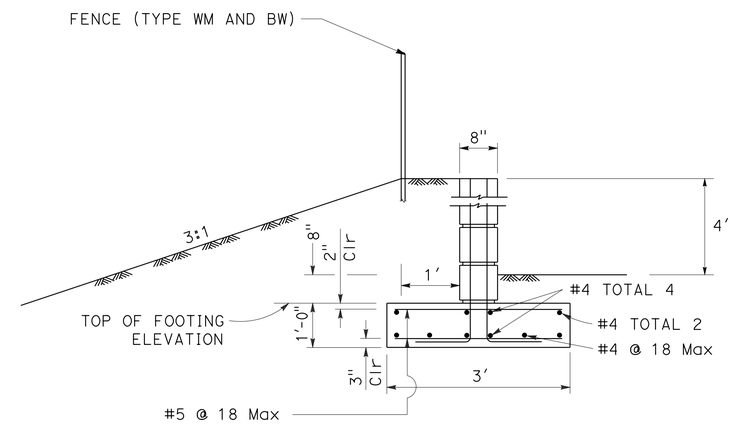

CASE 1

BERM WALL DETAILS

DETAILS SHOWING BERM WALL & IMPORTED BORROW ON SLOPES AT RETAINING WALL ENDS

"G1" 332+92.50 TO 337+26.12

CONSTRUCTION DETAILS

NO SCALE

C-5

STATE OF CALIFORNIA - DEPARTMENT OF TRANSPORTATION
Caltrans®
03-DESIGN

FUNCTIONAL SUPERVISOR: ALI KIANI
CALCULATED-DESIGNED BY: NASIM HASAN
CHECKED BY: DAVID HOPPER
REVISED BY
DATE REVISED

LAST REVISION 00-00-00
DATE PLOTTED => 18-APR-2016
TIME PLOTTED => 09:19

Dist	COUNTY	ROUTE	POST MILES TOTAL PROJECT	SHEET No.	TOTAL SHEETS
01	Men	101	3.8, 5.3	13	99

REGISTERED CIVIL ENGINEER 3-28-16 DATE

3-28-16
PLANS APPROVAL DATE

REGISTERED PROFESSIONAL ENGINEER
NASIM HASAN
No. 74083
Exp. 6-30-17
CIVIL
STATE OF CALIFORNIA

THE STATE OF CALIFORNIA OR ITS OFFICERS OR AGENTS SHALL NOT BE RESPONSIBLE FOR THE ACCURACY OR COMPLETENESS OF SCANNED COPIES OF THIS PLAN SHEET.

NOTES:

1. FOR ACCURATE RIGHT OF WAY DATA, CONTACT RIGHT OF ENGINEERING AT THE DISTRICT OFFICE
2. FOR HORIZONTAL DRAINS SEE Const DETAILS
3. FOR UNDERDRAINS DETAILS SEE Const DETAILS

LEGENDS:

- (No.) DRAINAGE SYSTEM NUMBER
- (xx) DRAINAGE ITEM
- BSx BIOFILTRATION-SWALE No.
- LIMITS OF BIOFILTRATION-SWALE

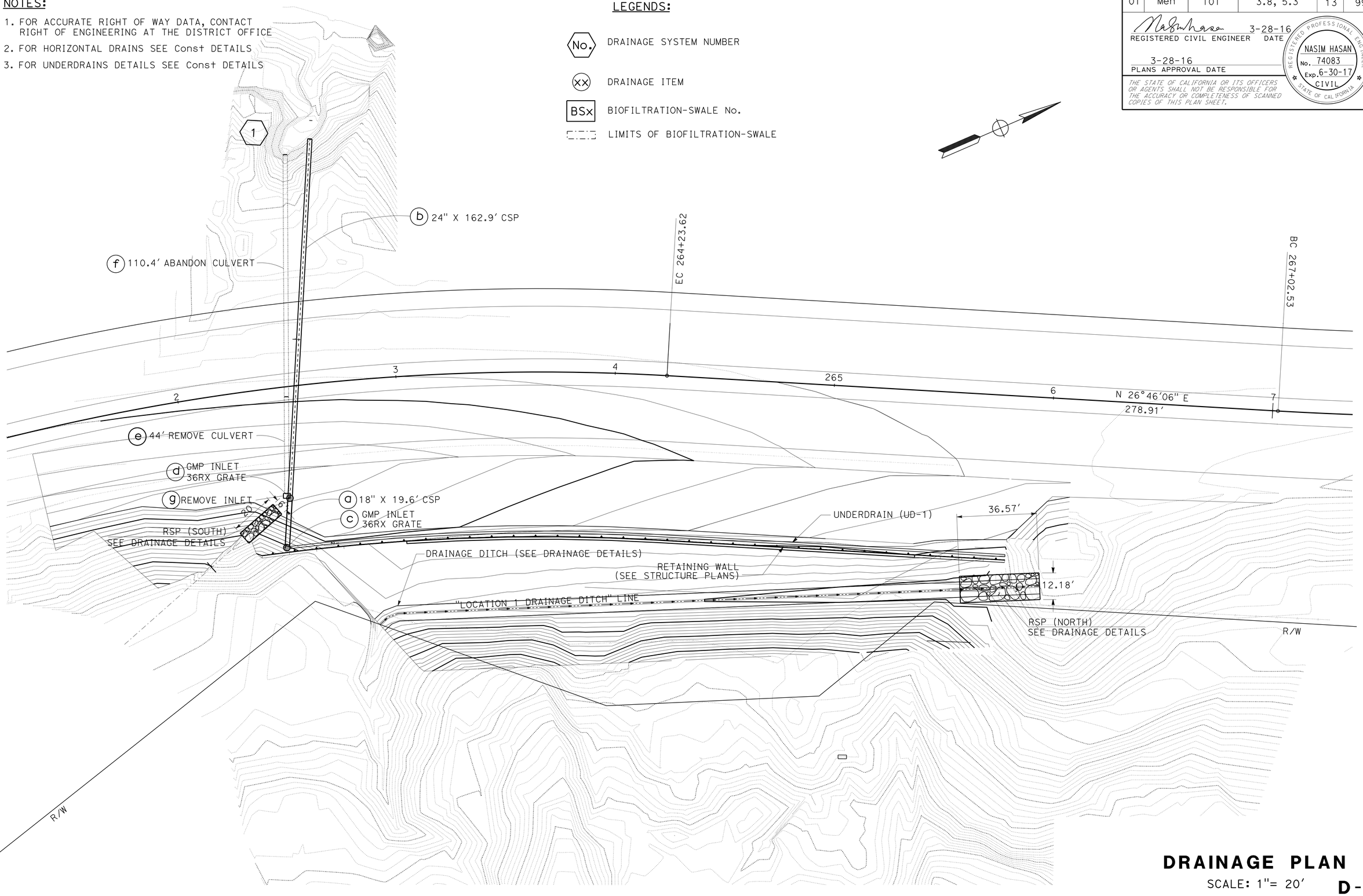

DRAINAGE PLAN

SCALE: 1"= 20'

D-1

STATE OF CALIFORNIA - DEPARTMENT OF TRANSPORTATION
Caltrans
03-DESIGN

FUNCTIONAL SUPERVISOR: ALI KIANI
CALCULATED-DESIGNED BY: NASIM HASAN
CHECKED BY: DAVID HOPPER
REVISED BY
DATE REVISED

LAST REVISION 00-00-00
DATE PLOTTED => 18-APR-2016
TIME PLOTTED => 09:19

Dist	COUNTY	ROUTE	POST MILES TOTAL PROJECT	SHEET No.	TOTAL SHEETS
01	Men	101	3.8, 5.3	14	99

REGISTERED CIVIL ENGINEER 3-28-16 DATE

3-28-16
PLANS APPROVAL DATE

REGISTERED PROFESSIONAL ENGINEER
NASIM HASAN
No. 74083
Exp. 6-30-17
CIVIL
STATE OF CALIFORNIA

THE STATE OF CALIFORNIA OR ITS OFFICERS OR AGENTS SHALL NOT BE RESPONSIBLE FOR THE ACCURACY OR COMPLETENESS OF SCANNED COPIES OF THIS PLAN SHEET.

NOTES:

1. FOR SECTION A-A SEE DRAINAGE PROFILES.

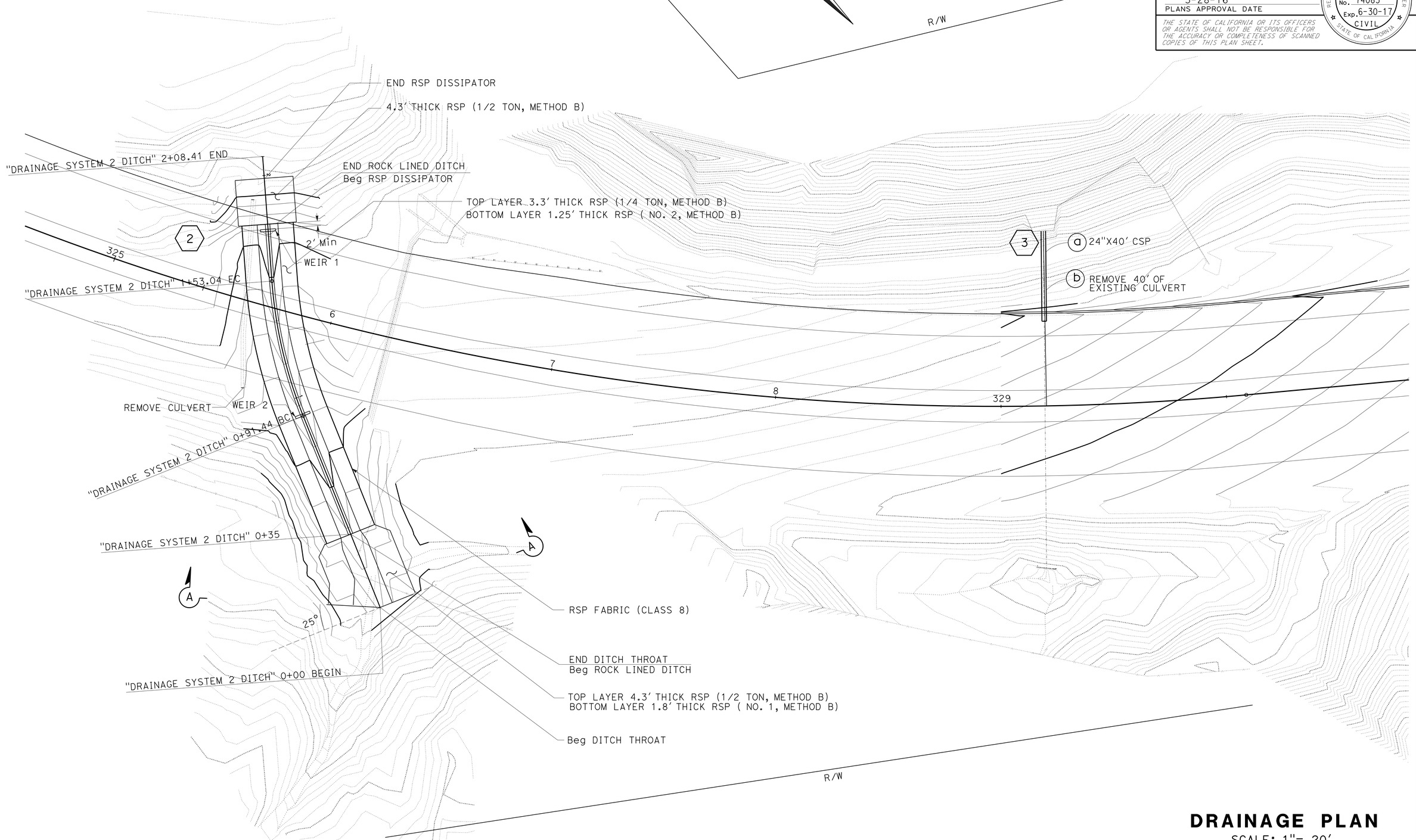

DRAINAGE PLAN

SCALE: 1"= 20'

D-2

STATE OF CALIFORNIA - DEPARTMENT OF TRANSPORTATION
Caltrans
03-DESIGN

FUNCTIONAL SUPERVISOR: ALI KIANI
CALCULATED-DESIGNED BY: NASIM HASAN
CHECKED BY: DAVID HOPPER
REVISED BY
DATE REVISED

LAST REVISION 00-00-00
DATE PLOTTED => 18-APR-2016
TIME PLOTTED => 09:19

Dist	COUNTY	ROUTE	POST MILES TOTAL PROJECT	SHEET No.	TOTAL SHEETS
01	Men	101	3.8, 5.3	15	99

REGISTERED CIVIL ENGINEER 3-28-16 DATE

3-28-16
PLANS APPROVAL DATE

REGISTERED PROFESSIONAL ENGINEER NASIM HASAN No. 74083 Exp. 6-30-17 CIVIL STATE OF CALIFORNIA

THE STATE OF CALIFORNIA OR ITS OFFICERS OR AGENTS SHALL NOT BE RESPONSIBLE FOR THE ACCURACY OR COMPLETENESS OF SCANNED COPIES OF THIS PLAN SHEET.

NOTES:

1. FOR DETAILS OF BIOFILTRATION SWALES SEE SHEET DD-3 & EC-3

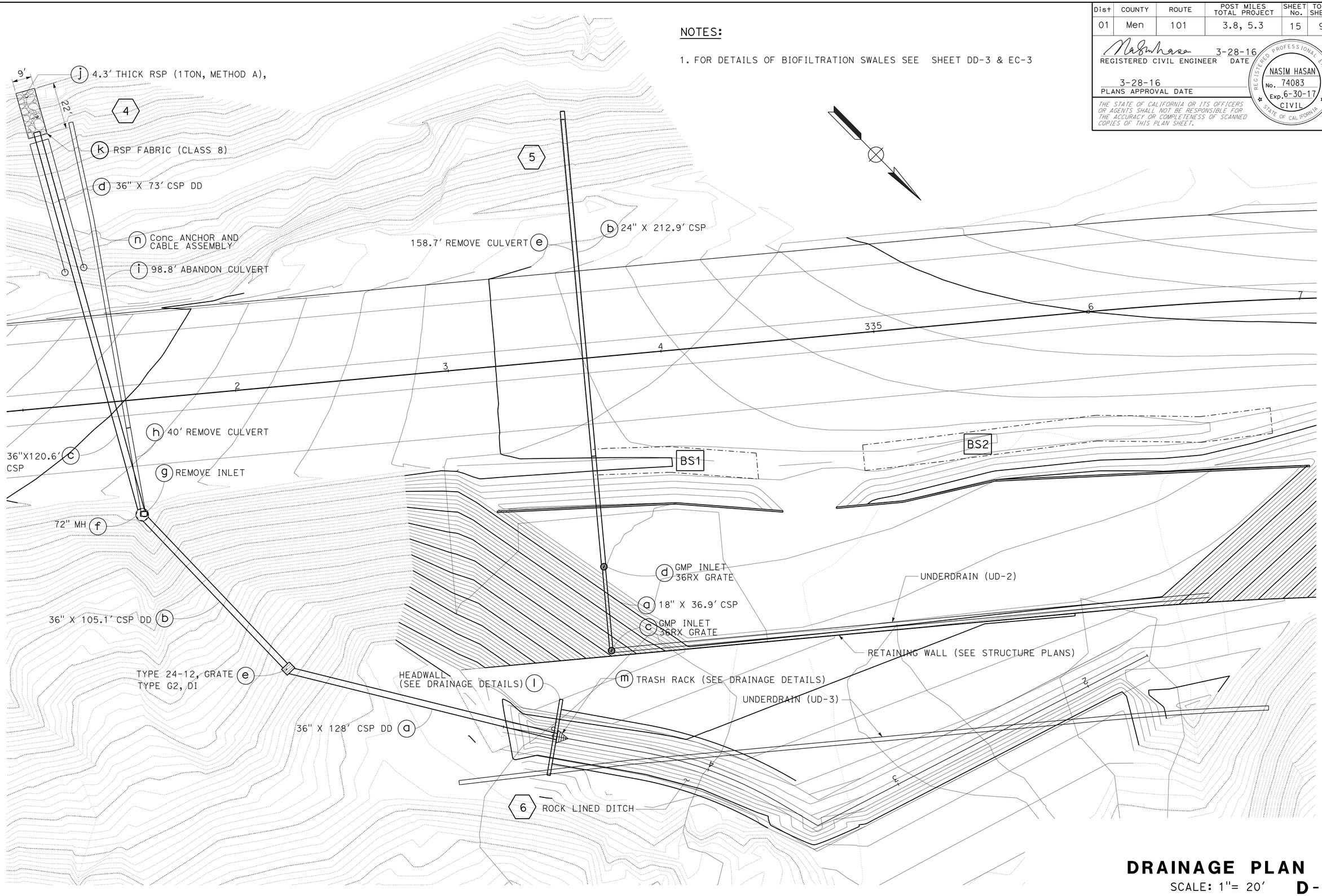

DRAINAGE PLAN

SCALE: 1"= 20' **D-3**

STATE OF CALIFORNIA - DEPARTMENT OF TRANSPORTATION

Caltrans

03-DESIGN

FUNCTIONAL SUPERVISOR: ALI KIANI

CALCULATED-DESIGNED BY: NASIM HASAN

CHECKED BY: DAVID HOPPER

REVISED BY

DATE REVISED

LAST REVISION 00-00-00

DATE PLOTTED => 18-APR-2016

TIME PLOTTED => 09:19

Dist	COUNTY	ROUTE	POST MILES TOTAL PROJECT	SHEET No.	TOTAL SHEETS
01	Men	101	3.8, 5.3	16	99

REGISTERED CIVIL ENGINEER 3-28-16 DATE

3-28-16
PLANS APPROVAL DATE

REGISTERED PROFESSIONAL ENGINEER NASIM HASAN No. 74083 Exp. 6-30-17 CIVIL STATE OF CALIFORNIA

THE STATE OF CALIFORNIA OR ITS OFFICERS OR AGENTS SHALL NOT BE RESPONSIBLE FOR THE ACCURACY OR COMPLETENESS OF SCANNED COPIES OF THIS PLAN SHEET.

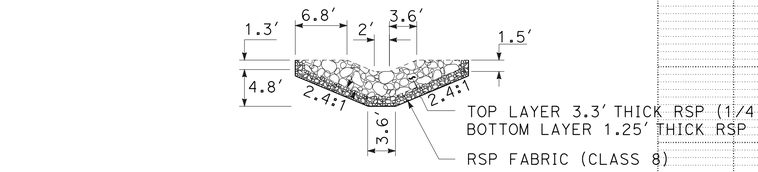

ROCK LINED DITCH

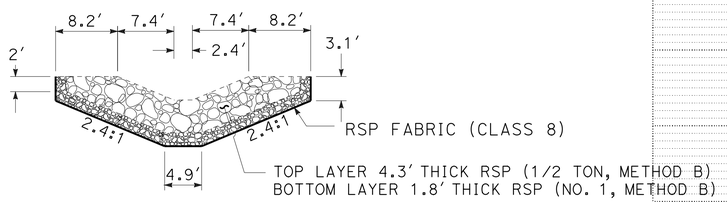

DITCH THROAT

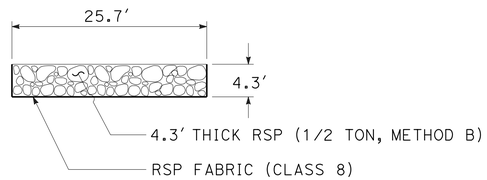

RSP DISSIPATOR

NO SCALE

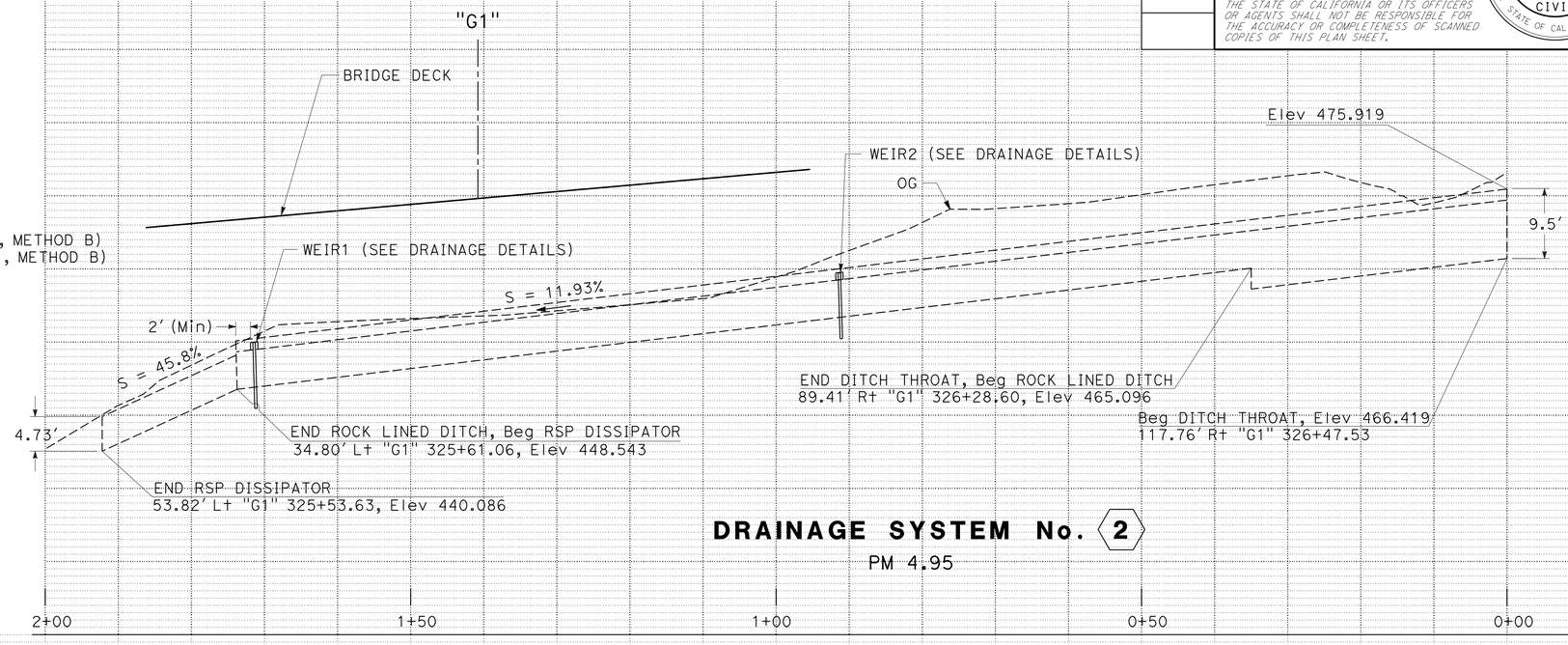

DRAINAGE SYSTEM No. 2

PM 4.95

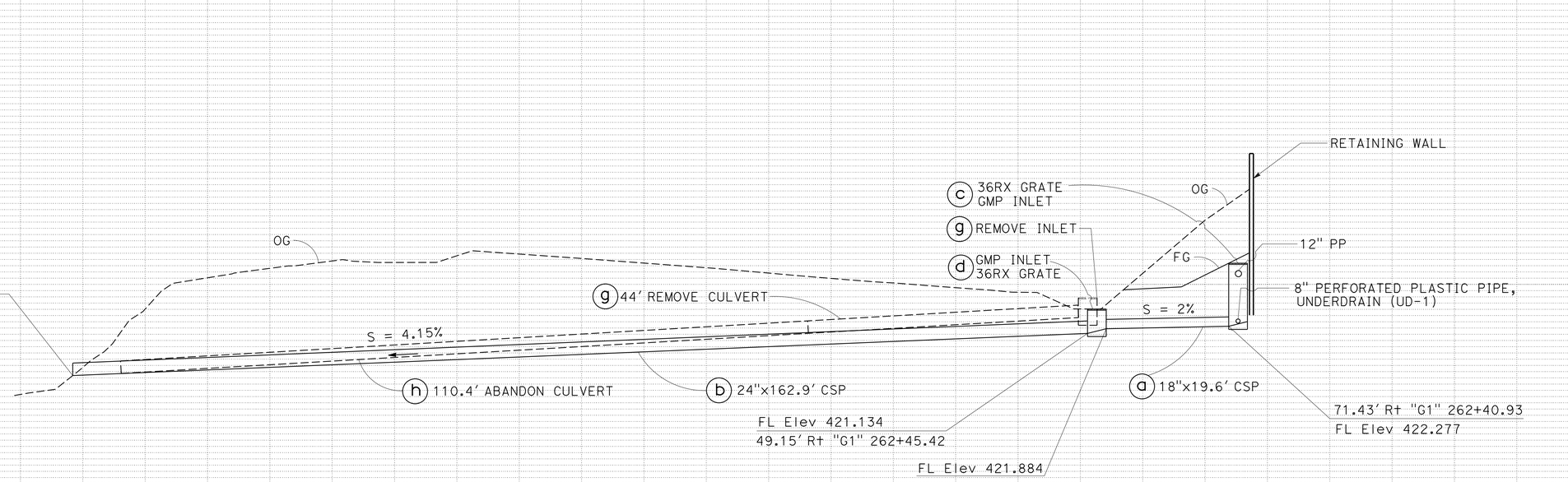

DRAINAGE SYSTEM No. 1

"G1" 262+54.42
SKEW 80°39′39"

DRAINAGE PROFILES

SCALE: 1" = 10′ Horiz.
1" = 10′ Vert.

DP-1

REVISED BY | DATE REVISED
NASIM HASAN | DAVID HOPPER
CALCULATED-DESIGNED BY | CHECKED BY
FUNCTIONAL SUPERVISOR: ALI KIANI

STATE OF CALIFORNIA - DEPARTMENT OF TRANSPORTATION
Caltrans
03-DESIGN

LAST REVISION 09-16-14
DATE PLOTTED => 18-APR-2016
TIME PLOTTED => 09:20

Dist	COUNTY	ROUTE	POST MILES TOTAL PROJECT	SHEET No.	TOTAL SHEETS
01	Men	101	3.8, 5.3	17	99

REGISTERED CIVIL ENGINEER 3-28-16 DATE

3-28-16
PLANS APPROVAL DATE

REGISTERED PROFESSIONAL ENGINEER NASIM HASAN No. 74083 Exp. 6-30-17 CIVIL STATE OF CALIFORNIA

THE STATE OF CALIFORNIA OR ITS OFFICERS OR AGENTS SHALL NOT BE RESPONSIBLE FOR THE ACCURACY OR COMPLETENESS OF SCANNED COPIES OF THIS PLAN SHEET.

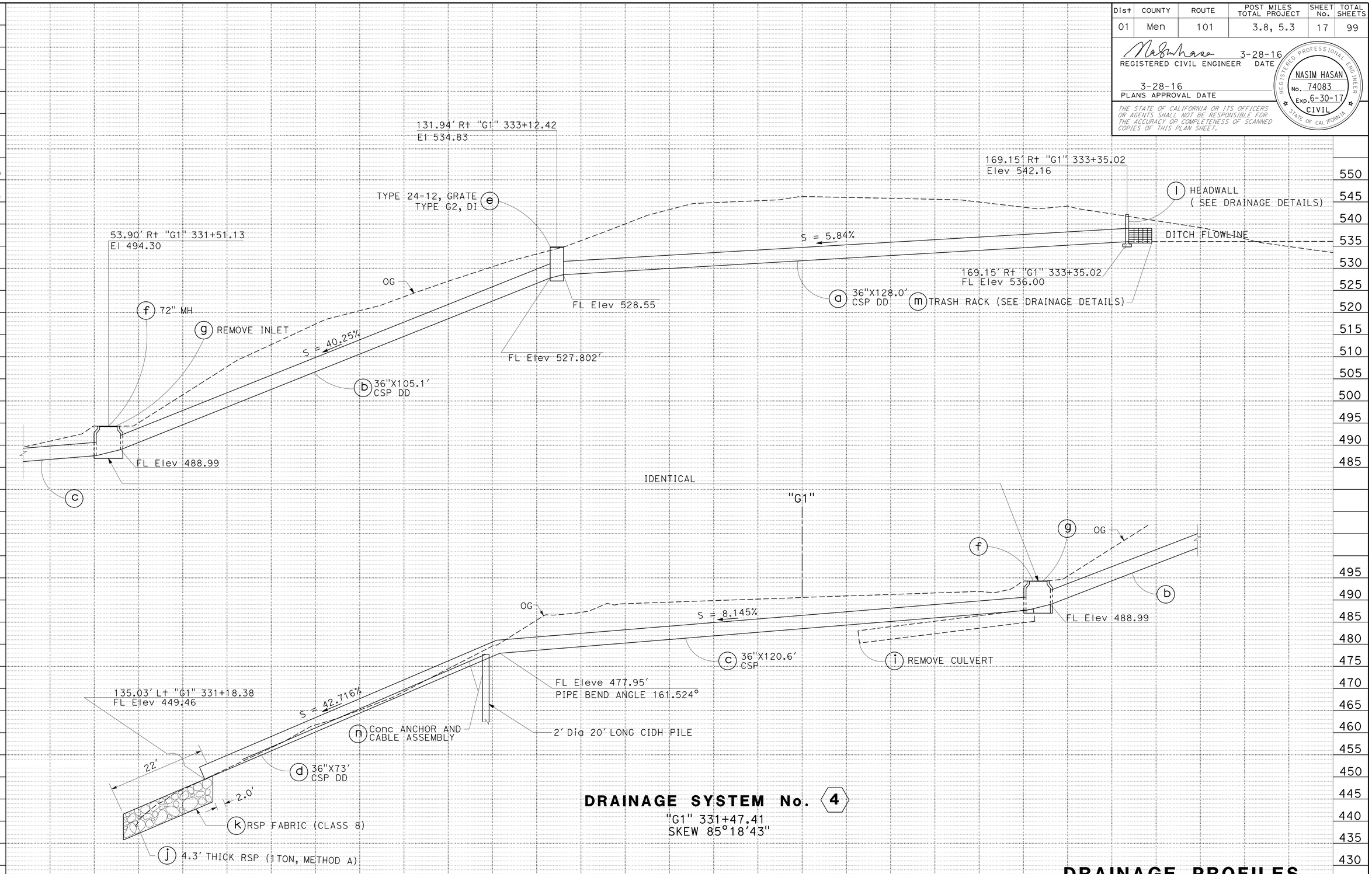

DRAINAGE SYSTEM No. 4

"G1" 331+47.41
SKEW 85°18'43"

DRAINAGE PROFILES

SCALE: 1" = 10' Horiz.
1" = 10' Vert.

DP-2

REVISED BY	DATE REVISED
NASIM HASAN	DAVID HOPPER
CALCULATED-DESIGNED BY	CHECKED BY
FUNCTIONAL SUPERVISOR	ALI KIANI

STATE OF CALIFORNIA - DEPARTMENT OF TRANSPORTATION
03-DESIGN
Caltrans

LAST REVISION 00-00-00 | DATE PLOTTED => 18-APR-2016 | TIME PLOTTED => 09:20

Dist	COUNTY	ROUTE	POST MILES TOTAL PROJECT	SHEET No.	TOTAL SHEETS
01	Men	101	3.8, 5.3	18	99

REGISTERED CIVIL ENGINEER 3-28-16 DATE

3-28-16
PLANS APPROVAL DATE

REGISTERED PROFESSIONAL ENGINEER
NASIM HASAN
No. 74083
Exp. 6-30-17
CIVIL
STATE OF CALIFORNIA

THE STATE OF CALIFORNIA OR ITS OFFICERS OR AGENTS SHALL NOT BE RESPONSIBLE FOR THE ACCURACY OR COMPLETENESS OF SCANNED COPIES OF THIS PLAN SHEET.

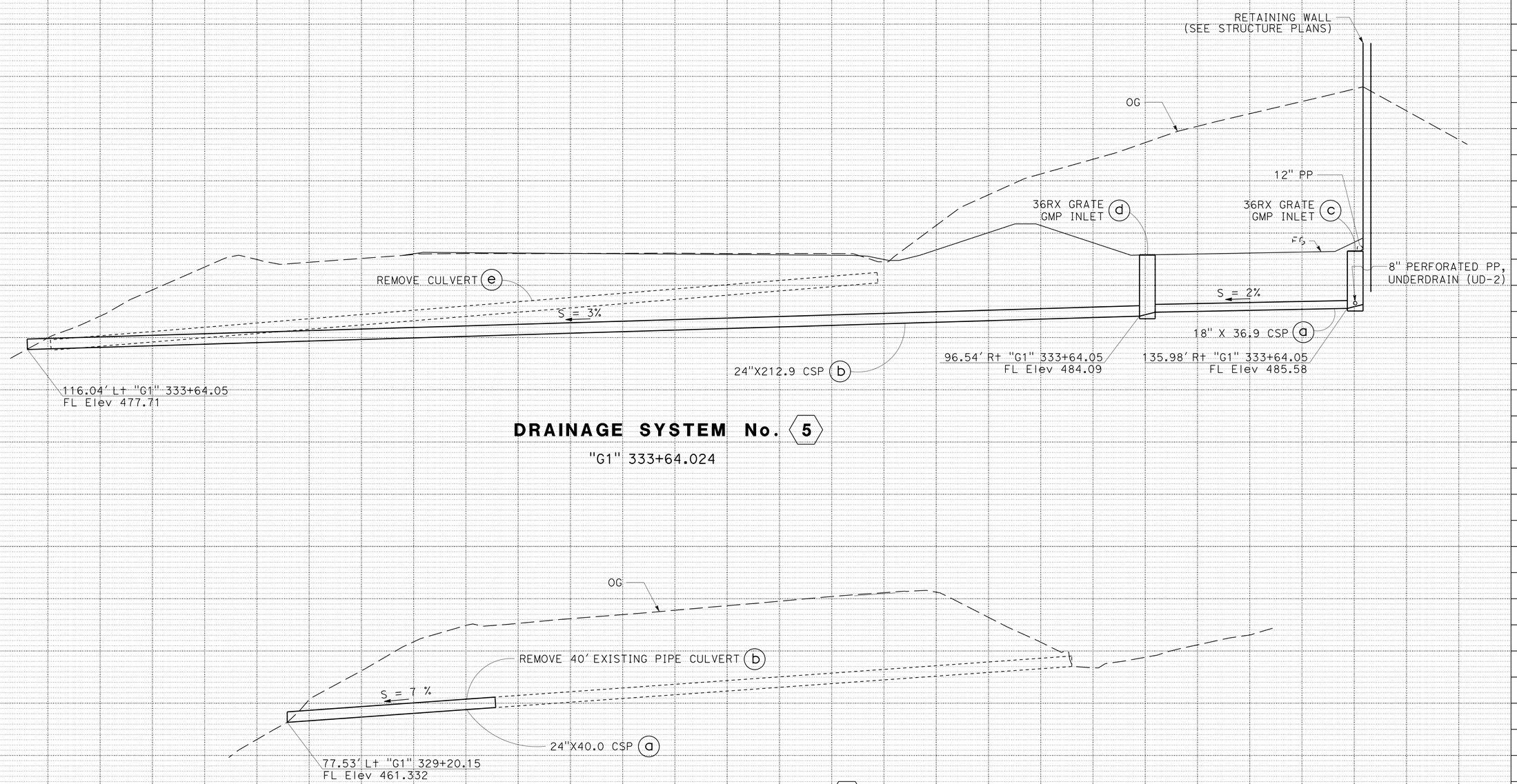

DRAINAGE PROFILES

SCALE: 1" = 10' Horiz.
1" = 10' Vert.

DP-3

REVISED BY | DATE REVISED
NASIM HASAN | DAVID HOPPER
CALCULATED-DESIGNED BY | CHECKED BY
FUNCTIONAL SUPERVISOR: ALI KIANI

STATE OF CALIFORNIA - DEPARTMENT OF TRANSPORTATION
Caltrans® 03-DESIGN

LAST REVISION 00-00-00 | DATE PLOTTED => 18-APR-2016 | TIME PLOTTED => 09:20

Dist	COUNTY	ROUTE	POST MILES TOTAL PROJECT	SHEET No.	TOTAL SHEETS
01	Men	101	3.8, 5.3	19	99

REGISTERED CIVIL ENGINEER 3-28-16 DATE

3-28-16
PLANS APPROVAL DATE

REGISTERED PROFESSIONAL ENGINEER NASIM HASAN No. 74083 Exp. 6-30-17 CIVIL STATE OF CALIFORNIA

THE STATE OF CALIFORNIA OR ITS OFFICERS OR AGENTS SHALL NOT BE RESPONSIBLE FOR THE ACCURACY OR COMPLETENESS OF SCANNED COPIES OF THIS PLAN SHEET.

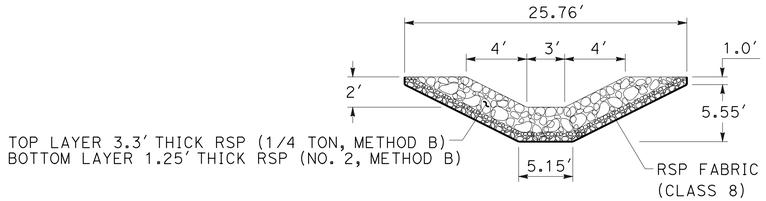

SECTION A-A
NO SCALE

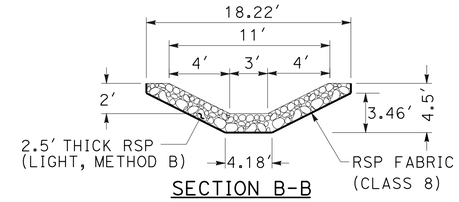

SECTION B-B
NO SCALE

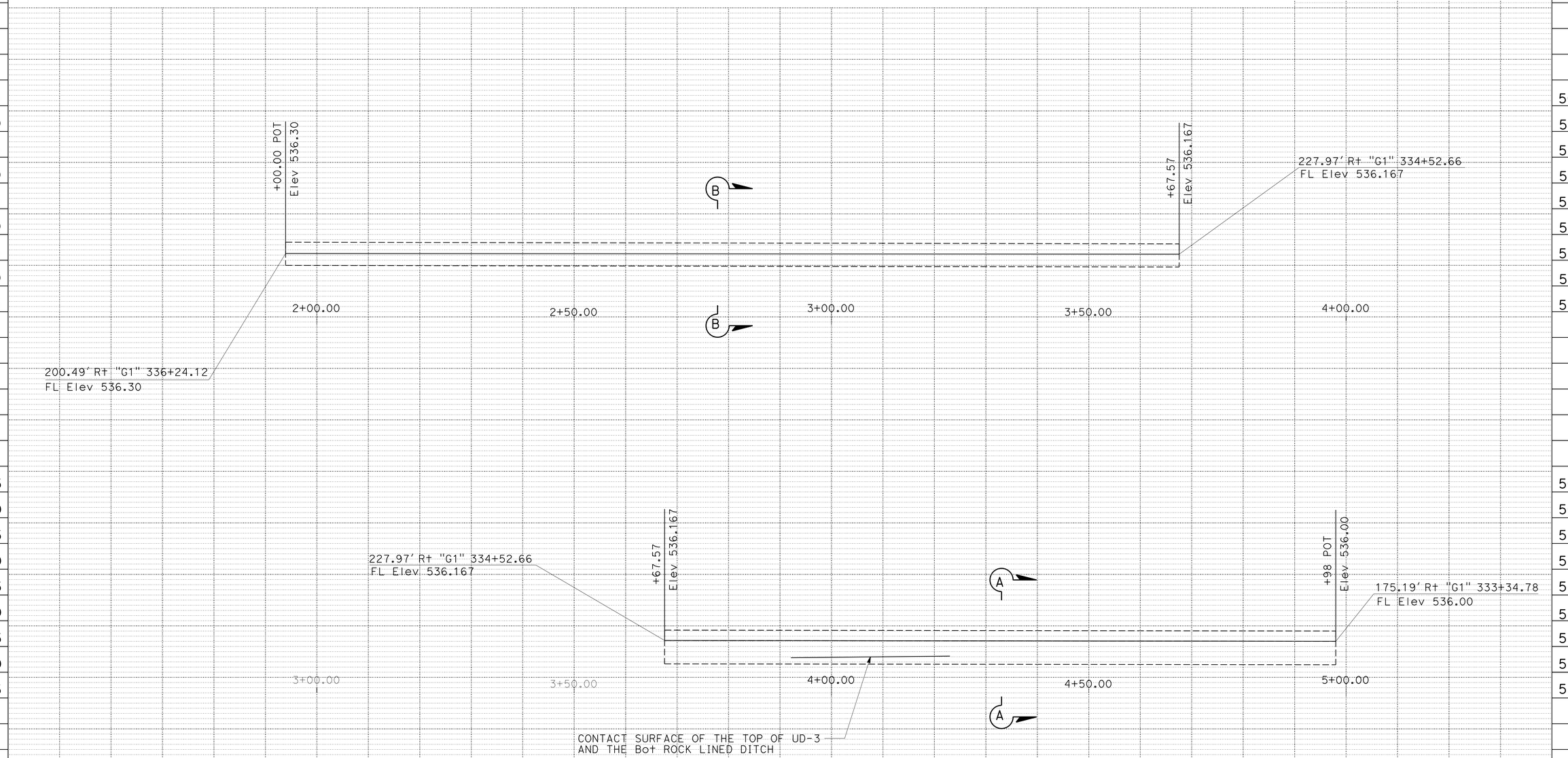

DRAINAGE SYSTEM No. 6

DRAINAGE PROFILES

SCALE: 1" = 10′ Horiz.
1" = 10′ Vert.

DP-4

STATE OF CALIFORNIA - DEPARTMENT OF TRANSPORTATION
Caltrans
03-DESIGN

FUNCTIONAL SUPERVISOR: ALI KIANI
CALCULATED-DESIGNED BY: NASIM HASAN
CHECKED BY: DAVID HOPPER
REVISED BY
DATE REVISED

LAST REVISION 00-00-00 | DATE PLOTTED => 18-APR-2016 | TIME PLOTTED => 09:20

Dist	COUNTY	ROUTE	POST MILES TOTAL PROJECT	SHEET No.	TOTAL SHEETS
01	Men	101	3.8, 5.3	20	99

Clark W. Townsend 3-28-16
REGISTERED CIVIL ENGINEER DATE

3-28-16
PLANS APPROVAL DATE

REGISTERED PROFESSIONAL ENGINEER
CLARK W. TOWNSEND
No. C 47921
Exp. 12-31-17
CIVIL
STATE OF CALIFORNIA

THE STATE OF CALIFORNIA OR ITS OFFICERS OR AGENTS SHALL NOT BE RESPONSIBLE FOR THE ACCURACY OR COMPLETENESS OF SCANNED COPIES OF THIS PLAN SHEET.

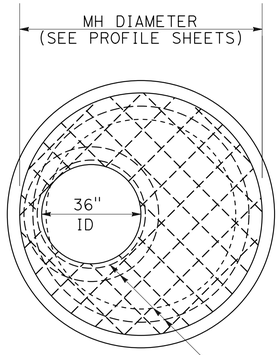

PLAN

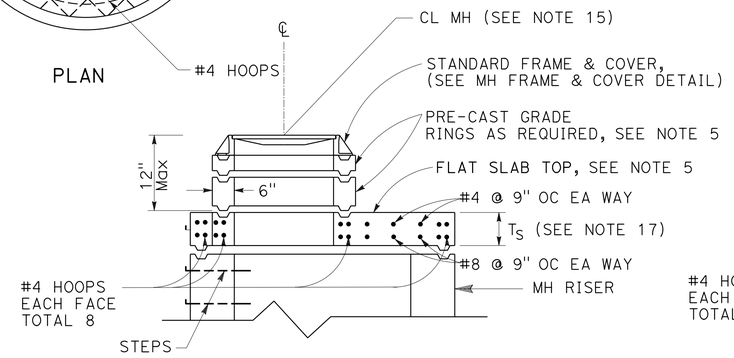

PART ELEVATION

FLAT SLAB TOP DETAIL

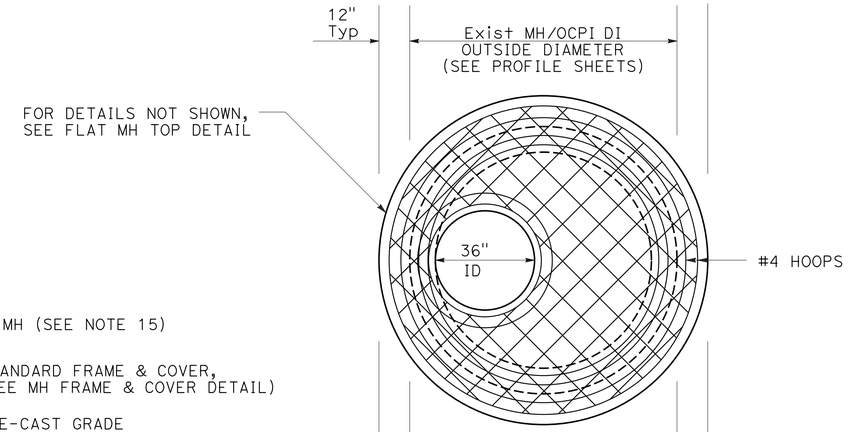

PLAN

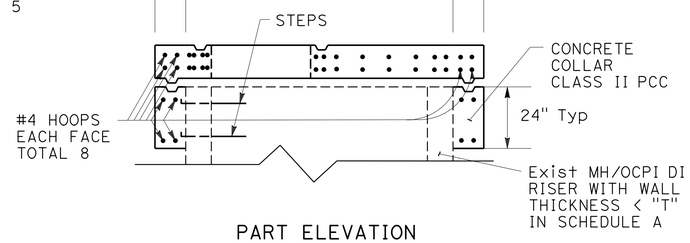

PART ELEVATION

OVERSIZE (OS) FLAT SLAB TOP DETAIL

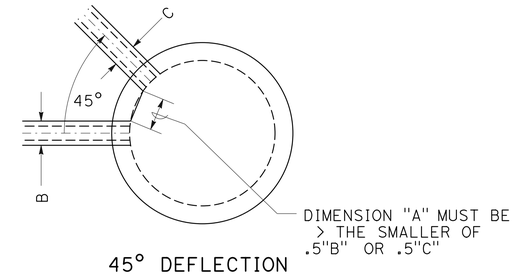

45° DEFLECTION

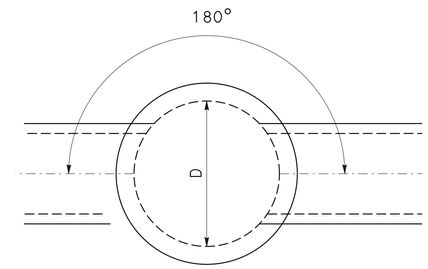

180° DEFLECTION

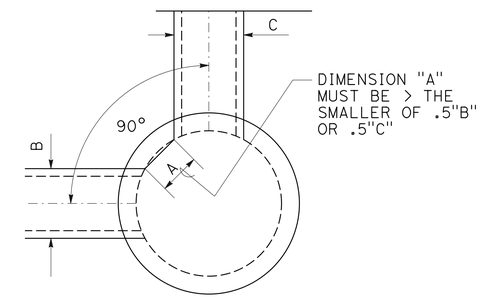

90° DEFLECTION

SCHEDULE A

MH STANDARDS					
DIMENSIONS					
NOMINAL	DEFLECTIONS (DEGREES)				
	135-180	90	45	H < 8 ft	8 ft <= H <= 19 ft
MH ID	Max PIPE ID	Max PIPE ID	Max PIPE ID	T	T
in	in	in	in	in	in
48	24	18	12	6	8
60	30	24	15	6	8
72	42	36	18	8	8
84	48	42	21	8	8
96	60	48	24	9	9
108	66	54	27	10	10

SCHEDULE B

MANHOLE						
		TOP SECTION				
DRAINAGE		FLAT		CL ECCENTRIC MH COVER		
SYSTEM	UNIT	SLAB	CONE	STATION	OFFSET	Elev
				ft	ft	ft
4	f	X		"G1" 331+52.20	53.52 Rt.	494.30

NOTES:

1. "H" IS THE DIFFERENCE IN ELEVATION BETWEEN THE OUTLET PIPE FLOW LINE AND THE FINISHED GRADE AT THE CENTER OF THE COVER.
2. STEPS - NONE REQUIRED WHERE "H" IS LESS THAN 2'-6". WHERE "H" IS 2'-6" OR MORE, INSTALL STEPS WITH LOWEST RUNG 12" ABOVE THE FLOOR AND HIGHEST RUNG NOT MORE THAN 6" BELOW TOP OF CONE SECTION OR RISER SECTION IF NO CONE SECTION USED. THE DISTANCE BETWEEN STEPS SHALL NOT EXCEED 12" AND SHALL BE UNIFORM THROUGHOUT THE LENGTH OF THE WALL. PLACE STEPS IN THE SIDE WITHOUT AN OPENING. STEPS INSERTS MAY BE SUBSTITUTED FOR THE BAR STEPS. STEP INSERTS SHALL COMPLY WITH STATE INDUSTRIAL SAFETY REQUIREMENTS. SEE STANDARD PLAN D74C AND D75C FOR STEP DETAILS.
3. JOINTS MAY BE EITHER KEYED OR TONGUE AND GROOVE.
4. RISERS, CONES, AND GRADE RINGS SHALL CONFORM TO ASTM DESIGNATION C-478. ECCENTRIC CONES SHALL BE REQUIRED WHERE NOMINAL MH DIAMETER > 48".
5. FRAME SHALL BE SECURED TO GRADE RINGS, FLAT SLAB, OR CONE WITH CEMENT MORTAR.
6. BASIN FLOORS SHALL HAVE WOOD TROWEL FINISH AND A MINIMUM SLOPE OF 1:4 FROM ALL DIRECTIONS TOWARD OUTLET PIPE.
7. MINIMUM CLEAR DISTANCE BETWEEN ALL PIPE OUTSIDE DIAMETERS AT THE MANHOLE SHALL BE THE GREATER OF: 8" OR HALF THE OUTER DIAMETER OF THE SMALLER PIPE.
8. CAST-IN-PLACE MANHOLE WALLS MAY BE APPROVED BY THE ENGINEER. ALL CAST-IN-PLACE MANHOLES MUST BE FORMED IN A CIRCULAR SHAPE CONSISTENT WITH THE DIAMETER SPECIFIED ON THE PLANS AND REQUIRED TO FIT UPPER PRECAST SECTIONS. MINIMUM WALL THICKNESS SHALL BE AS SHOWN IN SCHEDULE A. PRECAST RINGS SHALL BE SET WET OR REQUIRED KEY FORM SHALL BE INCLUDED IN THE FORM WORK TO ACCEPT THE PRECAST KEY. CONCRETE SHALL BE CONSOLIDATED BY AN ACCEPTABLE METHOD TO ENSURE ALL VOIDS ARE REMOVED.
9. PRECAST RISER SECTIONS MAY BE USED WHEN "H" < 8'.
10. THE MANHOLE FRAME AND COVER SHALL BE MADE OF GRAY CAST IRON. MASS FOR PAYMENT IS 675 LBS.
11. ALL PARTS OF THE MANHOLE FRAME AND COVER EXCEPT MACHINED SURFACES SHALL BE COATED WITH ASPHALTUM PAINT.
12. THE MANHOLE FRAME AND COVER SHALL BE TESTED FOR ACCURACY OF FIT AND SHALL BE MARKED IN SETS BEFORE DELIVERY. THE COVER SHALL FIT THE FRAME SNUGLY BUT NOT TIGHTLY.
13. THE MASS OF THE MANHOLE FRAME AND COVER SHALL NOT VARY MORE THAN 10 PERCENT FROM THE MASS OF PAYMENT.
14. SEE PROFILE SHEETS FOR STATION AND OFFSET OF MH ℄ .
15. CONSTRUCTION PAPER TO BE PLACED BETWEEN CONCRETE COLLAR & OS FLAT SLAB TOP TO FORM JOINT.
16. DIMENSION "T_S" = 8" FOR MH ID <= 96". DIMENSION "T_S"= 12" FOR MH ID > 96" .
17. RISER AND CONE SECTION REINFORCEMENT PER MANHOLE MANUFACTURER'S SPECIFICATIONS.
18. THE MAXIMUM MH ID= 108".

MH DETAIL SHEET 1 OF 2

DRAINAGE DETAILS

NO SCALE

DD-1

REVISED BY	DATE REVISED
04/01/14	11/02/15

CALCULATED- DESIGNED BY: CLARK W. TOWNSEND
CHECKED BY: NASIM HASAN
FUNCTIONAL SUPERVISOR: DENNIS JAGODA

STATE OF CALIFORNIA - DEPARTMENT OF TRANSPORTATION
Caltrans
03-DIVISION OF ENGINEERING HYDRAULICS

LAST REVISION 11-02-15 | DATE PLOTTED => 18-APR-2016 | TIME PLOTTED => 09:20

Dist	COUNTY	ROUTE	POST MILES TOTAL PROJECT	SHEET No.	TOTAL SHEETS
01	Men	101	3.8, 5.3	21	99

Clark W. Townsend 3-28-16
REGISTERED CIVIL ENGINEER DATE

3-28-16
PLANS APPROVAL DATE

REGISTERED PROFESSIONAL ENGINEER CLARK W. TOWNSEND No. C 47921 Exp. 12-31-17 CIVIL STATE OF CALIFORNIA

THE STATE OF CALIFORNIA OR ITS OFFICERS OR AGENTS SHALL NOT BE RESPONSIBLE FOR THE ACCURACY OR COMPLETENESS OF SCANNED COPIES OF THIS PLAN SHEET.

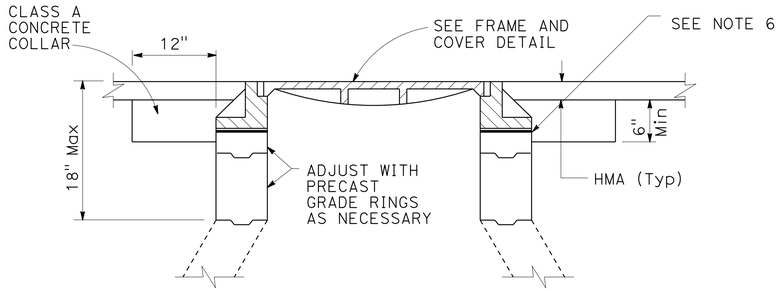

MH GRADE ADJUSTMENT DETAIL

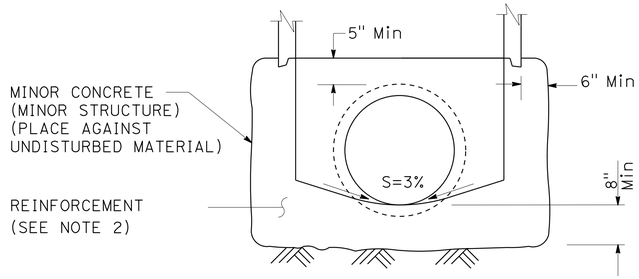

CAST-IN-PLACE BASE

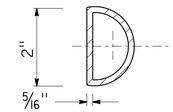

LETTER "D" AT CENTER OF COVER

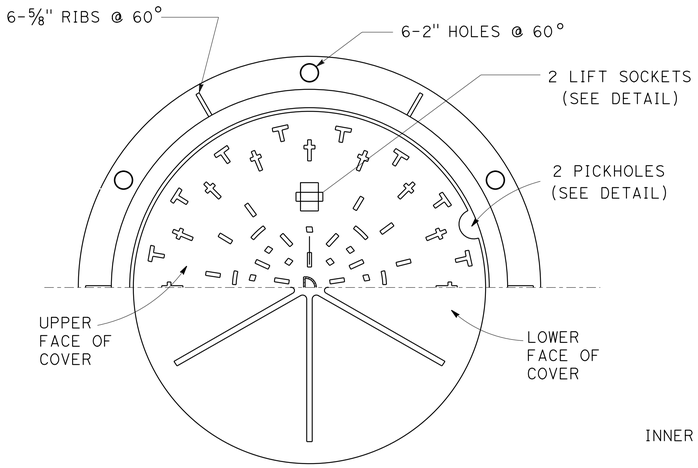

HALF PLAN OF MH FRAME AND COVER
SEE ABOVE FOR DIMENSIONS OF LETTERS "D"

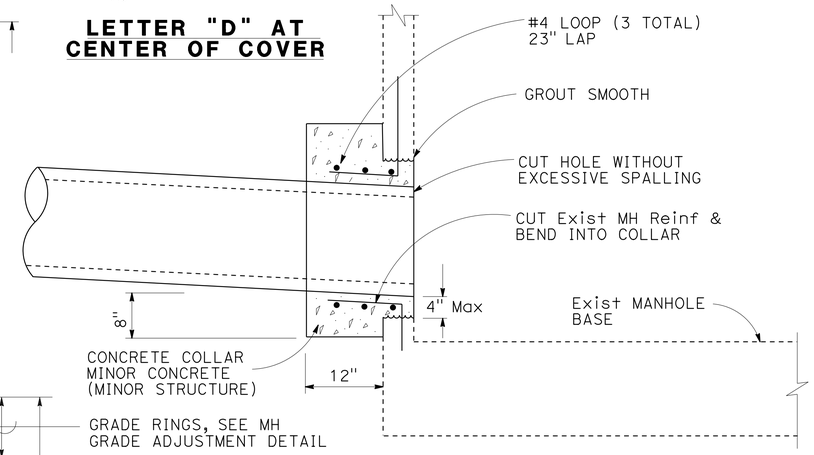

CONNECTION TO Exist MH

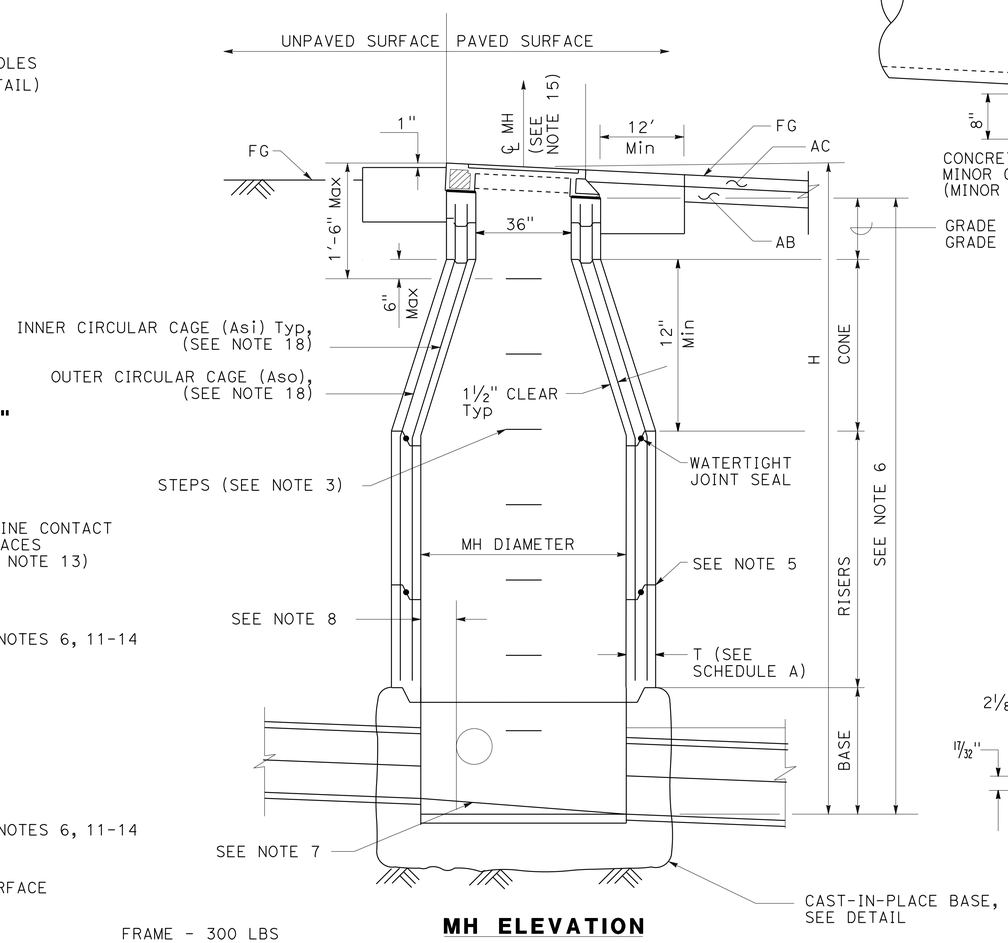

MH ELEVATION

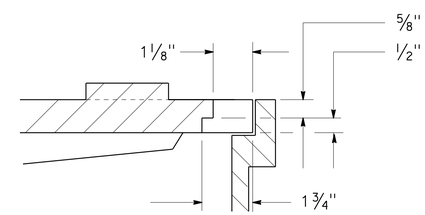

PICK HOLE DETAIL

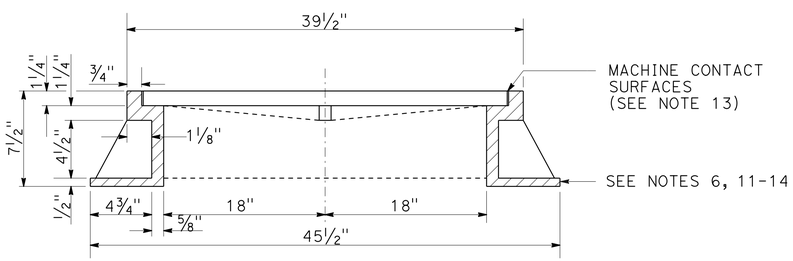

SECTION ON ℄ THROUGH FRAME

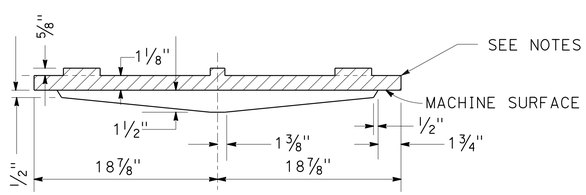

SECTION ON ℄ THROUGH COVER

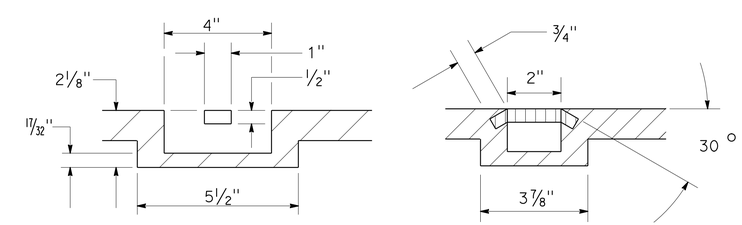

LIFT SOCKET DETAIL

FRAME -	300 LBS
COVER -	375 LBS
TOTAL	675 LBS

APPROX WEIGHTS

MANHOLE FRAME AND COVER DETAIL

MH DETAIL SHEET 2 OF 2

DRAINAGE DETAILS
NO SCALE
DD-2

REVISED BY	DATE REVISED
CLARK W. TOWNSEND	04/01/14
NASIM HASAN	04/01/14

CALCULATED-DESIGNED BY / CHECKED BY

FUNCTIONAL SUPERVISOR: DENNIS JAGODA

STATE OF CALIFORNIA - DEPARTMENT OF TRANSPORTATION
Caltrans® 03-DIVISION OF ENGINEERING HYDRAULICS

LAST REVISION 04-01-14 | DATE PLOTTED => 18-APR-2016 | TIME PLOTTED => 09:20

Dist	COUNTY	ROUTE	POST MILES TOTAL PROJECT	SHEET No.	TOTAL SHEETS
01	Men	101	3.8, 5.3	22	99

REGISTERED CIVIL ENGINEER 3-28-16 DATE

3-28-16
PLANS APPROVAL DATE

REGISTERED PROFESSIONAL ENGINEER NASIM HASAN No. 74083 Exp. 6-30-17 CIVIL STATE OF CALIFORNIA

THE STATE OF CALIFORNIA OR ITS OFFICERS OR AGENTS SHALL NOT BE RESPONSIBLE FOR THE ACCURACY OR COMPLETENESS OF SCANNED COPIES OF THIS PLAN SHEET.

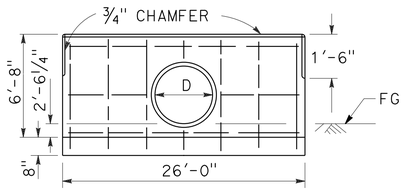

FRONT ELEVATION
SINGLE HEADWALL

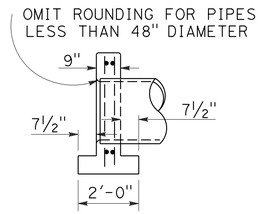

SECTION, SINGLE HEADWALL

HEADWALL DETAIL

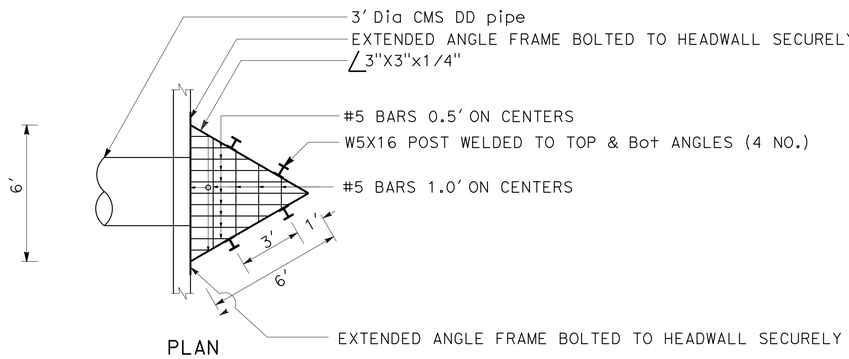

PLAN

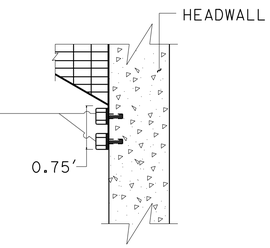

PLAN

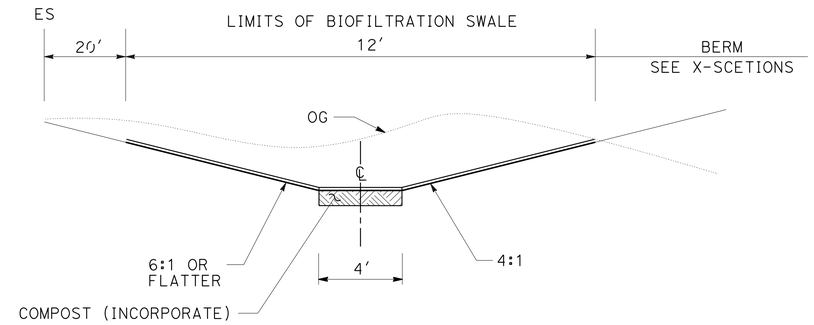

"BS1" 334+90.00 TO 336+81.63

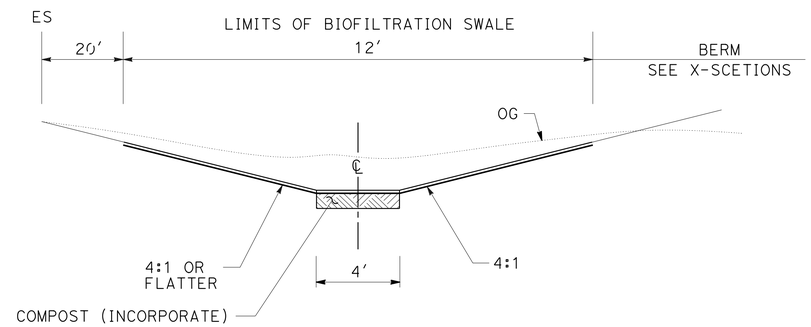

"BS1" 333+64.00 TO 334+40.00

TYPICAL SECTION BIOFILTRATION SWALE

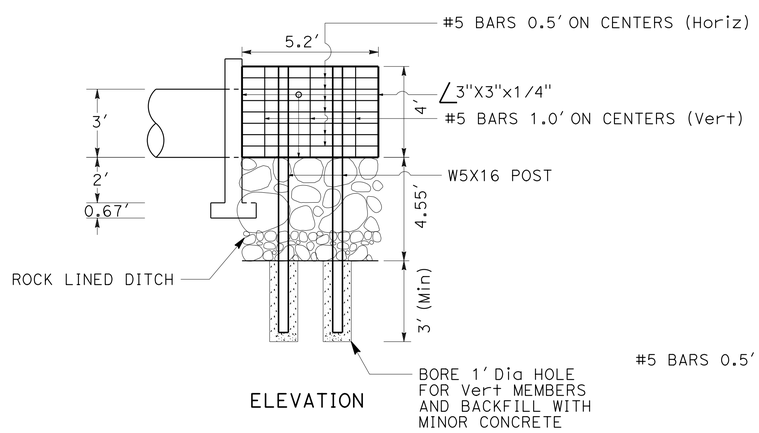

ELEVATION

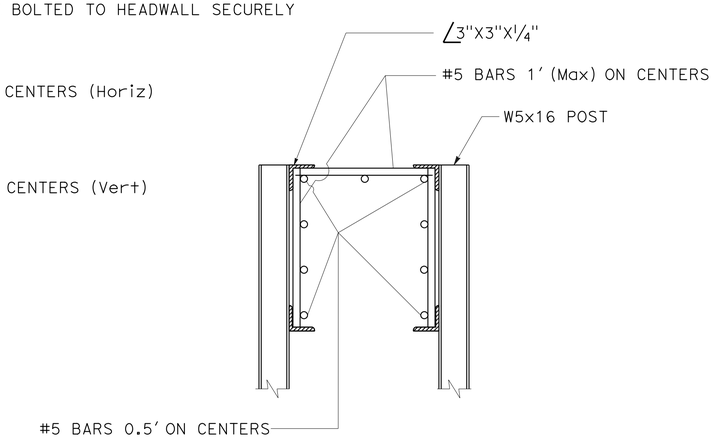

CONNECTION DETAIL OF TRASH RACK

TRASH RACK DETAIL

DRAINAGE DETAILS

NO SCALE

DD-3

STATE OF CALIFORNIA - DEPARTMENT OF TRANSPORTATION
Caltrans
03-DESIGN

FUNCTIONAL SUPERVISOR: ALI KIANI
CALCULATED-DESIGNED BY: NASIM HASAN
CHECKED BY: SATISH PRAKASH
REVISED BY
DATE REVISED

LAST REVISION 00-00-00
DATE PLOTTED => 18-APR-2016
TIME PLOTTED => 09:20

Dist	COUNTY	ROUTE	POST MILES TOTAL PROJECT	SHEET No.	TOTAL SHEETS
01	Men	101	3.8, 5.3	23	99

REGISTERED CIVIL ENGINEER 3-28-16 DATE

3-28-16
PLANS APPROVAL DATE

REGISTERED PROFESSIONAL ENGINEER NASIM HASAN No. 74083 Exp. 6-30-17 CIVIL STATE OF CALIFORNIA

THE STATE OF CALIFORNIA OR ITS OFFICERS OR AGENTS SHALL NOT BE RESPONSIBLE FOR THE ACCURACY OR COMPLETENESS OF SCANNED COPIES OF THIS PLAN SHEET.

NOTES:

1. WEIR 2 WILL BE PLACED 80' APART FROM WEIR 1
2. FOR PLAN VIEW OF DITCH SEE D-1.
3. FOR WEIR LOCATIONS SEE DP-1

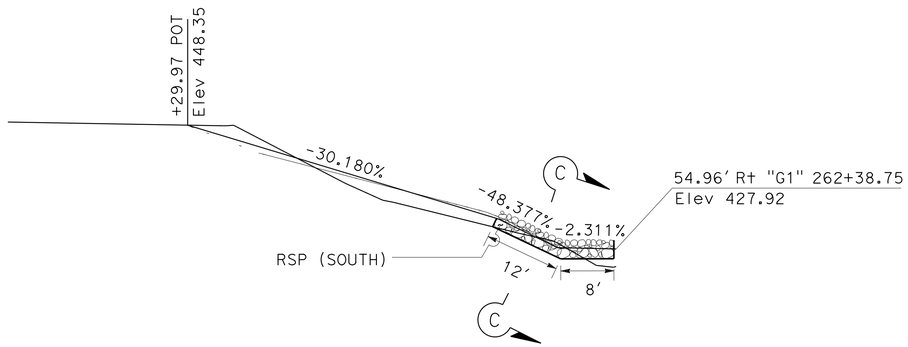

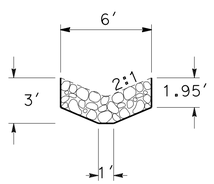

SECTION C-C

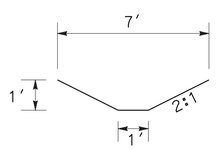

SECTION B-B

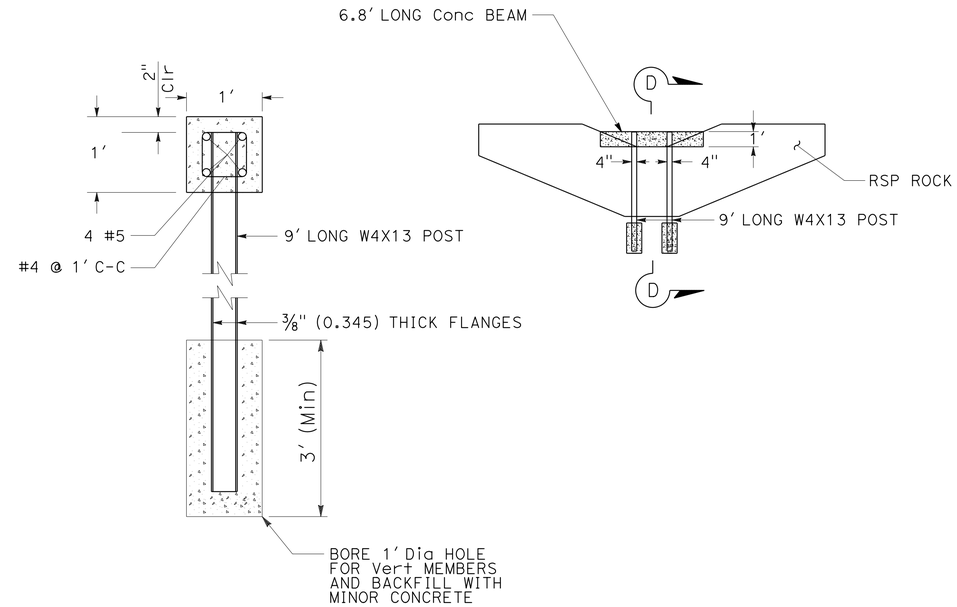

SECTION D-D

DETAILS OF WEIR 1 & WEIR 2 ON DS-2

SEE SHEET D-2 FOR LOCATION

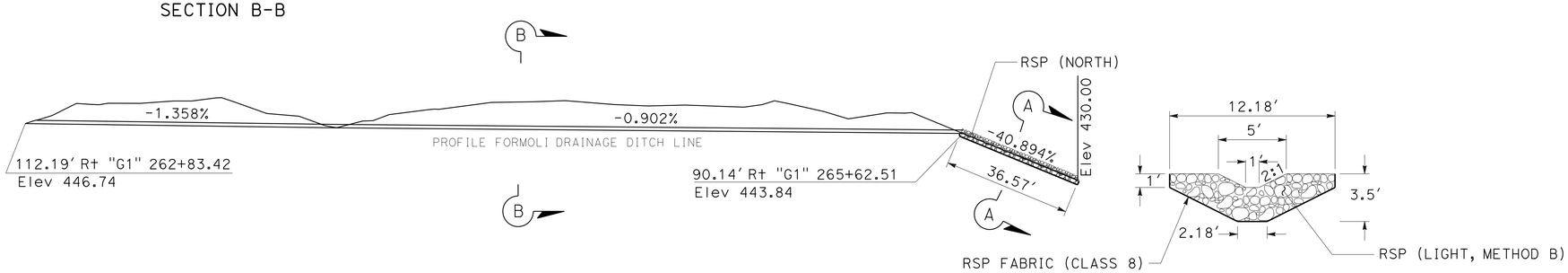

SECTION A-A

DETAILS OF DRAINAGE DITCH AT LOCATION 1

DRAINAGE DETAILS

NO SCALE

DD-4

REVISED BY | DATE REVISED

NASIM HASAN | NASIM HASAN

CALCULATED-DESIGNED BY | CHECKED BY

FUNCTIONAL SUPERVISOR: ALI KIANI

STATE OF CALIFORNIA - DEPARTMENT OF TRANSPORTATION

Caltrans 03-DESIGN

LAST REVISION 00-00-00 | DATE PLOTTED => 18-APR-2016 | TIME PLOTTED => 09:20

DRAINAGE QUANTITIES

DRAINAGE SHEET No.	DRAINAGE SYSTEM No. (X)	DRAINAGE UNIT (X)	REMOVE CULVERT LF	ABANDON CULVERT LF	REMOVE INLET EA	(N) DITCH EXCAVATION CY	36" CORRUGATED STEEL PIPE INLET (.109 THICK) LF	36" PRECAST CONCRETE PIPE MANHOLE LF	18" CORRUGATED STEEL PIPE (.109" THICK) LF	24" CORRUGATED STEEL PIPE (.138" THICK) LF	36" CORRUGATED STEEL PIPE (.138" THICK) LF	36" CORRUGATED STEEL PIPE DOWNDRAIN (.109" THICK) LF	ROCK SLOPE PROTECTION (1T, METHOD A) CY	ROCK SLOPE PROTECTION (1/2 T, METHOD B) CY	ROCK SLOPE PROTECTION (1/4 T, METHOD B) CY	ROCK SLOPE PROTECTION (No. 1, METHOD B) CY	ROCK SLOPE PROTECTION (No. 2, METHOD B) CY	ROCK SLOPE PROTECTION FABRIC (CLASS 8) SQYD	MINOR CONCRETE (MINOR STRUCTURE) CY	MISCELLLANEOUS IRON AND STEEL LB	CONCRETE ANCHOR AND CABLE ASSEMBLY EA	DESCRIPTION	STATION	DRAINAGE SYSTEM No. (X)	DRAINAGE UNIT (X)
D-1	1	a							19.6													18" CSP (.109" THICK)	"G1" 262+41 TO 262+45	1	a
		b								162.9												24" CSP (.138" THICK)	"G1" 262+45 TO 262+71		b
		c					10.4												0.23			36" CSP INLET (.109 THICK)	"G1" 262+41.49		c
																				215		36RX GRATE			
		d					4.2												0.23			36" CSP INLET (.109 THICK)	"G1" 262+45.42		d
																				215		36RX GRATE			
		e	44																			REMOVE CULVERT	"G1" 262+44.22 TO 262+49.37		e
		f		110.4																		ABANDON CULVERT	"G1" 262+49.37 TO 262+60.48		f
		g			1																	REMOVE INLET	"G1" 262+45.42		g
						500.3																DITCH EXCAVATION	"G1" 262+441.49 TO 262+71		
D-2	2													241.2								RSP (1/2 TON, METHOD B) (CY)	"G1" 325+53.63 TO "G1" 326+47.53	2	
															313.2							RSP (1/4 TON, METHOD B) (CY)			
																91.9						RSP (No. 1, METHOD B) (CY)			
																	176.2					RSP (No. 2, METHOD B) (CY)			
																		678.5				RSP FABRIC (CLASS 8)			
			83.5																			REMOVE CULVERT			
						934.2																DITCH EXCAVATION			
																			0.85			WEIR 1 AND WEIR 2			
																				543		WEIR POSTS AND REBARS			
D-2	3	a								40												24" CSP (.138" THICK)	"G1" 329+19.49	3	a
		b	40																			REMOVE CULVERT			b
						111.8																DITCH EXCAVATION			
D-3	4	a										128										36" CSP DD (.109" THICK)	"G1" 332+34 TO 333+10.2	4	a
		b										105.1										36" CSP DD (.109" THICK)	"G1" 331+30.9 TO 332+52.3		b
		c									120.6											36" CSP (.138" THICK)	"G1" 331+18.38 TO 331+51.03		c
		d										73.0										36" CSP DD (.109" THICK)			d
		e																	2.33			TYPE G2, DI	"G1" 332+32.44		e
																				263		TYPE 24-12, GRATE			
		f						6.93														72" PIPE MANHOLE	"G1" 331+51.27		f
		g			1																	REMOVE INLET			g
		h	40																			REMOVE CULVERT	"G1" 331+48.43 TO 331+51.68		h
		i		98.8																		ABANDON CULVERT	"G1" 331+40.31 TO 331+48.43		i
		j											31.5									RSP (1T, METHOD A) (CY)	"G1" 331+10.4 TO 331+23.2		j
		k																59.2				RSP FABRIC (CLASS 8)			k
		l																	6.10			HEADWALL CONCRETE	"G1" 333+10.18		l
																				334		HEADWALL REINFORCEMENT			
		m																	0.35	1,166		TRASH RACK	"G1" 333+10.93		m
		n																			1	Conc ANCHOR AND CABLE ASSEMBLY	"G1" 331+14.7 TO 331+36.1		n
						692.5																DITCH EXCAVATION	"G1" 331+51.3 TO 333+10.2		
D-3	5	a							36.9													18" CSP (.109" THICK)	"G1" 333+64.18	5	a
		b								212.9												24" CSP (.138" THICK)			b
		c					11.3															GMP INLET			c
																				215		36RX GRATE			
		d					12.5															GMP INLET			d
																				215		36RX GRATE			
		e	158.7																			REMOVE CULVERT			e
						752.6																DITCH EXCAVATION			
TOTAL			366.2	209.2	2		38.4	6.93	56.5	415.8	120.6	306.1	31.5	241.2	313.2	91.9	176.2	737.7	10.09	3,166	1				

Dist	COUNTY	ROUTE	POST MILES TOTAL PROJECT	SHEET No.	TOTAL SHEETS
01	Men	101	3.8, 5.3	24	99

REGISTERED CIVIL ENGINEER 3-28-16 DATE

3-28-16
PLANS APPROVAL DATE

REGISTERED PROFESSIONAL ENGINEER NASIM HASAN No. 74083 Exp. 6-30-17 CIVIL STATE OF CALIFORNIA

THE STATE OF CALIFORNIA OR ITS OFFICERS OR AGENTS SHALL NOT BE RESPONSIBLE FOR THE ACCURACY OR COMPLETENESS OF SCANNED COPIES OF THIS PLAN SHEET.

REVISED BY | DATE REVISED

NASIM HASAN | DAVID A. HOPPER

CALCULATED-DESIGNED BY | CHECKED BY

FUNCTIONAL SUPERVISOR: ALI KIANI

STATE OF CALIFORNIA - DEPARTMENT OF TRANSPORTATION

Caltrans® 03-DESIGN

DRAINAGE QUANTITIES
DQ-1

LAST REVISION 00-00-00 | DATE PLOTTED => 18-APR-2016 | TIME PLOTTED => 09:20

Dist	COUNTY	ROUTE	POST MILES TOTAL PROJECT	SHEET No.	TOTAL SHEETS
01	Men	101	3.8, 5.3	25	99

REGISTERED CIVIL ENGINEER 3-28-16 DATE

3-28-16
PLANS APPROVAL DATE

REGISTERED PROFESSIONAL ENGINEER NASIM HASAN No. 74083 Exp. 6-30-17 CIVIL STATE OF CALIFORNIA

THE STATE OF CALIFORNIA OR ITS OFFICERS OR AGENTS SHALL NOT BE RESPONSIBLE FOR THE ACCURACY OR COMPLETENESS OF SCANNED COPIES OF THIS PLAN SHEET.

DRAINAGE QUANTITIES

DRAINAGE SHEET No.	DRAINAGE SYSTEM No. ⟨X⟩	DRAINAGE UNIT ⊗	REMOVE CULVERT LF	ABANDON CULVERT LF	REMOVE INLET EA	DITCH EXCAVATION CY	(N) DITCH EXCAVATION CY	36" CORRUGATED STEEL PIPE INLET (.109 THICK) LF	36" PRECAST CONCRETE PIPE MANHOLE LF	18" CORRUGATED STEEL PIPE (.109" THICK) LF	24" CORRUGATED STEEL PIPE (.138" THICK) LF	36" CORRUGATED STEEL PIPE (.138" THICK) LF	36" CORRUGATED STEEL PIPE DOWNDRAIN (.109" THICK) LF	ROCK SLOPE PROTECTION (1T, METHOD A) CY	ROCK SLOPE PROTECTION (1/2 T, METHOD B) CY	ROCK SLOPE PROTECTION (1/4 T, METHOD B) CY	ROCK SLOPE PROTECTION (No. 1, METHOD B) CY	ROCK SLOPE PROTECTION (No. 2, METHOD B) CY	ROCK SLOPE PROTECTION FABRIC (CLASS 8) SQYD	MINOR CONCRETE (MINOR STRUCTURE) CY	MISCELLLANEOUS IRON AND STEEL LB	CONCRETE ANCHOR AND CABLE ASSEMBLY EA	ROCK SLOPE PROTECTION (LIGHT, METHOD B) CY	ROCK SLOPE PROTECTION (FACING, METHOD B) CY	DESCRIPTION	STATION	DRAINAGE SYSTEM No. ⟨X⟩	DRAINAGE UNIT ⊗
D-3	6						1,037																		DITCH EXCAVATION	"G1" 333+11.67 TO "G1" 336+27.31	6	
																324.1									RSP (1/4 TON, METHOD B) (CY)			
																							279.8		RSP (LIGHT, METHOD B) (CY)			
																		172.4							RSP (No. 2, METHOD B) (CY)			
																			877.4						RSP FABRIC (CLASS 8)			
							1,037									324.1		172.4	877.4				279.8		TOTAL (THIS SHEET)			
			366.2	209.2	2			38.4	6.93	56.5	415.8	120.6	306.1	31.5	241.2	313.2	91.9	176.2	737.7	10.09	3,166	1			TOTAL (DQ1 SHEET)			
						44.9													76.8				36.8	8.6	TOTAL (DRAINAGE DITCH WITH RSP AT LOCATION 1 TABLE)			
TOTAL			366.2	209.2	2	44.9		38.4	6.93	56.5	415.8	120.6	306.1	31.5	241.2	637.3	91.9	348.6	1,691.9	10.09	3,166	1	316.6	8.6				

(N) - NOT A SEPARATE PAY ITEM, FOR INFORMATION ONLY

DRAINAGE DITCH WITH RSP AT LOCATION 1

DRAINAGE SHEET No.	DITCH EXCAVATION CY	ROCK SLOPE PROTECTION (LIGHT, METHOD B) CY	ROCK SLOPE PROTECTION (FACING, METHOD B) CY	ROCK SLOPE PROTECTION FABRIC (CLASS 8) SQYD	DESCRIPTION	STATION
D-1 & DD-4	44.9				LOCATION 1 BEHIND THE WALL	FROM "G1" 262+83.42 TO "G1" 265+62.46
		36.8		62.5	RSP (NORTH)	FROM "G1" 265+62.46 TO "G1" 265+98.62
			8.6	14.3	RSP (SOUTH)	FROM "G1" 262+21.04 TO "G1" 262+38.75
TOTAL	44.9*	36.8*	8.6*	76.8*		

*FOR TOTAL QUANTITIES, SEE DRAINAGE QUANTITIES

DRAINAGE QUANTITIES
DQ-2

REVISED BY | DATE REVISED
NASIM HASAN | SATISH PRAKASH
CALCULATED-DESIGNED BY | CHECKED BY
FUNCTIONAL SUPERVISOR: ALI KIANI
STATE OF CALIFORNIA - DEPARTMENT OF TRANSPORTATION
Caltrans 03-DESIGN

LAST REVISION 00-00-00 | DATE PLOTTED => 18-APR-2016 | TIME PLOTTED => 09:20

Dist	COUNTY	ROUTE	POST MILES TOTAL PROJECT	SHEET No.	TOTAL SHEETS
01	Men	101	3.8, 5.3	26	99

Sheri M. Rodriguez 3-28-16
REGISTERED CIVIL ENGINEER DATE

3-28-16
PLANS APPROVAL DATE

REGISTERED PROFESSIONAL ENGINEER
SHERI M. RODRIGUEZ
No. C66861
Exp. 9-30-16
CIVIL
STATE OF CALIFORNIA

THE STATE OF CALIFORNIA OR ITS OFFICERS OR AGENTS SHALL NOT BE RESPONSIBLE FOR THE ACCURACY OR COMPLETENESS OF SCANNED COPIES OF THIS PLAN SHEET.

NOTE:
EXACT SIGN LOCATION TO BE DETERMINED BY THE ENGINEER.

STATIONARY MOUNTED CONSTRUCTION AREA SIGNS

◯	TYPE	SIGN MESSAGE	PANEL SIZE (IN)	No. OF POSTS AND SIZE (IN)	No. OF SIGNS
A	C40(CA)	TRAFFIC FINES DOUBLED IN CONSTRUCTION ZONES	144 x 60	2 - 6 x 8	2
B	W20-1	ROAD WORK AHEAD	48 x 48	1 - 6 x 6	2
C*	C20(CA)	RIGHT LANE CLOSED AHEAD	48 x 48	1 - 6 x 6	1
D	W11-1	BICYCLE SYMBOL	36 x 36	1 - 4 x 6	2
	W16-1	SHARE THE ROAD	24 x 30		
E*	W4-2R	(RIGHT) LANE ENDS SYMBOL	48 x 48	1 - 6 x 6	1
F	G20-2	END ROAD WORK	48 x 24	1 - 4 x 6	2

* SIGNS TO BE COVERED WHEN NB#2 LANE IS NOT CLOSED.

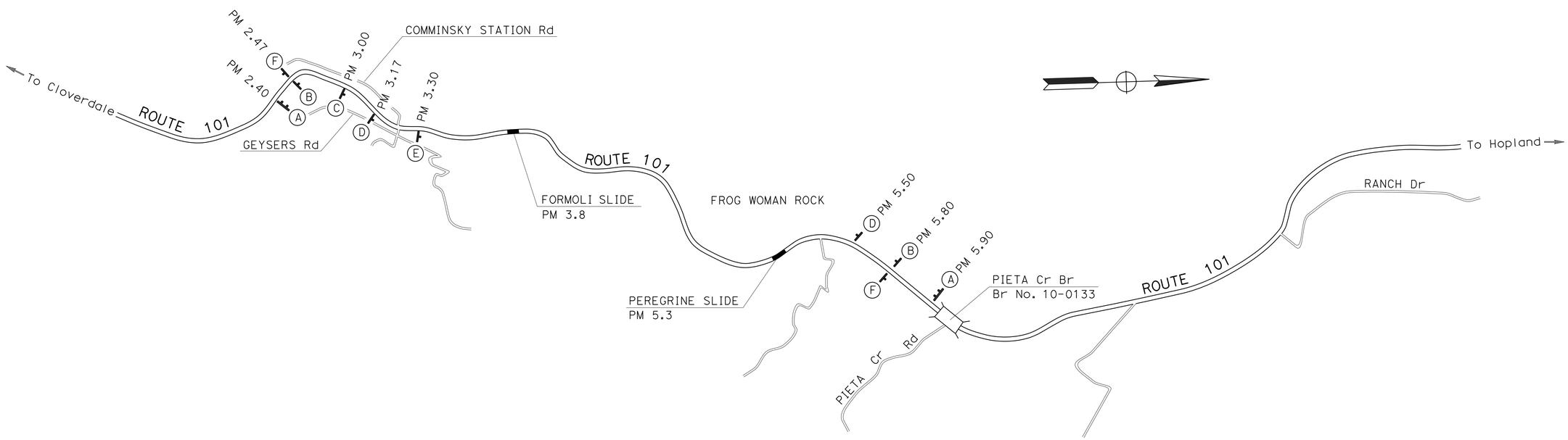

NO SCALE

CONSTRUCTION AREA SIGNS

CS-1

APPROVED FOR CONSTRUCTION AREA SIGN WORK ONLY

STATE OF CALIFORNIA - DEPARTMENT OF TRANSPORTATION
TRAFFIC OPERATIONS

FUNCTIONAL SUPERVISOR: TROY ARSENEAU
CALCULATED-DESIGNED BY: SHERI M. RODRIGUEZ
CHECKED BY
REVISED BY
DATE REVISED

P:\proj5\01\0b500\drafting\01120001331a001.dgn

LAST REVISION 00-00-00
DATE PLOTTED => 18-APR-2016
TIME PLOTTED => 09:20

Dist	COUNTY	ROUTE	POST MILES TOTAL PROJECT	SHEET No.	TOTAL SHEETS
01	Men	101	3.8, 5.3	27	99

Sheri M. Rodriguez 3-28-16
REGISTERED CIVIL ENGINEER DATE

3-28-16
PLANS APPROVAL DATE

REGISTERED PROFESSIONAL ENGINEER SHERI M. RODRIGUEZ No. C66861 Exp. 9-30-16 CIVIL STATE OF CALIFORNIA

THE STATE OF CALIFORNIA OR ITS OFFICERS OR AGENTS SHALL NOT BE RESPONSIBLE FOR THE ACCURACY OR COMPLETENESS OF SCANNED COPIES OF THIS PLAN SHEET.

NOTES:

1. CHANNELIZER SPACING = 50' C-C UNLESS OTHERWISE NOTED.
2. CHANNELIZERS TO BE PLACED 4' OFFSET FROM Temp STRIPE.
3. SIGNS TO BE SALVAGED FNBT TO BE REMOVED PRIOR TO IMPLEMENTATION OF THIS PLAN.
4. SALVAGED BARRIER AND TYPE P MARKERS TO BE SALVAGED PRIOR TO PLACEMENT OF Temp RAILING (TYPE K).
5. SEE SPECIAL PROVISIONS FOR SALVAGE LOCATIONS.

LEGENDS:

- ● CHANNELIZER (SURFACE MOUNTED)
- FLASHING ARROW BOARD
- XX Temp TRAFFIC STRIPE (PAINT) DETAIL
- – Temp TRAFFIC STRIPE (PAINT)

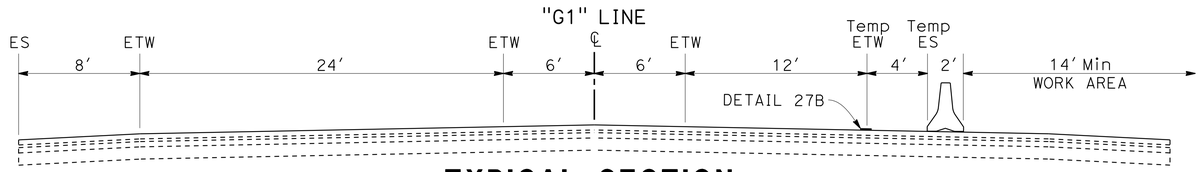

TYPICAL SECTION
FORMOLI SLIDE

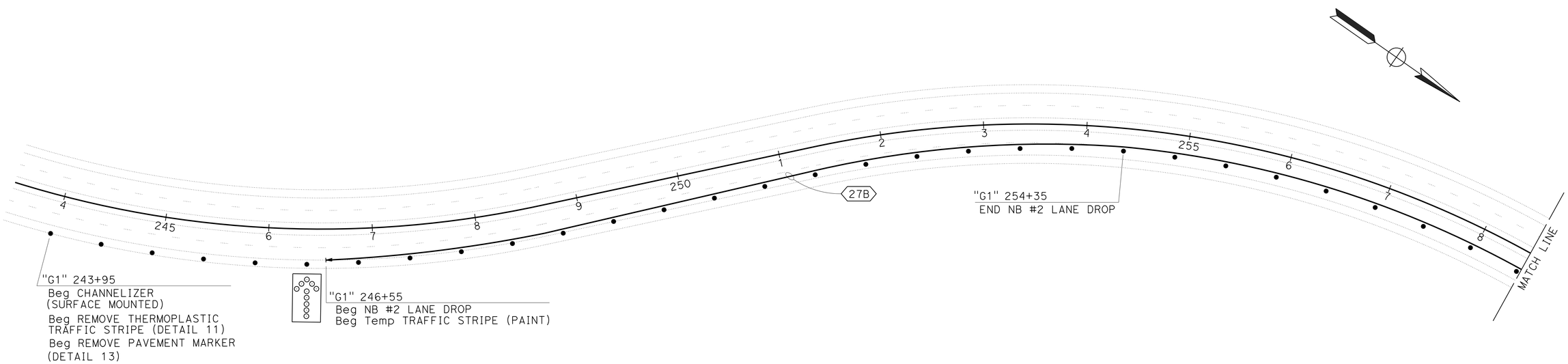

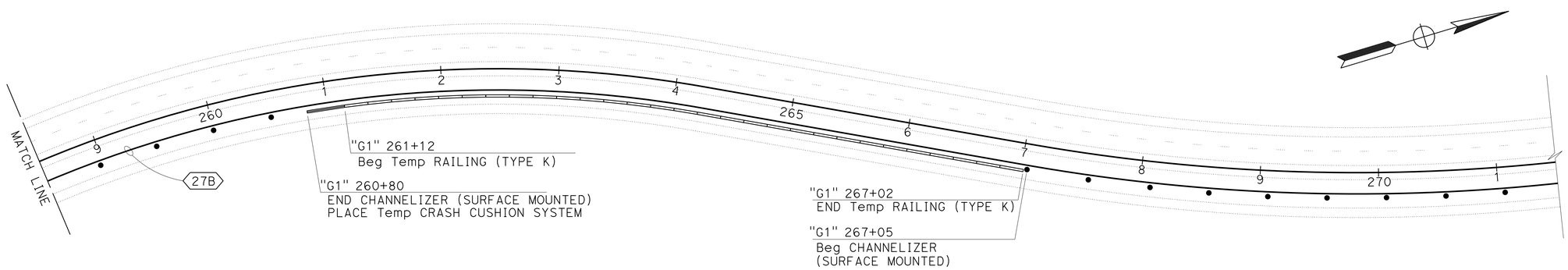

APPROVED FOR TRAFFIC HANDLING INFORMATION ONLY

TRAFFIC HANDLING PLAN
SCALE: 1" = 50'

TH-1

REVISED BY | DATE REVISED
SHERI M. RODRIGUEZ
CALCULATED-DESIGNED BY | CHECKED BY
FUNCTIONAL SUPERVISOR
TROY ARSENEAU

STATE OF CALIFORNIA - DEPARTMENT OF TRANSPORTATION
Caltrans
TRAFFIC OPERATIONS

P:\proj5\01\ob500\drafting\0112000133md001.dgn

LAST REVISION 00-00-00 | DATE PLOTTED => 18-APR-2016 | TIME PLOTTED => 09:20

BORDER LAST REVISED 7/2/2010 | USERNAME => s119538 | DGN FILE => 0112000133md001.dgn | RELATIVE BORDER SCALE IS IN INCHES 0 1 2 3 | UNIT 0042 | PROJECT NUMBER & PHASE 01120001331

Dist	COUNTY	ROUTE	POST MILES TOTAL PROJECT	SHEET No.	TOTAL SHEETS
01	Men	101	3.8, 5.3	28	99

Sheri M. Rodriguez 3-28-16
REGISTERED CIVIL ENGINEER DATE

3-28-16
PLANS APPROVAL DATE

REGISTERED PROFESSIONAL ENGINEER
SHERI M. RODRIGUEZ
No. C66861
Exp. 9-30-16
CIVIL
STATE OF CALIFORNIA

THE STATE OF CALIFORNIA OR ITS OFFICERS OR AGENTS SHALL NOT BE RESPONSIBLE FOR THE ACCURACY OR COMPLETENESS OF SCANNED COPIES OF THIS PLAN SHEET.

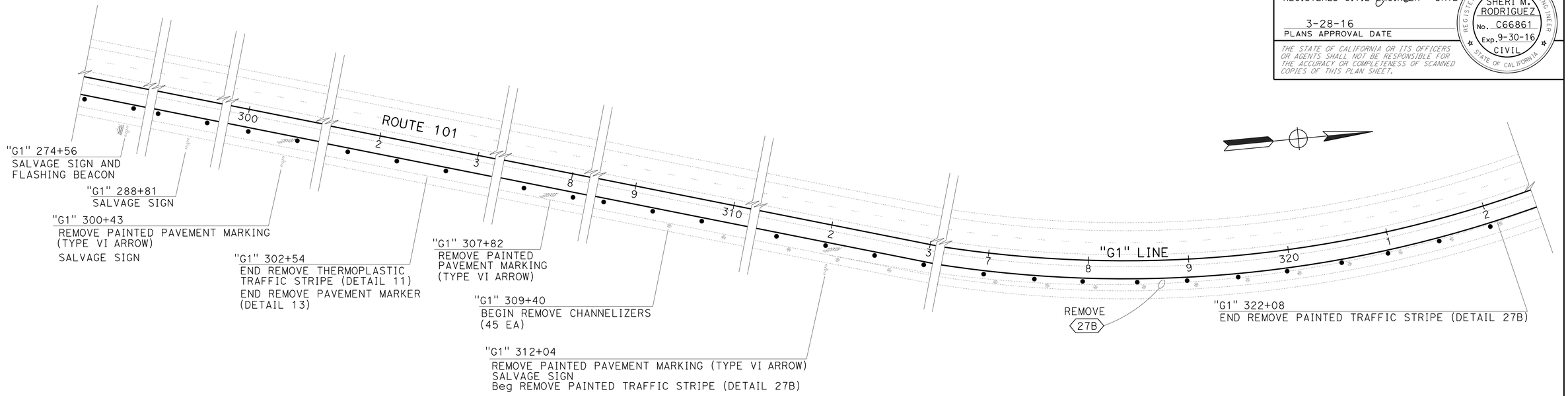

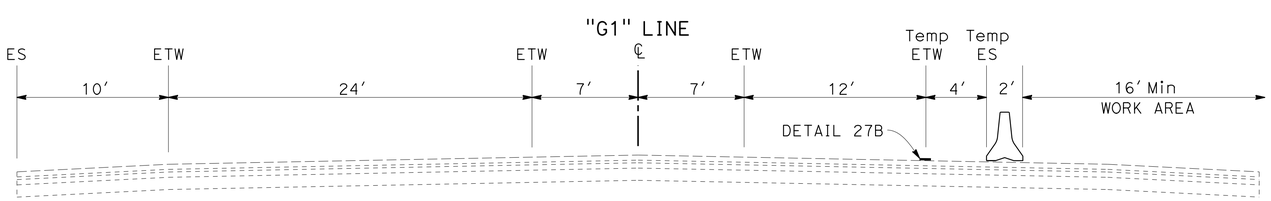

TYPICAL SECTION

PEREGRINE SLIDE

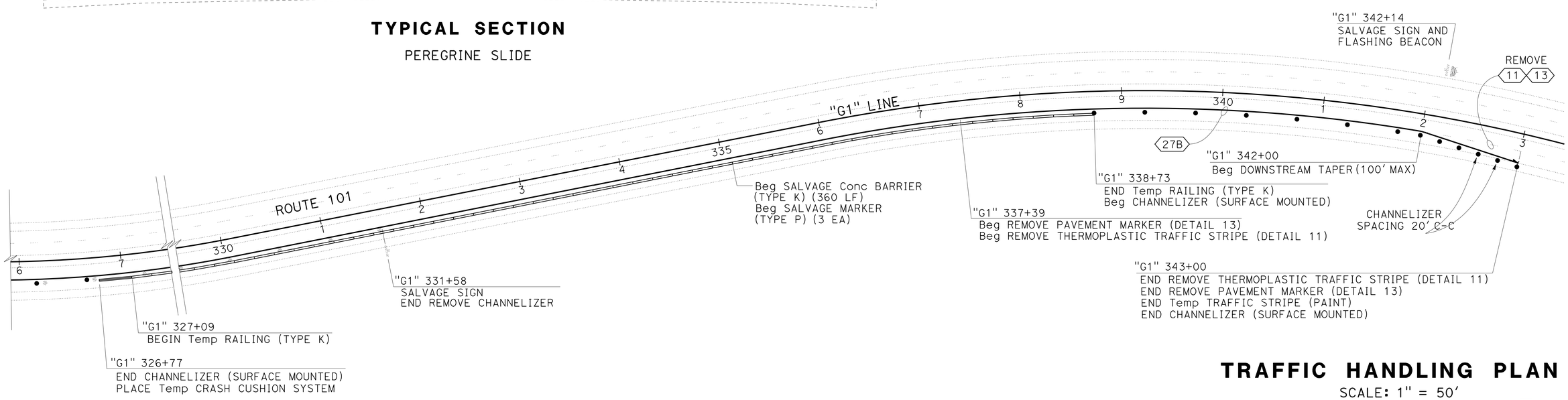

TRAFFIC HANDLING PLAN

SCALE: 1" = 50'

APPROVED FOR TRAFFIC HANDLING INFORMATION ONLY

TH-2

STATE OF CALIFORNIA - DEPARTMENT OF TRANSPORTATION
TRAFFIC OPERATIONS
Caltrans

FUNCTIONAL SUPERVISOR: TROY ARSENEAU
CALCULATED-DESIGNED BY: SHERI M. RODRIGUEZ
CHECKED BY
REVISED BY
DATE REVISED

P:\proj5\01\ob500\drafting\01120001133md002.dgn

LAST REVISION 00-00-00
DATE PLOTTED => 18-APR-2016
TIME PLOTTED => 09:20

Dist	COUNTY	ROUTE	POST MILES TOTAL PROJECT	SHEET No.	TOTAL SHEETS
01	Men	101	3.8, 5.3	29	99

Sheri M. Rodriguez 3-28-16
REGISTERED CIVIL ENGINEER DATE

3-28-16
PLANS APPROVAL DATE

REGISTERED PROFESSIONAL ENGINEER SHERI M. RODRIGUEZ No. C66861 Exp. 9-30-16 CIVIL STATE OF CALIFORNIA

THE STATE OF CALIFORNIA OR ITS OFFICERS OR AGENTS SHALL NOT BE RESPONSIBLE FOR THE ACCURACY OR COMPLETENESS OF SCANNED COPIES OF THIS PLAN SHEET.

SALVAGE SIGNS AND FLASHING BEACONS

LOCATION	ORIENTATION	EA
"G1" 274+56	FNBT	1
"G1" 288+81	FNBT	1
"G1" 300+43	FNBT	1
"G1" 312+04	FNBT	1
"G1" 331+58	FNBT	1
"G1" 342+14	FSBT	1
	TOTAL	6

TRAFFIC CONTROL DEVICES

LOCATION		FLASHING ARROW SIGN	CHANNELIZER (SURFACE MOUNTED) WHITE	Temp RAILING (TYPE K)	Temp CRASH CUSHION	SALVAGE CONCRETE BARRIER (TYPE K)	SALVAGE MARKER (TYPE P)
FROM	TO	EA	EA	LF	EA	LF	EA
"G1" 243+95	"G1" 260+80		34				
"G1" 246+50		1					
"G1" 260+80					1		
"G1" 261+12	"G1" 267+02			580			
"G1" 267+05	"G1" 326+77		122				
"G1" 326+77					1		
"G1" 327+09	"G1" 338+73			1160		360	3
"G1" 338+73	"G1" 343+00		13				
TOTAL		1	169	1740	2	360	3

TEMPORARY PAVEMENT DELINEATION

LOCATION		LENGTH	DETAIL	REMOVE THERMOPLASTIC TRAFFIC STRIPE	REMOVE PAVEMENT MARKER	Temp TRAFFIC STRIPE (PAINT)	REMOVE PAINTED TRAFFIC STRIPE	REMOVE PAINTED PAVEMENT MARKING	REMOVE CHANNELIZERS	REMARKS
FROM	TO	LF		LF	EA	LF	LF	SQFT	EA	
"G1" 243+95, R†	"G1" 302+54, R†	5859	11 & 13	1,464	611					
"G1" 246+55, R†	"G1" 343+00, R†	9645	27B			9,645				
"G1" 246+55, R†	"G1" 261+30, R†	1475	27B				1,475			SEE SHEET PD-1
"G1" 265+40, R†	"G1" 329+00, R†	6360	27B				6,360			SEE SHEET PD-1
"G1" 300+43								42		
"G1" 307+82								42		
"G1" 312+04								42		
"G1" 337+39, R†	"G1" 343+00, R†	561	11 & 13	132	59					
"G1" 309+40, R†	"G1" 331+58, R†								45	SEE SHEET TH-1
"G1" 312+04, R†	"G1" 322+08, R†	1004	27B			930	1,004			SEE SHEET TH-1
"G1" 339+80, R†	"G1" 343+00, R†	1080	27B				1,080			SEE SHEET PD-1
			TOTAL	1,596	670	10,575	9,919	126	45	

TRAFFIC HANDLING QUANTITIES

THQ-1

REVISED BY | DATE REVISED
SHERI M. RODRIGUEZ
CALCULATED-DESIGNED BY | CHECKED BY
FUNCTIONAL SUPERVISOR
TROY ARSENEAU

STATE OF CALIFORNIA - DEPARTMENT OF TRANSPORTATION
Caltrans
TRAFFIC OPERATIONS

P:\proj5\01\0b500\drafting\01120001331mf001.dgn

LAST REVISION 00-00-00 | DATE PLOTTED => 18-APR-2016 | TIME PLOTTED => 09:20

Dist	COUNTY	ROUTE	POST MILES TOTAL PROJECT	SHEET No.	TOTAL SHEETS
01	Men	101	3.8, 5.3	30	99

Sheri M. Rodriguez 3-28-16
REGISTERED CIVIL ENGINEER DATE

3-28-16
PLANS APPROVAL DATE

REGISTERED PROFESSIONAL ENGINEER
SHERI M. RODRIGUEZ
No. C66861
Exp. 9-30-16
CIVIL
STATE OF CALIFORNIA

THE STATE OF CALIFORNIA OR ITS OFFICERS OR AGENTS SHALL NOT BE RESPONSIBLE FOR THE ACCURACY OR COMPLETENESS OF SCANNED COPIES OF THIS PLAN SHEET.

NOTES:

1. EXACT SIGN LOCATION TO BE DETERMINED BY THE ENGINEER.
2. SIGN LOCATION SHALL NOT INTERFERE WITH GATE ACCESS.

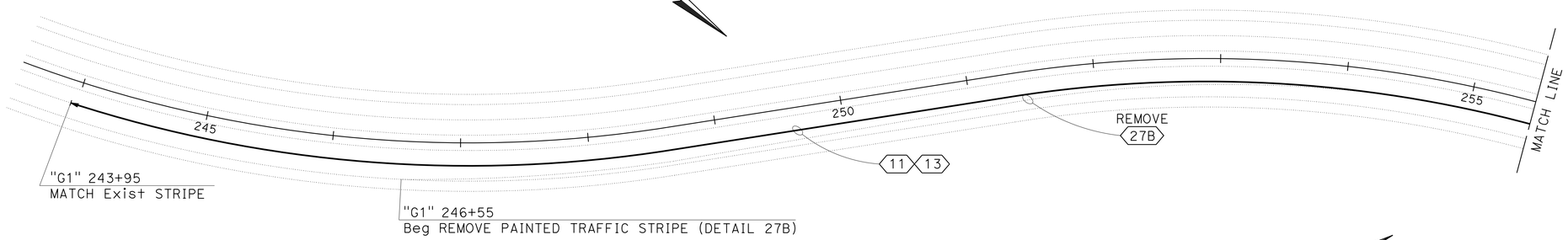

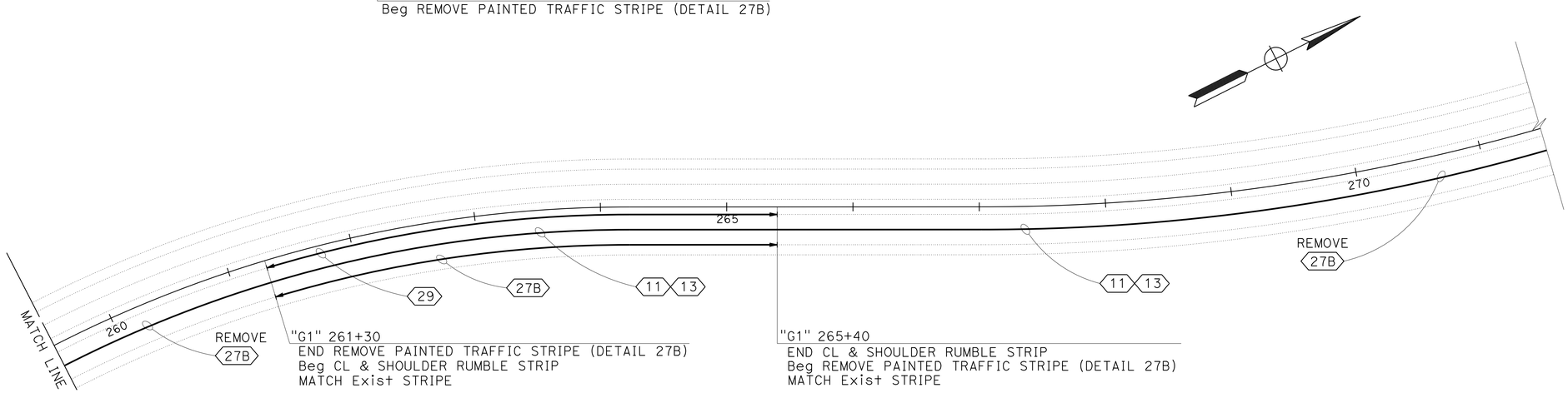

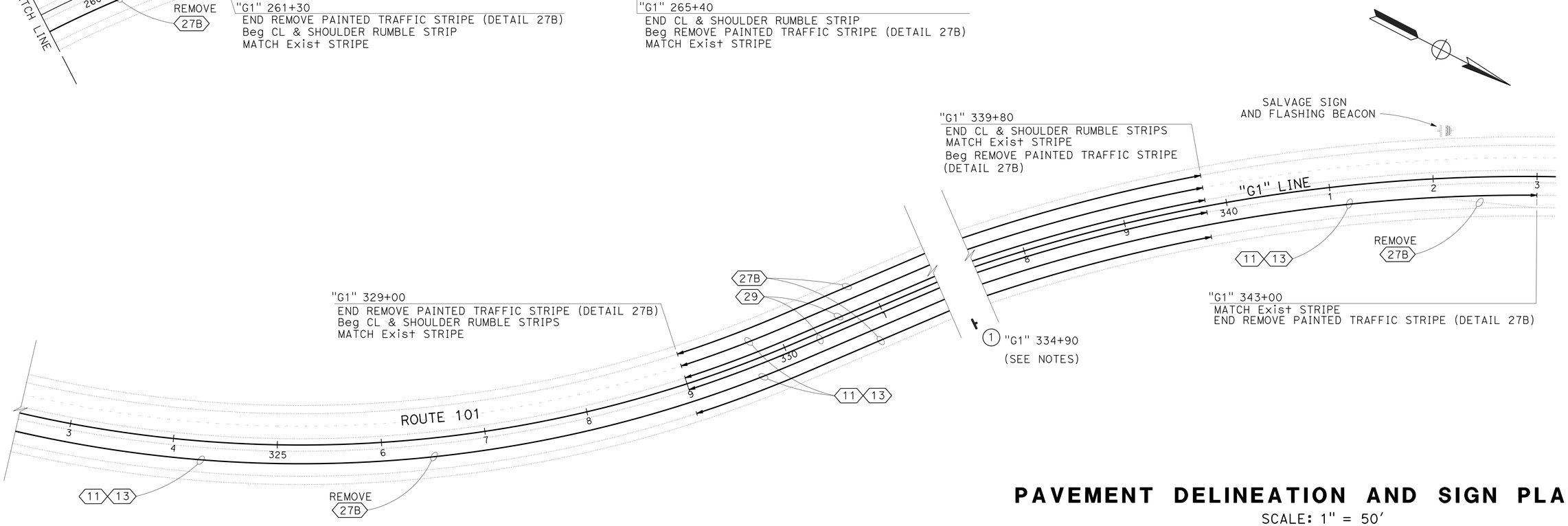

PAVEMENT DELINEATION AND SIGN PLAN

SCALE: 1" = 50'

PD-1

APPROVED FOR PAVEMENT DELINEATION AND SIGN WORK ONLY

REVISED BY | DATE REVISED
SHERI M. RODRIGUEZ
CALCULATED-DESIGNED BY | CHECKED BY
FUNCTIONAL SUPERVISOR
TROY ARSENEAU

STATE OF CALIFORNIA - DEPARTMENT OF TRANSPORTATION
Caltrans
TRAFFIC OPERATIONS

P:\proj5\01\0b500\drafting\0112000133na001.dgn

LAST REVISION 00-00-00 | DATE PLOTTED => 18-APR-2016 | TIME PLOTTED => 09:20

Dist	COUNTY	ROUTE	POST MILES TOTAL PROJECT	SHEET No.	TOTAL SHEETS
01	Men	101	3.8, 5.3	31	99

Sheri M. Rodriguez 3-28-16
REGISTERED CIVIL ENGINEER DATE

3-28-16
PLANS APPROVAL DATE

REGISTERED PROFESSIONAL ENGINEER
SHERI M. RODRIGUEZ
No. C66861
Exp. 9-30-16
CIVIL
STATE OF CALIFORNIA

THE STATE OF CALIFORNIA OR ITS OFFICERS OR AGENTS SHALL NOT BE RESPONSIBLE FOR THE ACCURACY OR COMPLETENESS OF SCANNED COPIES OF THIS PLAN SHEET.

ROADSIDE SIGN - ONE POST

◯	SIGN CODE	SIGN MESSAGE	PANEL SIZE	POST SIZE	No. OF SIGNS
1	R26A(CA)	NO PARKING ANY TIME	24" x 30"	4" x 4"	1
				TOTAL	1

FURNISH SIGNS

SIGN CODE	SIGN MESSAGE	PANEL SIZE	PANEL AREA	No. OF PANELS	BACKGROUND		LEGEND		PROTECTIVE OVERLAY		FURNISH SINGLE SHEET ALUMINUM SIGN (0.063"-UNFRAMED)
					SHEETING COLOR	RETROREFLECTIVE ASTM TYPE	COLOR	RETROREFLECTIVE ASTM TYPE	STANDARD	PREMIUM	
			SQFT								SQFT
R26A(CA)	NO PARKING ANY TIME	24" x 30"	5	1	WHITE	IX	RED	IX		X	5
										TOTAL	5

PAVEMENT DELINEATION

LOCATION		LENGTH	DETAIL	4" THERMOPLASTIC TRAFFIC STRIPE	4" THERMOPLASTIC TRAFFIC STRIPE (BROKEN 36-12)	PAVEMENT MARKERS			CENTERLINE RUMBLE STRIP	SHOULDER RUMBLE STRIP
						(NON-REFLECTIVE)	(RETROREFLECTIVE)		(HMA, GROUND-IN INDENTATIONS)	
							TYPE D	TYPE G		
FROM	TO	LF		LF	LF	EA	EA	EA	STA	STA
"G1" 243+95, R†	"G1" 343+00, R†	9905	11 & 13		9,905	824		207		
"G1" 261+30, R†	"G1" 265+40, R†	410	29	820			18		4.1	
"G1" 261+30, R†	"G1" 265+40, R†	410	27B	410						
"G1" 329+00, R†	"G1" 339+80, R†	1080	27B	1080						10.8
"G1" 329+00	"G1" 339+80	1080	29	4320			92		21.6	
"G1" 329+00, L†	"G1" 339+80, L†	1080	11 & 13		1,080	88		23		
"G1" 329+00, L†	"G1" 339+80, L†	1080	27B	1080						10.8
			SUBTOTAL	7710	10,985	912	110	230	25.7	21.6
			TOTAL	7710	10,985	912	340		25.7	21.6

PAVEMENT DELINEATION AND SIGN QUANTITIES

PDQ-1

REVISED BY | DATE REVISED
SHERI M. RODRIGUEZ
CALCULATED-DESIGNED BY | CHECKED BY
FUNCTIONAL SUPERVISOR
TROY ARSENEAU

STATE OF CALIFORNIA - DEPARTMENT OF TRANSPORTATION
Caltrans
TRAFFIC OPERATIONS

P:\proj5\01\ob500\drafting\01120001 33nc001.dgn

LAST REVISION 00-00-00 | DATE PLOTTED => 18-APR-2016 | TIME PLOTTED => 09:20

Dist	COUNTY	ROUTE	POST MILES TOTAL PROJECT	SHEET No.	TOTAL SHEETS
01	Men	101	3.8, 5.3	32	99

REGISTERED CIVIL ENGINEER 3-28-16 DATE

3-28-16
PLANS APPROVAL DATE

REGISTERED PROFESSIONAL ENGINEER NASIM HASAN No. 74083 Exp. 6-30-17 CIVIL STATE OF CALIFORNIA

THE STATE OF CALIFORNIA OR ITS OFFICERS OR AGENTS SHALL NOT BE RESPONSIBLE FOR THE ACCURACY OR COMPLETENESS OF SCANNED COPIES OF THIS PLAN SHEET.

ROADWAY QUANTITIES

STATION	COLD PLANE ASPHALT CONCRETE PAVEMENT	ROADWAY EXCAVATION	STRUCTURE EXCAVATION	RUBBERIZED HOT MIX ASPHALT (OPEN GRADED)	RUBBERIZED HOT MIX ASPHALT (GAP GRADED)	HOT MIX ASPHALT (TYPE A)	MINOR HOT MIX ASPHALT	ASPHALT TREATED PERMEABLE BASE	CLASS 2 AGGREGATE BASE	TACK COAT	SHOULDER BACKING	(N) EMBANKMENT	REMOVE FENCE	FENCE (TYPE WM AND BW)	CABLE RAILING	16' METAL GATE	MINOR CONCRETE (CURB)	IMPORTED BORROW
	SQYD	CY	CY	TON	TON	TON	TON	CY	CY	TON	TON	CY	LF	LF	LF	EA	CY	CY
"G1" 261+30 TO 265+40		1,335.9	2,505.0	95.9	230.2	436.4		112.5	837.3	1		79.7						
"G1" 325+40 TO 326+60	911.1											281.3						
"G1" 329+00 TO 330+00	2,505.6			51.3	123.0					0.2								
"G1" 330+00 TO 332+75				140.9	338.3	405.9				1.3		500.0						
"G1" 332+75 TO 337+80		3,539.7	18,594.3	258.9	621.3	1,049.4		290.0	2,271.2	2.1		7,035						1427.9
"G1" 262+48.06 TO 265+51.10													292	306				
"G1" 329+95.37 TO 341+51.82													922	1,520				
"G1" 333+12.30 TO 336+89.15															379	1		
"G1" 333+05.95 TO 336+88.84						20.40			684.6									
"G1" 333+53.23 TO 336+38.10																	8.70	
"G1" 333+66.13 TO 336+49.70											16.8							
HMA DIKE							16.0											
SAFETY EDGE					3.79	16.99			29.9									
TOTAL	3,416.7	4,875.6	21,099.3	547.0	1,316.59	1,929.09	16.0	402.5	3,823	4.6	16.8		1,214	1,826	379	1	8.70	1427.9

(N) - NOT A SEPARATE PAY ITEM, FOR INFORMATION ONLY

HORIZONTAL AND UNDERDRAIN QUANTITIES

SHEET No.	STATION	DRILL HOLE (HORIZONTAL DRAIN)	FURNISH AND INSTALL DRAIN PIPE (HORIZONTAL DRIAN)	8" WELDED STEEL PIPE (.134 THICK)	12" COLLECTOR SYSTEM (HORIZONTAL DRAIN AND GEOTEXTILE WALL DRAIN)	8" PLASTIC PIPE	8" PERFORATED PLASTIC PIPE UNDERDRAIN	(N) CLASS 1 PERMEABLE MATERIAL (BLANKET)	(N) DITCH EXCAVATION	DESCRIPTION
		LF	LF	LF	LF	LF	LF	CY	CY	
C1	"G1" 262+65 TO 265+82	3,000	3,040	300	305					
C1	"G1" 333+62 TO 336+47	5,250	5,292	315	281					HORIZONTAL DRAIN
C2	"G1" 262+42.14 TO 265+82.04					10	326.4	193.6	242.0	UNDERDRAIN, UD-1
C2	"G1" 333+65 TO 336+49					10	279.9	168.2	210.3	UNDERDRAIN, UD-2
C2	"G1" 332+95.31 TO 336+76.30					20	372.6	206.9	276.1	UNDERDRAIN, UD-3
TOTAL		8,250	8,332	615	586	40	978.9			

(N) - NOT A SEPARATE PAY ITEM, FOR INFORMATION ONLY

PLACE HMA DIKE

STATION	SIDE R+/L+	PLACE HMA DIKE (TYPE E) LF	MINOR HMA TON
"G1" 261+30 TO "G1" 265+40	R+	398.45	9.2
"G1" 329+00 TO "G1" 331+98.70	L+	294.83	6.8
TOTAL		693.28	16.0*

* FOR TOTAL QUANTITIES, SEE ROADWAY QUANTITIES

SAFETY EDGE

STATION	SIDE R+/L+	RHMA-G TON	HMA-A TON
"G1" 329+00 TO "G1" 330+00	R+	0.26	
"G1" 330+00 TO "G1" 332+75	R+	0.71	2.74
"G1" 331+98.70 TO "G1" 332+75	L+	0.20	0.76
"G1" 332+75 TO "G1" 337+80	R+/L+	2.62	13.49
TOTAL		3.79**	16.99**

** FOR TOTAL QUANTITIES, SEE ROADWAY QUANTITIES

SUMMARY OF QUANTITIES

Q-1

STATE OF CALIFORNIA - DEPARTMENT OF TRANSPORTATION
Caltrans 03-DESIGN

FUNCTIONAL SUPERVISOR: ALI KIANI
CALCULATED-DESIGNED BY: NASIM HASAN
CHECKED BY: SATISH PRAKASH
REVISED BY / DATE REVISED

LAST REVISION 00-00-00
DATE PLOTTED => 18-APR-2016
TIME PLOTTED => 09:20

Dist	COUNTY	ROUTE	POST MILES TOTAL PROJECT	SHEET No.	TOTAL SHEETS
01	Men	101	3.8, 5.3	33	99

REGISTERED CIVIL ENGINEER 3-28-16 DATE

3-28-16
PLANS APPROVAL DATE

REGISTERED PROFESSIONAL ENGINEER NASIM HASAN No. 74083 Exp. 6-30-17 CIVIL STATE OF CALIFORNIA

THE STATE OF CALIFORNIA OR ITS OFFICERS OR AGENTS SHALL NOT BE RESPONSIBLE FOR THE ACCURACY OR COMPLETENESS OF SCANNED COPIES OF THIS PLAN SHEET.

WATER POLLUTION CONTROL

BMP	UNIT	* QUANTITY
TEMPORARY CONSTRUCTION ENTRANCE/EXIT	EA	2
TEMPORARY FIBER ROLL (6")	LF	3,820
TEMPORARY SILT FENCE	LF	355
TEMPORARY REINFORCED SILT FENCE	LF	40
TEMPORARY CHECK DAM	LF	405
TEMPORARY GRAVEL BAG BERM	LF	3,520
TEMPORARY DRAINAGE INLET PROTECTION	EA	6
TEMPORARY CLEAR WATER DIVERSION	EA	2
MOVE-IN/MOVE OUT (TEMPORARY EROSION CONTROL)	EA	4
TEMPORARY COVER	SQYD	6,040
RECP (JUTE MESH)	SQYD	1,765

* EXACT QUANTITIES AND LOCATIONS TO BE DETERMINED BY STROM WATER POLLUTION CONTROL PLAN

BERM WALL

STATION	STRUCTURAL CONCRETE, SOUND WALL	BAR REINFORCING STEEL (SOUND WALL)	SOUND WALL (MASONRY BLOCK)	(N) STRUCTURE EXCAVATION
	CY	LB	SQFT	CY
"G1" 333+12.30 TO 336+89.15	39.66	6,686.3	1666.0	64.5
TOTAL	39.66	6,686.3	1666.0	

(N) - NOT A SEPARATE PAY ITEM, FOR INFORMATION ONLY

DESTROY WELL

STATION	SIDE R†/L†	OFFSET	TOP OF PIPE ELEVATION	DESTROY WELL EA
"G1" 263+98.88	R†	160.71	469.32	1
"G1" 264+15.37	R†	188.21	474.06	1
"G1" 264+51.78	R†	132.20	465.11	1
"G1" 264+56.10	R†	145.64	466.66	1
"G1" 264+93.22	R†	131.32	463.93	1
"G1" 264+55.67	R†	139.98	466.24	1
"G1" 264+95.14	R†	136.18	464.39	1
			TOTAL	7

TEMPORARY FENCE (TYPE ESA)

STATION	Q†y	UNIT	R†/L†
"G1" 263+96.72 TO "G1" 264+71.52	200	LF	R†
TOTAL	200	LF	

SUMMARY OF QUANTITIES

Q-2

REVISED BY | DATE REVISED
NASIM HASAN
CALCULATED-DESIGNED BY | CHECKED BY
FUNCTIONAL SUPERVISOR
ALI KIANI
STATE OF CALIFORNIA - DEPARTMENT OF TRANSPORTATION
Caltrans 03-DESIGN

LAST REVISION 00-00-00 | DATE PLOTTED => 18-APR-2016 | TIME PLOTTED => 09:20

Dist	COUNTY	ROUTE	POST MILES TOTAL PROJECT	SHEET No.	TOTAL SHEETS
01	Men	101	3.8, 5.3	34	99

Laura Lazzarotto
LICENSED LANDSCAPE ARCHITECT

3-28-16
PLANS APPROVAL DATE

LICENSED LANDSCAPE ARCHITECT
Laura Lazzarotto
Signature
8-31-17
Renewal Date
3-28-16
Date
STATE OF CALIFORNIA

THE STATE OF CALIFORNIA OR ITS OFFICERS OR AGENTS SHALL NOT BE RESPONSIBLE FOR THE ACCURACY OR COMPLETENESS OF SCANNED COPIES OF THIS PLAN SHEET.

EROSION CONTROL TYPE 1

SEQUENCE	ITEM	MATERIAL		APPLICATION RATE
		DESCRIPTION	TYPE	
STEP 1	HYDROSEED	SEED	MIX 1	174 LB/ACRE
		FIBER	WOOD	1100 LB/ACRE
		COMPOST	MEDIUM	270 CY/ACRE
STEP 2	STRAW	STRAW	WHEAT &/OR BARLEY	2 TON/ACRE
STEP 3	HYDROMULCH	FIBER	WOOD	1100 LB/ACRE
		TACKIFIER	PSYLLIUM	140 LB/ACRE
		COMPOST	MEDIUM	270 CY/ACRE

EROSION CONTROL TYPE 2

SEQUENCE	ITEM	MATERIAL		APPLICATION RATE	REMARKS
		DESCRIPTION	TYPE		
STEP 1	IMPORTED TOPSOIL	IMPORTED TOPSOIL		810 CY/ACRE	
STEP 2	COMPOST	COMPOST	COARSE	540 CY/ACRE	
STEP 3	INCORPORATE MATERIALS	COMPOST/ IMPORTED TOPSOIL			12" DEPTH
STEP 4	FIBER ROLLS	FIBER ROLL	TYPE B 8" TO 10" Dia		Type 1 Fiber Roll Installation
STEP 5	HYDROSEED	SEED	MIX 1	174 LB/ACRE	
		FIBER	WOOD	1200 LB/ACRE	
STEP 6	STRAW	STRAW	WHEAT &/OR BARLEY	2 TON/ACRE	
STEP 7	HYDROMULCH	FIBER	WOOD	1000 LB/ACRE	
		TACKIFIER	PSYLLIUM	150 LB/ACRE	

EROSION CONTROL TYPE 3

SEQUENCE	ITEM	MATERIAL		APPLICATION RATE
		DESCRIPTION	TYPE	
STEP 1	WOOD MULCH	BARK	SHREDDED REDWOOD	405 CY/ACRE

EROSION CONTROL TYPE 4

SEQUENCE	ITEM	MATERIAL		APPLICATION RATE	REMARKS
		DESCRIPTION	TYPE		
STEP 1	ROLLED EROSION CONTROL PRODUCT (NETTING)	COIR NETTING	TYPE B	43,560 SQFT/AC	
STEP 2	BONDED FIBER MATRIX	SEED	SEED MIX 1	174 LB/ACRE	APPLICATION RATE IS FOR FIBER & TACKIFIER COMBINED
		FIBER		1000 LB/ACRE	
		TACKIFIER			
STEP 3	BONDED FIBER MATRIX	FIBER		3500 LB/ACRE	
		TACKIFIER			

FIBER ROLLS

SEQUENCE	ITEM	MATERIAL		REMARKS
		DESCRIPTION	TYPE	
FIBER ROLLS MUST BE INSTALLED BEFORE EROSION CONTROL	FIBER ROLLS	FIBER ROLL	TYPE B 8" TO 10" Dia	TYPE 1 FIBER ROLL INSTALLATION

BIOSWALE

ITEM	MATERIAL		APPLICATION RATE	REMARKS
	DESCRIPTION	TYPE		
INCORPORATE MATERIALS	COMPOST	COARSE	540 CY/ACRE	12" DEPTH

EROSION CONTROL TYPE 5

SEQUENCE	ITEM	MATERIAL		APPLICATION RATE	REMARKS
		DESCRIPTION	TYPE		
STEP 1	ROLLED EROSION CONTROL PRODUCT (NETTING)	COIR NETTING	TYPE C	43,560 SQFT/AC	
STEP 2	HYDROSEED	SEED	SEED MIX 1	174 LB/ACRE	
		FIBER	WOOD	1200 LB/ACRE	
STEP 3	HYDROMULCH	FIBER	WOOD	1000 LB/ACRE	
		TACKIFIER	PSYLLIUM	150 LB/ACRE	

SEED MIX 1

SEED	BOTANICAL NAME (COMMON NAME)	PERCENT GERMINATION (MINIMUM)	POUNDS PURE LIVE SEED PER ACRE (SLOPE MEASUREMENT)
MIX 1	ARTEMISIA DOUGLASIANA[1] (MUGWORT)	25	2
	BACCHARIS PILULARIS[1] (COYOTE BRUSH)	20	2
	BROMUS CARINATUS[1] (CALIFORNIA BROME)	45	25
	ELYMUS ELYMOIDES[1] (BOTTLEBRUSH SQUIRRELTAIL)	55	15
	ELYMUS GLAUCUS, BERKELEY[1] (BLUE WILDRYE, BERKELEY)	55	25
	FESTUCA IDAHOENSIS[1] (IDAHO FESCUE)	65	12
	HORDEUM VULGARE (COMMON BARLEY)	75	70
	ACMISPON AMERICANUS[1] (PURSHING'S LOTUS)	45	12
	NASSELLA PULCHRA, DEAWNED[1] (PURPLE NEEDLEGRASS)	45	4
	VULPIA MICROSTACHYS[1] (SMALL FESCUE)	45	4

[1]SEED PRODUCED IN CALIFORNIA ONLY.

LEGEND

- EC TYPE 1
- EC TYPE 2
- EC TYPE 3
- EC TYPE 4
- EC TYPE 5

EROSION CONTROL LEGEND
ECL-1

REVISED BY | DATE REVISED
LAURA LAZZAROTTO | PATRICK SULLIVAN
CALCULATED-DESIGNED BY | CHECKED BY
FUNCTIONAL SENIOR | TIM BOESE

STATE OF CALIFORNIA - DEPARTMENT OF TRANSPORTATION
Caltrans
LANDSCAPE

P:\proj5\01\0b500\drafting\0112000133tc001.dgn

LAST REVISION 01-30-14 | DATE PLOTTED => 18-APR-2016 | TIME PLOTTED => 13:18

Dist	COUNTY	ROUTE	POST MILES TOTAL PROJECT	SHEET No.	TOTAL SHEETS
01	Men	101	3.8, 5.3	35	99

Laura Lazzarotto
LICENSED LANDSCAPE ARCHITECT

3-28-16
PLANS APPROVAL DATE

LICENSED LANDSCAPE ARCHITECT
Laura Lazzarotto
Signature
8-31-17
Expiration Date
3-28-16
Date
STATE OF CALIFORNIA

THE STATE OF CALIFORNIA OR ITS OFFICERS OR AGENTS SHALL NOT BE RESPONSIBLE FOR THE ACCURACY OR COMPLETENESS OF SCANNED COPIES OF THIS PLAN SHEET.

NOTES:

FOR ACCURATE RIGHT OF WAY DATA, CONTACT
RIGHT OF WAY ENGINEERING AT THE DISTRICT OFFICE

LEGEND:

EC TYPE 1

EC TYPE 5

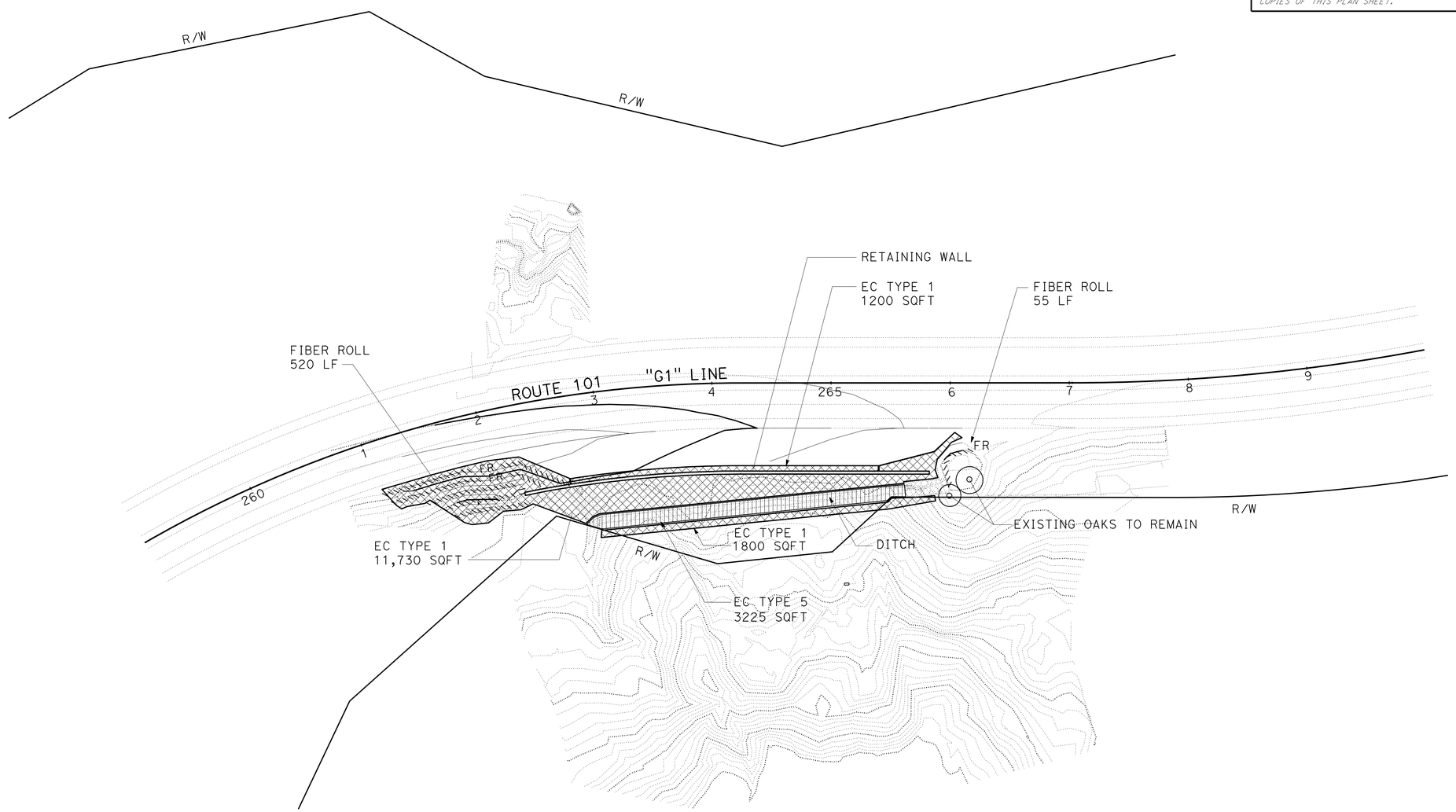

EROSION CONTROL PLAN

SCALE: 1" = 50'

EC-1

STATE OF CALIFORNIA - DEPARTMENT OF TRANSPORTATION
Caltrans
LANDSCAPE

FUNCTIONAL SENIOR: TIM BOESE
CALCULATED-DESIGNED BY: LAURA LAZZAROTTO
CHECKED BY: PATRICK SULLIVAN
REVISED BY
DATE REVISED

LAST REVISION 00-00-00
DATE PLOTTED => 18-APR-2016
TIME PLOTTED => 09:20

Dist	COUNTY	ROUTE	POST MILES TOTAL PROJECT	SHEET No.	TOTAL SHEETS
01	Men	101	3.8, 5.3	36	99

Laura Lazzarotto
LICENSED LANDSCAPE ARCHITECT

3-28-16
PLANS APPROVAL DATE

LICENSED LANDSCAPE ARCHITECT
Laura Lazzarotto
Signature
8-31-17
Renewal Date
3-28-16
Date
STATE OF CALIFORNIA

THE STATE OF CALIFORNIA OR ITS OFFICERS OR AGENTS SHALL NOT BE RESPONSIBLE FOR THE ACCURACY OR COMPLETENESS OF SCANNED COPIES OF THIS PLAN SHEET.

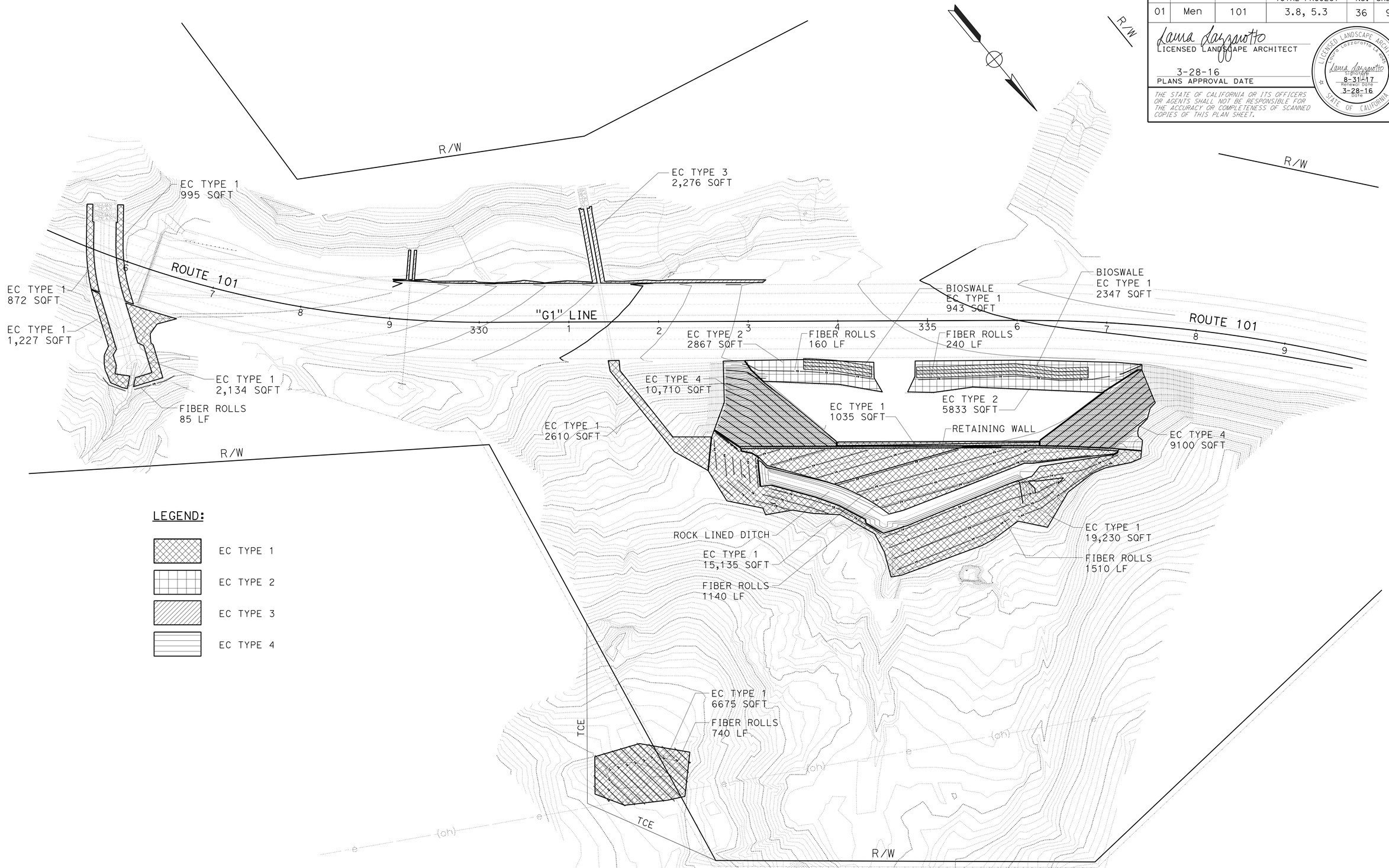

EROSION CONTROL PLAN

SCALE: 1" = 50'

EC-2

STATE OF CALIFORNIA - DEPARTMENT OF TRANSPORTATION
Caltrans
LANDSCAPE

FUNCTIONAL SUPERVISOR: TIM BOESE
CALCULATED-DESIGNED BY: LAURA LAZZAROTTO
CHECKED BY: PATRICK SULLIVAN
REVISED BY
DATE REVISED

LAST REVISION 00-00-00
DATE PLOTTED => 18-APR-2016
TIME PLOTTED => 09:20

BORDER LAST REVISED 7/2/2010
USERNAME => s119538
DGN FILE => 0112000133te002.dgn
RELATIVE BORDER SCALE IS IN INCHES 0 1 2 3
UNIT 0314
PROJECT NUMBER & PHASE 01120001331

Dist	COUNTY	ROUTE	POST MILES TOTAL PROJECT	SHEET No.	TOTAL SHEETS
01	Men	101	3.8, 5.3	37	99

Laura Lazzarotto
LICENSED LANDSCAPE ARCHITECT

3-28-16
PLANS APPROVAL DATE

LICENSED LANDSCAPE ARCHITECT
Laura Lazzarotto
Signature
8-31-17
Renewal Date
3-28-16
Date
STATE OF CALIFORNIA

THE STATE OF CALIFORNIA OR ITS OFFICERS OR AGENTS SHALL NOT BE RESPONSIBLE FOR THE ACCURACY OR COMPLETENESS OF SCANNED COPIES OF THIS PLAN SHEET.

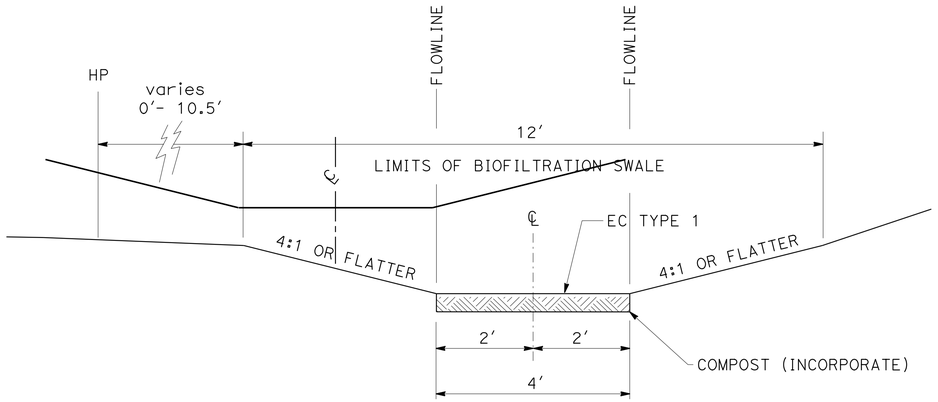

SECTION (Typ)
NO SCALE

BIOFILTRATION SWALES

SHEET	LOCATION		LENGTH (LF)
	STATION "G1" LINE		
EC-3	BS1	333+64.00 TO 334+40.00	77.00
	BS2	334+90.00 TO 336+81.63	191.63

LEGEND

AREA OF BIOFILTRATION SWALE

BS BIOFILTRATION SWALE

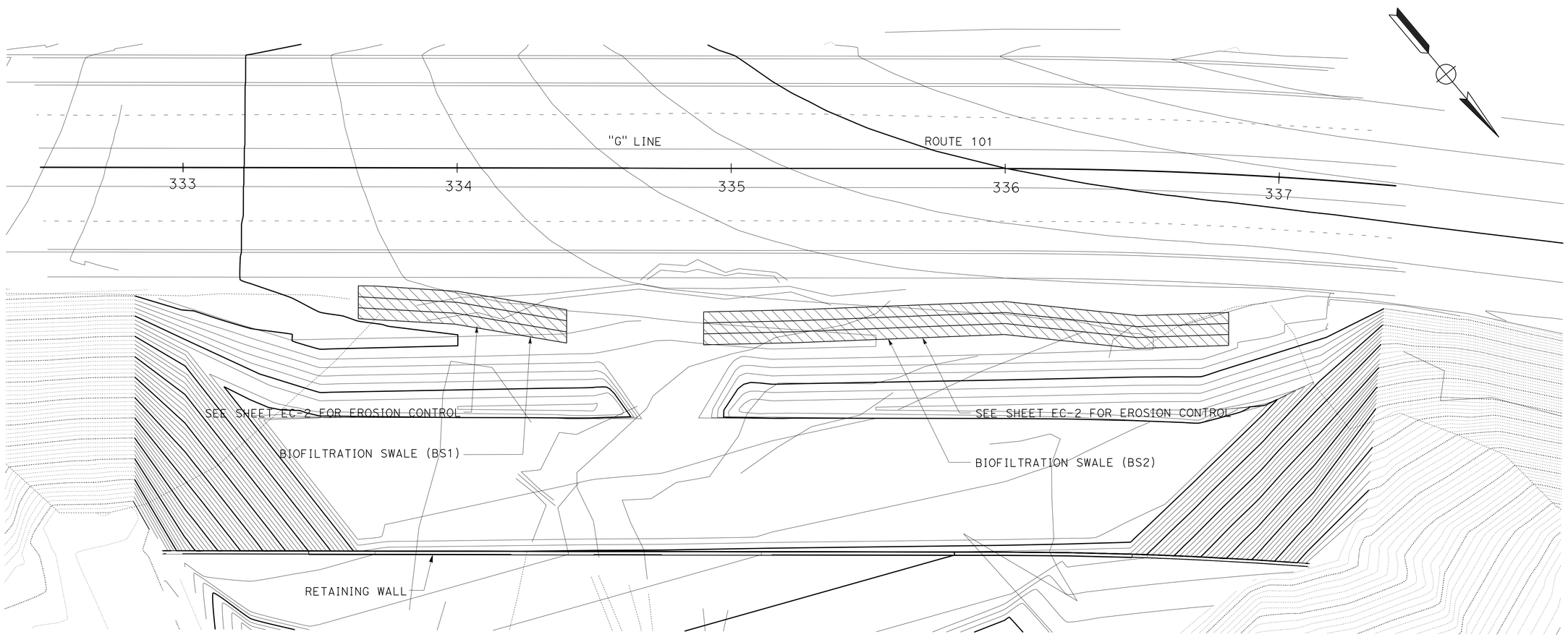

BIOFILTRATION SWALE

SCALE: 1"=20'

EROSION CONTROL PLAN AND DETAIL

SCALE: 1" = 20'

EC-3

STATE OF CALIFORNIA - DEPARTMENT OF TRANSPORTATION
Caltrans
LANDSCAPE

FUNCTIONAL SENIOR: TIM BOESE
CALCULATED-DESIGNED BY: LAURA LAZZAROTTO
CHECKED BY: PATRICK SULLIVAN
REVISED BY
DATE REVISED

LAST REVISION 00-00-00
DATE PLOTTED => 18-APR-2016
TIME PLOTTED => 09:20

Dist	COUNTY	ROUTE	POST MILES TOTAL PROJECT	SHEET No.	TOTAL SHEETS
01	Men	101	3.8, 5.3	38	99

Laura Lazzarotto
LICENSED LANDSCAPE ARCHITECT

3-28-16
PLANS APPROVAL DATE

LICENSED LANDSCAPE ARCHITECT
Laura Lazzarotto
Signature
8-31-17
Renewal Date
3-28-16
Date
STATE OF CALIFORNIA

THE STATE OF CALIFORNIA OR ITS OFFICERS OR AGENTS SHALL NOT BE RESPONSIBLE FOR THE ACCURACY OR COMPLETENESS OF SCANNED COPIES OF THIS PLAN SHEET.

EROSION CONTROL QUANTITIES

SHEET	LOCATION	LT	RT	EROSION CONTROL TYPE	FIBER ROLLS LF	IMPORTED TOPSOIL CY	COMPOST SQFT	INCORPORATE MATERIALS SQFT	HYDROSEED SQFT	STRAW SQFT	HYDROMULCH SQFT	WOOD MULCH CY	EROSION CONTROL (BONDED FIBER MATRIX) SQFT	ROLLED EROSION CONTROL PRODUCT (NETTING) SQFT
EC-1	PM 3.7		X	TYPE 1					14,730	14,730	14,730			
			X	FIBER ROLL	575									
				TYPE 5					3225		3225			3225
EC-2	PM 4.95	X	X	TYPE 1					5228	5228	5228			
			X	FIBER ROLL	85									
EC-2	PM 5.3		X	TYPE 1					31,085	31,085	31,085			
			X	TYPE 2		222	11,990	11,990	11,990	11,990	11,990			
		X		TYPE 3								9		
			X	TYPE 4									19,810	19,810
			X	FIBER ROLL	3875									
EC-3	PM 5.3		X	BIOSWALE			3290	3290						
TOTAL					4535	222	15,280	15,280	66,528	63,303	66,528	9	19,810	23,035

STATE OF CALIFORNIA - DEPARTMENT OF TRANSPORTATION
Caltrans
LANDSCAPE

FUNCTIONAL SENIOR: TIM BOESE
CALCULATED-DESIGNED BY: LAURA LAZZAROTTO
CHECKED BY: PATRICK SULLIVAN
REVISED BY
DATE REVISED

EROSION CONTROL QUANTITIES
ECQ-1

LAST REVISION 00-00-00
DATE PLOTTED => 18-APR-2016
TIME PLOTTED => 09:20

Dist	COUNTY	ROUTE	POST MILES TOTAL PROJECT	SHEET No.	TOTAL SHEETS
01	Men	101	3.8, 5.3	39	99

Laura Lazzarotto
LICENSED LANDSCAPE ARCHITECT

3-28-16
PLANS APPROVAL DATE

LICENSED LANDSCAPE ARCHITECT
Laura Lazzarotto
Signature
8-31-17
Renewal date
3-28-16
Date
STATE OF CALIFORNIA

THE STATE OF CALIFORNIA OR ITS OFFICERS OR AGENTS SHALL NOT BE RESPONSIBLE FOR THE ACCURACY OR COMPLETENESS OF SCANNED COPIES OF THIS PLAN SHEET.

NOTES:

1. FOR ACCURATE RIGHT OF WAY DATA, CONTACT RIGHT OF WAY ENGINEERING AT THE DISTRICT OFFICE.
2. UNDERLINED PORTIONS OF BOTANICAL NAME INDICATE ABBREVIATIONS USED ON PLANTING PLANS.

APPLICABLE WHEN CIRCLED:

1 - QUANTITIES SHOWN ARE "PER PLANT" UNLESS SHOWN AS SQFT OR SQYD APPLICATION RATES
2 - BASIN MULCH IS INCLUDED WITH MULCH QUANTITIES SHOWN ON PLANTING PLAN
3 - SUFFICIENT TO RECEIVE ROOT BALL AND AMENDMENTS IF REQUIRED
4 - SEE DETAIL
5 - SEE SPECIAL PROVISIONS
6 - SEE STANDARD SPECIFICATIONS
7 - AS SHOWN ON PLANS
8 - UNLESS OTHERWISE SHOWN ON PLANS
9 - FOLIAGE PROTECTOR REQUIRED
10 - ROOT PROTECTOR REQUIRED
11 - ROOT BARRIER REQUIRED
12 - STATE-FURNISHED

PLANT LIST AND PLANTING SPECIFICATIONS

PLANT GROUP	PLANT No.	SYMBOL	BOTANICAL NAME	COMMON NAME	SIZE	QUANTITY EACH	HOLE SIZE (INCH) Dia	HOLE SIZE (INCH) DEPTH	BASIN TYPE	IRON SULFATE 1	SOIL AMEND 1	COMMERCIAL FERTILIZER 1 PLANTING	COMMERCIAL FERTILIZER 1 PLT ESTB	BASIN MULCH (CY)	STAKING	PLANTING LIMITS MINIMUM DISTANCE (ft) FROM ETW	Pvmt	FENCE	WALL	PAVED DITCH	EARTH DITCH	ON CENTER (ft)	REMARKS
A	1		BACCHARIS PILULARIS	COYOTE BRUSH	No. 1	69	8	10	II	—	0.07	0.02	0.02	0.03	—	12	—	—	—	—	—	7	SHRUB
	2		CERCOCARPUS BETULOIDES	MOUNTAIN MAHOGANY	No. 1	43	8	10	II	—	0.07	0.02	0.02	0.03	—	12	—	—	—	—	—	7	SHRUB
	3		MIMULUS AURANTIACUS	STICKY MONKEYFLOWER	No. 1	46	8	10	II	—	0.07	0.02	0.02	0.03	—	12	—	—	—	—	—	7	SHRUB
B	4		CEANOTHUS THYRISIFLORUS	BLUE BLOSSOM	No. 5	37	10	15	II	—	0.20	0.02	0.02	0.03	—	12	—	—	—	—	—	7	SHRUB
	5		HETEROMELES ARBUTIFOLIA	TOYON	No. 5	26	10	15	II	—	0.20	0.02	0.02	0.03	—	12	—	—	—	—	—	7	SHRUB
U	6		QUERCUS LOBATA	VALLEY OAK	No. 15	19	22	22	II	—	1.0	0.02	0.02	0.045	7	30	—	—	—	—	—	7	TREE
	7		QUERCUS WISLIZENII	INTERIOR LIVE OAK	No. 15	19	22	22	II	—	1.0	0.02	0.02	0.045	7	30	—	—	—	—	—	7	TREE

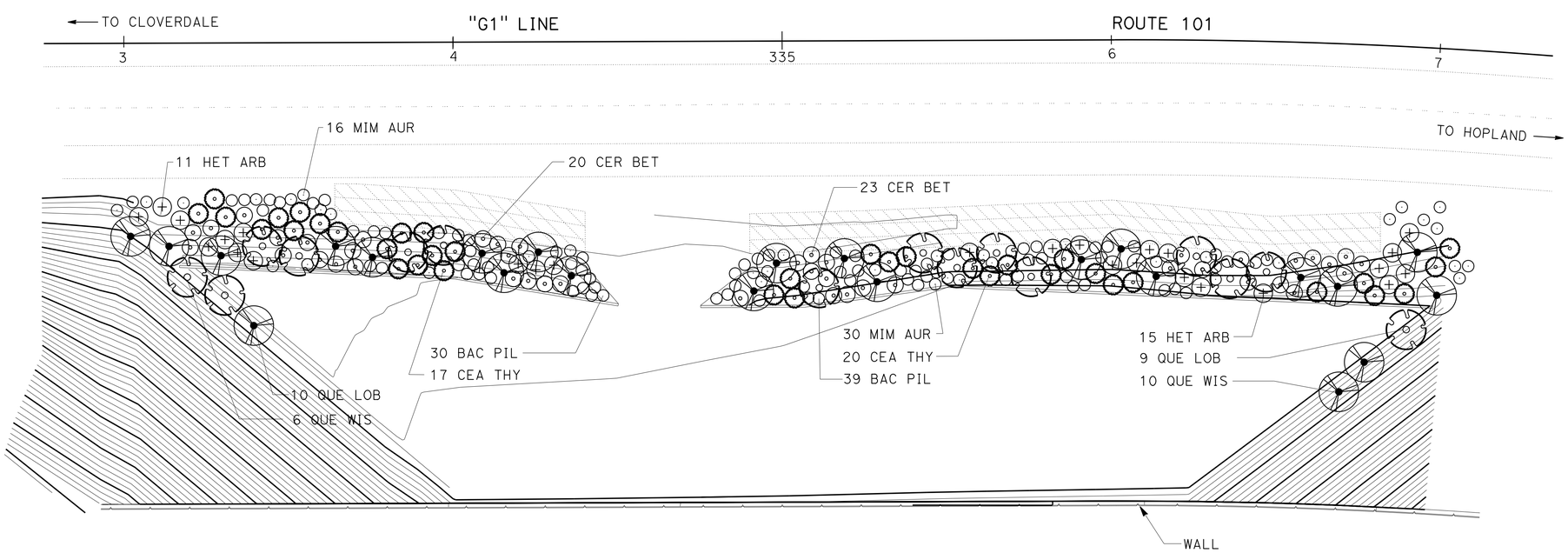

PLANT LIST AND PLANTING PLAN

SCALE: 1"=20'

PL-1

REVISED BY | DATE REVISED
LAURA LAZZAROTTO | PATRICK SULLIVAN
CALCULATED-DESIGNED BY | CHECKED BY
FUNCTIONAL SENIOR | TIM BOESE

STATE OF CALIFORNIA - DEPARTMENT OF TRANSPORTATION
Caltrans
LANDSCAPE

LAST REVISION 00-00-00 | DATE PLOTTED => 18-APR-2016 | TIME PLOTTED => 09:20

Dist	COUNTY	ROUTE	POST MILES TOTAL PROJECT	SHEET No.	TOTAL SHEETS
01	Men	101	3.8, 5.3	40	99

Laura Lazzarotto
LICENSED LANDSCAPE ARCHITECT

3-28-16
PLANS APPROVAL DATE

LICENSED LANDSCAPE ARCHITECT
Laura Lazzarotto
Signature
8-31-17
Renewal Date
3-28-16
Date
STATE OF CALIFORNIA

THE STATE OF CALIFORNIA OR ITS OFFICERS OR AGENTS SHALL NOT BE RESPONSIBLE FOR THE ACCURACY OR COMPLETENESS OF SCANNED COPIES OF THIS PLAN SHEET.

NOTES:

1. FOR ACCURATE RIGHT OF WAY DATA, CONTACT RIGHT OF WAY ENGINEERING AT THE DISTRICT OFFICE.
2. No. 1 SHRUBS TO HAVE 2 BUBBLERS, No. 5 SHRUBS TO HAVE 3 BUBBLERS EACH, No. 15 TREES TO HAVE 4 BUBBLERS EACH.

IRRIGATION LEGEND

- LOW PRESSURE LAYFLAT HOSE
- POLYETHYLENE DRIP PIPE
- WYE STRAINER IN PLASTIC IRRIGAT. BOX

NOTE:
ALL PLANTS TO RECEIVE .25 GPM TRICKLE FLOOD BUBBLER

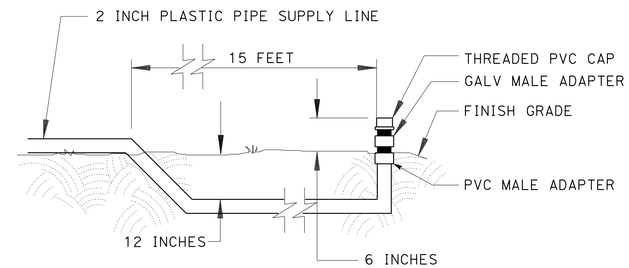

WATER TRUCK COUPLER
DETAIL NO SCALE

IRRIGATION QUANTITIES

ITEM	TYPE	TOTAL
2" WYE STRAINER ASSEMBLY		2
TRUCK STANDPIPE		2
5/8" DRIP IRRIGATION TUBING		1930
RISER SPRINKLER ASSEMBLY	RISER TYPE V	660
2" PLASTIC PIPE SCHEDULE 40 (SUPPLY LINE)		180

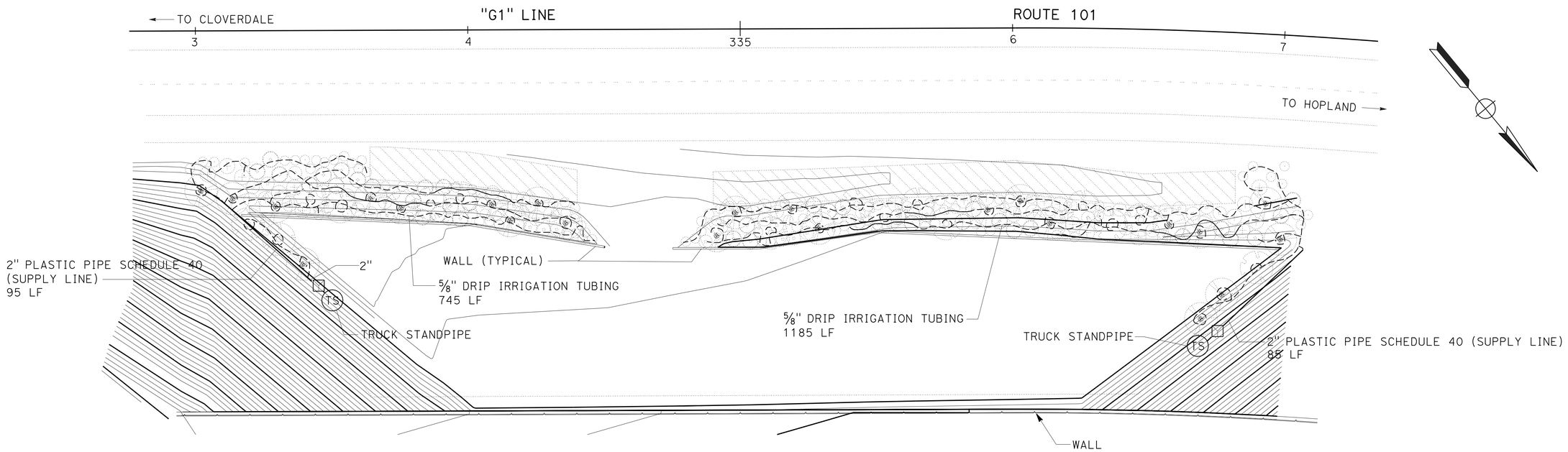

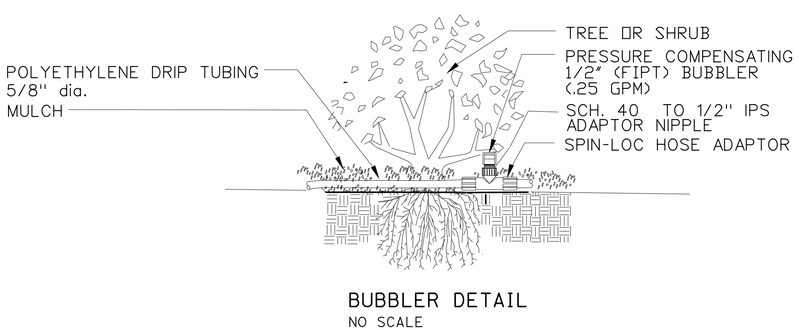

BUBBLER DETAIL
NO SCALE

IRRIGATION PLAN AND QUANTITIES

SCALE: 1"=20'

IP-1

STATE OF CALIFORNIA - DEPARTMENT OF TRANSPORTATION
Caltrans®
LANDSCAPE

FUNCTIONAL SENIOR: TIM BOESE
CALCULATED-DESIGNED BY: LAURA LAZZAROTTO
CHECKED BY: PATRICK SULLIVAN
REVISED BY
DATE REVISED

LAST REVISION 00-00-00
DATE PLOTTED => 18-APR-2016
TIME PLOTTED => 09:20

M

Maint	MAINTENANCE
Max	MAXIMUM
MB	METAL BEAM
MBB	METAL BEAM BARRIER
MBGR	METAL BEAM GUARD RAILING
Med	MEDIAN
MGS	MIDWEST GUARDRAIL SYSTEM
MH	MANHOLE
Min	MINIMUM
Misc	MISCELLANEOUS
Misc I & S	MISCELLANEOUS IRON AND STEEL
Mkr	MARKER
Mod	MODIFIED,
	MODIFY
Mon	MONUMENT
MP	METAL PLATE
MPGR	METAL PLATE GUARD RAILING
MR	MOVEMENT RATING
MSE	MECHANICALLY STABILIZED EMBANKMENT
Mt	MOUNTAIN, MOUNT
Mtl	MATERIAL
MVP	MAINTENANCE VEHICLE PULLOUT

N

N	NORTH
NB	NORTHBOUND
No.	NUMBER (MUST HAVE PERIOD)
Nos.	NUMBERS (MUST HAVE PERIOD)
NPS	NOMINAL PIPE SIZE
NS	NEAR SIDE
NSP	NEW STANDARD PLAN
NTS	NOT TO SCALE

O

Oblr	OBLITERATE
OC	OVERCROSSING
OD	OUTSIDE DIAMETER
OF	OUTSIDE FACE
OG	ORIGINAL GROUND
OGAC	OPEN GRADED ASPHALT CONCRETE
OGFC	OPEN GRADED FRICTION COURSE
OH	OVERHEAD
OHWM	ORDINARY HIGH WATER MARK
O-O	OUT TO OUT
Opp	OPPOSITE
OSD	OVERSIDE DRAIN

P

P	PAGE
PAP	PERFORATED ALUMINUM PIPE
PB	PULL BOX
PC	POINT OF CURVATURE,
	PRECAST
PCC	POINT OF COMPOUND CURVE,
	PORTLAND CEMENT CONCRETE
PCMS	PORTABLE CHANGEABLE MESSAGE SIGN
PCP	PERFORATED CONCRETE PIPE,
	PRESTRESSED CONCRETE PIPE
PCVC	POINT OF COMPOUND VERTICAL CURVE
PEC	PERMIT TO ENTER AND CONSTRUCT
Ped	PEDESTRIAN
Ped OC	PEDESTRIAN OVERCROSSING
Ped UC	PEDESTRIAN UNDERCROSSING
Perm Mtl	PERMEABLE MATERIAL

P continued

PG	PROFILE GRADE
PI	POINT OF INTERSECTION
PJP	PARTIAL JOINT PENETRATION
Pkwy	PARKWAY
₱,PL	PLATE
P/L	PROPERTY LINE
PM	POST MILE,
	TIME FROM NOON TO MIDNIGHT
PN	PAVING NOTCH
POC	POINT OF HORIZONTAL CURVE
POT	POINT OF TANGENT
POVC	POINT OF VERTICAL CURVE
PP	PIPE PILE,
	PLASTIC PIPE,
	POWER POLE
PPL	PREFORMED PERMEABLE LINER
PPP	PERFORATED PLASTIC PIPE
PRC	POINT OF REVERSE CURVE
PRF	PAVEMENT REINFORCING FABRIC
PRVC	POINT OF REVERSE VERTICAL CURVE
PS&E	PLANS, SPECIFICATIONS AND ESTIMATES
PS, P/S	PRESTRESSED
PSP	PERFORATED STEEL PIPE
PT	POINT OF TANGENCY
PVC	POLYVINYL CHLORIDE
Pvmt	PAVEMENT

Q

Qty	QUANTITY

R

R	RADIUS
R & D	REMOVE AND DISPOSE
R & S	REMOVE AND SALVAGE
R/C	RATE OF CHANGE
RCA	REINFORCED CONCRETE ARCH
RCB	REINFORCED CONCRETE BOX
RCP	REINFORCED CONCRETE PIPE
RCPA	REINFORCED CONCRETE PIPE ARCH
Rd	ROAD
Reinf	REINFORCED,
	REINFORCEMENT,
	REINFORCING
Rel	RELOCATE
Repl	REPLACEMENT
Ret	RETAINING
Rev	REVISED, REVISION
Rdwy	ROADWAY
RHMA	RUBBERIZED HOT MIX ASPHALT
Riv	RIVER
RM	ROAD-MIXED
RP	RADIUS POINT,
	REFERENCE POINT
RR	RAILROAD
RSP	ROCK SLOPE PROTECTION,
	REVISED STANDARD PLAN
Rt	RIGHT
Rte	ROUTE
RW	REDWOOD,
	RETAINING WALL
R/W	RIGHT OF WAY
Rwy	RAILWAY

S

S	SOUTH,
	SUPPLEMENT
SAE	STRUCTURE APPROACH EMBANKMENT
Salv	SALVAGE
SAPP	STRUCTURAL ALUMINUM PLATE PIPE
SB	SOUTHBOUND
SC	SAND CUSHION
SCSP	SLOTTED CORRUGATED STEEL PIPE
SD	STORM DRAIN
Sec	SECOND,
	SECTION
Sep	SEPARATION
SG	SUBGRADE
Shld	SHOULDER
Sht	SHEET
Sim	SIMILAR
₤	STATION LINE
SM	SELECTED MATERIAL
Spec	SPECIAL,
	SPECIFICATIONS
SPP	SLOTTED PLASTIC PIPE
SS	SLOPE STAKE
SSBM	STRAP AND SADDLE BRACKET METHOD
SSD	STRUCTURAL SECTION DRAIN
SSPA	STRUCTURAL STEEL PLATE ARCH
SSPP	STRUCTURAL STEEL PLATE PIPE
SSPPA	STRUCTURAL STEEL PLATE PIPE ARCH
SSRP	STEEL SPIRAL RIB PIPE
St	STREET
Sta	STATION
STBB	SINGLE THRIE BEAM BARRIER
Std	STANDARD
Str	STRUCTURE
Surf	SURFACING
SW	SIDEWALK,
	SOUND WALL
Swr	SEWER
Sym	SYMMETRICAL
S4S	SURFACE 4 SIDES

T

T	SEMI-TANGENT
Tan	TANGENT
TBB	THRIE BEAM BARRIER
Tbr	TIMBER
TC	TOP OF CURB
TCB	TRAFFIC CONTROL BOX
TCE	TEMPORARY CONSTRUCTION EASEMENT
Tel	TELEPHONE
Temp	TEMPORARY
TG	TOP OF GRADE
Tot	TOTAL
TP	TELEPHONE POLE
TPB	TREATED PERMEABLE BASE
TPM	TREATED PERMEABLE MATERIAL
Trans	TRANSITION

T continued

TS	TRANSVERSE,
	TRAFFIC SIGNAL,
	TUBULAR STEEL
Typ	TYPICAL

U

UC	UNDERCROSSING
UD	UNDERDRAIN
UG	UNDERGROUND
UON	UNLESS OTHERWISE NOTED
UP	UNDERPASS

V

V	VALVE,
	DESIGN SPEED
Var	VARIABLE,
	VARIES
VC	VERTICAL CURVE
VCP	VITRIFIED CLAY PIPE
Vert	VERTICAL
Via	VIADUCT
Vol	VOLUME

W

W	WEST,
	WIDTH
WB	WESTBOUND
WH	WEEP HOLE
WM	WIRE MESH
WS	WATER SURFACE
WSP	WELDED STEEL PIPE
Wt	WEIGHT
WV	WATER VALVE
WW	WINGWALL
WWLOL	WINGWALL LAYOUT LINE

X

X Sec	CROSS SECTION
Xing	CROSSING

Y

Yr	YEAR
Yrs	YEARS

Dist	COUNTY	ROUTE	POST MILES TOTAL PROJECT	SHEET No.	TOTAL SHEETS
01	Men	101	3.8, 5.3	41	99

Grace M. Tsushima
REGISTERED CIVIL ENGINEER

July 19, 2013
PLANS APPROVAL DATE

REGISTERED PROFESSIONAL ENGINEER
Grace M. Tsushima
No. C49814
Exp. 9-30-14
CIVIL
STATE OF CALIFORNIA

THE STATE OF CALIFORNIA OR ITS OFFICERS OR AGENTS SHALL NOT BE RESPONSIBLE FOR THE ACCURACY OR COMPLETENESS OF SCANNED COPIES OF THIS PLAN SHEET.

TO ACCOMPANY PLANS DATED 3-28-16

UNIT OF MEASUREMENT SYMBOLS:

Some of the symbols used in the project plan quantity tables and in the Bid Item List are:

TABLE A

SYMBOL USED	DEFINITIONS
ACRE	ACRE
CF	CUBIC FOOT
CY	CUBIC YARD
EA	EACH
GAL	GALLON
LB	POUND
LF	LINEAR FOOT
SQFT	SQUARE FOOT
SQYD	SQUARE YARD
STA	100 FEET
TAB	TABLET
TON	2,000 POUNDS

Some of the symbols used in the plans other than in the project plan quantity tables are:

TABLE B

SYMBOL USED	DEFINITIONS
ksi	KIPS PER SQUARE INCH
ksf	KIPS PER SQUARE FOOT
psi	POUNDS PER SQUARE INCH
psf	POUNDS PER SQUARE FOOT
lb/ft^3, pcf	POUNDS PER CUBIC FOOT
tsf	TONS PER SQUARE FOOT
mph, MPH *	MILES PER HOUR
ø	NOMINAL DIAMETER
oz	OUNCE
lb	POUND
kip	1,000 POUNDS
cal	CALORIE
ft	FOOT OR FEET
gal	GALLON

* For use on a sign panel only

STATE OF CALIFORNIA
DEPARTMENT OF TRANSPORTATION

ABBREVIATIONS (SHEET 2 OF 2)

NO SCALE

RSP A10B DATED JULY 19, 2013 SUPERSEDES STANDARD PLAN A10B DATED MAY 20, 2011 - PAGE 2 OF THE STANDARD PLANS BOOK DATED 2010.

REVISED STANDARD PLAN RSP A10B

2010 REVISED STANDARD PLAN RSP A10B

6-7-13

Dist	COUNTY	ROUTE	POST MILES TOTAL PROJECT	SHEET No.	TOTAL SHEETS
01	Men	101	3.8, 5.3	42	99

CERTIFIED ENGINEERING GEOLOGIST

October 30, 2015
PLANS APPROVAL DATE

REGISTERED GEOLOGIST
CHRIS A. RISDEN
CERTIFIED ENGINEERING GEOLOGIST
No. 2541
Exp. 9-30-17
STATE OF CALIFORNIA

THE STATE OF CALIFORNIA OR ITS OFFICERS OR AGENTS SHALL NOT BE RESPONSIBLE FOR THE ACCURACY OR COMPLETENESS OF SCANNED COPIES OF THIS PLAN SHEET.

TO ACCOMPANY PLANS DATED 3-28-16

REFERENCE: CALTRANS SOIL & ROCK LOGGING, CLASSIFICATION, AND PRESENTATION MANUAL (2010)

ABBREVIATION:

GWS = Ground Water Surface

CEMENTATION

DESCRIPTION	CRITERIA
WEAK	CRUMBLES OR BREAKS WITH HANDLING OR LITTLE FINGER PRESSURE.
MODERATE	CRUMBLES OR BREAKS WITH CONSIDERABLE FINGER PRESSURE.
STRONG	WILL NOT CRUMBLE OR BREAK WITH FINGER PRESSURE.

BOREHOLE IDENTIFICATION

SYMBOL	HOLE TYPE	DESCRIPTION
Size	A	AUGER BORING (HOLLOW OR SOLID STEM BUCKET)
Size	R	ROTARY DRILLED BORING (CONVENTIONAL)
	RW	ROTARY DRILLED WITH SELF-CASING WIRE-LINE
	RC	ROTARY CORE WITH CONTINUOUSLY-SAMPLED, SELF-CASING WIRE-LINE
	P	ROTARY PERCUSSION BORING (AIR)
Size	R	ROTARY DRILLED DIAMOND CORE
	RC	ROTARY DRILLED DIAMOND CORE, CONTINUOUSLY SAMPLED
Size	HD	HAND DRIVEN (1-INCH SOIL TUBE)
	HA	HAND AUGER
●	D	DYNAMIC CONE PENETRATION BORING
▲	CPT	CONE PENETRATION TEST (ASTM D 5778)
[ ]	O	OTHER (NOTE ON LOTB)

Note: Size in inches.

CONSISTENCY OF COHESIVE SOILS

DESCRIPTION	SHEAR STRENGTH (tsf)	POCKET PENETROMETER MEASUREMENT, PP, (tsf)	TORVANE MEASUREMENT, TV, (tsf)	VANE SHEAR MEASUREMENT, VS, (tsf)
VERY SOFT	LESS THAN 0.12	LESS THAN 0.25	LESS THAN 0.12	LESS THAN 0.12
SOFT	0.12 - 0.25	0.25 - 0.5	0.12 - 0.25	0.12 - 0.25
MEDIUM STIFF	0.25 - 0.5	0.5 - 1	0.25 - 0.5	0.25 - 0.5
STIFF	0.5 - 1	1 - 2	0.5 - 1	0.5 - 1
VERY STIFF	1 - 2	2 - 4	1 - 2	1 - 2
HARD	GREATER THAN 2	GREATER THAN 4	GREATER THAN 2	GREATER THAN 2

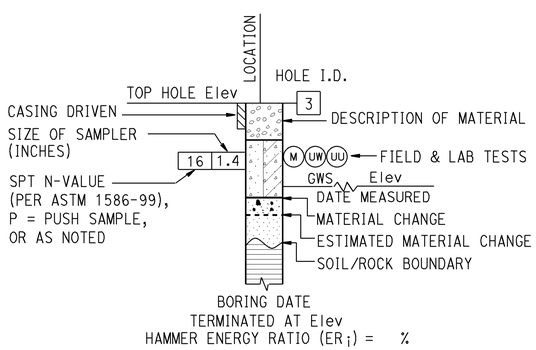

ROTARY BORING

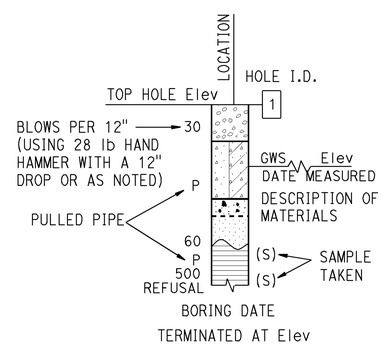

HAND BORING

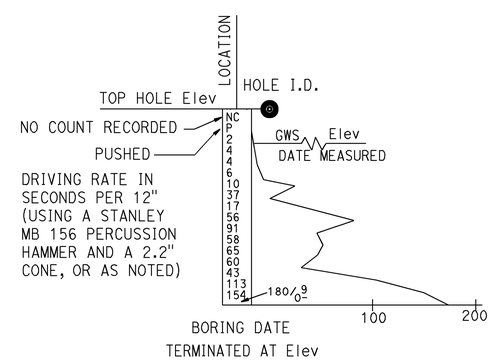

DYNAMIC CONE PENETRATION BORING

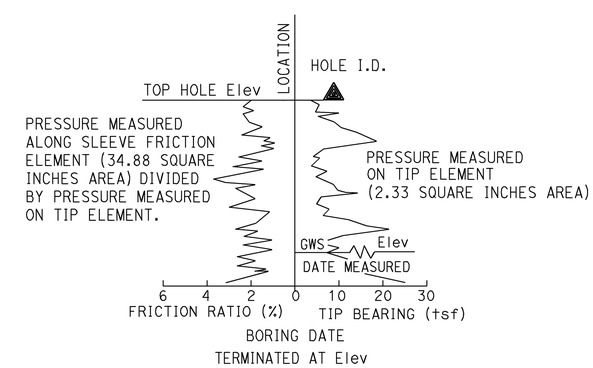

CONE PENETRATION TEST (CPT) BORING

STATE OF CALIFORNIA
DEPARTMENT OF TRANSPORTATION

LEGEND - SOIL (SHEET 1 OF 2)

NO SCALE

RSP A10F DATED OCTOBER 30, 2015 SUPERSEDES STANDARD PLAN A10F DATED MAY 20, 2011 - PAGE 6 OF THE STANDARD PLANS BOOK DATED 2010.

REVISED STANDARD PLAN RSP A10F

2010 REVISED STANDARD PLAN RSP A10F

8-18-15

REFERENCE: CALTRANS SOIL & ROCK LOGGING, CLASSIFICATION, AND PRESENTATION MANUAL (2010)

Dist	COUNTY	ROUTE	POST MILES TOTAL PROJECT	SHEET No.	TOTAL SHEETS
01	Men	101	3.8, 5.3	43	99

CERTIFIED ENGINEERING GEOLOGIST

October 30, 2015
PLANS APPROVAL DATE

REGISTERED GEOLOGIST
CHRIS A. RISDEN
CERTIFIED ENGINEERING GEOLOGIST
No. 2541
Exp. 9-30-17
STATE OF CALIFORNIA

THE STATE OF CALIFORNIA OR ITS OFFICERS OR AGENTS SHALL NOT BE RESPONSIBLE FOR THE ACCURACY OR COMPLETENESS OF SCANNED COPIES OF THIS PLAN SHEET.

TO ACCOMPANY PLANS DATED 3-28-16

GROUP SYMBOLS AND NAMES

GRAPHIC/SYMBOL	GROUP NAMES	GRAPHIC/SYMBOL	GROUP NAMES
GW	WELL-GRADED GRAVEL WELL-GRADED GRAVEL WITH SAND	CL	LEAN CLAY LEAN CLAY WITH SAND LEAN CLAY WITH GRAVEL SANDY LEAN CLAY SANDY LEAN CLAY WITH GRAVEL GRAVELLY LEAN CLAY GRAVELLY LEAN CLAY WITH SAND
GP	POORLY-GRADED GRAVEL POORLY-GRADED GRAVEL WITH SAND		
GW-GM	WELL-GRADED GRAVEL WITH SILT WELL-GRADED GRAVEL WITH SILT AND SAND	CL-ML	SILTY CLAY SILTY CLAY WITH SAND SILTY CLAY WITH GRAVEL SANDY SILTY CLAY SANDY SILTY CLAY WITH GRAVEL GRAVELLY SILTY CLAY GRAVELLY SILTY CLAY WITH SAND
GW-GC	WELL-GRADED GRAVEL WITH CLAY (OR SILTY CLAY) WELL-GRADED GRAVEL WITH CLAY AND SAND (OR SILTY CLAY AND SAND)		
GP-GM	POORLY-GRADED GRAVEL WITH SILT POORLY-GRADED GRAVEL WITH SILT AND SAND	ML	SILT SILT WITH SAND SILT WITH GRAVEL SANDY SILT SANDY SILT WITH GRAVEL GRAVELLY SILT GRAVELLY SILT WITH SAND
GP-GC	POORLY-GRADED GRAVEL WITH CLAY (OR SILTY CLAY) POORLY-GRADED GRAVEL WITH CLAY AND SAND (OR SILTY CLAY AND SAND)		
GM	SILTY GRAVEL SILTY GRAVEL WITH SAND	OL	ORGANIC LEAN CLAY ORGANIC LEAN CLAY WITH SAND ORGANIC LEAN CLAY WITH GRAVEL SANDY ORGANIC LEAN CLAY SANDY ORGANIC LEAN CLAY WITH GRAVEL GRAVELLY ORGANIC LEAN CLAY GRAVELLY ORGANIC LEAN CLAY WITH SAND
GC	CLAYEY GRAVEL CLAYEY GRAVEL WITH SAND		
GC-GM	SILTY, CLAYEY GRAVEL SILTY, CLAYEY GRAVEL WITH SAND	OL	ORGANIC SILT ORGANIC SILT WITH SAND ORGANIC SILT WITH GRAVEL SANDY ORGANIC SILT SANDY ORGANIC SILT WITH GRAVEL GRAVELLY ORGANIC SILT GRAVELLY ORGANIC SILT WITH SAND
SW	WELL-GRADED SAND WELL-GRADED SAND WITH GRAVEL		
SP	POORLY-GRADED SAND POORLY-GRADED SAND WITH GRAVEL	CH	FAT CLAY FAT CLAY WITH SAND FAT CLAY WITH GRAVEL SANDY FAT CLAY SANDY FAT CLAY WITH GRAVEL GRAVELLY FAT CLAY GRAVELLY FAT CLAY WITH SAND
SW-SM	WELL-GRADED SAND WITH SILT WELL-GRADED SAND WITH SILT AND GRAVEL		
SW-SC	WELL-GRADED SAND WITH CLAY (OR SILTY CLAY) WELL-GRADED SAND WITH CLAY AND GRAVEL (OR SILTY CLAY AND GRAVEL)	MH	ELASTIC SILT ELASTIC SILT WITH SAND ELASTIC SILT WITH GRAVEL SANDY ELASTIC SILT SANDY ELASTIC SILT WITH GRAVEL GRAVELLY ELASTIC SILT GRAVELLY ELASTIC SILT WITH SAND
SP-SM	POORLY-GRADED SAND WITH SILT POORLY-GRADED SAND WITH SILT AND GRAVEL		
SP-SC	POORLY-GRADED SAND WITH CLAY (OR SILTY CLAY) POORLY-GRADED SAND WITH CLAY AND GRAVEL (OR SILTY CLAY AND GRAVEL)	OH	ORGANIC FAT CLAY ORGANIC FAT CLAY WITH SAND ORGANIC FAT CLAY WITH GRAVEL SANDY ORGANIC FAT CLAY SANDY ORGANIC FAT CLAY WITH GRAVEL GRAVELLY ORGANIC FAT CLAY GRAVELLY ORGANIC FAT CLAY WITH SAND
SM	SILTY SAND SILTY SAND WITH GRAVEL		
SC	CLAYEY SAND CLAYEY SAND WITH GRAVEL	OH	ORGANIC ELASTIC SILT ORGANIC ELASTIC SILT WITH SAND ORGANIC ELASTIC SILT WITH GRAVEL SANDY ORGANIC ELASTIC SILT SANDY ORGANIC ELASTIC SILT WITH GRAVEL GRAVELLY ORGANIC ELASTIC SILT GRAVELLY ORGANIC ELASTIC SILT WITH SAND
SC-SM	SILTY, CLAYEY SAND SILTY, CLAYEY SAND WITH GRAVEL		
PT	PEAT	OL/OH	ORGANIC SOIL ORGANIC SOIL WITH SAND ORGANIC SOIL WITH GRAVEL SANDY ORGANIC SOIL SANDY ORGANIC SOIL WITH GRAVEL GRAVELLY ORGANIC SOIL GRAVELLY ORGANIC SOIL WITH SAND
	COBBLES COBBLES AND BOULDERS BOULDERS		

FIELD AND LABORATORY TESTING

- (C) CONSOLIDATION (ASTM D2435)
- (CL) COLLAPSE POTENTIAL (ASTM D4546)
- (CP) COMPACTION CURVE (CTM 216)
- (CR) CORROSIVITY TESTING (CTM 643, CTM 422, CTM 417)
- (CU) CONSOLIDATED UNDRAINED TRIAXIAL (ASTM D4767)
- (DS) DIRECT SHEAR (ASTM D3080)
- (EI) EXPANSION INDEX (ASTM D4829)
- (M) MOISTURE CONTENT (ASTM D2216)
- (OC) ORGANIC CONTENT-% (ASTM D2974)
- (P) PERMEABILITY (CTM 220)
- (PA) PARTICLE SIZE ANALYSIS (ASTM D422)
- (PI) PLASTICITY INDEX (AASHTO T 90) LIQUID LIMIT (AASHTO T 89)
- (PL) POINT LOAD INDEX (ASTM D5731)
- (PM) PRESSURE METER
- (R) R-VALUE (CTM 301)
- (SE) SAND EQUIVALENT (CTM 217)
- (SG) SPECIFIC GRAVITY (AASHTO T 100)
- (SL) SHRINKAGE LIMIT (ASTM D4943)
- (SW) SWELL POTENTIAL (ASTM D4546)
- (UC) UNCONFINED COMPRESSION-SOIL (ASTM D2166) UNCONFINED COMPRESSION-ROCK (ASTM D7012 - METHOD C)
- (UU) UNCONSOLIDATED UNDRAINED TRIAXIAL (ASTM D2850)
- (UW) UNIT WEIGHT (ASTM D7263 - METHOD B)

APPARENT DENSITY OF COHESIONLESS SOILS

DESCRIPTION	SPT N_{60} (BLOWS / 12 INCHES)
VERY LOOSE	0 - 5
LOOSE	5 - 10
MEDIUM DENSE	10 - 30
DENSE	30 - 50
VERY DENSE	GREATER THAN 50

MOISTURE

DESCRIPTION	CRITERIA
DRY	NO DISCERNABLE MOISTURE
MOIST	MOISTURE PRESENT, BUT NO FREE WATER
WET	VISIBLE FREE WATER

PERCENT OR PROPORTION OF SOILS

DESCRIPTION	CRITERIA
TRACE	PARTICLES ARE PRESENT BUT ESTIMATED TO BE LESS THAN 5%
FEW	5% - 10%
LITTLE	15% - 25%
SOME	30% - 45%
MOSTLY	50% - 100%

PARTICLE SIZE

DESCRIPTION		SIZE
BOULDER		GREATER THAN 12"
COBBLE		3" - 12"
GRAVEL	COARSE	3/4" - 3"
	FINE	1/5" - 3/4"
SAND	COARSE	1/16" - 1/5"
	MEDIUM	1/64" - 1/16"
	FINE	1/300" - 1/64"
SILT AND CLAY		LESS THAN 1/300"

STATE OF CALIFORNIA
DEPARTMENT OF TRANSPORTATION

LEGEND - SOIL (SHEET 2 OF 2)

NO SCALE

RSP A10G DATED OCTOBER 30, 2015 SUPERSEDES STANDARD PLAN A10G DATED MAY 20, 2011 - PAGE 7 OF THE STANDARD PLANS BOOK DATED 2010.

REVISED STANDARD PLAN RSP A10G

2010 REVISED STANDARD PLAN RSP A10G

9-22-16

Dist	COUNTY	ROUTE	POST MILES TOTAL PROJECT	SHEET No.	TOTAL SHEETS
01	Men	101	3.8, 5.3	44	99

REGISTERED CIVIL ENGINEER

October 30, 2015
PLANS APPROVAL DATE

REGISTERED PROFESSIONAL ENGINEER
Carl M. Duan
No. C59976
Exp. 6-30-16
CIVIL
STATE OF CALIFORNIA

THE STATE OF CALIFORNIA OR ITS OFFICERS OR AGENTS SHALL NOT BE RESPONSIBLE FOR THE ACCURACY OR COMPLETENESS OF SCANNED COPIES OF THIS PLAN SHEET.

TO ACCOMPANY PLANS DATED 3-28-16

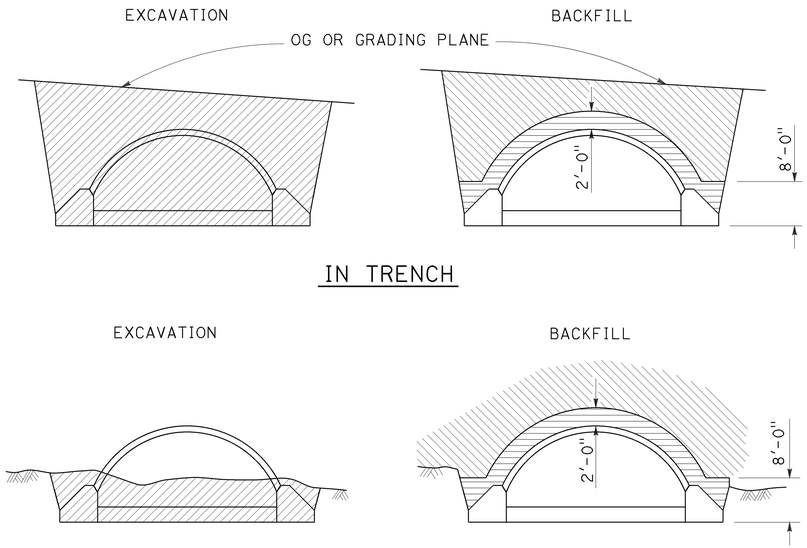

STRUCTURAL STEEL PLATE ARCHES

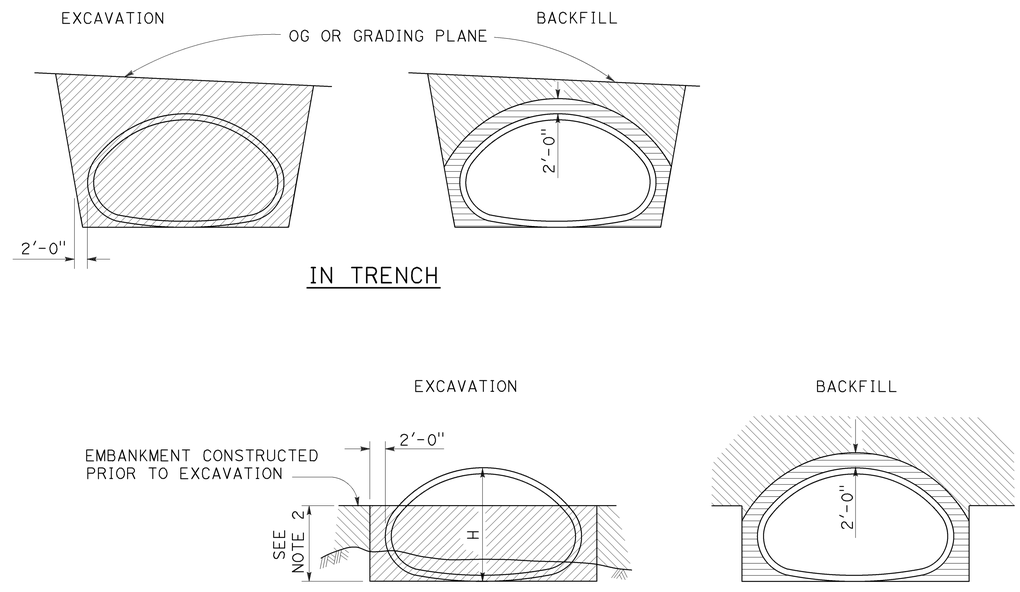

STRUCTURAL STEEL PLATE PIPE ARCHES
AND VEHICULAR UNDERCROSSING

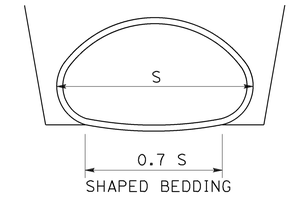

SHAPED BEDDING
S = Larger than 84"

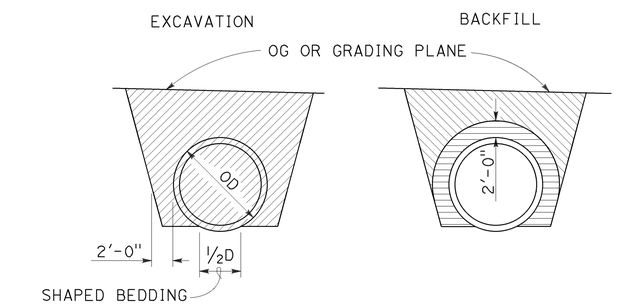

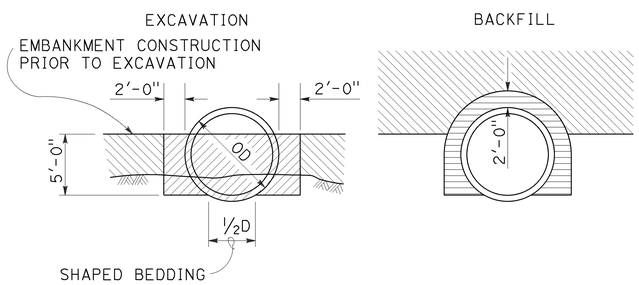

PIPES
Larger than 84"

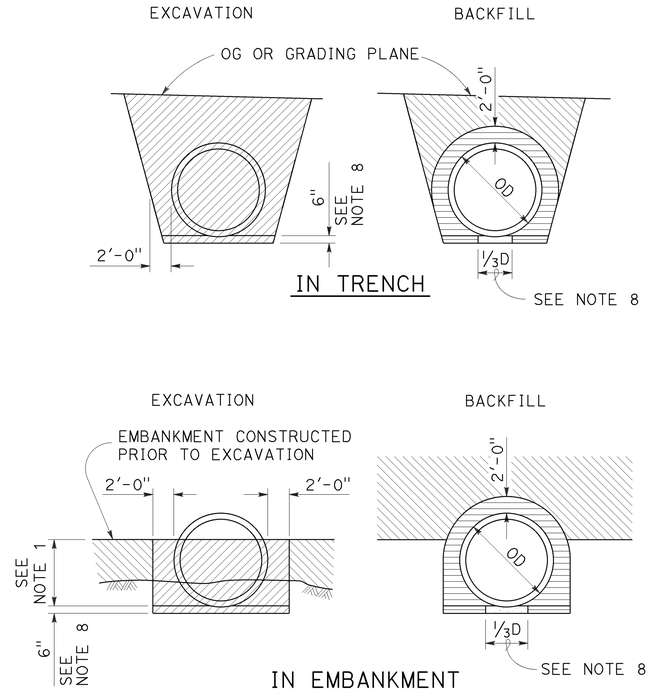

METAL AND PLASTIC PIPES AND
CORRUGATED METAL PIPE ARCHES
84" or Smaller

NOTES:

1. PIPES: 30" minimum for diameters up to and including 42" then ⅔ diameter but no more than 60" required. CORRUGATED METAL PIPE ARCHES: 30" maximum.
2. ⅔ H up to 60" maximum.
3. Slope or shore excavation sides as necessary.
4. Backfill shall be placed full width of excavation except as noted.
5. Diagrams do not apply to overside drains.
6. Dimensions shown are minimum.
7. Construction strutting of structural steel plate pipe, arches and vehicular undercrossing to be used when shown on the project plans. When shown, see Standard Plan D88A for strutting requirements.
8. Excavation below pipe and 80% relative compaction requirements for plastic pipes only.
9. D is the inside diameter (ID) of the pipe.

LEGEND

- STRUCTURE EXCAVATION (CULVERT)
- ROADWAY EMBANKMENT
- STRUCTURE BACKFILL (CULVERT) 95% RELATIVE COMPACTION
- STRUCTURE BACKFILL (CULVERT) 80% RELATIVE COMPACTION

STATE OF CALIFORNIA
DEPARTMENT OF TRANSPORTATION

EXCAVATION AND BACKFILL METAL AND PLASTIC CULVERTS

NO SCALE

RSP A62F DATED OCTOBER 30, 2015 SUPERSEDES STANDARD PLAN A62F DATED MAY 20, 2011 - PAGE 26 OF THE STANDARD PLANS BOOK DATED 2010.

REVISED STANDARD PLAN RSP A62F

2010 REVISED STANDARD PLAN RSP A62F

10-13-15

Dist	COUNTY	ROUTE	POST MILES TOTAL PROJECT	SHEET No.	TOTAL SHEETS
01	Men	101	3.8, 5.3	45	99

REGISTERED CIVIL ENGINEER

July 19, 2013
PLANS APPROVAL DATE

REGISTERED PROFESSIONAL ENGINEER Michael Janzen No. 44788 Exp. 03-31-14 CIVIL STATE OF CALIFORNIA

THE STATE OF CALIFORNIA OR ITS OFFICERS OR AGENTS SHALL NOT BE RESPONSIBLE FOR THE ACCURACY OR COMPLETENESS OF SCANNED COPIES OF THIS PLAN SHEET.

TO ACCOMPANY PLANS DATED 3-28-16

2010 REVISED STANDARD PLAN RSP A87A

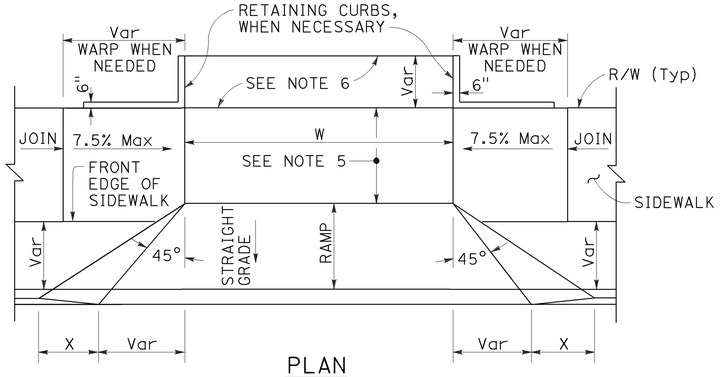

PLAN

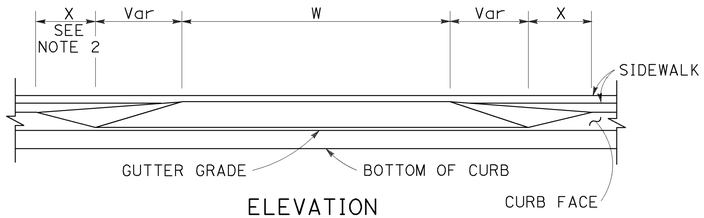

ELEVATION

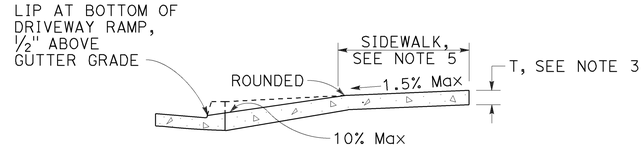

CASE A

Typical driveway, sidewalk not depressed

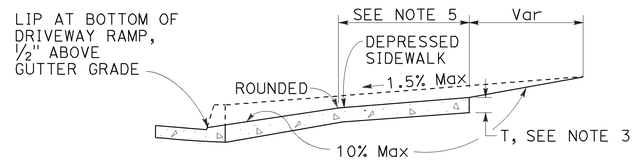

CASE B

Driveway with depressed sidewalk

SECTIONS

DRIVEWAYS

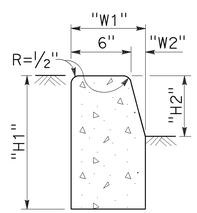

TYPE A1 CURBS

See Table A

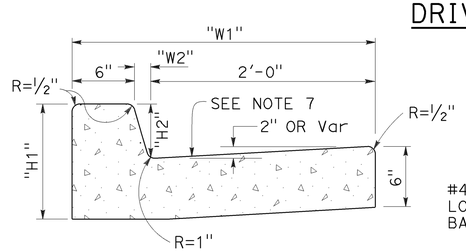

TYPE A2 CURBS

See Table A

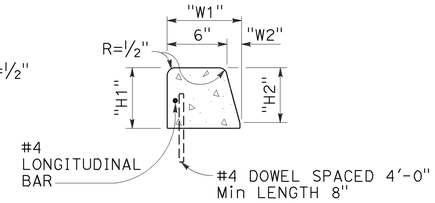

TYPE A3 CURBS

Superimposed on existing pavement
See Table A

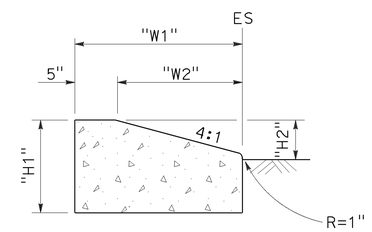

TYPE D CURBS

See Table A

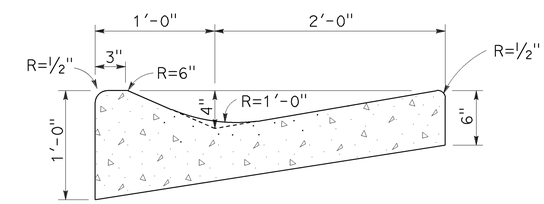

TYPE E CURB

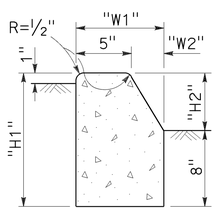

TYPE B1 CURBS

See Table A

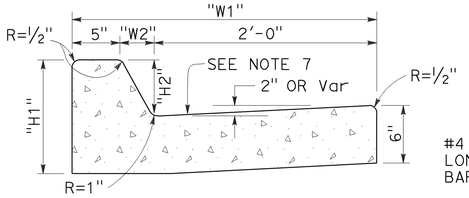

TYPE B2 CURBS

See Table A

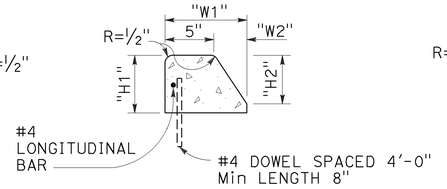

TYPE B3 CURBS

Superimposed on existing pavement
See Table A

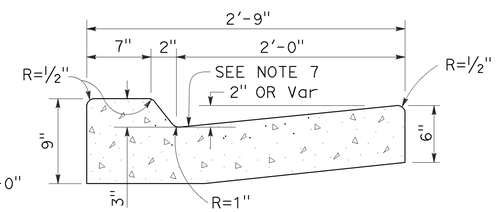

TYPE B4 CURBS

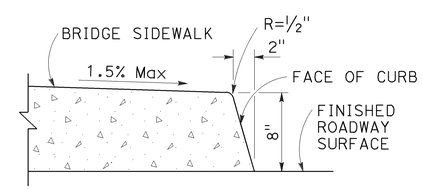

TYPE H CURB

On Bridges

CURBS

TABLE A

CURB TYPE	DIMENSIONS			
	"H1"	"H2"	"W1"	"W2"
A1-6	1'-2"	6"	7½"	1½"
A1-8	1'-4"	8"	8"	2"
A2-6	1'-0"	6"	2'-7½"	1½"
A2-8	1'-2"	8"	2'-8"	2"
A3-6	6"	5"	7¼"	1¼"
A3-8	8"	7"	7¾"	1¾"
B1-4	1'-0"	4"	7½"	2½"
B1-6	1'-2"	6"	9"	4"
B2-4	10"	4"	2'-7½"	2½"
B2-6	1'-0"	6"	2'-9"	4"
B3-4	4"	3"	7"	2"
B3-6	6"	5"	8½"	3½"
D-4	10"	4"	1'-6"	1'-1"
D-6	1'-0"	6"	2'-2"	1'-9"

CURB QUANTITIES

TYPE	CUBIC YARDS PER LINEAR FOOT
A1-6	0.02585
A1-8	0.03084
A2-6	0.05903
A2-8	0.06379
A3-6	0.01036
A3-8	0.01435
B1-4	0.02185
B1-6	0.02930
B2-4	0.05515
B2-6	0.06171
B3-4	0.00641
B3-6	0.01074
B4	0.05709
D-4	0.04083
D-6	0.06804
E	0.06661

NOTES:

1. Case A driveway section typically applies.
2. X=3'-0" except for curb heights over 10" where 4:1 slopes shall be used on curb slope.
3. Sidewalk and ramp thickness "T" at driveway shall be 4" for residental and 6" for commercial.
4. Difference in slope of the driveway ramp and the slope of a line between the gutter and a point on the roadway 5'-0" from gutter line shall not exceed 15%. Reduce driveway ramp slope, not gutter slope, where required.
5. Minimum width of clear passageway for sidewalk shall be 4'-2".
6. Retaining curbs and acquisition of construction easement may be necessary for narrow sidewalks or curb heights in excess of 6".
7. Across the pedestrian route at curb ramp locations, the gutter pan slope shall not exceed 1" of depth for each 2'-0" of width.

STATE OF CALIFORNIA
DEPARTMENT OF TRANSPORTATION

CURBS AND DRIVEWAYS

NO SCALE

RSP A87A DATED JULY 19, 2013 SUPERSEDES STANDARD PLAN A87A
DATED MAY 20, 2011 - PAGE 119 OF THE STANDARD PLANS BOOK DATED 2010.

REVISED STANDARD PLAN RSP A87A

Dist	COUNTY	ROUTE	POST MILES TOTAL PROJECT	SHEET No.	TOTAL SHEETS
01	Men	101	3.8, 5.3	46	99

REGISTERED CIVIL ENGINEER

January 15, 2016
PLANS APPROVAL DATE

REGISTERED PROFESSIONAL ENGINEER
Michael Janzen
No. 44788
Exp. 3-31-16
CIVIL
STATE OF CALIFORNIA

THE STATE OF CALIFORNIA OR ITS OFFICERS OR AGENTS SHALL NOT BE RESPONSIBLE FOR THE ACCURACY OR COMPLETENESS OF SCANNED COPIES OF THIS PLAN SHEET.

TO ACCOMPANY PLANS DATED 3-28-16

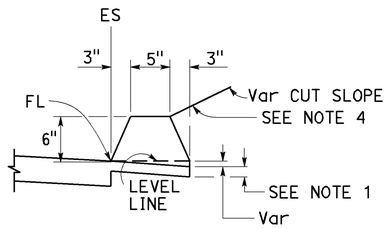

TYPE A
See Notes 3 and 5

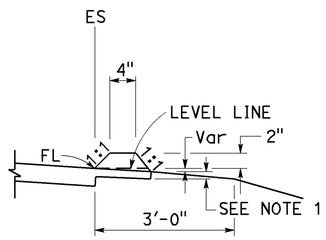

TYPE C

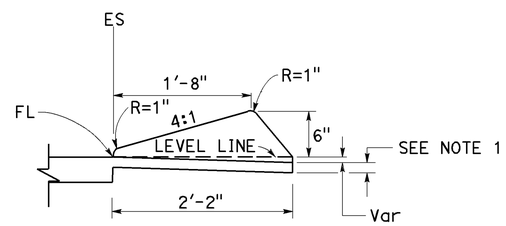

TYPE D

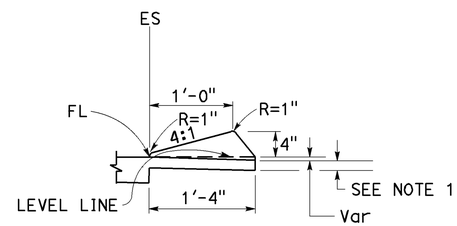

TYPE E

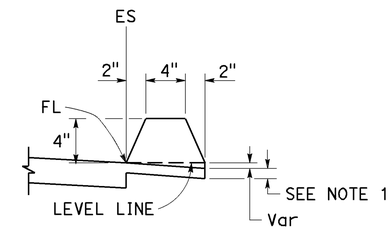

TYPE F
See Note 5

DIKES

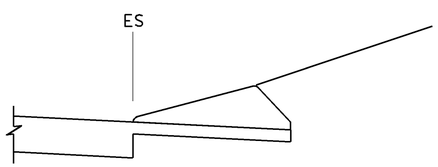

CASE C-1
Cut Slope

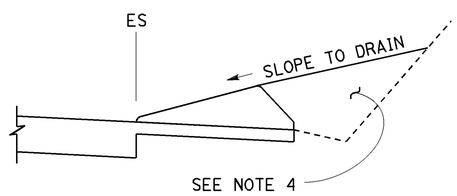

CASE C-2
Cut Slope

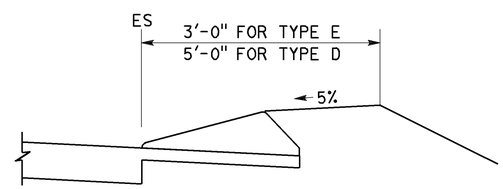

CASE F

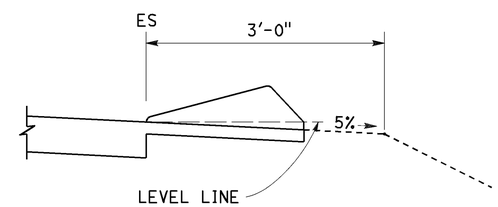

CASE R
See Note 2

TYPE D AND E BACKFILL DETAILS

NOTES:

1. For HMA shoulders only, extend top layer of HMA placed on the shoulder under dike with no joint at the ES. For projects with OGFC shoulders, do not extend OGFC under dike. See project plans for modified dike detail.
2. Case R applies to retrofit only projects where restrictive conditions do not provide enough width for Case F backfill.
3. Type A dike only to be used where restrictive slope conditions do not provide enough width to use Type D or Type E dike.
4. Fill and compact with excavated material to top of dike.
5. Use Type A or F dike, where dike is required with guardrail installations. See Revised Standard Plan RSP A77N4 for dike positioning details. See Revised Standard Plan RSP A77N3 for hinge point offsets with guardrail.

DIKE QUANTITIES

TYPE	CUBIC YARDS PER LINEAR FOOT
A	0.0135
C	0.0038
D	0.0293
E	0.0130
F	0.0066

Quantities based on 5% cross slope.

STATE OF CALIFORNIA
DEPARTMENT OF TRANSPORTATION

HOT MIX ASPHALT DIKES

NO SCALE

RSP A87B DATED JANUARY 15, 2016 SUPERSEDES RSP A87B DATED JULY 19, 2013 AND STANDARD PLAN A87B DATED MAY 20, 2011 - PAGE 120 OF THE STANDARD PLANS BOOK DATED 2010.

REVISED STANDARD PLAN RSP A87B

2010 REVISED STANDARD PLAN RSP A87B

11-17-15

Dist	COUNTY	ROUTE	POST MILES TOTAL PROJECT	SHEET No.	TOTAL SHEETS
01	Men	101	3.8, 5.3	47	99

REGISTERED CIVIL ENGINEER

October 21, 2011
PLANS APPROVAL DATE

REGISTERED PROFESSIONAL ENGINEER
Tillat Satter
No. C42892
Exp. 3-31-12
CIVIL
STATE OF CALIFORNIA

THE STATE OF CALIFORNIA OR ITS OFFICERS OR AGENTS SHALL NOT BE RESPONSIBLE FOR THE ACCURACY OR COMPLETENESS OF SCANNED COPIES OF THIS PLAN SHEET.

TO ACCOMPANY PLANS DATED 3-28-16

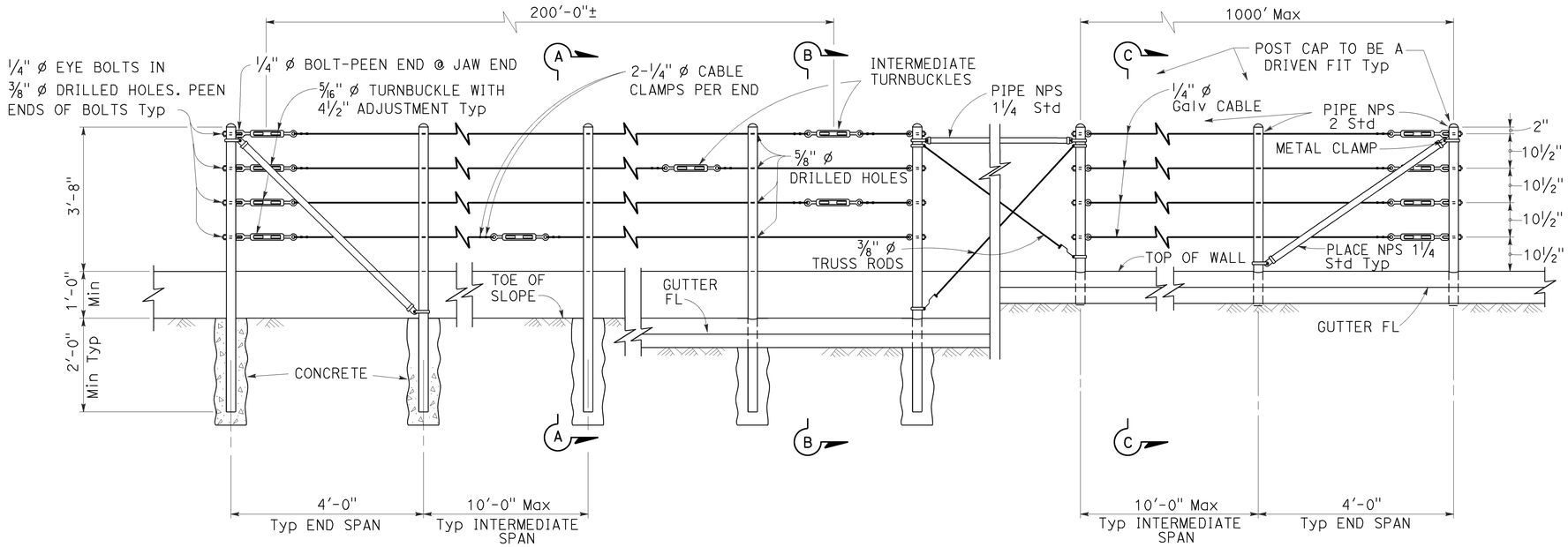

EXISTING WALL (WITHOUT GUTTER)
Existing

RETAINING WALL (WITH GUTTER)
Existing

RETAINING WALL (WITH GUTTER)
New construction

ELEVATION

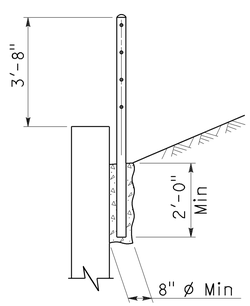

SECTION A-A
Existing

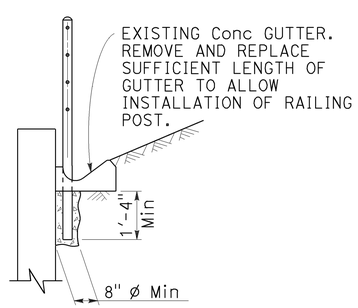

SECTION B-B
Existing

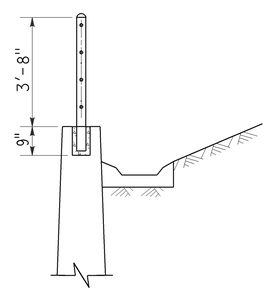

SECTION C-C
New construction

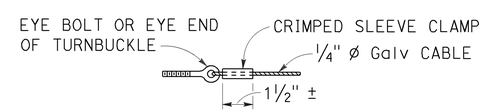

ALTERNATIVE CABLE CONNECTION

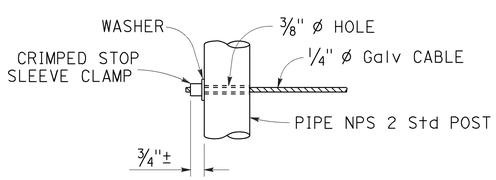

ALTERNATIVE DEAD END ANCHORAGE

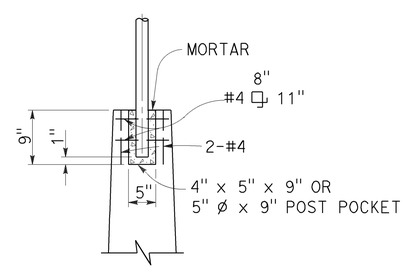

POST POCKET

NOTES:

1. Maximum distance between turnbuckles shall be 200'-0"±.
2. Intermediate turnbuckles to be placed in adjacent spans.
3. Cable shall not be spliced between intermediate turnbuckles and end posts.
4. Posts to be vertical.
5. Alignment of holes in posts may vary to conform to slope of top of retaining wall.
6. The Contractor shall verify all dependent dimensions in the field before ordering or fabricating any material.
7. Line posts shall be braced horizontally and trussed diagonally in both directions at intervals not to exceed 1000'.
8. Post pockets to be centered in top of wall.
9. Typical end spans, braced in both directions, shall be constructed at changes in line where the angle of deflection is 15° or more.
10. Provide thimbles at all cable loops.

STATE OF CALIFORNIA
DEPARTMENT OF TRANSPORTATION

CABLE RAILING

NO SCALE

RSP B11-47 DATED OCTOBER 21, 2011 SUPERSEDES STANDARD PLAN B11-47 DATED MAY 20, 2011 - PAGE 293 OF THE STANDARD PLANS BOOK DATED 2010.

REVISED STANDARD PLAN RSP B11-47

2010 REVISED STANDARD PLAN RSP B11-47

9-14-11

TO ACCOMPANY PLANS DATED 3-28-16

Dist	COUNTY	ROUTE	POST MILES TOTAL PROJECT	SHEET No.	TOTAL SHEETS
01	Men	101	3.8, 5.3	48	99

Glenn DeCou
REGISTERED CIVIL ENGINEER

October 19, 2012
PLANS APPROVAL DATE

REGISTERED PROFESSIONAL ENGINEER Glenn DeCou No. C34547 Exp. 9-30-13 CIVIL STATE OF CALIFORNIA

THE STATE OF CALIFORNIA OR ITS OFFICERS OR AGENTS SHALL NOT BE RESPONSIBLE FOR THE ACCURACY OR COMPLETENESS OF SCANNED COPIES OF THIS PLAN SHEET.

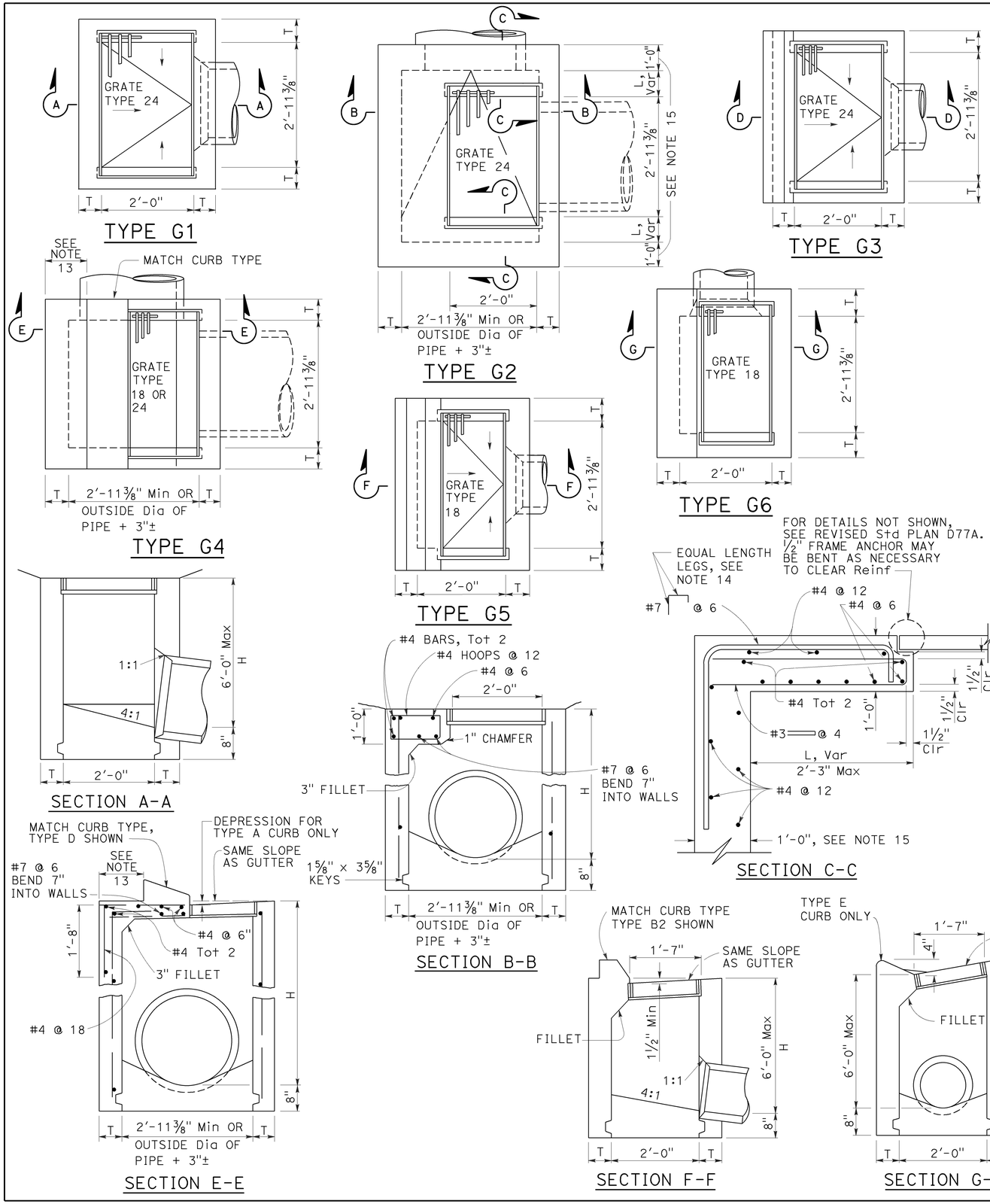

NOTES:

1. "H" is the difference in elevation between the outlet pipe flow line and the normal gutter grade line undepressed.
2. For "T" wall thickness, see Table A below.
3. Wall reinforcing not required when "H" is 8'-0" or less and the unsupported width or length is 7'-0" or less. Walls exceeding these limits shall be reinforced with #4 bars @ 1'-6" ± centers placed 1½" clear to inside of box unless otherwise shown.
4. Inlet bottom reinforcing not required. See Standard Plan D74C for alternative reinforced bottom and alternative half round bottom.
5. Steps-None required where "H" is less than 2'-6". Where "H" is 2'-6" or more, install steps with lowest rung 1'-0" above the floor and highest rung not more than 6" below top of inlet. The distance between steps shall not exceed 1'-0" and shall be uniform throughout the length of the wall. Place steps in the wall without an opening. Steps inserts may be substituted for the bar steps. Step inserts shall comply with State Industrial Safety requirements. See Standard Plan D74C for step details.
6. Details shown apply to both metal and concrete pipe.
7. Pipe(s) can be placed in any wall.
8. Curb section shall match adjacent curb.
9. Basin floors shall have wood trowel finish and a minimum slope of 12:3 from all directions toward outlet pipe.
10. Set inlet so that grate bars are parallel to direction of principal surface flow.
11. See Revised Standard Plans D77A and D77B for grate and frame details and weights of miscellaneous iron and steel.
12. See Standard Plan D78A for gutter depression details.
13. This dimenison will vary with different grates, curbs types, box width and wall thickness.
14. Bar may be rotated as necessary to clear opening. Where "L" is 6" or less, bar may be omitted.
15. Where "L" is 6" or less, wall thickness shall be as shown in Table A.
16. Cast-in-place inlets to be formed around all pipes/stubs intersecting the inlet, and concrete poured in one continuous operation. Precast inlets shall have mortared connections conforming to details for Type GCP Inlet shown on Standard Plan D75B. See Standard Specifications for mortar composition.

TABLE A

CONCRETE QUANTITIES				
TYPE	H=3'-0" TO 8'-0" (T=6")		H=8'-1" TO 20'-0" (T=8")	
	H=3'-0" (CY)	ADDITIONAL PCC PER FOOT (CY)	H=8'-1" (CY)	ADDITIONAL PCC PER FOOT (CY)
G-1	0.95	0.220	See Note A	SEE NOTE A
G-2*	1.31	0.255	3.50	0.357
G-3	1.03	0.220	See Note A	SEE NOTE A
G-4* (TYPE 24)	1.27	0.255	3.48	0.357
G-4* (TYPE 18)	1.30	0.255	3.50	0.357
G-5	1.02	0.220	SEE NOTE A	SEE NOTE A
G-6	1.04	0.220	SEE NOTE A	SEE NOTE A

TABLE BASED ON 8" FLOOR SLAB. NO DEDUCTIONS ARE TO BE MADE TO THESE QUANTITIES BECAUSE OF PIPE OPENINGS, DIFFERENT FLOOR ALTERNATIVES OR DIFFERENT CURB TYPES. * QUANTITIES FOR TYPE G-2 AND G-4 INLETS BASED ON THE MINIMUM INTERIOR DIMENSIONS.

NOTE A:

Maximum allowable height 6'-0".

STATE OF CALIFORNIA
DEPARTMENT OF TRANSPORTATION

DRAINAGE INLETS

NO SCALE

RSP D73 DATED OCTOBER 19, 2012 SUPERSEDES STANDARD PLAN D73 DATED MAY 20, 2011 - PAGE 156 OF THE STANDARD PLANS BOOK DATED 2010.

REVISED STANDARD PLAN RSP D73

2010 REVISED STANDARD PLAN RSP D73

7-19-12

Dist	COUNTY	ROUTE	POST MILES TOTAL PROJECT	SHEET No.	TOTAL SHEETS
01	Men	101	3.8, 5.3	49	99

Raymond Don Tsztoo
REGISTERED CIVIL ENGINEER

April 19, 2013
PLANS APPROVAL DATE

REGISTERED PROFESSIONAL ENGINEER Raymond Don Tsztoo No. C37332 Exp. 6-30-14 CIVIL STATE OF CALIFORNIA

THE STATE OF CALIFORNIA OR ITS OFFICERS OR AGENTS SHALL NOT BE RESPONSIBLE FOR THE ACCURACY OR COMPLETENESS OF SCANNED COPIES OF THIS PLAN SHEET.

TO ACCOMPANY PLANS DATED 3-28-16

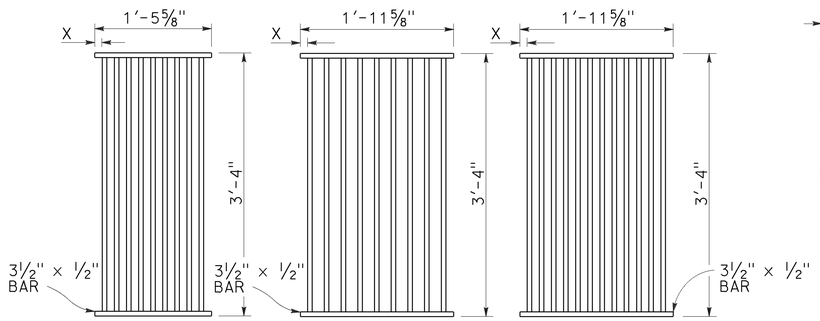

TYPE 18-9

1⅜" Clear spacing. Use within the roadbed on highways where bicycles and pedestrians are excluded.

TYPE 24-9

2" Clear spacing. Use in locations off the roadbed on all types of highways.

TYPE 24-12

1⅜" Clear spacing. Use within the roadbed on highways where bicycles and pedestrians are excluded.

RECTANGULAR GRATE DETAILS

(See table below)

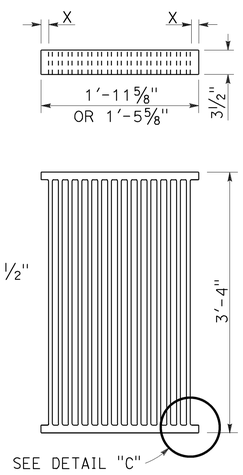

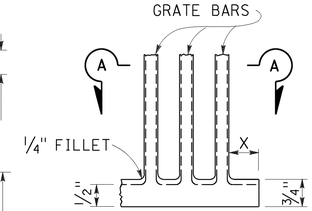

DETAIL "C"

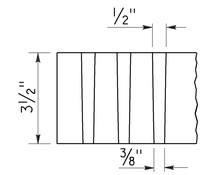

SECTION A-A

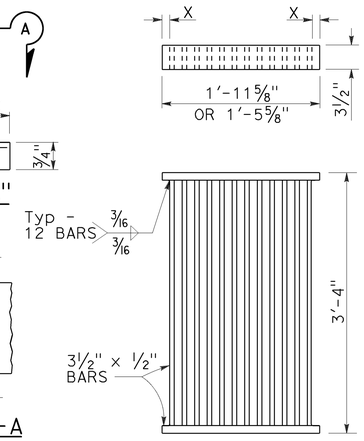

ALTERNATIVE CAST DUCTILE IRON GRATE OR CAST CARBON STEEL GRATE

ALTERNATIVE WELDED GRATE

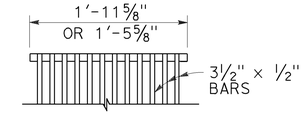

CAST END BLOCK

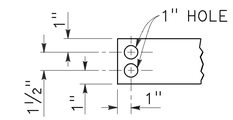

END OF BAR

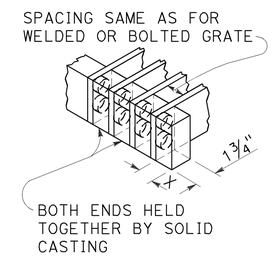

ALTERNATIVE CAST DUCTILE IRON OR CAST CARBON STEEL END BLOCK GRATE

NOTES:

1. Grate type numbers refer to approximate width of grate in inches and number of bars, respectively.
2. Contractor has the option of using cast ductile iron, cast carbon steel, welded, bolted, or cast end block grate.
3. Rounded top of bars optional on all grates.
4. Pipe inlets with a grate shall be placed so that bars parallel direction of principle surface flow.
5. Complete joint penetration butt welds may be substituted for the fillet welds on all anchors.
6. Standard square, hexagon, round or equivalent headed anchors may be substituted for the right angle hooks on the anchors shown on this plan.
7. Grate and frame weights are based on welded grates (weights of face angles, steps, protection bars, etc. are not included).
8. Connect chain to grate and frame only at locations shown on the plans. When chain is required, do not use cast ductile iron grates.

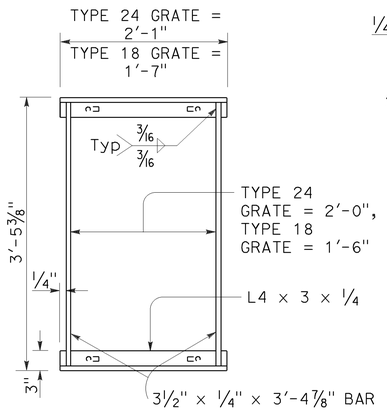

TYPICAL FRAME

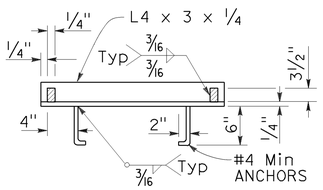

CROSS SECTION

(Thru frame)

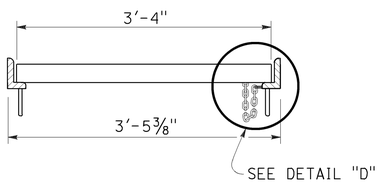

LONGITUDINAL SECTION

(Thru frame and grate)

RECTANGULAR FRAME DETAILS

(For all rectangular grates)

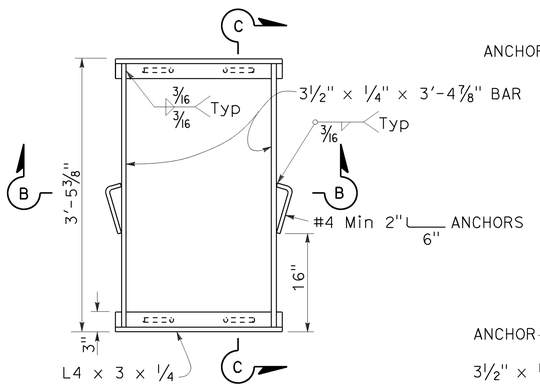

TYPICAL FRAME

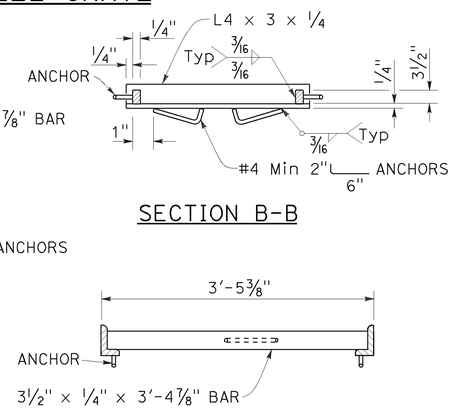

SECTION B-B

SECTION C-C

ALTERNATIVE ANCHOR FOR RECTANGULAR FRAME

(For details not shown, See Rectangular Frame Details)

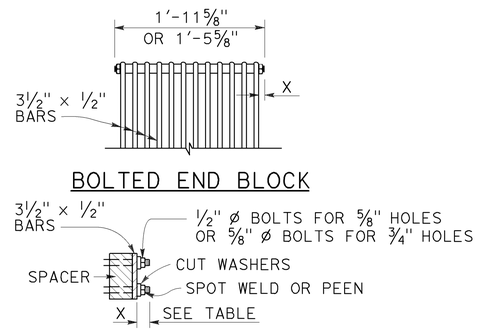

ALTERNATIVE BOLTED GRATE

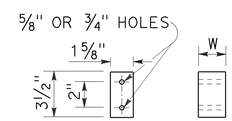

BAR SPACER

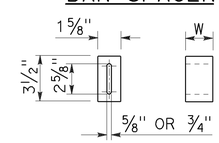

ALTERNATIVE SPACER

W = 1⅜" or 2"

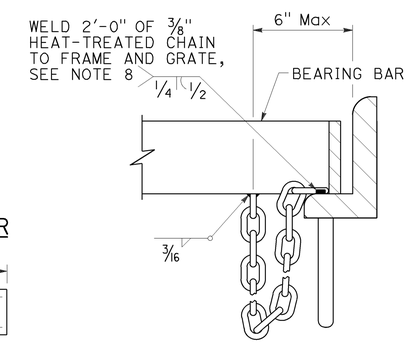

DETAIL "D"

(Steel grates only)

GRATE BAR SPACING TABLE

TYPE	No. OF BARS	CLEAR BAR SPACING	X
18-9	9	1⅜"	1 1/16"
24-9	9	2"	1 9/16"
24-12	12	1⅜"	1¼"

INLET TYPE	COVER TYPE	WEIGHT LB
OS	PLATE	174
OL-7	PLATE	170
OL-10	PLATE	170
OL-14	PLATE	170
OL-21	PLATE	170
OCP	PLATE	112
OCPI	PLATE	112
OCPI	REDWOOD	42
OMP	PLATE	177
OMPI	PLATE	177

INLET TYPE	GRATE TYPE	No. OF GRATES	WEIGHT LB
GDO	24-12	2	634
GOL-7	24-12	1	326
GOL-10	24-12	1	326
GO,G1,G2,G3,G4 (TYPE 24)	24-9	1	263
	24-12	1	326
G4 (TYPE 18),G5,G6	18-9	1	249
GT1	18-9	2	498
GT2	18-9	2	498
GT3	24-12	2	652
GT4	24-12	2	652
TRASH RACK			22
GRATE CHAIN			3

BASIS FOR Misc IRON & STEEL FINAL PAY WEIGHTS FOR DRAINAGE INLETS

(See Note 7)

STATE OF CALIFORNIA
DEPARTMENT OF TRANSPORTATION

GRATE DETAILS No. 1

NO SCALE

RSP D77A DATED APRIL 19, 2013 SUPERSEDES RSP D77A DATED JULY 20, 2012 AND STANDARD PLAN D77A DATED MAY 20, 2011 - PAGE 164 OF THE STANDARD PLANS BOOK DATED 2010.

REVISED STANDARD PLAN RSP D77A

2010 REVISED STANDARD PLAN RSP D77A

4-4-13

Dist	COUNTY	ROUTE	POST MILES TOTAL PROJECT	SHEET No.	TOTAL SHEETS
01	Men	101	3.8, 5.3	50	99

Raymond Don Tsztoo
REGISTERED CIVIL ENGINEER

April 19, 2013
PLANS APPROVAL DATE

REGISTERED PROFESSIONAL ENGINEER Raymond Don Tsztoo No. C37332 Exp. 6-30-14 CIVIL STATE OF CALIFORNIA

THE STATE OF CALIFORNIA OR ITS OFFICERS OR AGENTS SHALL NOT BE RESPONSIBLE FOR THE ACCURACY OR COMPLETENESS OF SCANNED COPIES OF THIS PLAN SHEET.

TO ACCOMPANY PLANS DATED 3-28-16

2010 REVISED STANDARD PLAN RSP D77B

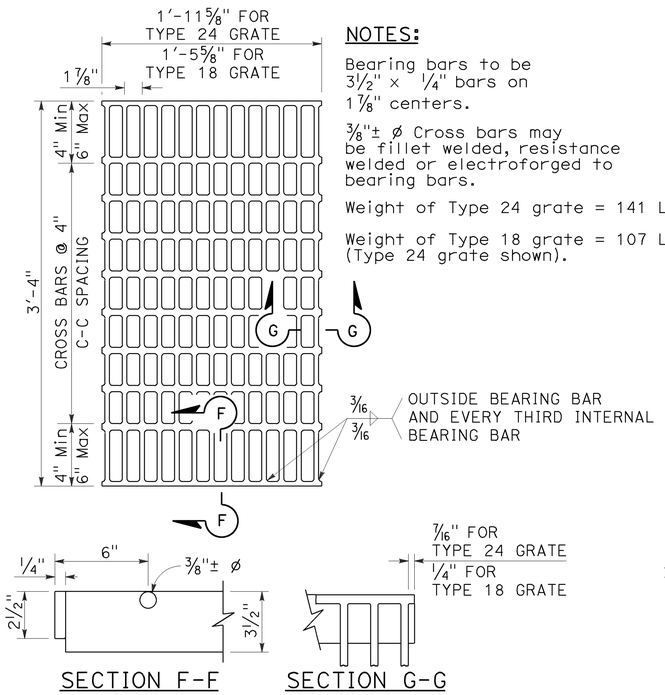

SECTION F-F SECTION G-G

TYPE 18-10 AND 24-13 GRATE

(Welded Steel)

NOTES:

Bearing bars to be 3½" × ¼" bars on 1⅞" centers.

⅜"± ø Cross bars may be fillet welded, resistance welded or electroforged to bearing bars.

Weight of Type 24 grate = 141 LBS.

Weight of Type 18 grate = 107 LBS. (Type 24 grate shown).

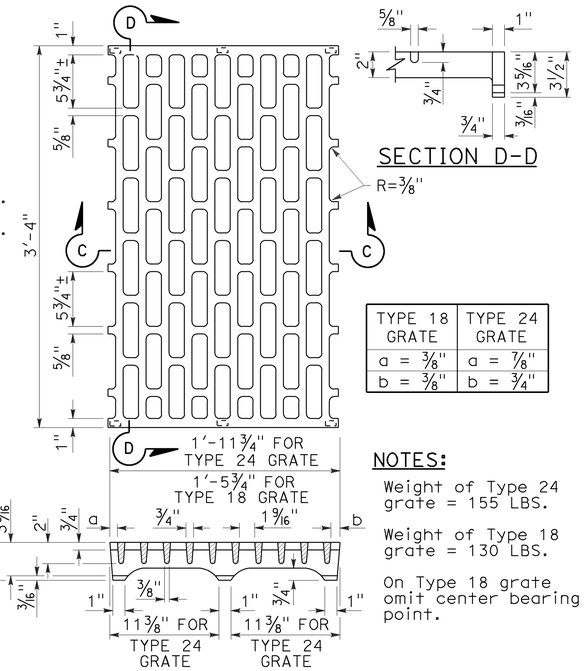

SECTION D-D

TYPE 18 GRATE	TYPE 24 GRATE
a = ⅜"	a = ⅞"
b = ⅜"	b = ¾"

SECTION C-C

NOTES:

Weight of Type 24 grate = 155 LBS.

Weight of Type 18 grate = 130 LBS.

On Type 18 grate omit center bearing point.

TYPE 18-8C AND 24-10C GRATE

(Cast ductile iron)

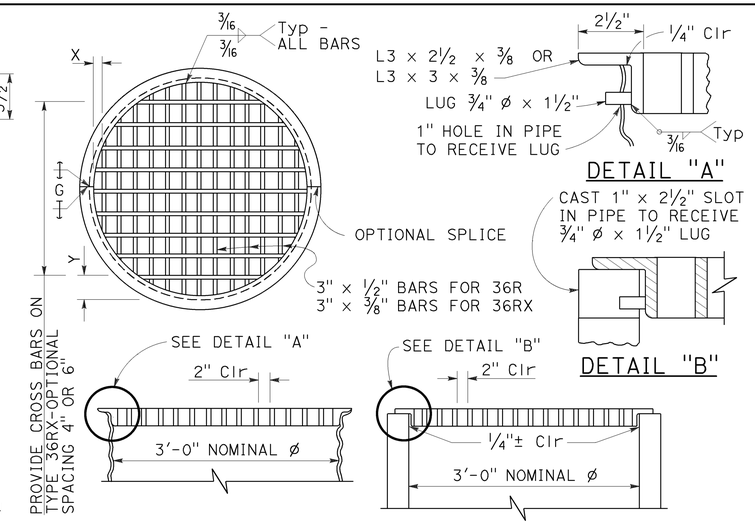

DETAIL "A"

DETAIL "B"

TYPE 36R AND 36RX GRATE DETAILS

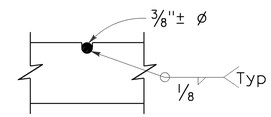

⅜"± ø Cross bars may be fillet welded, resistance welded or electroforged to bearing bars.

CROSS BAR DETAIL TYPE 36RX GRATE (WELDED STEEL)

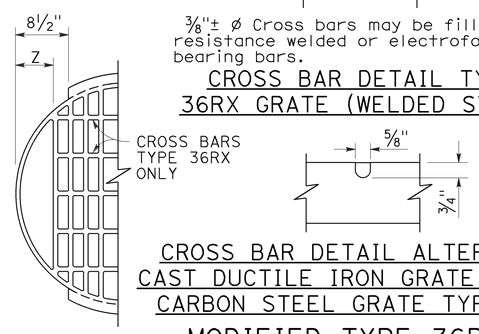

CROSS BAR DETAIL ALTERNATIVE CAST DUCTILE IRON GRATE OR CAST CARBON STEEL GRATE TYPE 36RX

MODIFIED TYPE 36R AND 36RX GRATE FOR ODI INLET

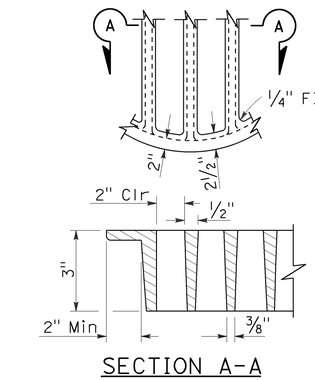

SECTION A-A

ALTERNATIVE CAST DUCTILE IRON GRATE OR CAST CARBON STEEL GRATE TYPE 36R AND 36RX

BASIS FOR Misc IRON AND STEEL FINAL PAY WEIGHTS FOR DRAINAGE INLETS

INLET TYPE	GRATE TYPE	No. OF GRATES	WEIGHT LB
GDO (SEE NOTE 4)	24-10C	2	391
	24-10S	2	456
	24-12X	2	473
	24-13	2	374
GO,GOL,G1,G2, G3,G4 (TYPE 24)	24-10C	1	202
	24-10S	1	229
	24-12X	1	239
	24-13	1	188
G4 (TYPE 18) G5,G6	18-8S	1	187
	18-9X	1	187
	18-10	1	149
GT1,GT2	18-8S	2	374
	18-9X	2	374
	18-10	2	298
GT3,GT4	24-10C	2	404
	24-10S	2	458
	24-12X	2	478
	24-13	2	376
ODI	36RX (Mod)	1	196
GMP,GCP,GCPI	36RX	1	215
ODI	36R (Mod)	1	220
GMP,GCP,GCPI	36R	1	236
TRASH RACK			22
GRATE CHAIN			3

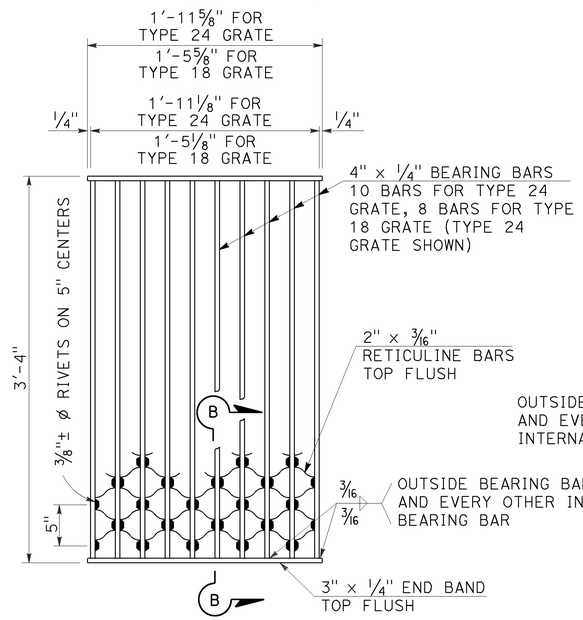

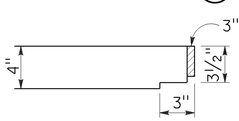

NOTES:

Weight of Type 24 grate = 182 LBS.
Weight of Type 18 grate = 145 LBS.

SECTION B-B

TYPE 18-8S AND 24-10S GRATE

(Welded Steel) Reticuline type

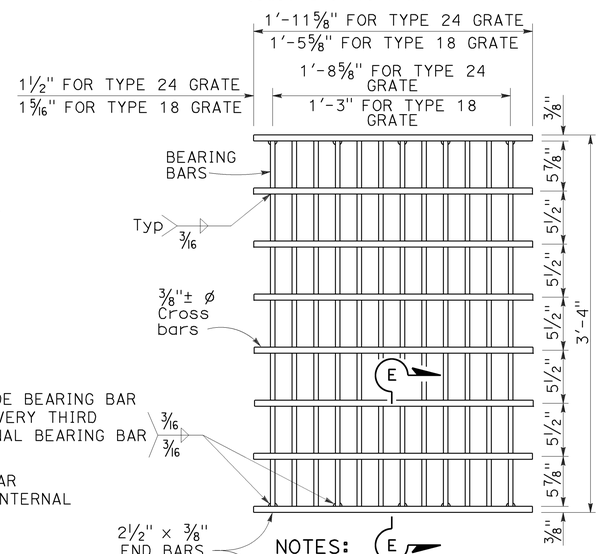

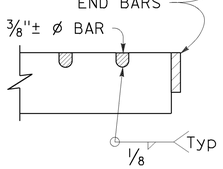

SECTION E-E

NOTES:

Bearing bars to be 3½" × ⅜" bars on 1⅞" centers.

12 Bars for Type 24 grate - 9 bars for Type 18 grates. (Type 24 grate shown).

Weight of Type 24 grate = 192 LBS.

Weight of Type 18 grate = 145 LBS.

⅜"± ø Cross bars may be fillet welded, resistance welded or electroforged to bearing bars.

TYPE 18-9X AND 24-12X GRATE

(Welded Steel)

NOTES:

1. When alternative grates are allowed - Final pay based on alternative with the lesser weight.
2. Use frame shown on Standard Plan D74A, D74B or RSP D77A as appropriate.
3. When Type 24-10S, 24-12X or 24-13 grates are used with GDO Inlets, a ¼" × 3½" × 3'-4⅞" steel bar shall be welded across the center of inlet frame to separate the individual grates.
4. See Revised Standard Plan RSP D77A for connecting chain to welded grate and frame. When chain is required, do not use cast ductile iron grate.

GRATE BAR SPACING TABLE

TYPE	No. OF BARS	CLEAR BAR SPACING	X	Y 4" SPACING	Y 6" SPACING	Z
36R	13	2"	2⅛"	-	-	-
36RX (STEEL)	15	2"	9/16"	3¾"	5¾"	-
36RX (CAST)	13	2"	2⅛"	3¾"	5¾"	-
36R Mod	12	2"	2⅛"	-	-	5"
36RX Mod (STEEL)	13	2"	9/16"	3¾"	5¾"	5 11/16"
36RX Mod (CAST)	12	2"	2⅛"	3¾"	5¾"	5"

STATE OF CALIFORNIA
DEPARTMENT OF TRANSPORTATION

GRATE DETAILS No. 2

NO SCALE

RSP D77B DATED APRIL 19, 2013 SUPERSEDES RSP D77B DATED JULY 20, 2012 AND STANDARD PLAN D77B DATED MAY 20, 2011 - PAGE 165 OF THE STANDARD PLANS BOOK DATED 2010.

REVISED STANDARD PLAN RSP D77B

4-4-13

Dist	COUNTY	ROUTE	POST MILES TOTAL PROJECT	SHEET No.	TOTAL SHEETS
01	Men	101	3.8, 5.3	51	99

Gregory A. Balzer
LICENSED LANDSCAPE ARCHITECT

July 19, 2013
PLANS APPROVAL DATE

THE STATE OF CALIFORNIA OR ITS OFFICERS OR AGENTS SHALL NOT BE RESPONSIBLE FOR THE ACCURACY OR COMPLETENESS OF SCANNED COPIES OF THIS PLAN SHEET.

LICENSED LANDSCAPE ARCHITECT — Gregory A. Balzer 2576 — Gregory A. Balzer — 02-28-15 Renewal Date — 7-19-13 Date — STATE OF CALIFORNIA

TO ACCOMPANY PLANS DATED 3-28-16

A

AB	AGGREGATE BASE
ABS	ACRYLONITRILE-BUTADIENE-STYRENE
AC	ASPHALT CONCRETE
ACC	ARMOR-CLAD CONDUCTORS
Adj	ADJACENT/ADJUSTABLE
AIC	AUXILIARY IRRIGATION CONTROLLER
Alt	ALTERNATIVE
AMEND	AMENDMENT
ARV	AIR RELEASE VALVE
AUTO	AUTOMATIC
AUX	AUXILIARY
AVB	ATMOSPHERIC VACUUM BREAKER

B

B&B	BALLED AND BURLAPPED
B/B	BRASS/BRONZE
B/B/PL	BRASS/BRONZE/PLASTIC
B/PL	BRASS/PLASTIC
BFM	BONDED FIBER MATRIX
Bit Ctd	BITUMINOUS COATED
BP	BOOSTER PUMP
BPA	BACKFLOW PREVENTER ASSEMBLY
BPE	BACKFLOW PREVENTER ENCLOSURE
BV	BALL VALVE

C

C	CONDUIT
CAP	CORRUGATED ALUMINUM PIPE
CARV	COMBINATION AIR RELEASE VALVE
CB	COUPLING BAND
CCA	CAM COUPLER ASSEMBLY
CEC	CONTROLLER ENCLOSURE CABINET
CHDPE	CORRUGATED HIGH DENSITY POLYETHYLENE
CL	CHAIN LINK
CNC	CONTROL AND NEUTRAL CONDUCTORS
Conc	CONCRETE
CP	COPPER PIPE
CS	COMPOST SOCK
CSP	CORRUGATED STEEL PIPE
CST	CENTER STRIP
CV	CHECK VALVE

D

Dia	DIAMETER
DIP	DUCTILE IRON PIPE
DIT	DRIP IRRIGATION TUBING
DG	DECOMPOSED GRANITE
DN	DIAMETER NOMINAL
DVA	DRIP VALVE ASSEMBLY

E

EC	EROSION CONTROL
ECTC	EROSION CONTROL TECHNOLOGY COUNCIL
Elect	ELECTRIC/ELECTRICAL
Elev	ELEVATION
ELL	ELBOW
ENCL	ENCLOSURE
EP	EDGE OF PAVEMENT
ES	EDGE OF SHOULDER
EST	END STRIP
ESTB	ESTABLISHMENT
ETW	EDGE OF TRAVELED WAY

F

F	FULL CIRCLE
F/P	FULL/PART CIRCLE
FCV	FLOW CONTROL VALVE
FERT	FERTILIZER
FG	FINISHED GRADE
FH	FLEXIBLE HOSE
FIPT	FEMALE IRON PIPE THREAD
FIS	FERTILIZER INJECTOR SYSTEM
FL	FLOW LINE
FR	FIBER ROLL
FS	FLOW SENSOR
FSC	FLOW SENSOR CABLE
FV	FLUSH VALVE

G

Galv	GALVANIZED
GARV	GARDEN VALVE
GARVA	GARDEN VALVE ASSEMBLY
GM	GRAVEL MULCH
GPH	GALLONS PER HOUR
GPM	GALLONS PER MINUTE
GSP	GALVANIZED STEEL PIPE
GV	GATE VALVE

H

H	HALF CIRCLE
HDPE	HIGH DENSITY POLYETHYLENE
HP	HORSEPOWER/HINGE POINT
HPL	HIGH PRESSURE LINE
Hwy	HIGHWAY

I

IC	IRRIGATION CONTROLLER
ICC	IRRIGATION CONTROLLER(S) IN CONTROLLER ENCLOSURE CABINET
ID	INSIDE DIAMETER
IFS	IRRIGATION FILTRATION SYSTEM
IPS	IRON PIPE SIZE
IPT	IRON PIPE THREAD
Irr	IRRIGATION

L

L	LENGTH

M

Max	MAXIMUM
MBGR	METAL BEAM GUARD RAILING
MCV	MANUAL CONTROL VALVE
MIC	MASTER IRRIGATION CONTROLLER
Min	MINIMUM
MIPT	MALE IRON PIPE THREAD
Misc	MISCELLANEOUS
Mtl	MATERIAL
MVP	MAINTENANCE VEHICLE PULLOUT

N

NCN	NO COMMON NAME
NL	NOZZLE LINE
No.	NUMBER
NPT	NATIONAL PIPE THREAD

O

O/C	ON CENTER
OD	OUTSIDE DIAMETER
OL	OVERLAP

P

P	PART CIRCLE
PB	PULL BOX
PCC	PORTLAND CEMENT CONCRETE
PE	POLYETHYLENE
Pkt	PACKET
PL	PLASTIC
PLS	PURE LIVE SEED
PLT	PLANT/PLANTING
PLT ESTB	PLANT ESTABLISHMENT
PM	POST MILE
PR	PRESSURE RATED
PRLV	PRESSURE RELIEF VALVE
PRV	PRESSURE REGULATING VALVE
PVC	POLYVINYL CHLORIDE
Pvmt	PAVEMENT

Q

Q	QUARTER CIRCLE
QCV	QUICK COUPLING VALVE

R

R	RADIUS
RCP	REINFORCED CONCRETE PIPE
RCV	REMOTE CONTROL VALVE
RCVM	REMOTE CONTROL VALVE (MASTER)
RCVMF	REMOTE CONTROL VALVE (MASTER) W/FLOW SENSOR
RCVP	REMOTE CONTROL VALVE W/PRESSURE REGULATOR
RCW	RECYCLED WATER
RECP	ROLLED EROSION CONTROL PRODUCT
REQ	REQUIRED
RICS	REMOTE IRRIGATION CONTROL SYSTEM
R/W	RIGHT OF WAY

S

S	SLIP
SCH	SCHEDULE
SF	STATE-FURNISHED
Shld	SHOULDER
Sq	SQUARE
SST	SIDE STRIP
Sta	STATION
Std	STANDARD
SW	SIDEWALK/SOUND WALL

T

T	THIRD CIRCLE/THREAD
TLS	TRUCK LOADING STANDPIPE
TQ	THREE QUARTER CIRCLE
TRM	TURF REINFORCEMENT MAT
TT	TWO-THIRDS CIRCLE
TWSA	TREE WELL SPRINKLER ASSEMBLY
Typ	TYPICAL

U

UG	UNDERGROUND

W

W	WIDTH
W/	WITH
WM	WATER METER
WS	WYE STRAINER
WSA	WYE STRAINER ASSEMBLY
WSP	WELDED STEEL PIPE
WWM	WELDED WIRE MESH

NOTE:

For additional abbreviations, see Standard Plans A10A and A10B.

STATE OF CALIFORNIA
DEPARTMENT OF TRANSPORTATION

LANDSCAPE AND EROSION CONTROL ABBREVIATIONS

NO SCALE

RSP H1 DATED JULY 19, 2013 SUPERSEDES STANDARD PLAN H1 DATED MAY 20, 2011 - PAGE 218 OF THE STANDARD PLANS BOOK DATED 2010.

REVISED STANDARD PLAN RSP H1

2010 REVISED STANDARD PLAN RSP H1

6-28-13

Dist	COUNTY	ROUTE	POST MILES TOTAL PROJECT	SHEET No.	TOTAL SHEETS
01	Men	101	3.8, 5.3	52	99

LICENSED LANDSCAPE ARCHITECT

November 15, 2013
PLANS APPROVAL DATE

Gregory A. Balzer 2576 LICENSED LANDSCAPE ARCHITECT STATE OF CALIFORNIA
02-28-15 (Renewal) Date
11-15-13 Date

THE STATE OF CALIFORNIA OR ITS OFFICERS OR AGENTS SHALL NOT BE RESPONSIBLE FOR THE ACCURACY OR COMPLETENESS OF SCANNED COPIES OF THIS PLAN SHEET.

TO ACCOMPANY PLANS DATED 3-28-16

EXISTING	NEW	ITEM DESCRIPTION
		WATER METER (WM)
		BACKFLOW PREVENTER ASSEMBLY (BPA)
		BACKFLOW PREVENTER ENCLOSURE (BPE)
		BOOSTER PUMP (BP)
		TRUCK LOADING STANDPIPE (TLS)
	FS	FLOW SENSOR (FS)
		MASTER IRRIGATION CONTROLLER (MIC)
		AUXILIARY IRRIGATION CONTROLLER (AIC)
		IRRIGATION CONTROLLER (IC) IRRIGATION CONTROLLER (IC) (BATTERY) IRRIGATION CONTROLLER (IC) (SOLAR) IRRIGATION CONTROLLER (IC) (TWO WIRE) IRRIGATION CONTROLLER(S) IN CONTROLLER ENCLOSURE CABINET (ICC)
acc	ACC	ARMOR-CLAD CONDUCTORS (ACC)
cnc	CNC	CONTROL AND NEUTRAL CONDUCTORS (CNC)
		IRRIGATION CONDUIT
		EXTEND IRRIGATION CONDUIT
dip	DIP	DUCTILE IRON PIPE (SUPPLY LINE) (MAIN) (DIP)
		GALVANIZED STEEL PIPE (SUPPLY LINE) (MAIN) (GSP)
		GALVANIZED STEEL PIPE (SUPPLY LINE) (LATERAL) (GSP)
		PLASTIC PIPE (SUPPLY LINE) (MAIN)
		PLASTIC PIPE (SUPPLY LINE) (LATERAL)
cp	CP	COPPER PIPE (SUPPLY LINE)
dit	DIT	DRIP IRRIGATION TUBING
		REMOTE CONTROL VALVE (RCV) REMOTE CONTROL VALVE (MASTER) (RCVM) REMOTE CONTROL VALVE (MASTER) W/FLOW METER (RCVMF)
P	P	REMOTE CONTROL VALVE W/PRESSURE REGULATOR (RCVP)
		EXISTING MANUAL CONTROL VALVE (MCV)
V	V	DRIP VALVE ASSEMBLY (DVA)
Y	Y	WYE STRAINER ASSEMBLY (WSA)

EXISTING	NEW	ITEM DESCRIPTION
		GATE VALVE (GV)
		BALL VALVE (BV)
		QUICK COUPLING VALVE (QCV)
		CAM COUPLER ASSEMBLY (CCA)
		GARDEN VALVE ASSEMBLY (GARVA)
		PRESSURE REGULATING VALVE (PRV)
		PRESSURE RELIEF VALVE (PRLV)
		FLOW CONTROL VALVE (FCV)
		COMBINATION AIR RELEASE VALVE (CARV)
		CHECK VALVE (CV)
		FLUSH VALVE (FV)
		EXISTING NOZZLE LINE W/TURNING UNION
		EXISTING IRRIGATION SYSTEM
		EXISTING IRRIGATION SYSTEM TO BE REMOVED
		CHAIN LINK GATE
		QUICK COUPLING VALVE W/SPRINKLER PROTECTOR
3	3	SPRINKLER W/SPRINKLER PROTECTOR
	C	CONNECT TO EXISTING SYSTEM
		CAP
		CAP EXISTING
	\\\FR\\\	FIBER ROLL
	\\\CS\\\	COMPOST SOCK

RCV SIZE
IRRIGATION CONTROLLER
CONTROLLER STATION
VALVE IN PARALLEL (IF APPLICABLE)
GPM
QUANTITY OF SPRINKLERS (WHEN SHOWN)

* 2½"-A-2b-40-60

VALVE CODE

* VALVE CODES FOR EXISTING VALVES ARE SHOWN IN A DASHED ENCLOSURE.

STATE OF CALIFORNIA
DEPARTMENT OF TRANSPORTATION

LANDSCAPE AND EROSION CONTROL SYMBOLS

NO SCALE

RSP H2 DATED NOVEMBER 15, 2013 SUPERSEDES RSP H2 DATED JULY 19, 2013 AND STANDARD PLAN H2 DATED MAY 20, 2011 - PAGE 219 OF THE STANDARD PLANS BOOK DATED 2010.

REVISED STANDARD PLAN RSP H2

2010 REVISED STANDARD PLAN RSP H2

10-9-13

Dist	COUNTY	ROUTE	POST MILES TOTAL PROJECT	SHEET No.	TOTAL SHEETS
01	Men	101	3.8, 5.3	53	99

Gregory A. Balzer
LICENSED LANDSCAPE ARCHITECT

July 19, 2013
PLANS APPROVAL DATE

LICENSED LANDSCAPE ARCHITECT
Gregory A. Balzer 2576
Gregory A. Balzer
02-28-15
Renewal Date
7-19-13
Date
STATE OF CALIFORNIA

THE STATE OF CALIFORNIA OR ITS OFFICERS OR AGENTS SHALL NOT BE RESPONSIBLE FOR THE ACCURACY OR COMPLETENESS OF SCANNED COPIES OF THIS PLAN SHEET.

TO ACCOMPANY PLANS DATED 3-28-16

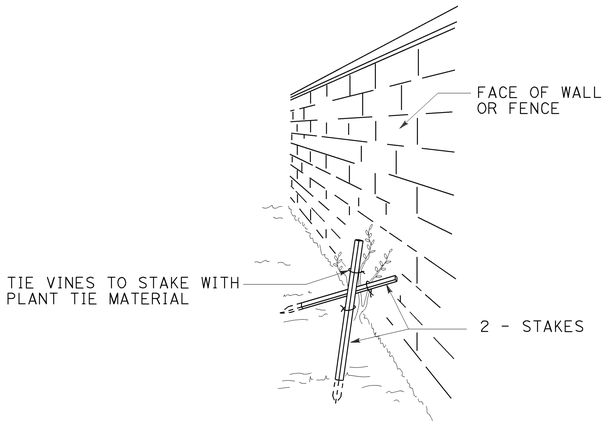

PERSPECTIVE
VINE STAKING

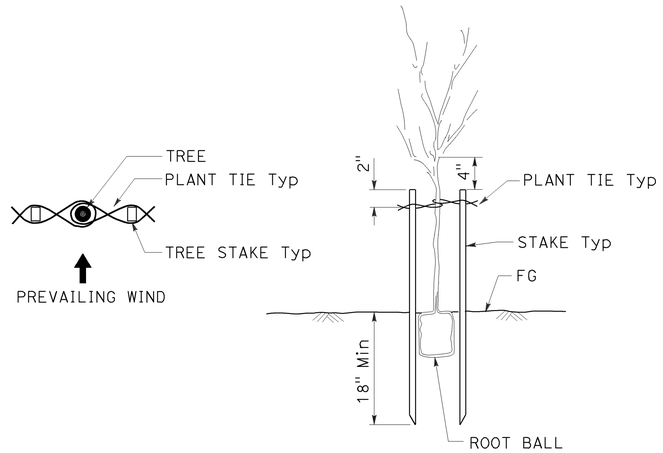

TREE STAKING

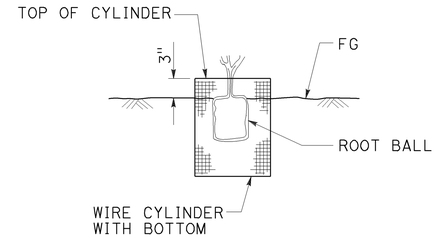

SECTION
ROOT PROTECTOR

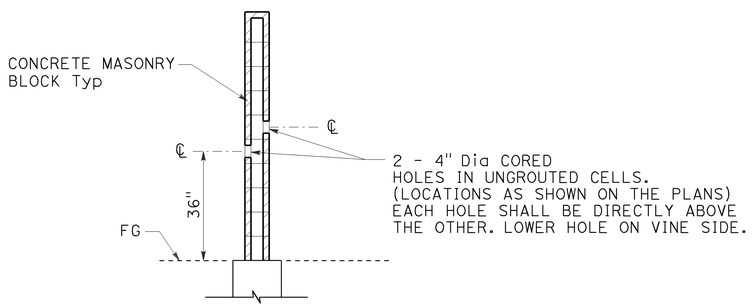

SECTION
CORE HOLE (VINE)

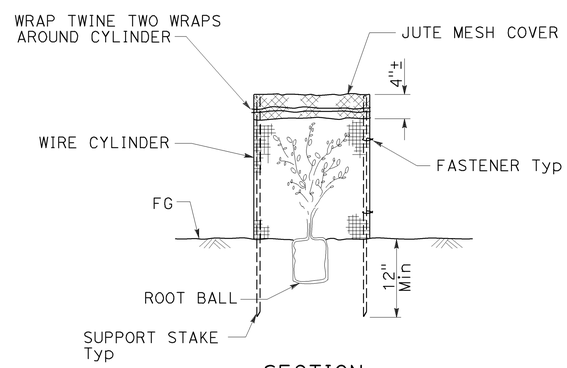

SECTION
FOLIAGE PROTECTOR

STATE OF CALIFORNIA
DEPARTMENT OF TRANSPORTATION

LANDSCAPE DETAILS

NO SCALE

RSP H4 DATED JULY 19, 2013 SUPERSEDES STANDARD PLAN H4
DATED MAY 20, 2011 - PAGE 221 OF THE STANDARD PLANS BOOK DATED 2010.

REVISED STANDARD PLAN RSP H4

2010 REVISED STANDARD PLAN RSP H4

6-28-13

Dist	COUNTY	ROUTE	POST MILES TOTAL PROJECT	SHEET No.	TOTAL SHEETS
01	Men	101	3.8, 5.3	54	99

LICENSED LANDSCAPE ARCHITECT

July 19, 2013
PLANS APPROVAL DATE

THE STATE OF CALIFORNIA OR ITS OFFICERS OR AGENTS SHALL NOT BE RESPONSIBLE FOR THE ACCURACY OR COMPLETENESS OF SCANNED COPIES OF THIS PLAN SHEET.

LICENSED LANDSCAPE ARCHITECT — Gregory A. Balzer — 2576 — 02-28-15 Renewal Date — 7-19-13 Date — STATE OF CALIFORNIA

TO ACCOMPANY PLANS DATED 3-28-16

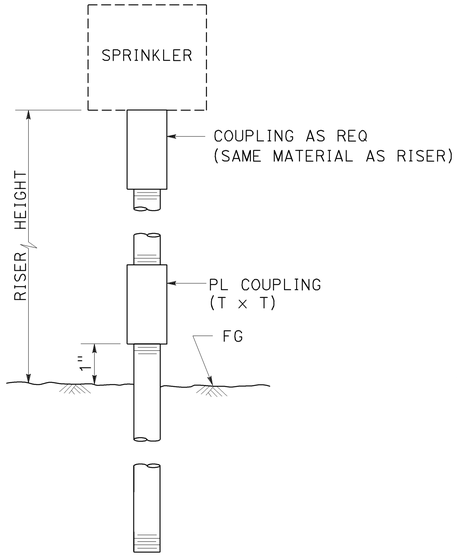

ELEVATION

RISER SPRINKLER ASSEMBLY TYPE I

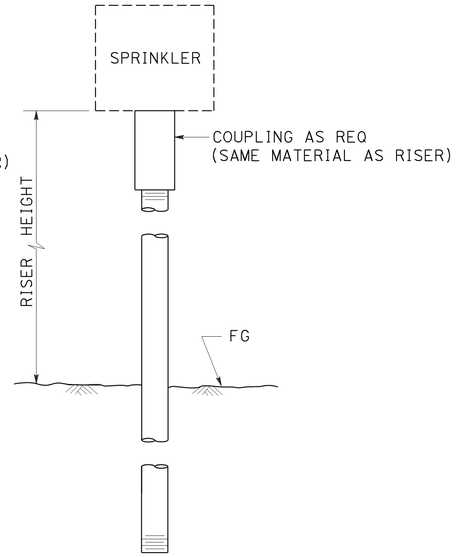

ELEVATION

RISER SPRINKLER ASSEMBLY TYPE II

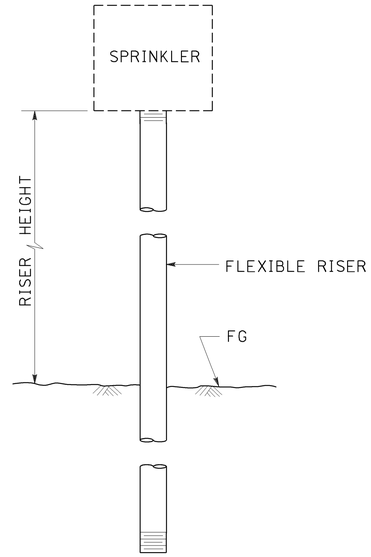

ELEVATION

RISER SPRINKLER ASSEMBLY TYPE III

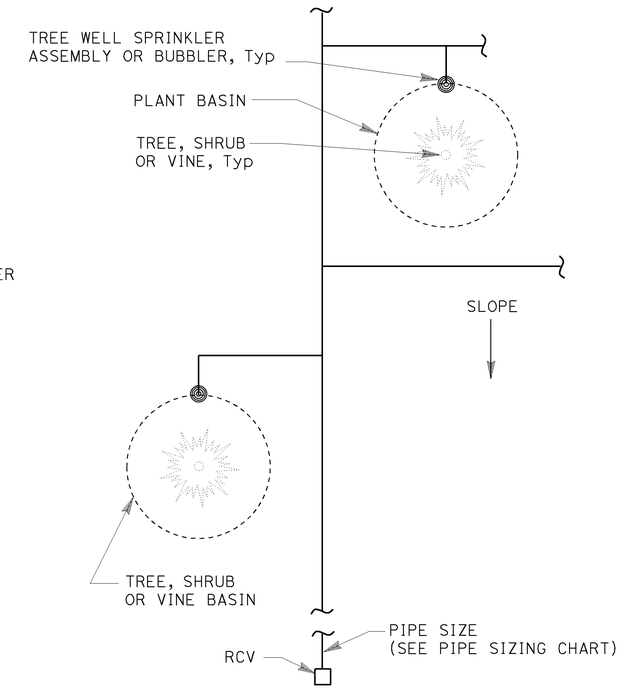

PLAN

NOTES:

1. Install tree well sprinkler assembly on up-hill side of plant when on slope.
2. Install bubbler within basin.

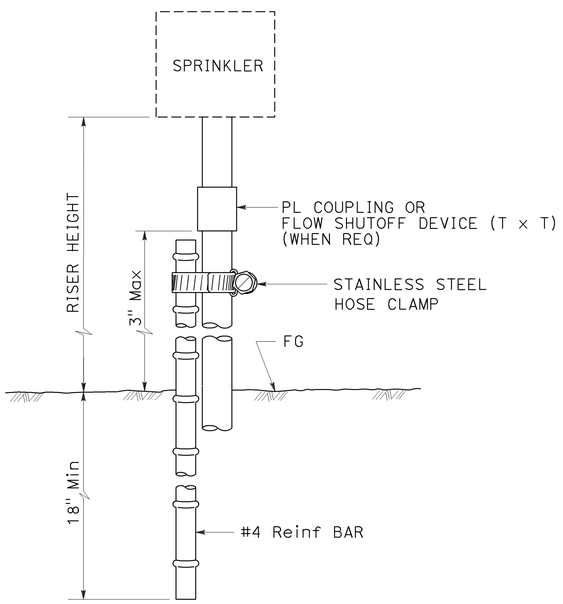

ELEVATION

RISER SPRINKLER ASSEMBLY TYPE IV

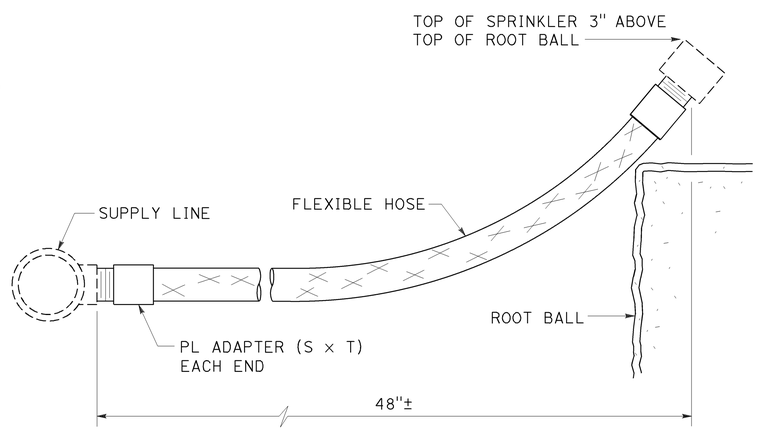

ELEVATION

RISER SPRINKLER ASSEMBLY TYPE V

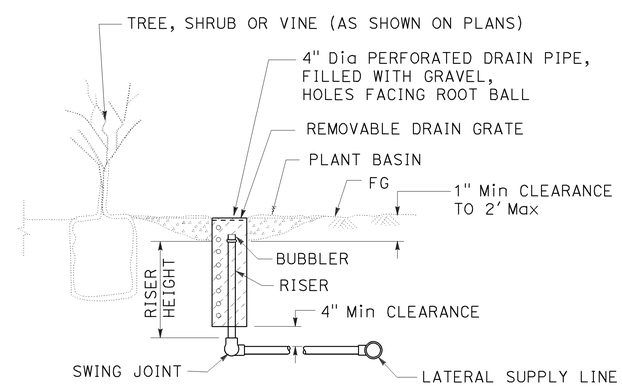

SECTION

TREE WELL SPRINKLER ASSEMBLY

STATE OF CALIFORNIA
DEPARTMENT OF TRANSPORTATION

LANDSCAPE DETAILS

NO SCALE

RSP H5 DATED JULY 19, 2013 SUPERSEDES STANDARD PLAN H5
DATED MAY 20, 2011 - PAGE 222 OF THE STANDARD PLANS BOOK DATED 2010.

REVISED STANDARD PLAN RSP H5

2010 REVISED STANDARD PLAN RSP H5

6-28-13

Dist	COUNTY	ROUTE	POST MILES TOTAL PROJECT	SHEET No.	TOTAL SHEETS
01	Men	101	3.8, 5.3	55	99

Gregory A. Balzer
LICENSED LANDSCAPE ARCHITECT

July 19, 2013
PLANS APPROVAL DATE

LICENSED LANDSCAPE ARCHITECT Gregory A. Balzer 2576 STATE OF CALIFORNIA
Gregory A. Balzer
02-28-15
Renewal Date
7-19-13
Date

THE STATE OF CALIFORNIA OR ITS OFFICERS OR AGENTS SHALL NOT BE RESPONSIBLE FOR THE ACCURACY OR COMPLETENESS OF SCANNED COPIES OF THIS PLAN SHEET.

TO ACCOMPANY PLANS DATED 3-28-16

2010 REVISED STANDARD PLAN RSP H6

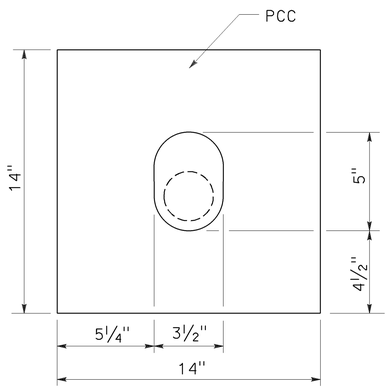

PLAN

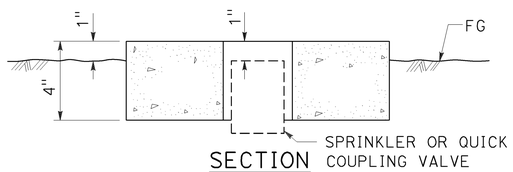

SECTION

SPRINKLER PROTECTOR TYPE I

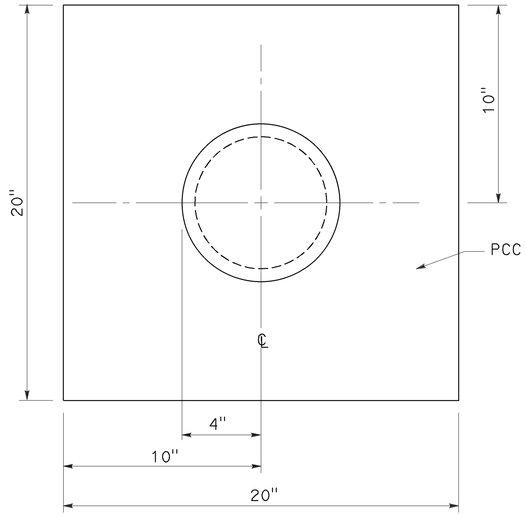

PLAN

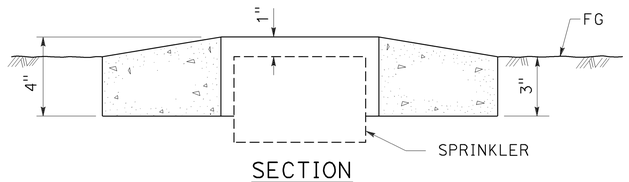

SECTION

SPRINKLER PROTECTOR TYPE II

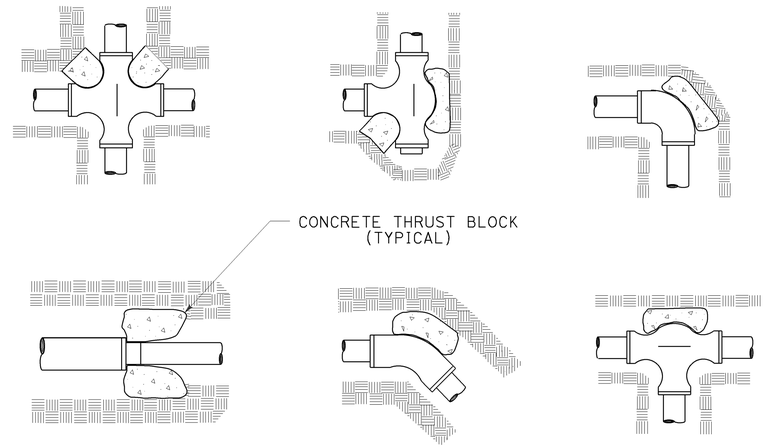

TYPICAL THRUST BLOCKS

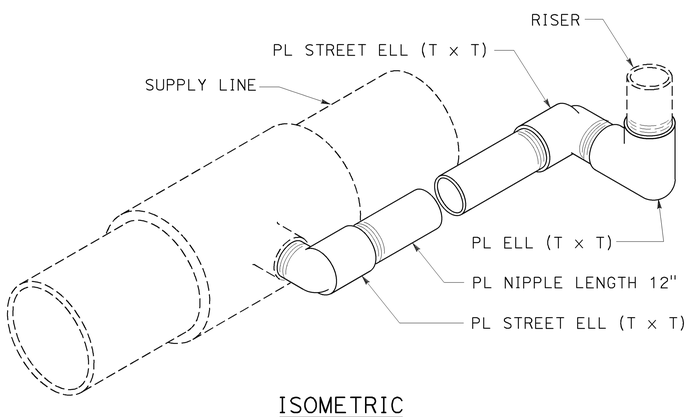

ISOMETRIC

POP-UP SPRINKLER ASSEMBLY TYPE I

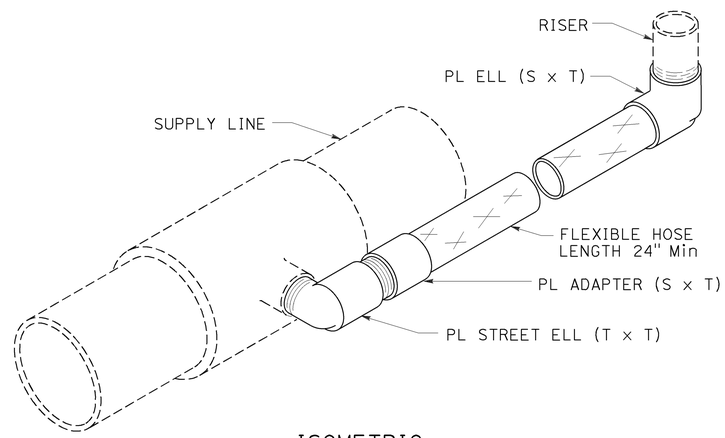

ISOMETRIC

POP-UP SPRINKLER ASSEMBLY TYPE II

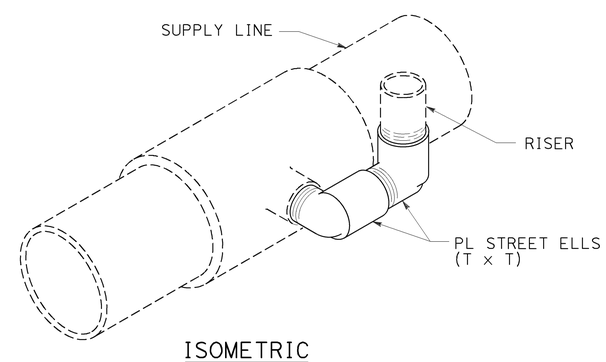

ISOMETRIC

POP-UP SPRINKLER ASSEMBLY TYPE III

STATE OF CALIFORNIA
DEPARTMENT OF TRANSPORTATION

LANDSCAPE DETAILS

NO SCALE

RSP H6 DATED JULY 19, 2013 SUPERSEDES STANDARD PLAN H6
DATED MAY 20, 2011 - PAGE 223 OF THE STANDARD PLANS BOOK DATED 2010.

REVISED STANDARD PLAN RSP H6

6-28-13

Dist	COUNTY	ROUTE	POST MILES TOTAL PROJECT	SHEET No.	TOTAL SHEETS
01	Men	101	3.8, 5.3	56	99

REGISTERED CIVIL ENGINEER

October 30, 2015
PLANS APPROVAL DATE

REGISTERED PROFESSIONAL ENGINEER Srikanth N. Balasubramanian No. C56426 Exp. 6-30-17 CIVIL STATE OF CALIFORNIA

THE STATE OF CALIFORNIA OR ITS OFFICERS OR AGENTS SHALL NOT BE RESPONSIBLE FOR THE ACCURACY OR COMPLETENESS OF SCANNED COPIES OF THIS PLAN SHEET.

TO ACCOMPANY PLANS DATED 3-28-16

ABBREVIATIONS:

TE TAPERED EDGE

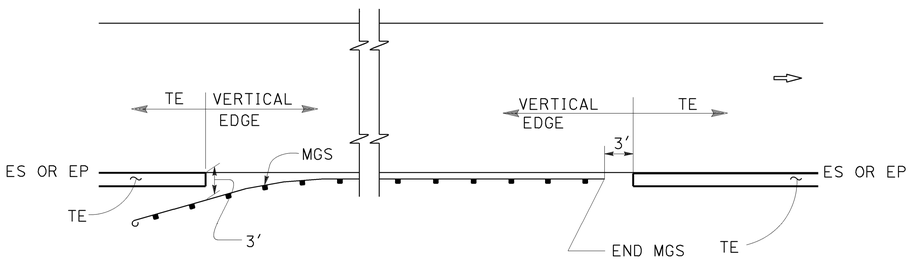

MGS

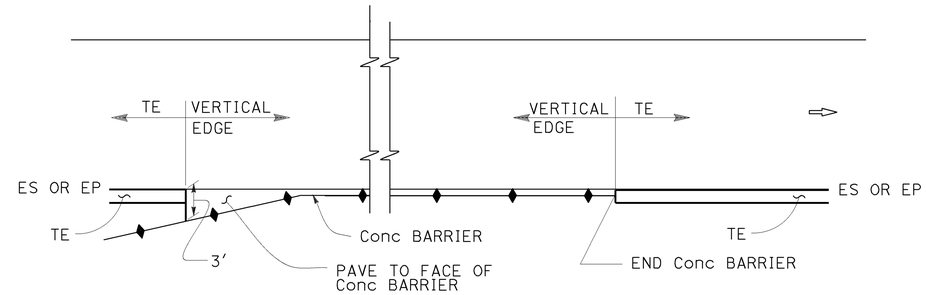

CONCRETE BARRIER

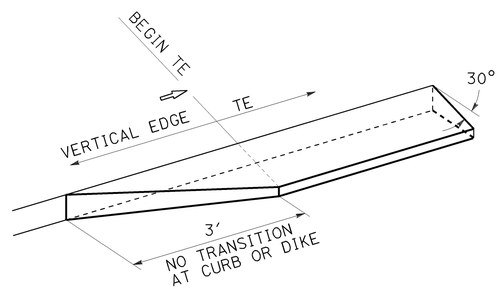

TRANSITION DETAIL FOR CONCRETE ONLY

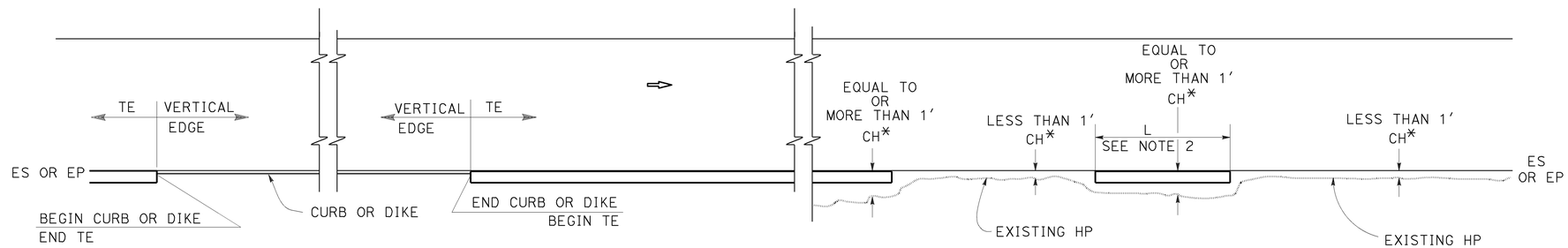

CURB OR DIKE

NARROW SIDE SLOPE

* CH = Distance from ES or EP to existing HP.

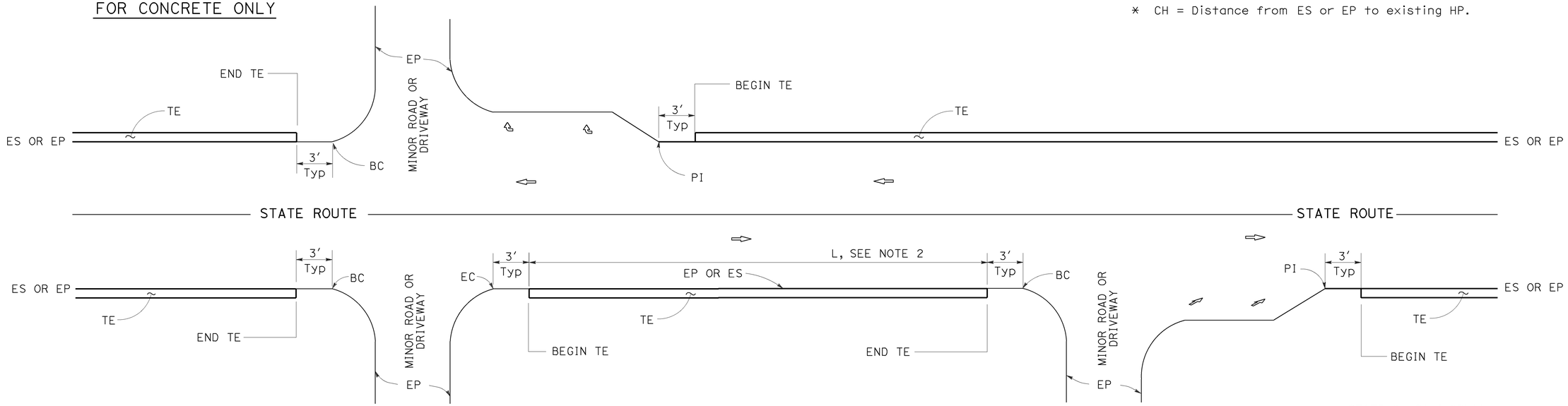

INTERTECTION

DRIVEWAY AND INTERSECTION

MINOR ROADWAY OR DRIVEWAY

STATE OF CALIFORNIA
DEPARTMENT OF TRANSPORTATION

PAVEMENT EDGE TREATMENTS

NO SCALE

NOTES:

1. For details not shown, see Revised Standard Plans RSP P75 and RSP P76.
2. Tapered edge is optional when L is less than 30′.

RSP P74 DATED OCTOBER 30, 2015 SUPERSEDES RSP P74 DATED NOVEMBER 15, 2013 AND RSP P74 DATED JANUARY 20, 2012 THAT SUPPLEMENTS THE STANDARD PLANS BOOK DATED 2010.

REVISED STANDARD PLAN RSP P74

2010 REVISED STANDARD PLAN RSP P74

10-13-15

Dist	COUNTY	ROUTE	POST MILES TOTAL PROJECT	SHEET No.	TOTAL SHEETS
01	Men	101	3.8, 5.3	57	99

REGISTERED CIVIL ENGINEER

October 30, 2015
PLANS APPROVAL DATE

REGISTERED PROFESSIONAL ENGINEER Srikanth N. Balasubramanian No. C56426 Exp. 6-30-17 CIVIL STATE OF CALIFORNIA

THE STATE OF CALIFORNIA OR ITS OFFICERS OR AGENTS SHALL NOT BE RESPONSIBLE FOR THE ACCURACY OR COMPLETENESS OF SCANNED COPIES OF THIS PLAN SHEET.

TO ACCOMPANY PLANS DATED 3-28-16

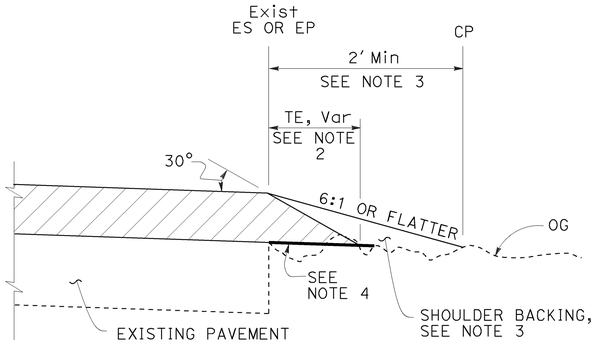

CASE A
Tapered Edge

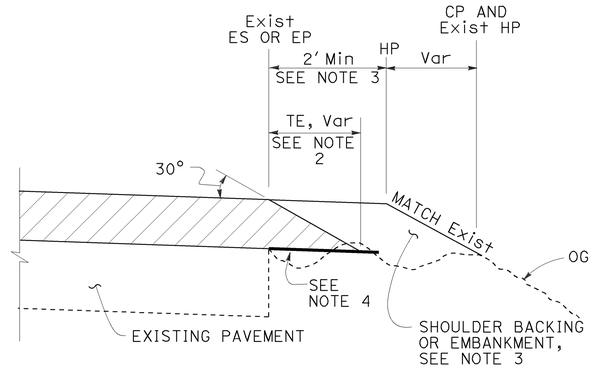

CASE B
Tapered Edge

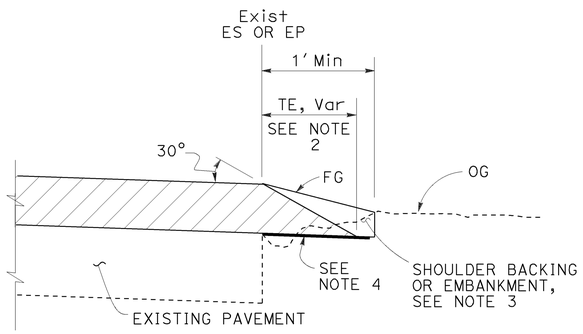

CASE C
Tapered Edge

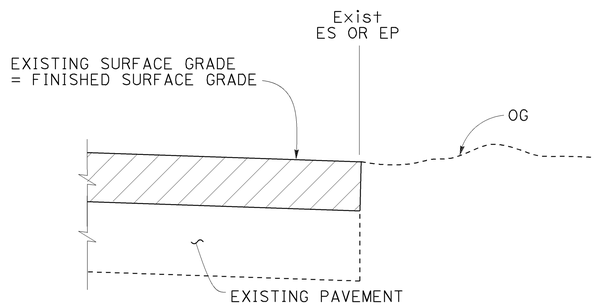

CASE D
Vertical Edge

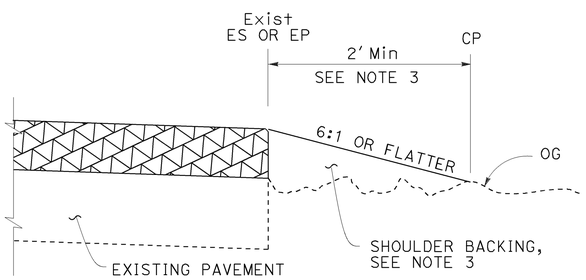

CASE E
Vertical Edge

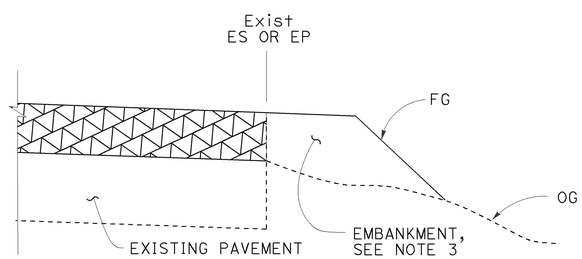

CASE F
Vertical Edge
* See Table A and Revised Std Plan RSP P74

LEGEND:

- HMA OVERLAY
- HMA OR CONCRETE OVERLAY
- CONCRETE OVERLAY

ABBREVIATIONS:

TE TAPERED EDGE
TT TOTAL THICKNESS OF TE

TABLE A
EDGE TREATMENT FOR VARIOUS OVERLAY THICKNESS AND CONDITIONS

	OVERLAY THICKNESS	
FIELD CONDITION	LESS THAN 0.15'	0.15' OR MORE
Exist SLOPE 6:1 OR FLATTER	CASE E	CASE A
Exist SLOPE 3:1 TO 6:1	CASE E	CASE B
Exist SLOPE STEEPER THAN 3:1	CASE F	CASE F
CUT SECTION (REPLACE, COLD PLANE, MILL PAVEMENT)	CASE D	CASE C

ADDITIONAL HMA OR CONCRETE QUANTITIES FOR TE/SIDE/MILE

TYPICAL CROSS SECTION	TT	TOTAL ADDITIONAL MATERIAL FOR TE/SIDE/MILE		
		HMA (TON)	CONCRETE (CY)*	CONCRETE (CY)**
TT	0.15'	7.7	NA	NA
	0.20'	13.7	NA	NA
	0.30'	30.9	NA	NA
	0.40'	54.9	NA	NA
	0.45'	69.4	NA	NA
TT 0.43'	0.50'	84.2	NA	NA
	0.60'	113.9	NA	NA
	0.70'	143.6	70.9	94.2
	0.80'	173.3	85.6	112.2
	0.90'	203.0	100.3	130.2
	1.00'	232.7	114.9	148.2
	1.10'	262.4	129.6	166.2
	1.20'	292.1	144.3	184.2

* For Detail "A"
** For Optional Detail "A"

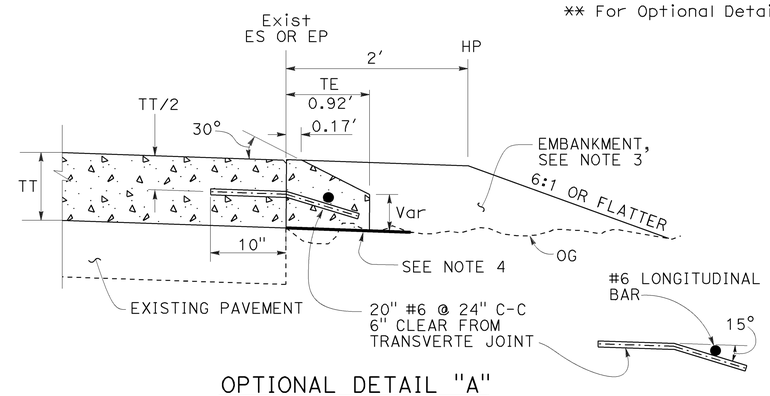

OPTIONAL DETAIL "A"
For concrete overlay
See Note 5

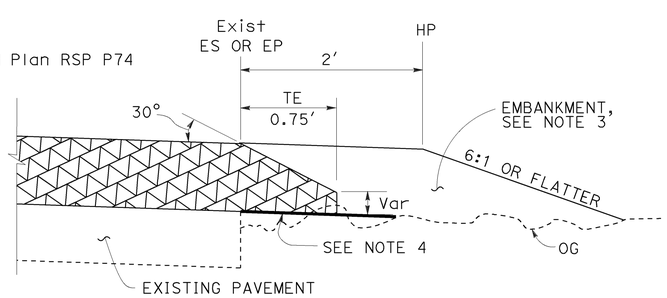

DETAIL "A"
For HMA overlay thickness more than 0.43' or concrete overlay

NOTES:

1. For limits of tapered edge and vertical edge treatments, see Revised Standard Plan RSP P74.
2. Details shown for HMA overlay thickness less than 0.43'. See Detail "A" for HMA overlay thickness more than 0.43' or concrete overlay.
3. For locations and limits of shoulder backing or embankment see project plans.
4. Grade existing ground to place tapered edge. 1' minimum width
5. Tapered edge transverse joint must match overlay transverse joint. End of #6 longitudinal bar must be 2" ±½" clear from transverse joint.
6. Tapered edge is not needed in the area of MGS, barrier, right turn lane and acceleration lane. See Revised Standard Plan RSP P74.

STATE OF CALIFORNIA
DEPARTMENT OF TRANSPORTATION

PAVEMENT EDGE TREATMENTS-OVERLAYS

NO SCALE

RSP P75 DATED OCTOBER 30, 2015 SUPERSEDES RSP P75 DATED NOVEMBER 15, 2013 AND RSP P75 DATED JANUARY 20, 2012 THAT SUPPLEMENTS THE STANDARD PLANS BOOK DATED 2010.

REVISED STANDARD PLAN RSP P75

2010 REVISED STANDARD PLAN RSP P75

7-2-15

Dist	COUNTY	ROUTE	POST MILES TOTAL PROJECT	SHEET No.	TOTAL SHEETS
01	Men	101	3.8, 5.3	58	99

REGISTERED CIVIL ENGINEER

October 30, 2015
PLANS APPROVAL DATE

REGISTERED PROFESSIONAL ENGINEER
Srikanth N. Balasubramanian
No. C56426
Exp. 6-30-17
CIVIL
STATE OF CALIFORNIA

THE STATE OF CALIFORNIA OR ITS OFFICERS OR AGENTS SHALL NOT BE RESPONSIBLE FOR THE ACCURACY OR COMPLETENESS OF SCANNED COPIES OF THIS PLAN SHEET.

TO ACCOMPANY PLANS DATED 3-28-16

LEGEND:

- HMA PAVEMENT
- HMA OR CONCRETE PAVEMENT
- CONCRETE PAVEMENT

ABBREVIATIONS:

TE TAPERED EDGE
TT TOTAL THICKNESS OF TE
HW HINGE WIDTH, DISTANCE FROM ES OR EP TO HP

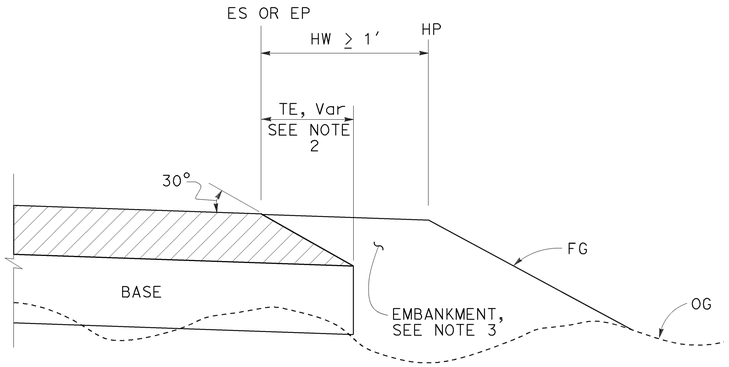

CASE K
Tapered Edge - Fill Section, HW ≥ 1′

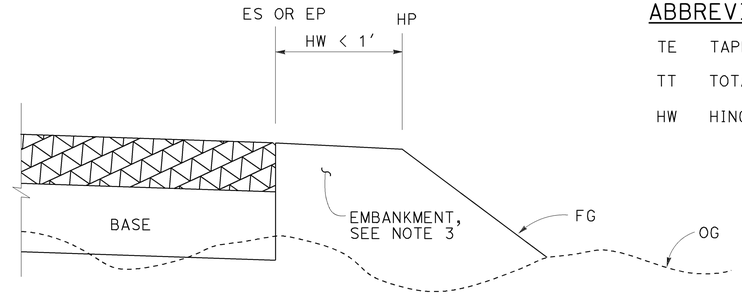

CASE L
Vertical Edge - Fill Section, HW < 1′

FILL SECTION

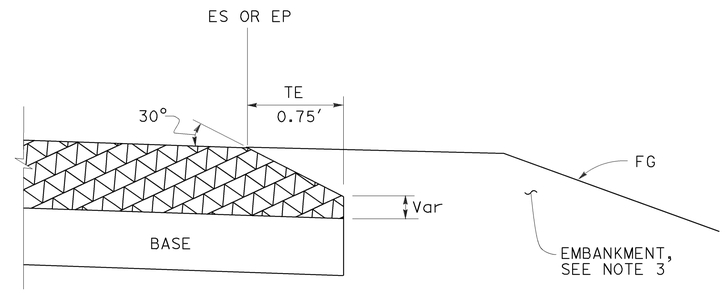

DETAIL "B"
For HMA pavement thickness more than 0.43′ or concrete pavement

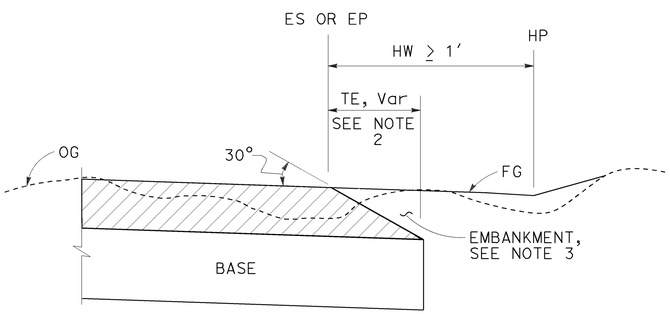

CASE M
Tapered Edge - Cut Section, HW ≥ 1′

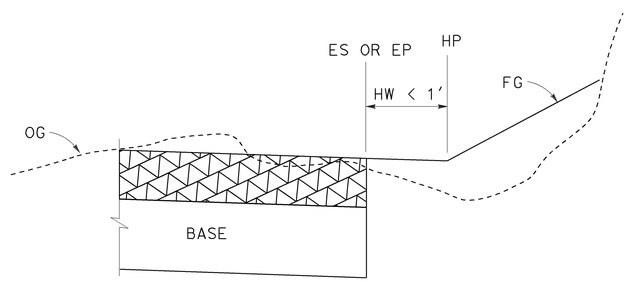

CASE N
Vertical Edge - Cut Section, HW < 1′

CUT SECTION

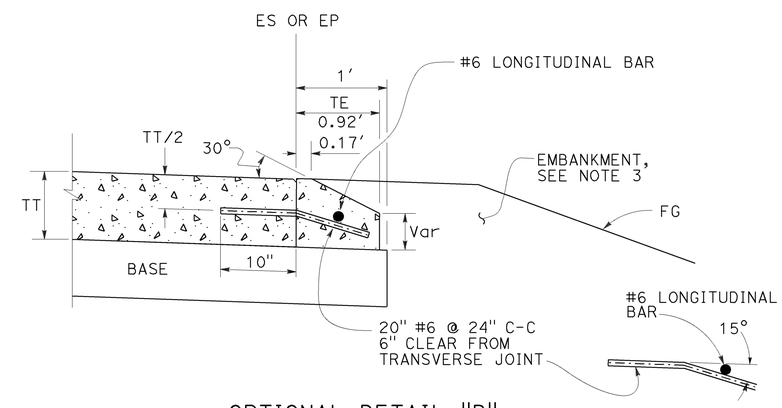

OPTIONAL DETAIL "B"
For concrete pavement
See Note 4

NOTES:

1. For limits of tapered edge and vertical edge treatments, see Revised Standard Plan RSP P74
2. Details shown for HMA pavement thickness less than 0.43′. See Detail "B" for HMA pavement thickness more than 0.43′ or concrete pavement.
3. For locations and limits of embankment see project plans.
4. Tapered edge transverse joint must match pavement transverse joint. End of #6 longitudinal bar must be 2" ±½" clear from transverse joint.
5. Tapered edge is not needed in the area of MGS, barrier, right turn lane and acceleration lane. See Revised Standard Plan RSP P74.

STATE OF CALIFORNIA
DEPARTMENT OF TRANSPORTATION

PAVEMENT EDGE TREATMENTS-NEW CONSTRUCTION

NO SCALE

RSP P76 DATED OCTOBER 30, 2015 SUPERSEDES RSP P76 DATED NOVEMBER 15, 2013 AND RSP P76 DATED JANUARY 20, 2012 THAT SUPPLEMENTS THE STANDARD PLANS BOOK DATED 2010.

REVISED STANDARD PLAN RSP P76

2010 REVISED STANDARD PLAN RSP P76

7-2-15

Dist	COUNTY	ROUTE	POST MILES TOTAL PROJECT	SHEET No.	TOTAL SHEETS
01	Men	101	3.8, 5.3	59	99

REGISTERED CIVIL ENGINEER

July 19, 2013
PLANS APPROVAL DATE

REGISTERED PROFESSIONAL ENGINEER
Gurinderpal Bhullar
No. C48815
Exp. 9-30-14
CIVIL
STATE OF CALIFORNIA

THE STATE OF CALIFORNIA OR ITS OFFICERS OR AGENTS SHALL NOT BE RESPONSIBLE FOR THE ACCURACY OR COMPLETENESS OF SCANNED COPIES OF THIS PLAN SHEET.

TO ACCOMPANY PLANS DATED 3-28-16

2010 REVISED STANDARD PLAN RSP T9

TABLE 1

TAPER LENGTH CRITERIA AND CHANNELIZING DEVICE SPACING

SPEED (S)	MINIMUM TAPER LENGTH * FOR WIDTH OF OFFSET 12 FEET (W)				MAXIMUM CHANNELIZING DEVICE SPACING		
					X	Y	Z **
	TANGENT 2L	MERGING L	SHIFTING L/2	SHOULDER L/3	TAPER	TANGENT	CONFLICT
mph	ft	ft	ft	ft	ft	ft	ft
20	160	80	40	27	20	40	10
25	250	125	63	42	25	50	12
30	360	180	90	60	30	60	15
35	490	245	123	82	35	70	17
40	640	320	160	107	40	80	20
45	1080	540	270	180	45	90	22
50	1200	600	300	200	50	100	25
55	1320	660	330	220	55	110	27
60	1440	720	360	240	60	120	30
65	1560	780	390	260	65	130	32
70	1680	840	420	280	70	140	35

* - For other offsets, use the following merging taper length formula for L:
For speed of 40 mph or less, $L = WS^2/60$
For speed of 45 mph or more, $L = WS$

Where: L = Taper length in feet
W = Width of offset in feet
S = Posted speed limit, off-peak 85th-percentile speed prior to work starting, or the anticipated operating speed in mph

** - Use for taper and tangent sections where there are no pavement markings or where there is a conflict between existing pavement markings and channelizers (CA).

TABLE 2

LONGITUDINAL BUFFER SPACE AND FLAGGER STATION SPACING

SPEED *	Min D **	DOWNGRADE Min D ***		
		-3%	-6%	-9%
mph	ft	ft	ft	ft
20	115	116	120	126
25	155	158	165	173
30	200	205	215	227
35	250	257	271	287
40	305	315	333	354
45	360	378	400	427
50	425	446	474	507
55	495	520	553	593
60	570	598	638	686
65	645	682	728	785
70	730	771	825	891

* - Speed is posted speed limit, off-peak 85th-percentile speed prior to work starting, or the anticipated operating speed in mph

** - Longitudinal buffer space or flagger station spacing

*** - Use on sustained downgrade steeper than -3 percent and longer than 1 mile.

TABLE 3

ADVANCE WARNING SIGN SPACING

ROAD TYPE	DISTANCE BETWEEN SIGNS *		
	A	B	C
	ft	ft	ft
URBAN - 25 mph OR LESS	100	100	100
URBAN - MORE THAN 25 mph TO 40 mph	250	250	250
URBAN - MORE THAN 40 mph	350	350	350
RURAL	500	500	500
EXPRESSWAY / FREEWAY	1000	1500	2640

* - The distances are approximate, are intended for guidance purposes only, and should be applied with engineering judgment. These distances should be adjusted by the Engineer for field conditions, if necessary, by increasing or decreasing the recommmended distances.

STATE OF CALIFORNIA
DEPARTMENT OF TRANSPORTATION

TRAFFIC CONTROL SYSTEM TABLES FOR LANE AND RAMP CLOSURES

NO SCALE

RSP T9 DATED JULY 19, 2013 SUPERSEDES RSP T9 DATED APRIL 19, 2013 THAT SUPPLEMENTS THE STANDARD PLANS BOOK DATED 2010.

REVISED STANDARD PLAN RSP T9

TO ACCOMPANY PLANS DATED 3-28-16

Dist	COUNTY	ROUTE	POST MILES TOTAL PROJECT	SHEET No.	TOTAL SHEETS
01	Men	101	3.8, 5.3	60	99

REGISTERED CIVIL ENGINEER

April 19, 2013
PLANS APPROVAL DATE

REGISTERED PROFESSIONAL ENGINEER Gurinderpal Bhullar No. C48815 Exp. 9-30-14 CIVIL STATE OF CALIFORNIA

THE STATE OF CALIFORNIA OR ITS OFFICERS OR AGENTS SHALL NOT BE RESPONSIBLE FOR THE ACCURACY OR COMPLETENESS OF SCANNED COPIES OF THIS PLAN SHEET.

NOTES:

See Revised Standard Plan RSP T9 for tables.

Use cone spacing X for taper segment, Y for tangent segment or Z for conflict situations, as approriate, per Table 1, unless X, Y, or Z cone spacing is shown on this sheet.

Unless otherwise specified in the special provisions, all temporary warning signs shall have black legend on fluorescent orange background.

California codes are designated by (CA). Otherwise, Federal (MUTCD) codes are shown.

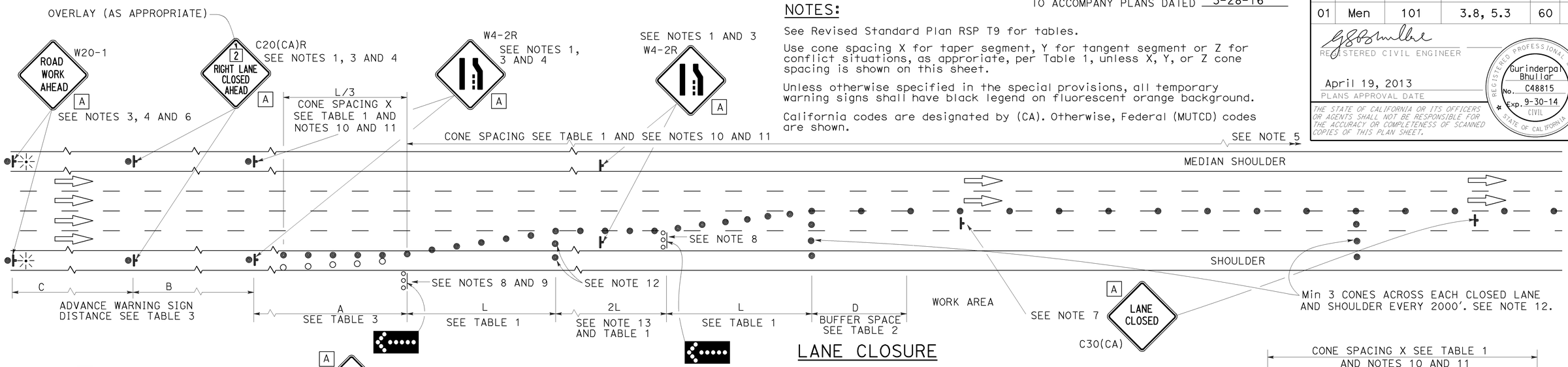

LANE CLOSURE

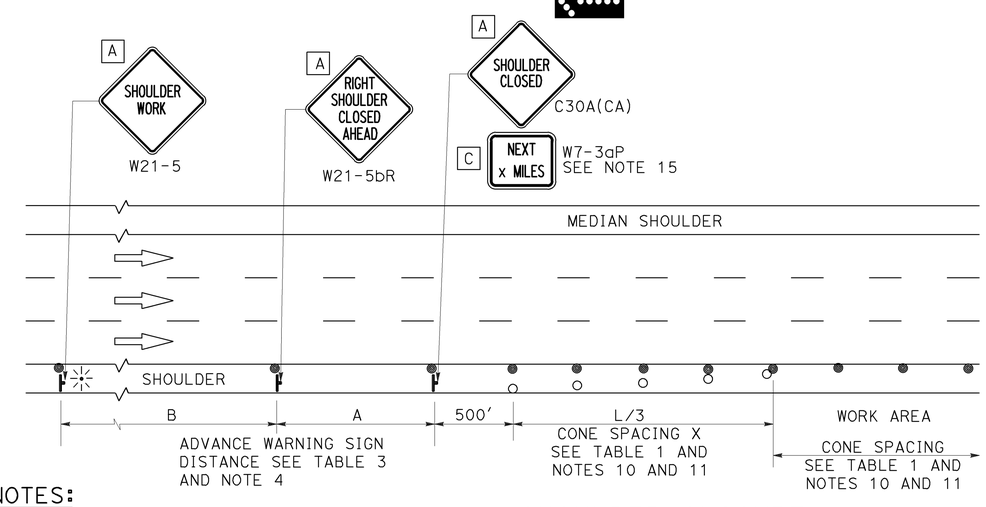

SHOULDER CLOSURE

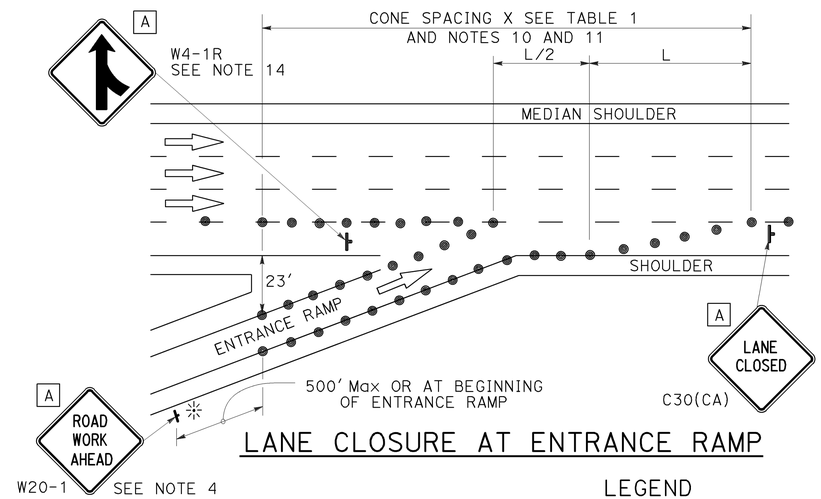

LANE CLOSURE AT ENTRANCE RAMP

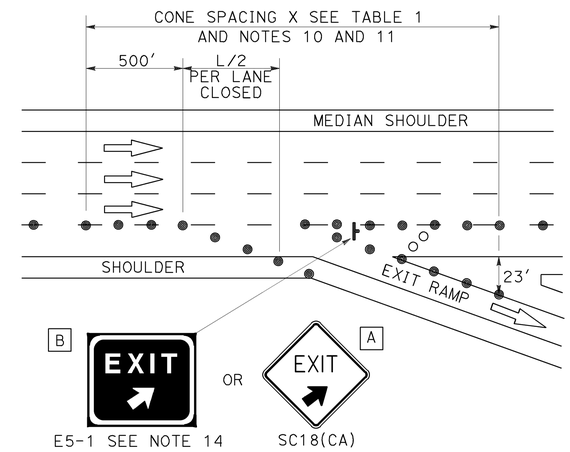

LANE CLOSURE AT EXIT RAMP

NOTES:

1. Median lane closures shall conform to the details as shown except that C20(CA)L and W4-2L signs shall be used.
2. At least one person shall be assigned to provide full time maintenance of traffic control devices for lane closures.
3. Duplicate sign installations are not required:
   a) On opposite shoulder if at least one-half of the available lanes remain open to traffic.
   b) In the median if the width of the median shoulder is less than 8' and the outside lanes are to be closed.
4. Each advance warning sign on each side of the roadway shall be equipped with at least two flags for daytime closure. Each flag shall be at least 16" x 16" in size and shall be orange or fluorescent red-orange in color. Flashing beacons shall be placed at the locations indicated for lane closure during hours of darkness.
5. A G20-2 "END ROAD WORK" sign, with minimum size of 48" x 24" as appropriate, shall be placed at the end of the lane closure unless the end of work area is obvious or ends within a larger project's limits.
6. If the W20-1 sign would follow within 2000' of a stationary W20-1 or G20-1 "ROAD WORK NEXT _____ MILES", use a C20(CA) sign for the first advance warning sign.
7. Place a C30(CA) sign every 2000' throughout length of lane closure.
8. One flashing arrow sign for each lane closed. The flashing arrow signs shall be Type I.
9. A minimum 1500' of sight distance shall be provided where possible for vehicles approaching the first flashing arrow sign. Lane closures shall not begin at top of crest vertical curve or on a horizontal curve.
10. All cones used for lane closures during the hours of darkness shall be fitted with retroreflective bands (or sleeves) as specified in the specifications.
11. Portable delineators, placed at one-half the spacing indicated for traffic cones may be used instead of cones for daytime closures only.
12. Unless otherwise specified in the special provisions, a minimum of 3 cones shall be placed transversely across each closed lane and shoulder at each location where a taper across a traffic lane ends and every 2000' as shown on the "Lane Closure" detail. Two Type II barricades may be used instead of the 3 cones. The transverse alignment of the cones or barricades on the closed shoulder may be shifted from the transverse alignment to provide access to the work.
13. Unless otherwise specified in the special provisions, the 2L tangent shown along lane lines shall be used between the L tapers required for each closed traffic lane.
14. Unless otherwise specified in the special provisions, the E5-1 or SC18(CA) and W4-1 signs shall be used as shown.
15. A W7-3aP "NEXT____ MILES" plaque must be used if theshoulder closure extends beyond the distance that can be perceived by road users.

LEGEND

- TRAFFIC CONE
- TRAFFIC CONE (OPTIONAL TAPER)
- TEMPORARY TRAFFIC CONTROL SIGN
- FLASHING ARROW SIGN (FAS)
- FAS SUPPORT OR TRAILER
- PORTABLE FLASHING BEACON

SIGN PANEL SIZE (Min)

A	48" x 48"
B	72" x 60"
C	36" x 30"

STATE OF CALIFORNIA
DEPARTMENT OF TRANSPORTATION

TRAFFIC CONTROL SYSTEM FOR LANE CLOSURE ON FREEWAYS AND EXPRESSWAYS

NO SCALE

RSP T10 DATED APRIL 19, 2013 SUPERSEDES STANDARD PLAN T10 DATED MAY 20, 2011 - PAGE 237 OF THE STANDARD PLANS BOOK DATED 2010.

REVISED STANDARD PLAN RSP T10

2010 REVISED STANDARD PLAN RSP T10

12-18-12

Dist	COUNTY	ROUTE	POST MILES TOTAL PROJECT	SHEET No.	TOTAL SHEETS
01	Men	101	3.8, 5.3	61	99

REGISTERED CIVIL ENGINEER

April 19, 2013
PLANS APPROVAL DATE

REGISTERED PROFESSIONAL ENGINEER Gurinderpal Bhullar No. C48815 Exp. 9-30-14 CIVIL STATE OF CALIFORNIA

THE STATE OF CALIFORNIA OR ITS OFFICERS OR AGENTS SHALL NOT BE RESPONSIBLE FOR THE ACCURACY OR COMPLETENESS OF SCANNED COPIES OF THIS PLAN SHEET.

TO ACCOMPANY PLANS DATED 3-28-16

LEGEND

- TRAFFIC CONE
- TEMPORARY TRAFFIC CONTROL SIGN
- FLASHING ARROW SIGN (FAS)
- FAS SUPPORT OR TRAILER
- PORTABLE FLASHING BEACON

SIGN PANEL SIZE (Min)

- A 48" x 48"
- B 24" x 24"
- C 36" x 18"

NOTES:

See Revised Standard Plan RSP T9 for tables.

Use cone spacing X for taper segment, Y for tangent segment or Z for conflict situations, as approriate, per Table 1, unless X, Y, or Z cone spacing is shown on this sheet.

Unless otherwise specified in the special provisions, all temporary warning signs shall have black legend on fluorescent orange background.

California codes are designated by (CA). Otherwise, Federal (MUTCD) codes are shown.

TYPICAL HALF ROAD CLOSURE

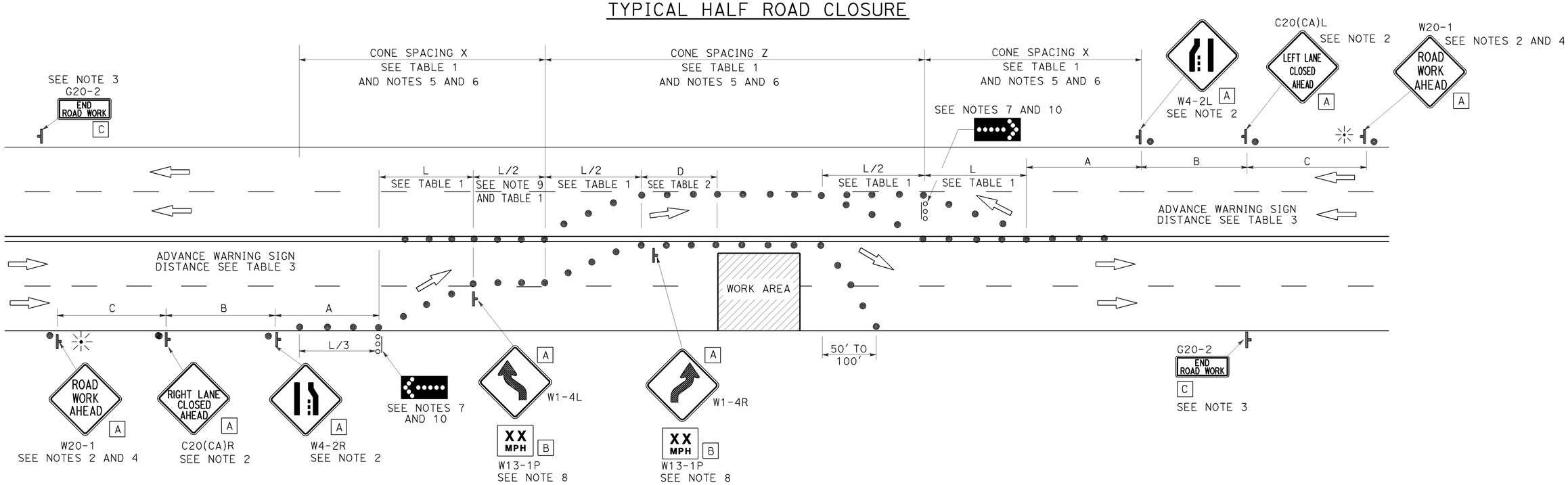

NOTES:

1. At least one person shall be assigned to provide full time maintenance of traffic control devices for lane closure unless, otherwise directed by the Engineer.
2. Each advance warning sign in each direction of travel shall be equipped with at least two flags for daytime closure. Each flag shall be at least 16" x 16" in size and shall be orange or fluorescent red-orange in color. Flashing beacons shall be placed at the locations indicated for lane closure during hours of darkness.
3. A G20-2 "END ROAD WORK" sign, as appropriate, shall be placed at the end of the lane closure unless the end of work area is obvious, or ends within a larger project's limits.
4. If the W20-1 sign would follow within 2000' of a stationary W20-1 or G20-1 "ROAD WORK NEXT _____ MILES", use a C20(CA) sign for the first advance warning sign.
5. All cones used for lane closures during the hours of darkness shall be fitted with retroreflective bands (or sleeves) as specified in the specifications.
6. Portable delineators, placed at one-half the spacing indicated for traffic cones, may be used instead of cones for daytime closures only.
7. Flashing arrow signs shall be either Type I or Type II.
8. Advisory speed will be determined by the Engineer. The W13-1P Plaque will not be required when advisory speed is more than the posted or maximum speed limit.
9. Unless otherwise specified in the special provisions, the tangent (L/2) shall be used.
10. A minimum 1500' of sight distance shall be provided where possible for vehicles approaching the first flashing arrow sign. Lane closures shall not begin at the top of crest vertical curve or on a horizontal curve.

STATE OF CALIFORNIA
DEPARTMENT OF TRANSPORTATION

TRAFFIC CONTROL SYSTEM FOR HALF ROAD CLOSURE ON MULTILANE CONVENTIONAL HIGHWAYS AND EXPRESSWAYS

NO SCALE

RSP T12 DATED APRIL 19, 2013 SUPERSEDES STANDARD PLAN T12
DATED MAY 20, 2011 - PAGE 240 OF THE STANDARD PLANS BOOK DATED 2010.

REVISED STANDARD PLAN RSP T12

2010 REVISED STANDARD PLAN RSP T12

4-2-13

Dist	COUNTY	ROUTE	POST MILES TOTAL PROJECT	SHEET No.	TOTAL SHEETS
01	Men	101	3.8, 5.3	62	99

REGISTERED CIVIL ENGINEER

April 19, 2013
PLANS APPROVAL DATE

REGISTERED PROFESSIONAL ENGINEER Gurinderpal Bhullar No. C48815 Exp. 9-30-14 CIVIL STATE OF CALIFORNIA

THE STATE OF CALIFORNIA OR ITS OFFICERS OR AGENTS SHALL NOT BE RESPONSIBLE FOR THE ACCURACY OR COMPLETENESS OF SCANNED COPIES OF THIS PLAN SHEET.

TO ACCOMPANY PLANS DATED 3-28-16

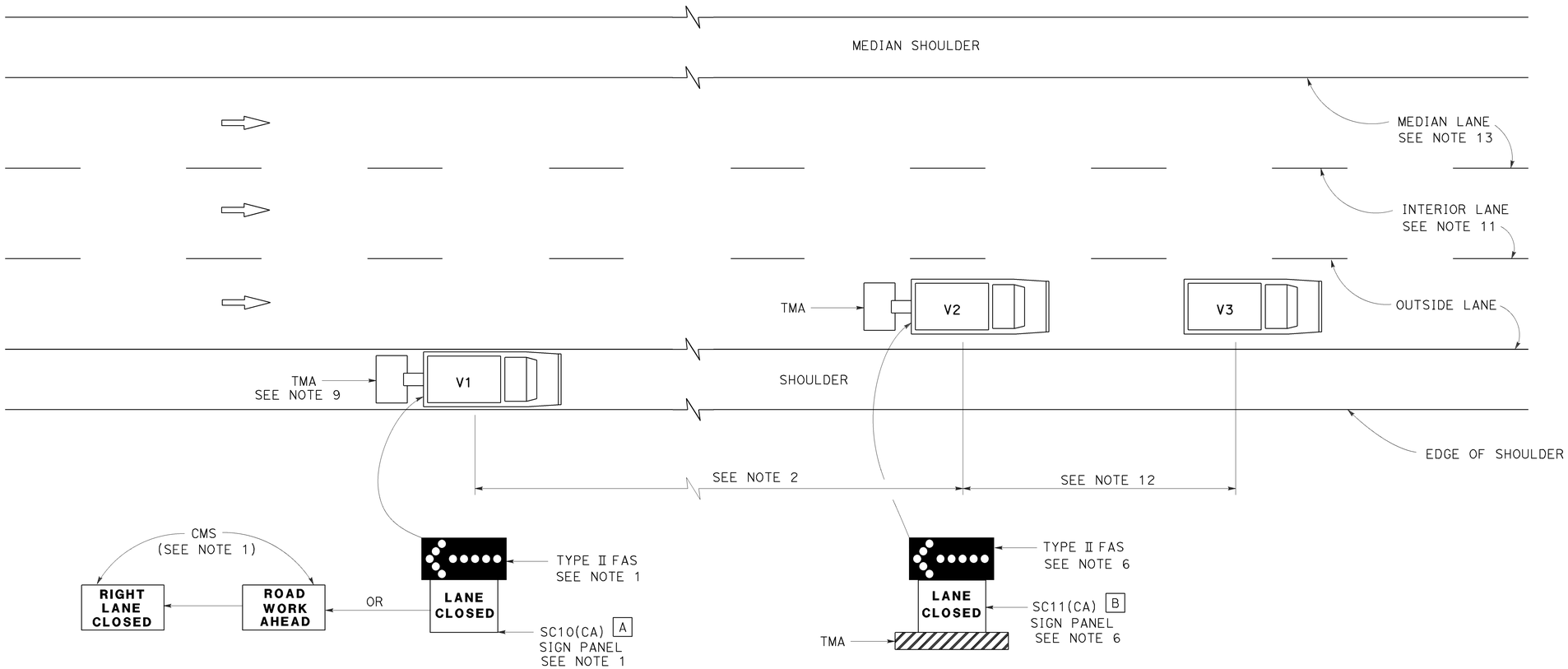

MOVING LANE CLOSURE ON MEDIAN LANE OR OUTSIDE LANE OF MULTILANE HIGHWAYS

SIGN PANEL SIZE (Min)

A 66" x 36"

B 54" x 42"

LEGEND

V1	SIGN VEHICLE
V2	SHADOW VEHICLE
V3	WORK/APPLICATION VEHICLE
	FLASHING ARROW SIGN (FAS)
CMS	CHANGEABLE MESSAGE SIGN
TMA	TRUCK-MOUNTED ATTENUATOR

NOTES:

1. Either a changeable message sign or a SC10(CA) sign panel and a Type II flashing arrow sign shall be mounted on the rear of sign vehicle V1. The changeable message sign shall be sequenced to show the "ROAD WORK AHEAD" message first, followed by the "RIGHT LANE CLOSED" message. For median lane closure, the flashing arrow symbol shall be reversed with the arrowhead on the right and the changeable message sign shall show "LEFT LANE CLOSED".
2. If traffic queues develop, sign vehicle V1 should be positioned upstream from the end of queue. Sign vehicle V1 shall be positioned where highly visible when shoulders are not available.
3. A minimum sight distance of 1500′ should be provided in advance of sign vehicle V1.
4. Sign vehicle V1 should remain at the beginning of horizontal or vertical curves until the other vehicles (V2 and V3) are far enough beyond the curve to resume the minimum sight distance of 1500′.
5. Vehicle-mounted sign panels shall have Type III or above retroreflective sheeting, black on white, or black on fluorescent orange, with 6" minimum series D letters per Caltrans sign specifications.
6. Shadow vehicle V2 shall be equipped with a truck-mounted attenuator. The sign panel shown and a Type II flashing arrow sign shall be mounted on the rear of shadow vehicle V2. For median lane closure the flashing arrow sign symbol shall be displayed with the arrowhead on the right.
7. All vehicles used for lane closures shall be equipped with two-way radios, and the vehicle operators shall maintain communication during the work or application operation.
8. All vehicles shall be equipped with flashing or rotating amber lights.
9. If sign vehicle V1 encroaches into the traffic lane due to insufficient shoulder width, sign vehicle V1 shall be equipped with a truck-mounted attenuator. Sign vehicle V1 shall stay as close to the edge of shoulder as practicable.
10. Where workers would be on foot in the work area, a stationary type lane closure (Revised Standard Plan T10, T11, etc., as applicable) shall be used instead of this plan.
11. For moving lane closure on interior lane of multilane highways, use Revised Standard Plan T16.
12. The spacing between work vehicle(s) and the shadow vehicles, and between each shadow vehicle should be minimized to deter road users from driving in between.
13. When the work/application vehicle V3 occupies the median lane, sign vehicle V1 should drive in the median shoulder and indicate left lane closed ahead.

STATE OF CALIFORNIA
DEPARTMENT OF TRANSPORTATION

TRAFFIC CONTROL SYSTEM FOR MOVING LANE CLOSURE ON MULTILANE HIGHWAYS

NO SCALE

RSP T15 DATED APRIL 19, 2013 SUPERSEDES STANDARD PLAN T15
DATED MAY 20, 2011 - PAGE 243 OF THE STANDARD PLANS BOOK DATED 2010.

REVISED STANDARD PLAN RSP T15

2010 REVISED STANDARD PLAN RSP T15

12-18-12

DIST	COUNTY	ROUTE	POST MILES TOTAL PROJECT	SHEET No.	TOTAL SHEETS
01	Men	101	3.8, 5.3	63	99

REGISTERED CIVIL ENGINEER 12-15-15 DATE

3-28-16
PLANS APPROVAL DATE

REGISTERED PROFESSIONAL ENGINEER Keith Stillmunkes No. 68878 Exp. 9-30-17 CIVIL STATE OF CALIFORNIA

The State of California or its officers or agents shall not be responsible for the accuracy or completeness of scanned copies of this plan sheet.

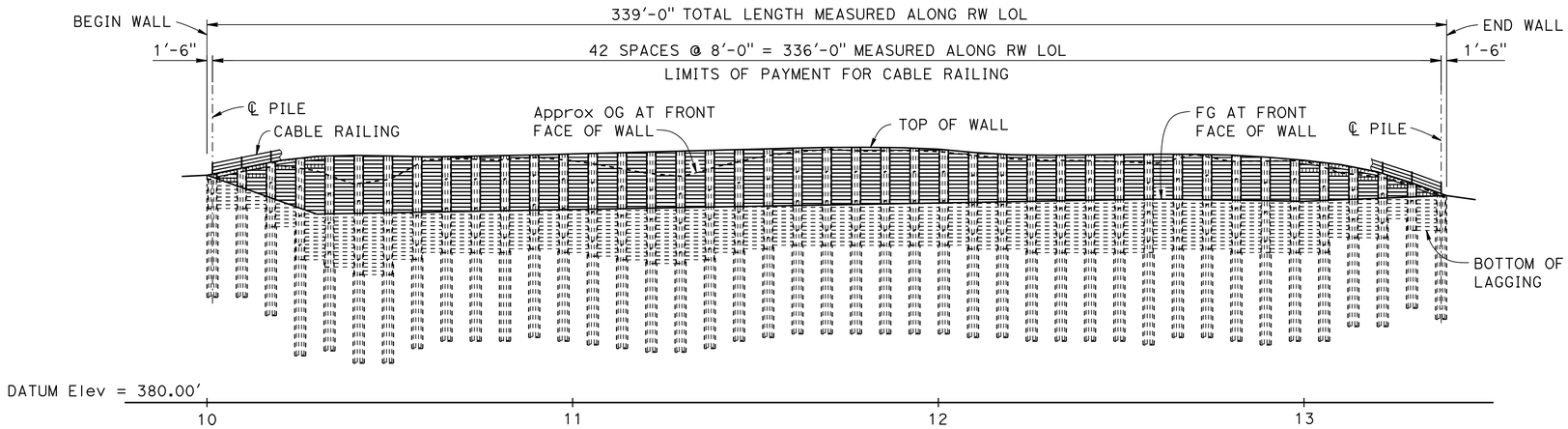

DEVELOPED MIRROR ELEVATION

1" = 20'

QUANTITIES

STRUCTURE EXCAVATION (SOLDIER PILE WALL)	811	CY
STRUCTURE BACKFILL (SOLDIER PILE WALL)	50	CY
CONCRETE BACKFILL (SOLDIER PILE WALL)	273	CY
LEAN CONCRETE BACKFILL	261	CY
GROUND ANCHOR (SUBHORIZONTAL)	118	EA
STEEL SOLDIER PILE (2 - W14 X 53)	2,104	LF
36" DRILLED HOLE	2,016	LF
STRUCTURAL CONCRETE, PILASTER	99	CY
BAR REINFORCING STEEL (PILASTER)	14,605	LB
TIMBER LAGGING	39	MFBM
CLEAN AND PAINT STEEL SOLDIER PILING	LUMP	SUM
CABLE RAILING	336	LF

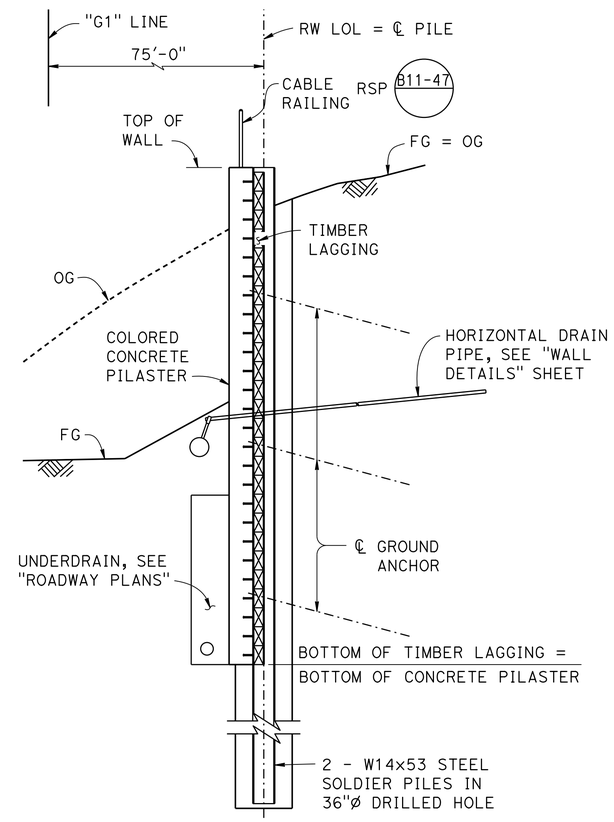

TYPICAL SECTION

¼" = 1'-0"

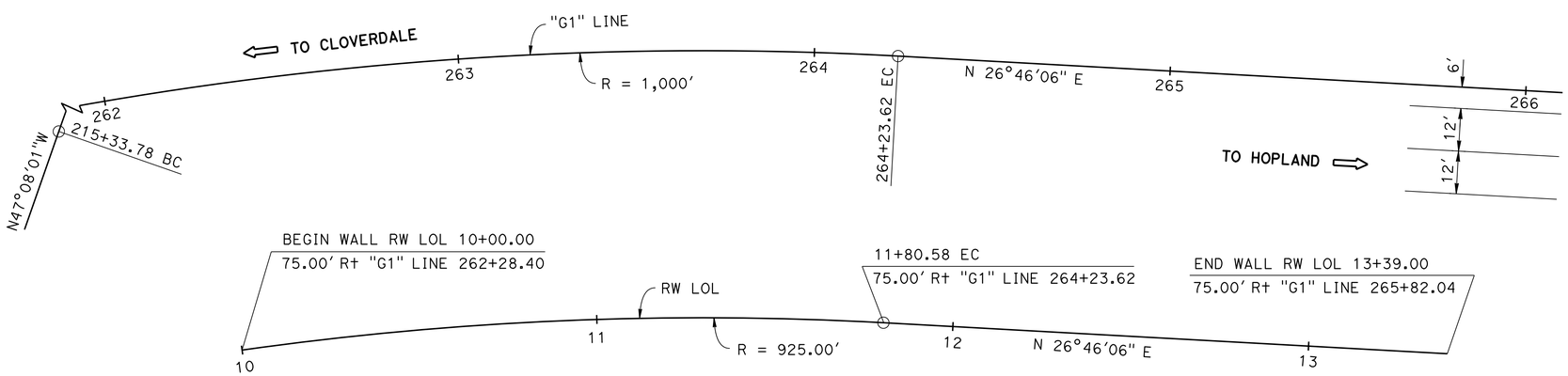

CURVE DATA

"G1" LINE	RW LOL
R = 1000.00'	R = 925.00'
Δ = 73°54'07"	Δ = 11°11'07"
T = 752.21'	T = 90.58'
L = 1289.84'	L = 180.58'

PLAN

1" = 20'

NOTE:

For INDEX TO PLANS, STANDARD PLANS list and GENERAL NOTES, see "INDEX TO PLANS" sheet.

Jeff Sims, DESIGN ENGINEER	DESIGN	BY Keith Stillmunkes	CHECKED Greg Thornton	LOAD & RESISTANCE FACTOR DESIGN	
	DETAILS	BY Jie Tang	CHECKED Greg Thornton	LAYOUT: BY Keith Stillmunkes	CHECKED Greg Thornton
	QUANTITIES	BY Gerald Dickerson	CHECKED Eric Chaffee	SPECIFICATIONS: BY Karen Doll	PLANS AND SPECS COMPARED Karen Doll

ORIGINAL SCALE IN INCHES FOR REDUCED PLANS 0 1 2 3

STATE OF CALIFORNIA DEPARTMENT OF TRANSPORTATION

DIVISION OF ENGINEERING SERVICES STRUCTURE DESIGN DESIGN BRANCH 1

BRIDGE NO. 10E0037 POST MILE 3.75

FORMOLI SLIDE RETAINING WALL
GENERAL PLAN

UNIT: 3576
PROJECT NUMBER & PHASE: 01120001331
CONTRACT NO.: 01-0B5004

DISREGARD PRINTS BEARING EARLIER REVISION DATES

REVISION DATES 10-31-14 11/24/15 11/30/15 SHEET 1 OF 14

FILE => formoli-a-gp.dgn

STRUCTURES DESIGN GENERAL PLAN SHEET (ENGLISH) (REV.09-01-10)

USERNAME => s119538 DATE PLOTTED => 18-APR-2016 TIME PLOTTED => 11:14

DIST	COUNTY	ROUTE	POST MILES TOTAL PROJECT	SHEET No.	TOTAL SHEETS
01	Men	101	3.8, 5.3	64	99

REGISTERED CIVIL ENGINEER 12-15-15 DATE

3-28-16
PLANS APPROVAL DATE

REGISTERED PROFESSIONAL ENGINEER Keith Stillmunkes No. 68878 Exp. 9-30-17 CIVIL STATE OF CALIFORNIA

The State of California or its officers or agents shall not be responsible for the accuracy or completeness of electronic copies of this plan sheet.

INDEX TO PLANS

SHEET NO.	TITLE
1.	GENERAL PLAN
2.	INDEX TO PLANS
3.	STRUCTURE PLAN NO. 1
4.	STRUCTURE PLAN NO. 2
5.	STRUCTURE PLAN NO. 3
6.	FOUNDATION PLAN
7.	TYPICAL SECTION
8.	WALL DETAILS
9.	GROUND ANCHOR DETAILS
10.	EXCAVATION AND BACKFILL LIMITS
11.	LOG OF TEST BORINGS 1 OF 4
12.	LOG OF TEST BORINGS 2 OF 4
13.	LOG OF TEST BORINGS 3 OF 4
14.	LOG OF TEST BORINGS 4 OF 4

STANDARD PLANS DATED 2010

A10A	ABBREVIATIONS (SHEET 1 OF 2)
RSP A10B	ABBREVIATIONS (SHEET 2 OF 2)
A10C	LINES AND SYMBOLS (SHEET 1 OF 3)
A10D	LINES AND SYMBOLS (SHEET 2 OF 3)
A10E	LINES AND SYMBOLS (SHEET 3 OF 3)
RSP A10F	LEGEND - SOIL (SHEET 1 OF 2)
RSP A10G	LEGEND - SOIL (SHEET 2 OF 2)
A10H	LEGEND - ROCK
RSP B11-47	CABLE RAILING

STANDARD PLAN SHEET No.

DETAIL No.

GENERAL NOTES
LOAD AND RESISTANCE FACTOR DESIGN

DESIGN:

AASHTO LRFD Bridge Design Specifications, 2012 Edition and the California Amendments dated January 2014

SOIL PARAMETERS:

(For determination of design lateral earth pressures)

Elevation above 420 ft: $\phi = 24°$, $\gamma = 125$ pcf, c = 0

Elevation between 404 ft and 420 ft: $\phi = 25°$, $\gamma = 135$ pcf, c = 200 psf

Elevation below 404 ft: $\phi = 35°$, $\gamma = 135$ pcf, c = 200 psf

SEISMIC PARAMETERS:

$K_h = 0.23$ g
$K_v = 0.12$ g

LANDSLIDE RETENTION FORCE:

Horizontal Landslide Retention Force (LRF) = 45 k/ft
Application of LRF: Between RW LOL 10+29.5 and 13+09.5

PRESTRESSING STEEL:
(GROUND ANCHORS)

Strands - 270 ksi low relaxation steel

Bars - 150 ksi

FTL = Factored Test Load Per Anchor (kips)

FDL = Factored Design Load Per Anchor (kips)

Max FDL = 200 kips

FTL = 1.0 FDL

LL = Lock off Load = 0.55 FDL

f_{pu} = Minimum tensile stress of steel in ground anchor (ksi)

A_s(Min) = Minimum cross sectional area of prestressing steel in Ground Anchor (in^2)

Strands: $A_s(\text{Min}) = \dfrac{1.0\ \text{FTL}}{0.75\ f_{pu}}$

Bars: $A_s(\text{Min}) = \dfrac{1.0\ \text{FTL}}{0.80\ f_{pu}}$

REINFORCED CONCRETE:

$f'_c = 3.6$ ksi
$f_y = 60$ ksi
n = 8

STRUCTURAL STEEL:

$f_y = 50$ ksi

DESIGN	BY Keith Stillmunkes	CHECKED Greg Thornton	
DETAILS	BY Jie Tang	CHECKED Greg Thornton	
QUANTITIES	BY Gerald Dickerson	CHECKED Eric Chaffee	

STATE OF CALIFORNIA
DEPARTMENT OF TRANSPORTATION

DIVISION OF ENGINEERING SERVICES
STRUCTURE DESIGN
DESIGN BRANCH 1

BRIDGE NO. 10E0037
POST MILE 3.75

FORMOLI SLIDE RETAINING WALL
INDEX TO PLANS

STRUCTURES DESIGN DETAIL SHEET (ENGLISH) (REV. 09-01-10)

ORIGINAL SCALE IN INCHES FOR REDUCED PLANS 0 1 2 3

UNIT: 3576
PROJECT NUMBER & PHASE: 01120001331
CONTRACT NO.: 01-0B5004

DISREGARD PRINTS BEARING EARLIER REVISION DATES

REVISION DATES 03/10/15 10/22/15 12/15/15

SHEET 2 OF 14

FILE => formoli-a-itp.dgn

USERNAME => s119538 DATE PLOTTED => 18-APR-2016 TIME PLOTTED => 11:14

DIST	COUNTY	ROUTE	POST MILES TOTAL PROJECT	SHEET No.	TOTAL SHEETS
01	Men	101	3.8, 5.3	65	99

REGISTERED CIVIL ENGINEER 12-15-15 DATE

3-28-16
PLANS APPROVAL DATE

REGISTERED PROFESSIONAL ENGINEER Keith Stillmunkes No. 68878 Exp. 9-30-17 CIVIL STATE OF CALIFORNIA

The State of California or its officers or agents shall not be responsible for the accuracy or completeness of electronic copies of this plan sheet.

NOTE: Cable railing not shown.

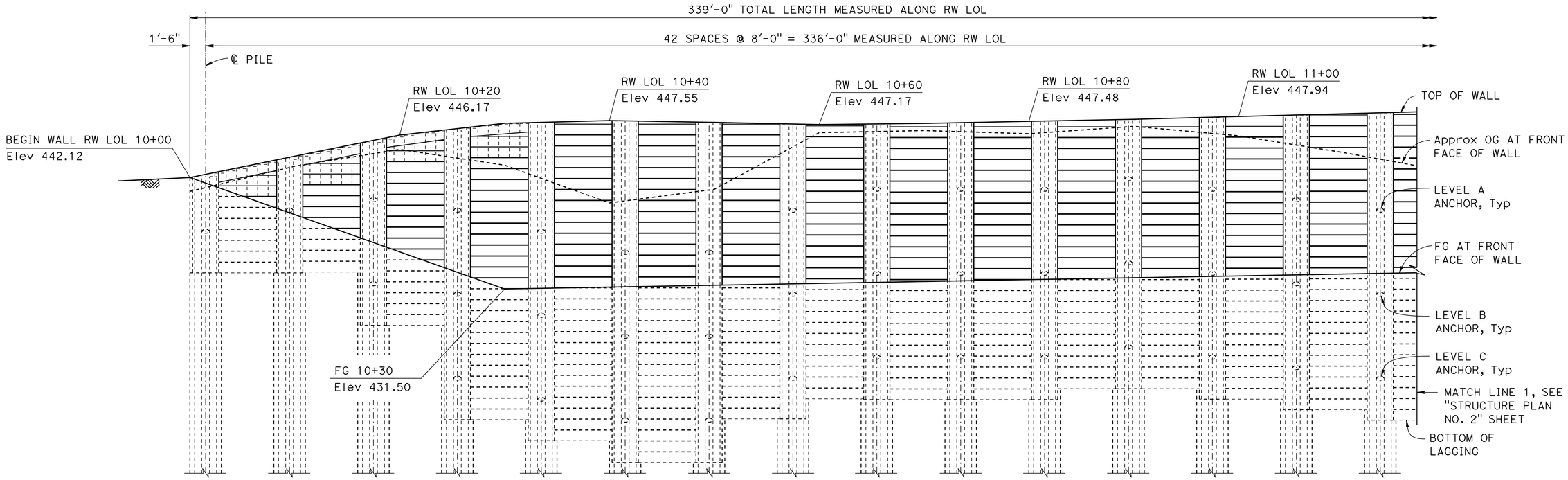

PILE No:	1	2	3	4	5	6	7	8	9	10	11	12	13	14	15
PILE TIP Elev:	409.0	409.0	404.0	395.0	393.0	391.0	391.0	395.0	397.0	397.0	397.0	398.0	397.0	396.0	395.0
BOTTOM OF LAGGING Elev:	433.0	433.0	428.0	419.0	417.0	415.0	419.0	421.0	421.0	421.0	422.0	422.0	421.0	420.0	419.0
NUMBER OF ANCHORS:	1	1	2	3	3	3	3	3	3	3	3	3	3	3	3
LEVEL A ANCHOR Elev:	437.0	439.0	440.0	439.0	437.0	435.0	435.0	439.0	441.0	441.0	441.0	442.0	441.0	440.0	439.0
LEVEL A ANCHOR FORCE (kip):	55.0	70.0	85.0	140.0	150.0	175.0	150.0	150.0	145.0	145.0	145.0	140.0	160.0	175.0	140.0
LEVEL B ANCHOR Elev:			432.0	431.0	429.0	427.0	427.0	431.0	433.0	433.0	433.0	434.0	433.0	432.0	431.0
LEVEL B ANCHOR FORCE (kip):			85.0	140.0	140.0	190.0	130.0	135.0	135.0	135.0	140.0	140.0	170.0	190.0	145.0
LEVEL C ANCHOR Elev:				423.0	421.0	419.0	419.0	423.0	425.0	425.0	425.0	426.0	425.0	424.0	423.0
LEVEL C ANCHOR FORCE (kip):				105.0	105.0	140.0	100.0	105.0	110.0	110.0	110.0	105.0	125.0	140.0	110.0

DATUM Elev = 386.00'

10 11

DEVELOPED MIRRORED ELEVATION

1" = 5'

	BY	CHECKED
DESIGN	Keith Stillmunkes	Greg Thornton
DETAILS	Jie Tang	Greg Thornton
QUANTITIES	Gerald Dickerson	Eric Chaffee

STATE OF CALIFORNIA DEPARTMENT OF TRANSPORTATION

DIVISION OF ENGINEERING SERVICES STRUCTURE DESIGN DESIGN BRANCH 1

BRIDGE NO. 10E0037 POST MILE 3.75

FORMOLI SLIDE RETAINING WALL STRUCTURE PLAN NO. 1

STRUCTURES DESIGN DETAIL SHEET (ENGLISH) (REV. 09-01-10)

ORIGINAL SCALE IN INCHES FOR REDUCED PLANS 0 1 2 3

UNIT: 3576
PROJECT NUMBER & PHASE: 01120001331 CONTRACT NO.: 01-0B5004

DISREGARD PRINTS BEARING EARLIER REVISION DATES

REVISION DATES 03/09/15 10/27/15 09/17/15 SHEET 3 OF 14

FILE => formoli-b-sp01.dgn

USERNAME => s119538 DATE PLOTTED => 18-APR-2016 TIME PLOTTED => 11:14

DIST	COUNTY	ROUTE	POST MILES TOTAL PROJECT	SHEET No.	TOTAL SHEETS
01	Men	101	3.8, 5.3	66	99

REGISTERED CIVIL ENGINEER 12-15-15 DATE

3-28-16
PLANS APPROVAL DATE

REGISTERED PROFESSIONAL ENGINEER Keith Stillmunkes No. 68878 Exp. 9-30-17 CIVIL STATE OF CALIFORNIA

The State of California or its officers or agents shall not be responsible for the accuracy or completeness of electronic copies of this plan sheet.

NOTE: Cable railing not shown.

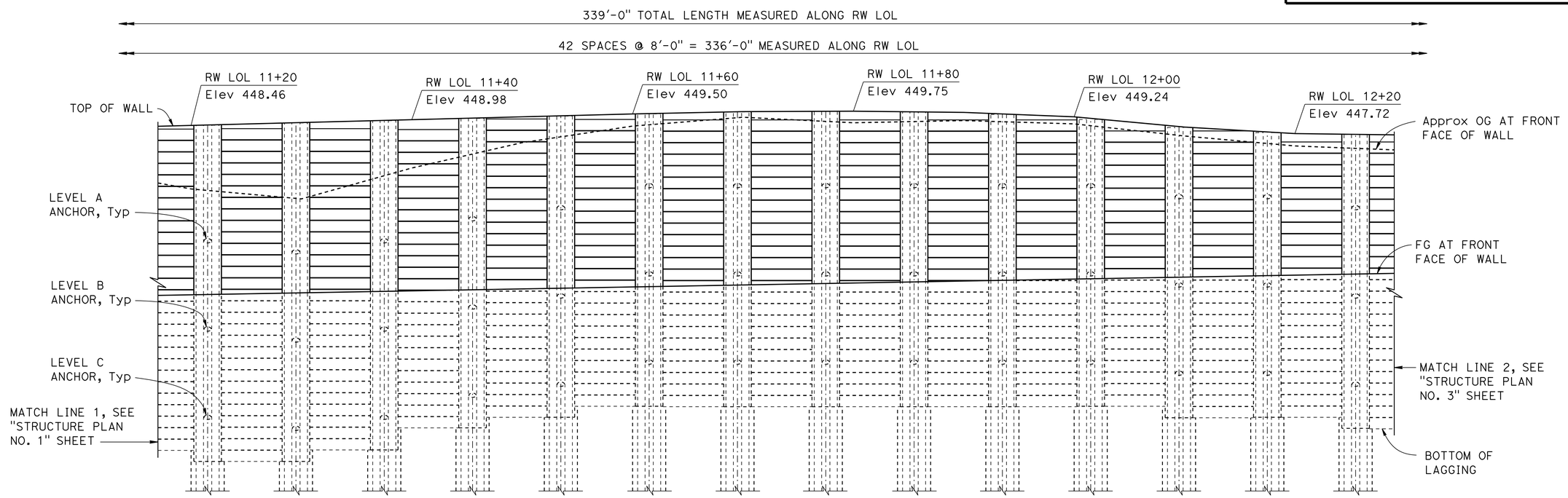

PILE No:	16	17	18	19	20	21	22	23	24	25	26	27	28	29
PILE TIP Elev:	394.0	394.0	395.0	397.0	398.0	399.0	399.0	399.0	399.0	399.0	399.0	398.0	398.0	397.0
BOTTOM OF LAGGING Elev:	418.0	419.0	421.0	422.0	423.0	423.0	423.0	423.0	423.0	423.0	423.0	422.0	422.0	421.0
NUMBER OF ANCHORS:	3	3	3	3	3	3	3	3	3	3	3	3	3	3
LEVEL A ANCHOR Elev:	438.0	437.0	438.0	440.0	441.0	443.0	443.0	443.0	443.0	443.0	443.0	442.0	442.0	441.0
LEVEL A ANCHOR FORCE (kip):	135.0	140.0	150.0	150.0	155.0	145.0	155.0	150.0	150.0	150.0	145.0	150.0	135.0	150.0
LEVEL B ANCHOR Elev:	430.0	429.0	430.0	432.0	433.0	435.0	435.0	435.0	435.0	435.0	435.0	434.0	434.0	433.0
LEVEL B ANCHOR FORCE (kip):	140.0	135.0	135.0	135.0	135.0	135.0	135.0	135.0	140.0	140.0	145.0	155.0	150.0	160.0
LEVEL C ANCHOR Elev:	422.0	421.0	422.0	424.0	425.0	427.0	427.0	427.0	427.0	427.0	427.0	426.0	426.0	425.0
LEVEL C ANCHOR FORCE (kip):	105.0	95.0	110.0	100.0	105.0	110.0	115.0	110.0	110.0	110.0	110.0	115.0	115.0	115.0

DATUM Elev = 386.00'

12

DEVELOPED MIRRORED ELEVATION

1" = 5'

DESIGN	BY Keith Stillmunkes	CHECKED Greg Thornton	
DETAILS	BY Jie Tang	CHECKED Greg Thornton	
QUANTITIES	BY Gerald Dickerson	CHECKED Eric Chaffee	

STATE OF CALIFORNIA
DEPARTMENT OF TRANSPORTATION

DIVISION OF ENGINEERING SERVICES
STRUCTURE DESIGN
DESIGN BRANCH 1

BRIDGE NO. 10E0037
POST MILE 3.75

FORMOLI SLIDE RETAINING WALL
STRUCTURE PLAN NO. 2

STRUCTURES DESIGN DETAIL SHEET (ENGLISH) (REV. 09-01-10)

ORIGINAL SCALE IN INCHES FOR REDUCED PLANS 0 1 2 3

UNIT: 3576
PROJECT NUMBER & PHASE: 01120001331
CONTRACT NO.: 01-0B5004

DISREGARD PRINTS BEARING EARLIER REVISION DATES

REVISION DATES 03/09/15 10/21/15 09/11/15

SHEET 4 OF 14

FILE => formoli-b-sp02.dgn

USERNAME => s119538 DATE PLOTTED => 18-APR-2016 TIME PLOTTED => 11:14

DIST	COUNTY	ROUTE	POST MILES TOTAL PROJECT	SHEET No.	TOTAL SHEETS
01	Men	101	3.8, 5.3	67	99

REGISTERED CIVIL ENGINEER 12-15-15 DATE

3-28-16
PLANS APPROVAL DATE

REGISTERED PROFESSIONAL ENGINEER Keith Stillmunkes No. 68878 Exp. 9-30-17 CIVIL STATE OF CALIFORNIA

The State of California or its officers or agents shall not be responsible for the accuracy or completeness of electronic copies of this plan sheet.

NOTE: Cable railing not shown.

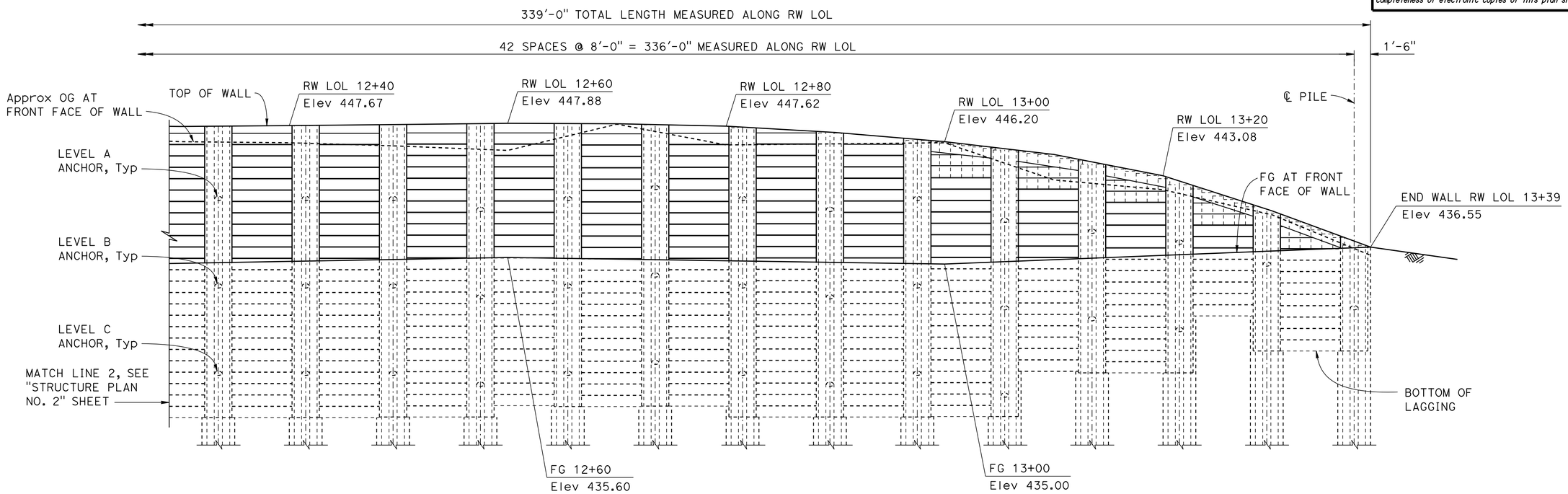

PILE No:	30	31	32	33	34	35	36	37	38	39	40	41	42	43
PILE TIP Elev:	397.0	397.0	397.0	396.0	398.0	398.0	397.0	396.0	397.0	397.0	401.0	401.0	406.0	403.0
BOTTOM OF LAGGING Elev:	421.0	421.0	421.0	422.0	422.0	422.0	421.0	421.0	421.0	425.0	425.0	430.0	427.0	
NUMBER OF ANCHORS:	3	3	3	3	3	3	3	3	3	3	2	2	1	1
LEVEL A ANCHOR Elev:	441.0	441.0	441.0	440.0	441.0	442.0	441.0	440.0	441.0	439.0	438.0	437.0	435.0	431.0
LEVEL A ANCHOR FORCE (kip):	150.0	150.0	160.0	190.0	185.0	140.0	140.0	150.0	140.0	150.0	90.0	85.0	55.0	45.0
LEVEL B ANCHOR Elev:	433.0	433.0	433.0	432.0	433.0	434.0	433.0	432.0	433.0	431.0	430.0	429.0		
LEVEL B ANCHOR FORCE (kip):	160.0	165.0	175.0	190.0	195.0	140.0	140.0	140.0	135.0	140.0	90.0	75.0		
LEVEL C ANCHOR Elev:	425.0	425.0	425.0	424.0	425.0	426.0	425.0	424.0	425.0	423.0				
LEVEL C ANCHOR FORCE (kip):	120.0	125.0	130.0	135.0	145.0	110.0	105.0	115.0	110.0	90.0				

DATUM Elev = 386.00'

13

DEVELOPED MIRRORED ELEVATION

1" = 5'

	BY	CHECKED
DESIGN	Keith Stillmunkes	Greg Thornton
DETAILS	Jie Tang	Greg Thornton
QUANTITIES	Gerald Dickerson	Eric Chaffee

STATE OF CALIFORNIA
DEPARTMENT OF TRANSPORTATION

DIVISION OF ENGINEERING SERVICES
STRUCTURE DESIGN
DESIGN BRANCH 1

BRIDGE NO. 10E0037
POST MILE 3.75

FORMOLI SLIDE RETAINING WALL
STRUCTURE PLAN NO. 3

STRUCTURES DESIGN DETAIL SHEET (ENGLISH) (REV. 09-01-10)

ORIGINAL SCALE IN INCHES FOR REDUCED PLANS 0 1 2 3

UNIT: 3576
PROJECT NUMBER & PHASE: 01120001331
CONTRACT NO.: 01-0B5004

DISREGARD PRINTS BEARING EARLIER REVISION DATES

REVISION DATES 03/16/15 10/27/15 09/17/15

SHEET 5 OF 14

FILE => formoli-b-sp03.dgn

USERNAME => s119538 DATE PLOTTED => 18-APR-2016 TIME PLOTTED => 11:14

DIST	COUNTY	ROUTE	POST MILES TOTAL PROJECT	SHEET No.	TOTAL SHEETS
01	Men	101	3.8, 5.3	68	99

REGISTERED CIVIL ENGINEER 12-15-15 DATE

3-28-16
PLANS APPROVAL DATE

REGISTERED PROFESSIONAL ENGINEER Keith Stillmunkes No. 68878 Exp. 9-30-17 CIVIL STATE OF CALIFORNIA

The State of California or its officers or agents shall not be responsible for the accuracy or completeness of electronic copies of this plan sheet.

CURVE DATA

No. ⊕	R	Δ	T	L
①	1000.00′	73°54′07"	752.21′	1289.83′
②	1600.00′	36°56′56"	534.56′	1031.81′
③	925.00′	11°11′07"	90.58′	180.58′

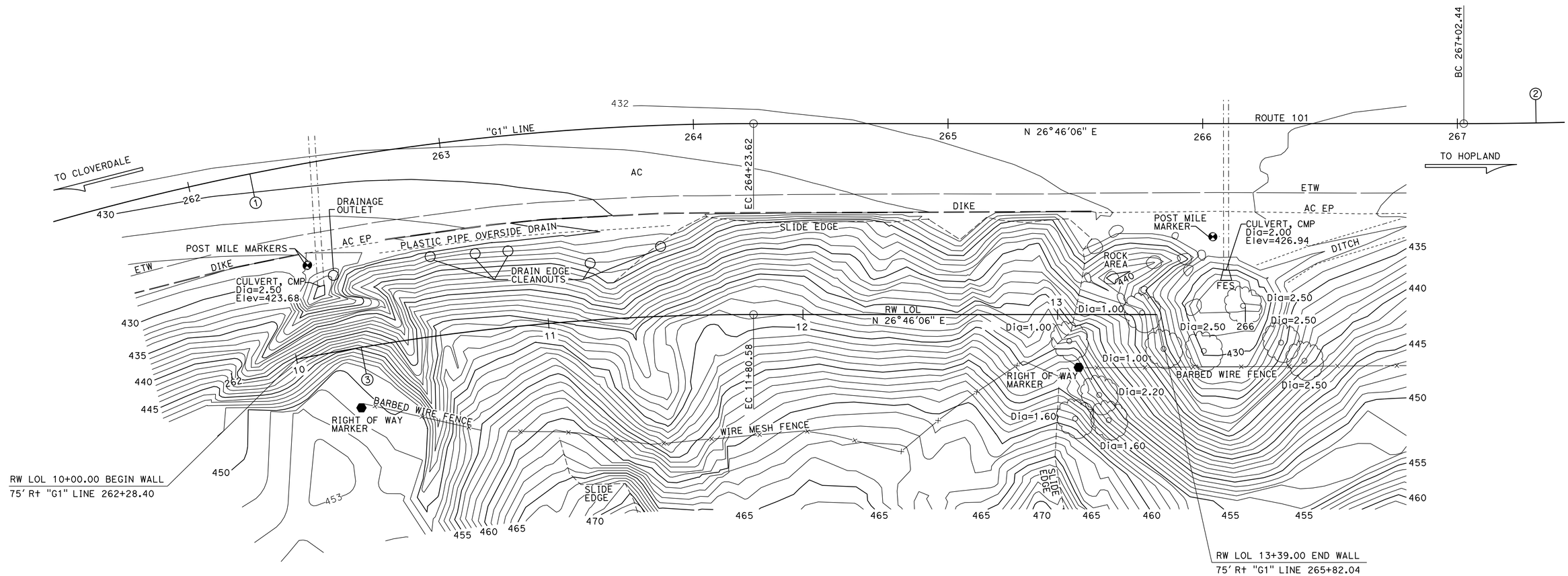

SURVEY CONTROL

MEN 101-3.75L
Fnd Brass Cap Mon.
69.88 Ft Lt Rte 101
Sta 264+07.22
N 2,090,680.96
E 6,260,847.49
Elev = 435.51

MEN 101-3.89R (NOT SHOWN ON PLAN)
Fnd Brass Cap Mon.
56.47 Ft Rt Rte 101
Sta 271+60.17
N 2,091,336.71
E 6,261,244.14
Elev = 441.50

NOTE: CONTROL MONUMENTATION UNSTABLE AND SUBJECT TO MOVEMENT.

PRELIMINARY INVESTIGATION SECTION

SCALE	VERT.DATUM NAVD88	PHOTOGRAMMETRY AS OF: X			
1"=20′	HORZ.DATUM NAD83 (2004.69)	SURVEYED	BY DISTRICT	CHECKED	BY C. FASSETT 3/2015
ALIGNMENT TIES Dist TRAVERSE SHEET		DRAFTED	BY L. YOUNG 3/2015	CHECKED	BY L. LEW 3/2015

DESIGN	BY Keith Stillmunkes	CHECKED Greg Thornton
DETAILS	BY Jie Tang	CHECKED Greg Thornton
QUANTITIES	BY Gerald Dickerson	CHECKED Eric Chaffee

STATE OF CALIFORNIA
DEPARTMENT OF TRANSPORTATION

DIVISION OF ENGINEERING SERVICES
STRUCTURE DESIGN
DESIGN BRANCH 1

BRIDGE NO. 10E0037
POST MILE 3.75

FORMOLI SLIDE RETAINING WALL
FOUNDATION PLAN

STRUCTURES FOUNDATION PLAN SHEET (ENGLISH) (REV. 09-01-10)

ORIGINAL SCALE IN INCHES FOR REDUCED PLANS 0 1 2 3

UNIT: 3576
PROJECT NUMBER & PHASE: 01120001331 CONTRACT NO.: 01-0B5004

SUBMITTAL DATE	REVISION DATES				SHEET	OF
3/5/2015	03/10/15	08/28/15	08/28/15	10/27/15	6	14

FILE => formoli-e-fp.dgn

USERNAME => s119538 DATE PLOTTED => 18-APR-2016 TIME PLOTTED => 11:14

DIST	COUNTY	ROUTE	POST MILES TOTAL PROJECT	SHEET No.	TOTAL SHEETS
01	Men	101	3.8, 5.3	69	99

REGISTERED CIVIL ENGINEER 12-15-15 DATE

3-28-16
PLANS APPROVAL DATE

REGISTERED PROFESSIONAL ENGINEER Keith Stillmunkes No. 68878 Exp. 9-30-17 CIVIL STATE OF CALIFORNIA

The State of California or its officers or agents shall not be responsible for the accuracy or completeness of electronic copies of this plan sheet.

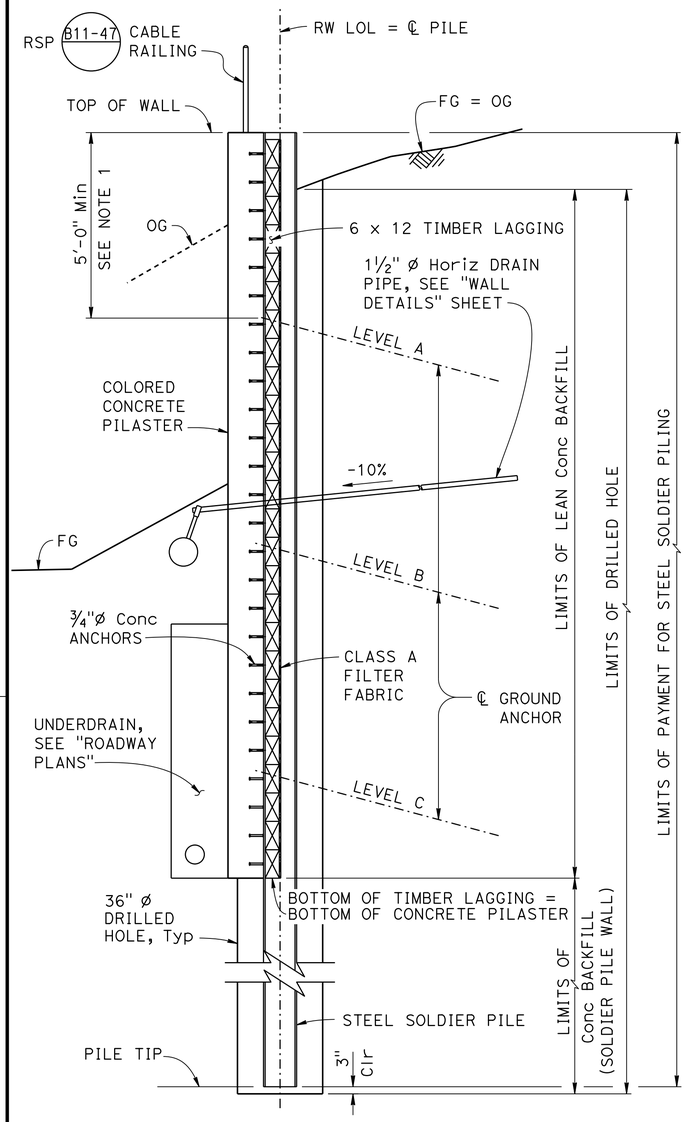

TYPICAL SECTION

⅜" = 1'-0"

NOTE:

1. Indicates minimum level of backfill prior to stressing ground anchor.

LEGEND:

Indicates Lean Concrete to remain

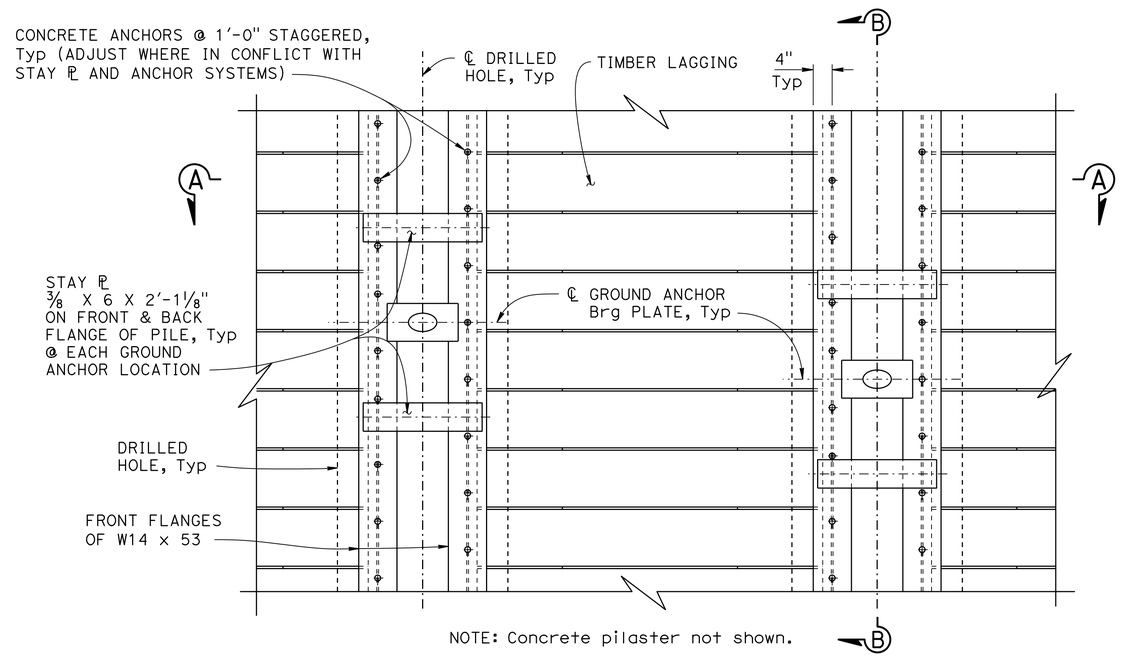

NOTE: Concrete pilaster not shown.

PART FRONT ELEVATION

¾" = 1'-0"

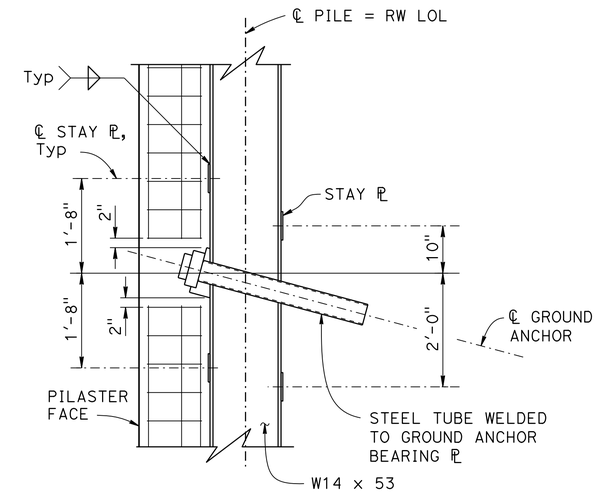

NOTE: Provide 2" reinforcement clearance around ground anchors.

SECTION B-B

1" = 1'-0"

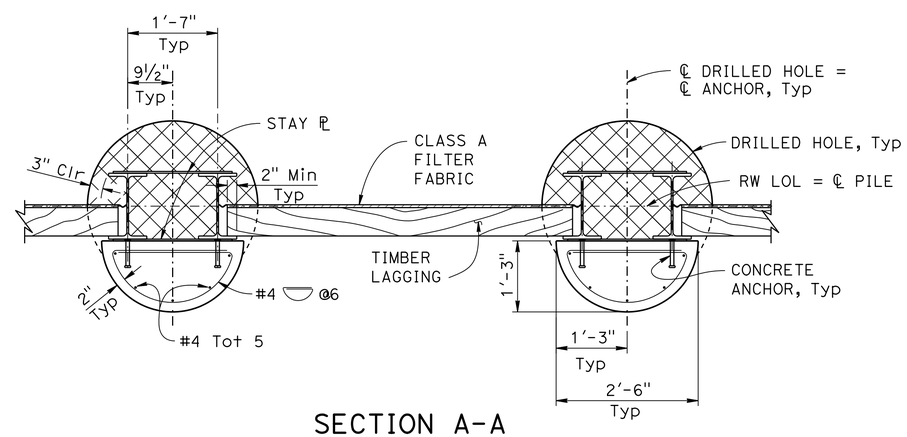

SECTION A-A

¾" = 1'-0"

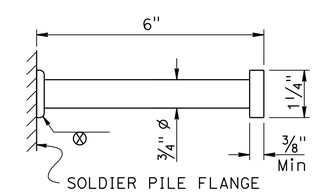

CONCRETE ANCHOR DETAIL

6" = 1'-0"

DESIGN	BY Keith Stillmunkes	CHECKED Greg Thornton	
DETAILS	BY Jie Tang	CHECKED Greg Thornton	
QUANTITIES	BY Gerald Dickerson	CHECKED Eric Chaffee	

STATE OF CALIFORNIA
DEPARTMENT OF TRANSPORTATION

DIVISION OF ENGINEERING SERVICES
STRUCTURE DESIGN
DESIGN BRANCH 1

BRIDGE NO. 10E0037
POST MILE 3.75

FORMOLI SLIDE RETAINING WALL
TYPICAL SECTION

STRUCTURES DESIGN DETAIL SHEET (ENGLISH) (REV. 09-01-10)

ORIGINAL SCALE IN INCHES FOR REDUCED PLANS 0 1 2 3

UNIT: 3576
PROJECT NUMBER & PHASE: 01120001331
CONTRACT NO.: 01-0B5004

DISREGARD PRINTS BEARING EARLIER REVISION DATES

REVISION DATES 03/16/15 11/30/15 10/27/15

SHEET 7 OF 14

FILE => formoli-f-ts.dgn

USERNAME => s119538 DATE PLOTTED => 18-APR-2016 TIME PLOTTED => 11:14

DIST	COUNTY	ROUTE	POST MILES TOTAL PROJECT	SHEET No.	TOTAL SHEETS
01	Men	101	3.8, 5.3	70	99

REGISTERED CIVIL ENGINEER 12-15-15 DATE

3-28-16
PLANS APPROVAL DATE

REGISTERED PROFESSIONAL ENGINEER Keith Stillmunkes No. 68878 Exp. 9-30-17 CIVIL STATE OF CALIFORNIA

The State of California or its officers or agents shall not be responsible for the accuracy or completeness of electronic copies of this plan sheet.

NOTES:

1. No clipping of timber lagging corners allowed.
2. Use 40d Galv wire spikes.
3. Spikes shall not be bent.

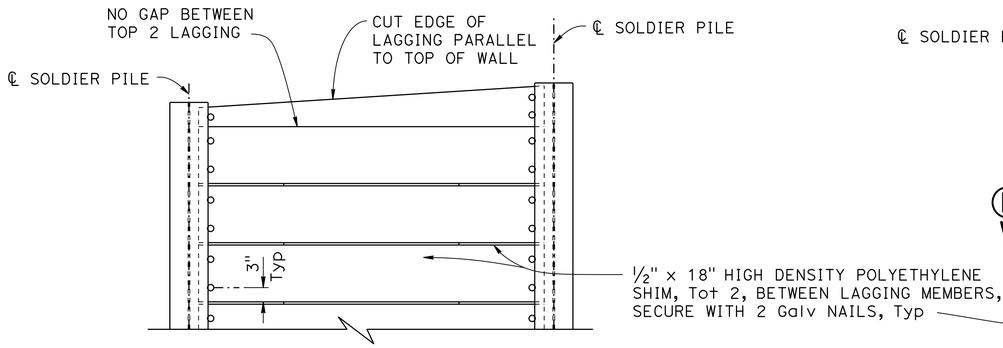

PART ELEVATION

LAGGING DETAILS (ALTERNATIVE 1)

¾" = 1'-0"

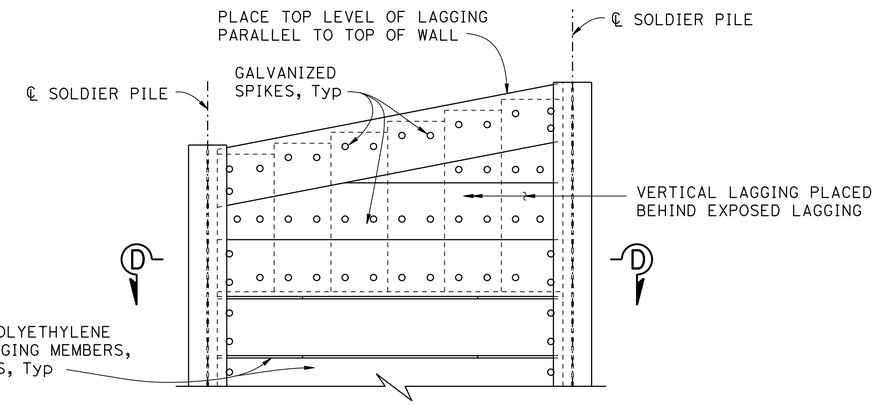

PART ELEVATION

LAGGING DETAILS (ALTERNATIVE 2)

¾" = 1'-0"

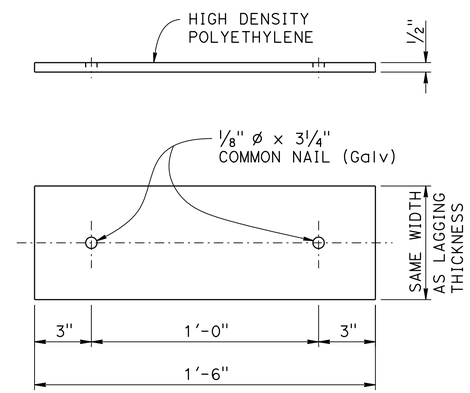

SHIM DETAIL

3" = 1'-0"

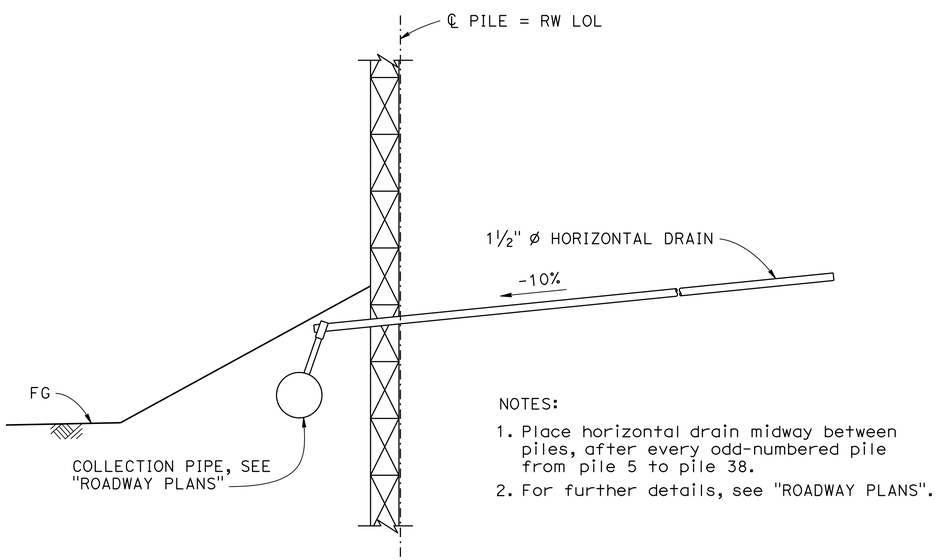

NOTES:

1. Place horizontal drain midway between piles, after every odd-numbered pile from pile 5 to pile 38.
2. For further details, see "ROADWAY PLANS".

HORIZONTAL DRAIN DETAILS

¾" = 1'-0"

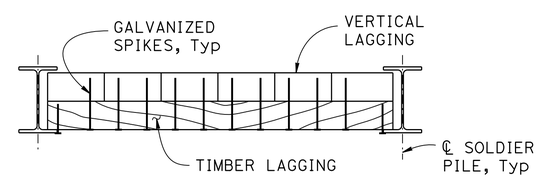

SECTION D-D

¾" = 1'-0"

LIMITS OF CLEAN & PAINT STEEL SOLDIER PILE

NO SCALE

DESIGN	BY Keith Stillmunkes	CHECKED Greg Thornton	
DETAILS	BY Jie Tang	CHECKED Greg Thornton	
QUANTITIES	BY Gerald Dickerson	CHECKED Eric Chaffee	

STATE OF CALIFORNIA
DEPARTMENT OF TRANSPORTATION

DIVISION OF ENGINEERING SERVICES
STRUCTURE DESIGN
DESIGN BRANCH 1

BRIDGE NO. 10E0037
POST MILE 3.75

FORMOLI SLIDE RETAINING WALL
WALL DETAILS

STRUCTURES DESIGN DETAIL SHEET (ENGLISH) (REV. 09-01-10)

ORIGINAL SCALE IN INCHES FOR REDUCED PLANS 0 1 2 3

UNIT: 3576
PROJECT NUMBER & PHASE: 01120001331
CONTRACT NO.: 01-0B5004

DISREGARD PRINTS BEARING EARLIER REVISION DATES

REVISION DATES 03/22/15 11/30/15 10/27/15

SHEET 8 OF 14

FILE => formoli-g-walldet.dgn

USERNAME => s119538 DATE PLOTTED => 18-APR-2016 TIME PLOTTED => 11:14

DIST	COUNTY	ROUTE	POST MILES TOTAL PROJECT	SHEET No.	TOTAL SHEETS
01	Men	101	3.8, 5.3	71	99

REGISTERED CIVIL ENGINEER 12-15-15 DATE

3-28-16
PLANS APPROVAL DATE

REGISTERED PROFESSIONAL ENGINEER Keith Stillmunkes No. 68878 Exp. 9-30-17 CIVIL STATE OF CALIFORNIA

The State of California or its officers or agents shall not be responsible for the accuracy or completeness of electronic copies of this plan sheet.

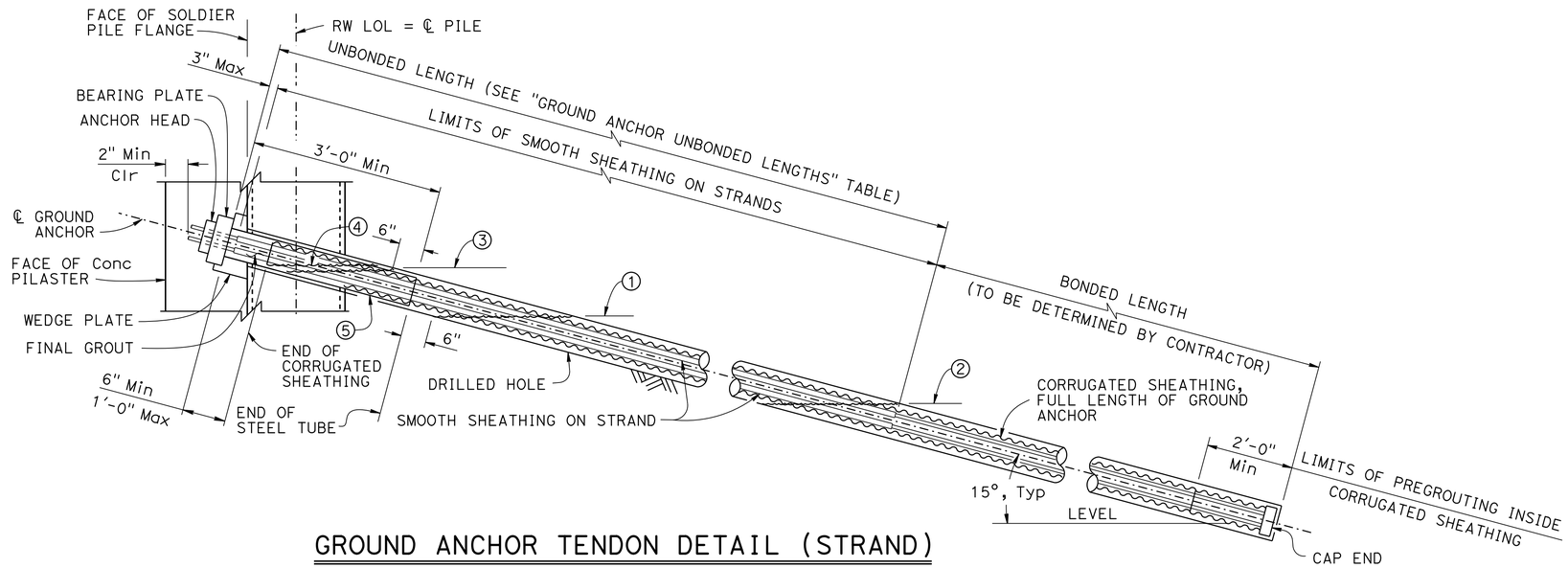

GROUND ANCHOR TENDON DETAIL (STRAND)

NO SCALE

GROUND ANCHOR UNBONDED LENGTHS

GROUND ANCHOR LEVEL	UNBONDED LENGTH (feet)
LEVEL A	80
LEVEL B	70
LEVEL C	60

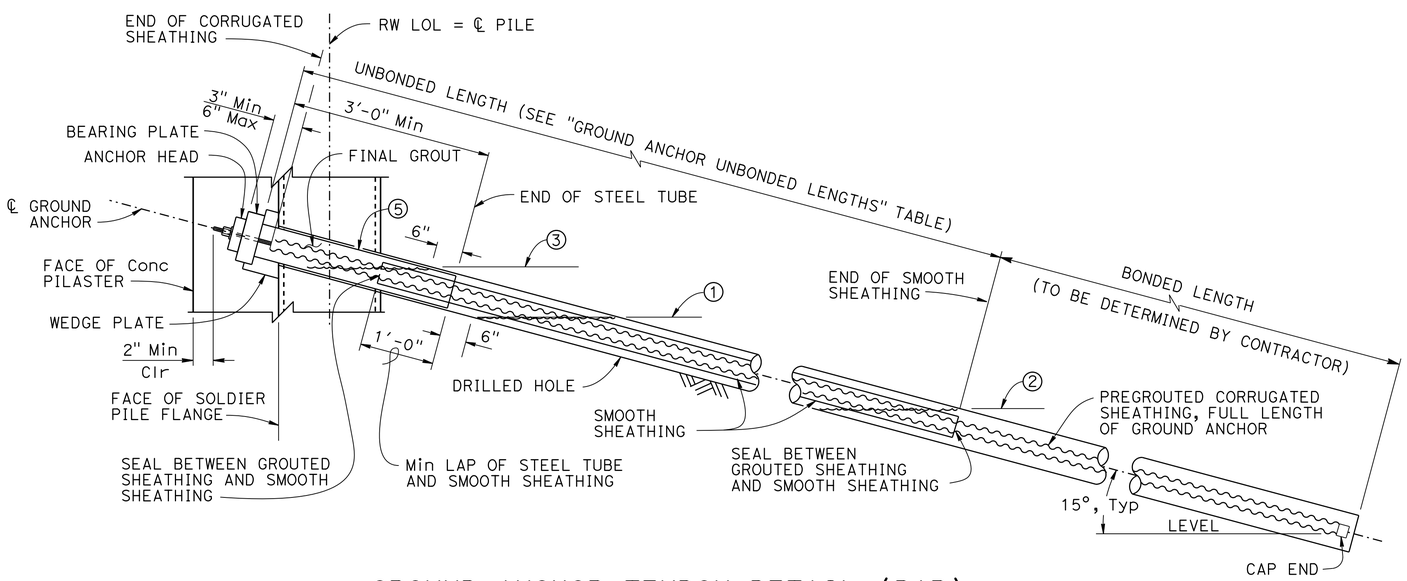

GROUND ANCHOR TENDON DETAIL (BAR)

NO SCALE

LEGEND:

1. Level of initial grouting for drilled hole 6" ø or smaller
2. Level of initial grouting for drilled hole greater than 6" ø
3. Level of secondary grouting
4. Level of initial grouting inside corrugated sheathing
5. Steel tube (Min thickness = 1/4") welded to bearing plate. Galvanize assembly after fabrication. Inside diameter of steel tube shall be at least 1" greater than the outer diameter of corrugated sheathing. Fill tube with grout.

	BY	CHECKED
DESIGN	Keith Stillmunkes	Greg Thornton
DETAILS	Jie Tang	Greg Thornton
QUANTITIES	Gerald Dickerson	Eric Chaffee

STATE OF CALIFORNIA
DEPARTMENT OF TRANSPORTATION

DIVISION OF ENGINEERING SERVICES
STRUCTURE DESIGN
DESIGN BRANCH 1

BRIDGE NO. 10E0037
POST MILE 3.75

FORMOLI SLIDE RETAINING WALL
GROUND ANCHOR DETAILS

STRUCTURES DESIGN DETAIL SHEET (ENGLISH) (REV. 09-01-10)

ORIGINAL SCALE IN INCHES FOR REDUCED PLANS 0 1 2 3

UNIT: 3576
PROJECT NUMBER & PHASE: 01120001331
CONTRACT NO.: 01-0B5004

DISREGARD PRINTS BEARING EARLIER REVISION DATES

REVISION DATES 03/17/15 08/19/15 08/27/15

SHEET 9 OF 14

FILE => formoli-h-gadet.dgn

USERNAME => s119538 DATE PLOTTED => 18-APR-2016 TIME PLOTTED => 11:14

DIST	COUNTY	ROUTE	POST MILES TOTAL PROJECT	SHEET No.	TOTAL SHEETS
01	Men	101	3.8, 5.3	72	99

REGISTERED CIVIL ENGINEER 12-15-15 DATE

3-28-16
PLANS APPROVAL DATE

REGISTERED PROFESSIONAL ENGINEER
Keith Stillmunkes
No. 68878
Exp. 9-30-17
CIVIL
STATE OF CALIFORNIA

The State of California or its officers or agents shall not be responsible for the accuracy or completeness of electronic copies of this plan sheet.

LEGEND:

- Indicates Structure Excavation (Soldier Pile Wall)
- Indicates Structure Backfill (Soldier Pile Wall)
- Indicates Roadway Excavation, see "ROADWAY PLANS"

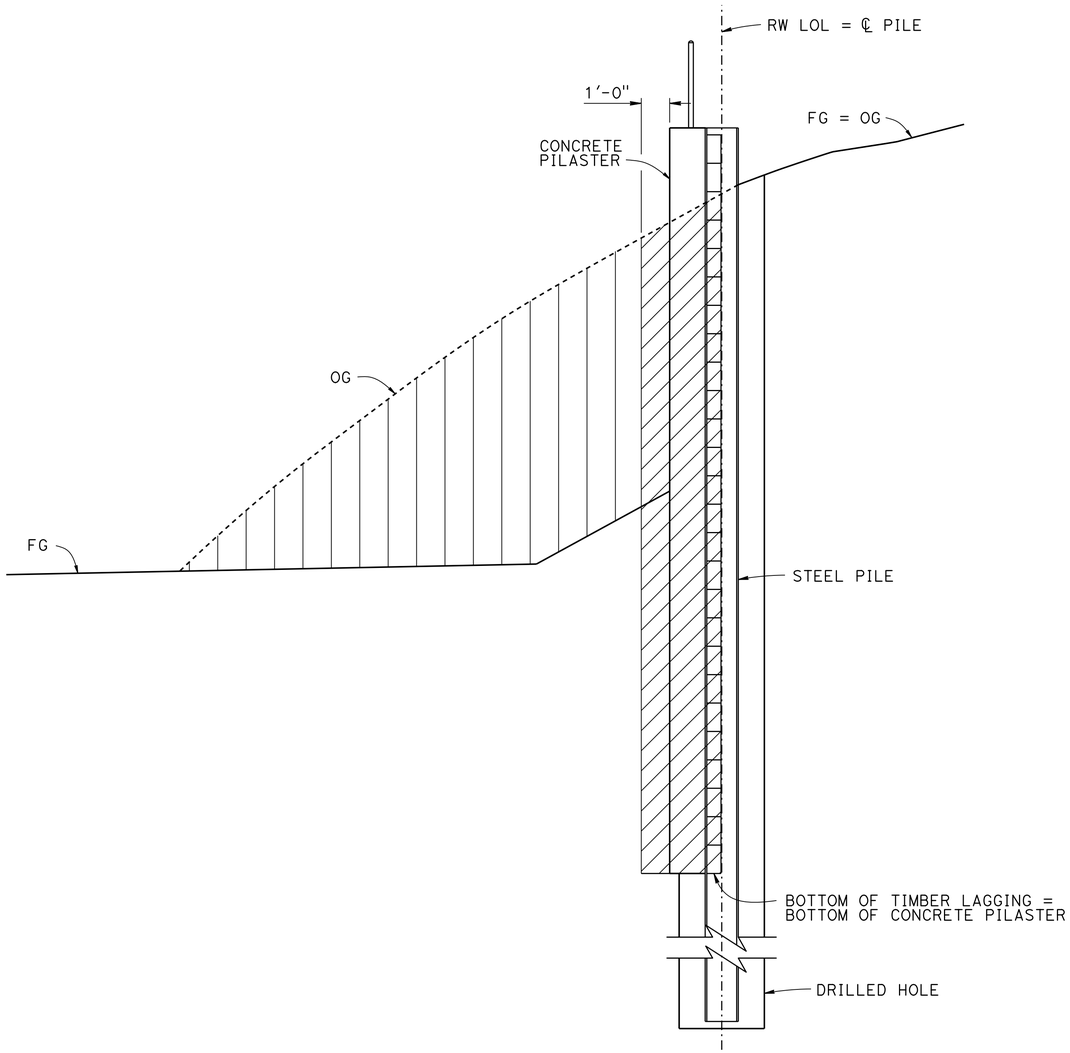

STRUCTURE EXCAVATION

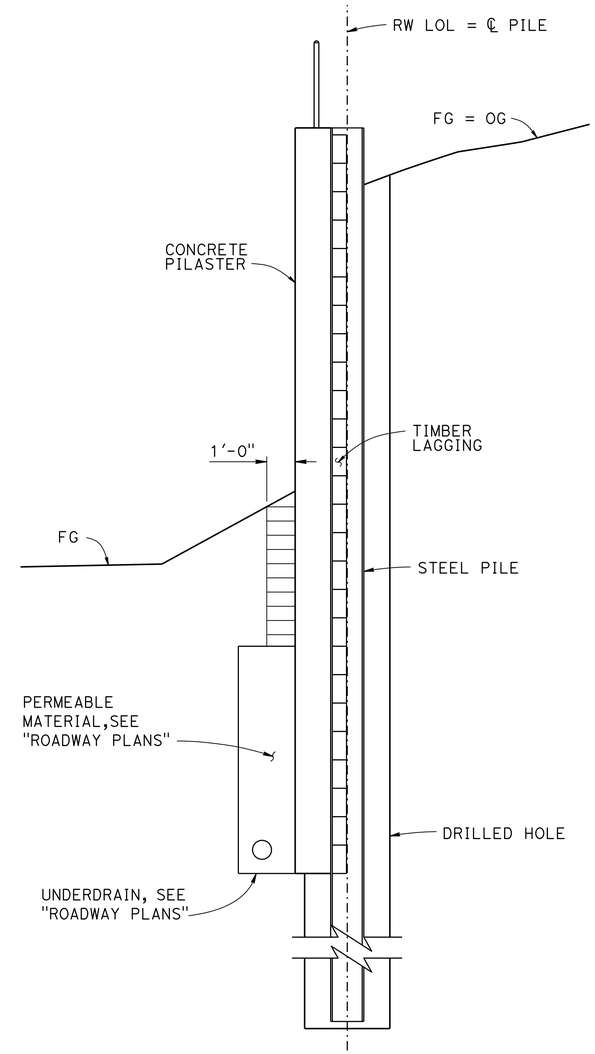

STRUCTURE BACKFILL

TYPICAL PAY LIMITS

3/8" = 1'-0"

DESIGN	BY Keith Stillmunkes	CHECKED Greg Thornton	
DETAILS	BY Jie Tang	CHECKED Greg Thornton	
QUANTITIES	BY Gerald Dickerson	CHECKED Eric Chaffee	

STATE OF CALIFORNIA
DEPARTMENT OF TRANSPORTATION

DIVISION OF ENGINEERING SERVICES
STRUCTURE DESIGN
DESIGN BRANCH 1

BRIDGE NO. 10E0037
POST MILE 3.75

FORMOLI SLIDE RETAINING WALL
EXCAVATION AND BACKFILL LIMITS

STRUCTURES DESIGN DETAIL SHEET (ENGLISH) (REV. 09-01-10)

ORIGINAL SCALE IN INCHES FOR REDUCED PLANS 0 1 2 3

UNIT: 3576
PROJECT NUMBER & PHASE: 01120001331
CONTRACT NO.: 01-0B5004

DISREGARD PRINTS BEARING EARLIER REVISION DATES

REVISION DATES 05/15/15 10/23/15 12/08/15

SHEET 10 OF 14

FILE => formoli-o-eblimits.dgn

USERNAME => s119538 DATE PLOTTED => 18-APR-2016 TIME PLOTTED => 11:14

DIST	COUNTY	ROUTE	POST MILES TOTAL PROJECT	SHEET No	TOTAL SHEETS
01	Men	101	3.8, 5.3	73	99

Ronald L. Richman 8-19-15
REGISTERED CIVIL ENGINEER DATE

3-28-16
PLANS APPROVAL DATE

REGISTERED PROFESSIONAL ENGINEER
Ron Richman
No. C0751058
Exp. 12-31-15
CIVIL
STATE OF CALIFORNIA

The State of California or its officers or agents shall not be responsible for the accuracy or completeness of electronic copies of this plan sheet.

This LOTB sheet was prepared in accordance with the Caltrans Soil & Rock Logging, Classification, & Presentation Manual (2010 Edition).

See 2010 Standard Plans A10F and A10G for Soil Legend, and A10H for Rock Legend.

BENCH MARK

BM HPGN D CA 01 C8 Elev 564
GPS Survey Station on State Hwy 175, about 8 miles Southwest of Lakeport and about 2.4 miles East of Hopland.
NAVD88

BOREHOLE	COMPLETED AS
RC-13-001	Slope inclinometer
RC-13-002	Piezometer
RC-13-003	Piezometer
RC-13-004	Piezometer
RC-13-005	Piezometer
RC-13-006	Slope inclinometer
RC-13-007	Slope inclinometer
RC-07-001	Slope inclinometer
RC-07-002	Slope inclinometer
RC-07-003	Slope inclinometer
RC-07-004	Slope inclinometer

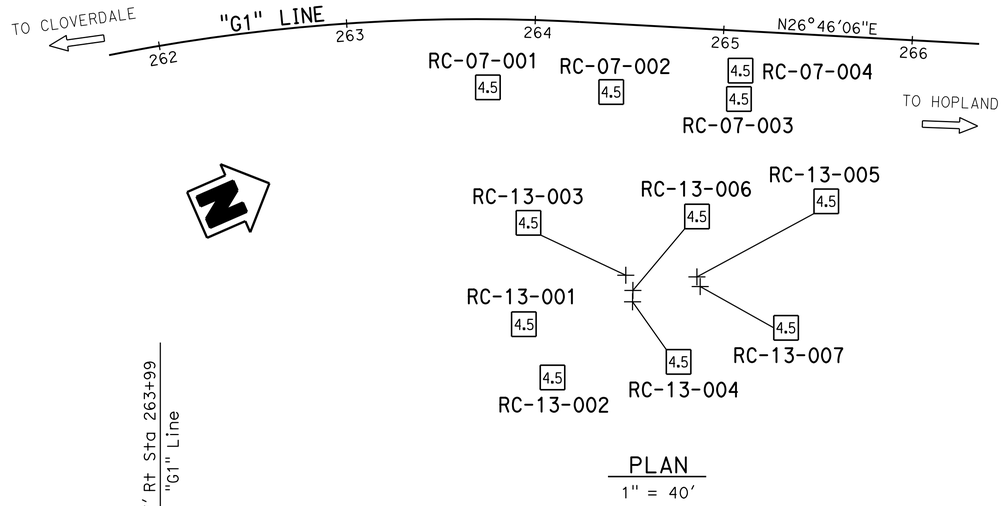

PLAN
1" = 40'

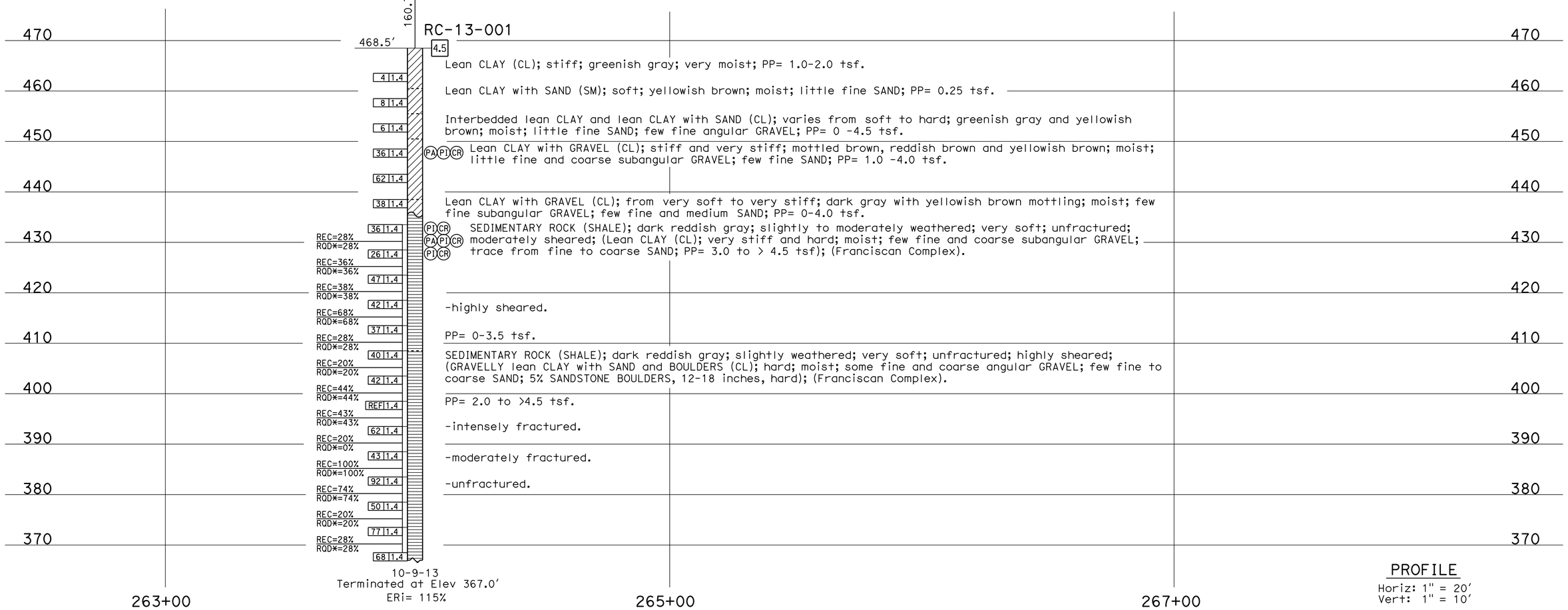

PROFILE
Horiz: 1" = 20'
Vert: 1" = 10'

ENGINEERING SERVICES	MATERIALS AND GEOTECHNICAL SERVICES	STATE OF CALIFORNIA DEPARTMENT OF TRANSPORTATION	DIVISION OF ENGINEERING SERVICES STRUCTURE DESIGN DESIGN BRANCH 1	BRIDGE NO. 10E0037 POST MILE 3.75	FORMOLI SLIDE RETAINING WALL LOG OF TEST BORINGS 1 OF 4
FUNCTIONAL SUPERVISOR NAME: T. Menard	DRAWN BY: F. Nguyen, I.G-Remmen CHECKED BY: J. Thorne	FIELD INVESTIGATION BY: T. Alderman			

OGS CIVIL LOG OF TEST BORINGS SHEET

ORIGINAL SCALE IN INCHES FOR REDUCED PLANS 0 1 2 3

UNIT: 3650
PROJECT NUMBER & PHASE: 01120001331 CONTRACT NO.: 01-0B5004

DISREGARD PRINTS BEARING EARLIER REVISION DATES

REVISION DATES: 07-03-14 10/19/15 08/22/15 SHEET 11 OF 14

FILE => formoli-z-lt01.dgn

USERNAME => s119538 DATE PLOTTED => 18-APR-2016 TIME PLOTTED => 11:14

DIST	COUNTY	ROUTE	POST MILES TOTAL PROJECT	SHEET No	TOTAL SHEETS
01	Men	101	3.8, 5.3	74	99

Ronald L Richman 8-19-15
REGISTERED CIVIL ENGINEER DATE

3-28-16
PLANS APPROVAL DATE

REGISTERED PROFESSIONAL ENGINEER
Ron Richman
No. C0751058
Exp. 12-31-15
CIVIL
STATE OF CALIFORNIA

The State of California or its officers or agents shall not be responsible for the accuracy or completeness of electronic copies of this plan sheet.

This LOTB sheet was prepared in accordance with the Caltrans Soil & Rock Logging, Classification, & Presentation Manual (2010 Edition).

See 2010 Standard Plans A10F and A10G for Soil Legend, and A10H for Rock Legend.

FOR PLAN VIEW, SEE
"LOG OF TEST BORINGS 1 OF 4"

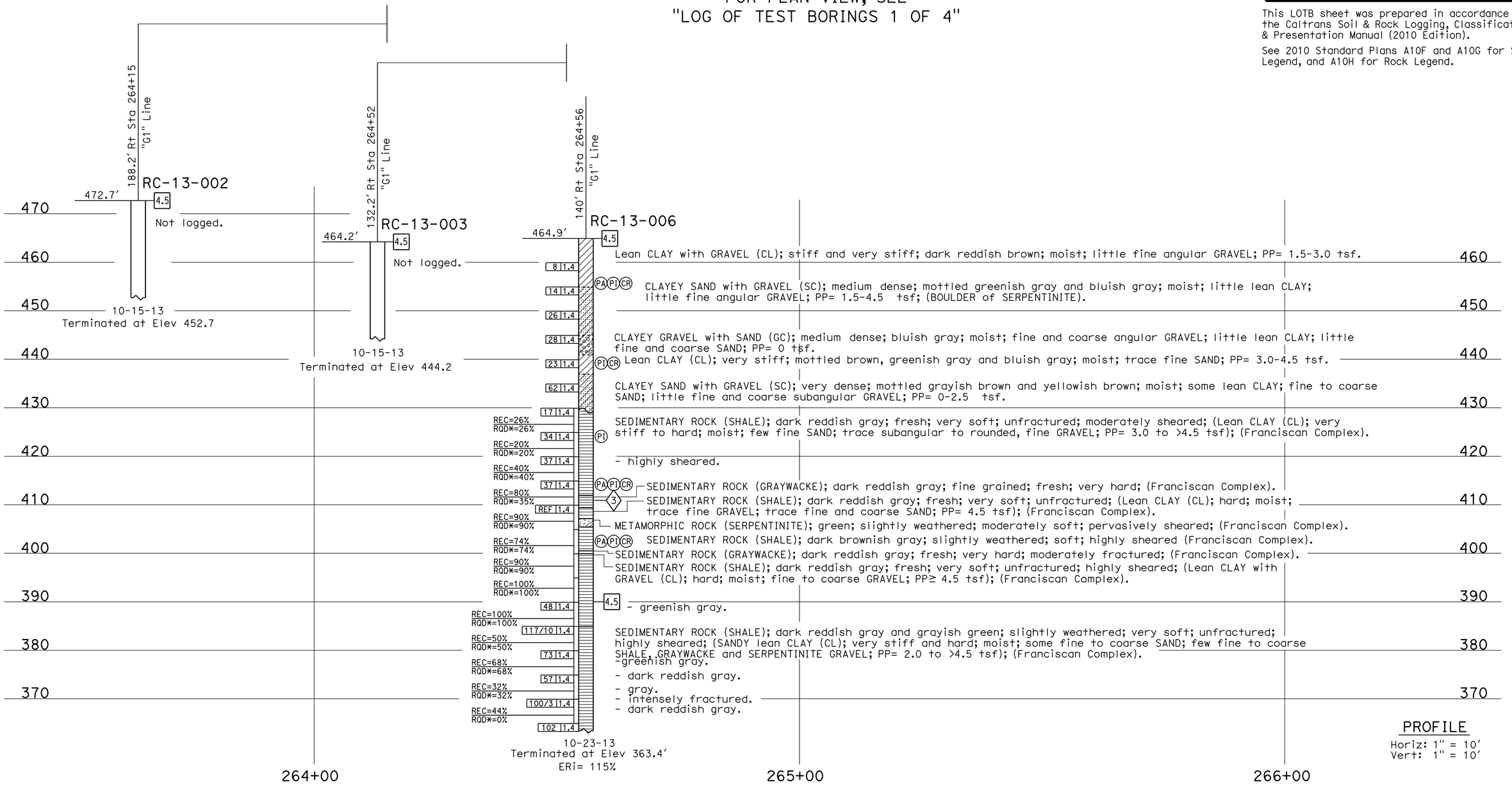

PROFILE
Horiz: 1" = 10'
Vert: 1" = 10'

ENGINEERING SERVICES	MATERIALS AND GEOTECHNICAL SERVICES	STATE OF CALIFORNIA DEPARTMENT OF TRANSPORTATION	DIVISION OF ENGINEERING SERVICES STRUCTURE DESIGN DESIGN BRANCH 1	BRIDGE NO. 10E0037 POST MILE 3.75	FORMOLI SLIDE RETAINING WALL LOG OF TEST BORINGS 2 OF 4
FUNCTIONAL SUPERVISOR NAME: T. Menard	DRAWN BY: F. Nguyen CHECKED BY: J. Thorne	FIELD INVESTIGATION BY: T. Alderman			

OGS CIVIL LOG OF TEST BORINGS SHEET

ORIGINAL SCALE IN INCHES FOR REDUCED PLANS 0 1 2 3

UNIT: 3650
PROJECT NUMBER & PHASE: 01120001331 CONTRACT NO.: 01-0B5004

DISREGARD PRINTS BEARING EARLIER REVISION DATES → REVISION DATES 07-03-14 08/27/15 08/27/15 SHEET 12 OF 14

FILE => formoli-z-lt02.dgn

USERNAME => s119538 DATE PLOTTED => 18-APR-2016 TIME PLOTTED => 11:15

DIST	COUNTY	ROUTE	POST MILES TOTAL PROJECT	SHEET No	TOTAL SHEETS
01	Men	101	3.8, 5.3	75	99

Ronald L. Richman 8-19-15
REGISTERED CIVIL ENGINEER DATE

3-28-16
PLANS APPROVAL DATE

REGISTERED PROFESSIONAL ENGINEER
Ron Richman
No. C0751058
Exp. 12-31-15
CIVIL
STATE OF CALIFORNIA

The State of California or its officers or agents shall not be responsible for the accuracy or completeness of electronic copies of this plan sheet.

This LOTB sheet was prepared in accordance with the Caltrans Soil & Rock Logging, Classification, & Presentation Manual (2010 Edition).

See 2010 Standard Plans A10F and A10G for Soil Legend, and A10H for Rock Legend.

FOR PLAN VIEW, SEE
"LOG OF TEST BORINGS 1 OF 4"

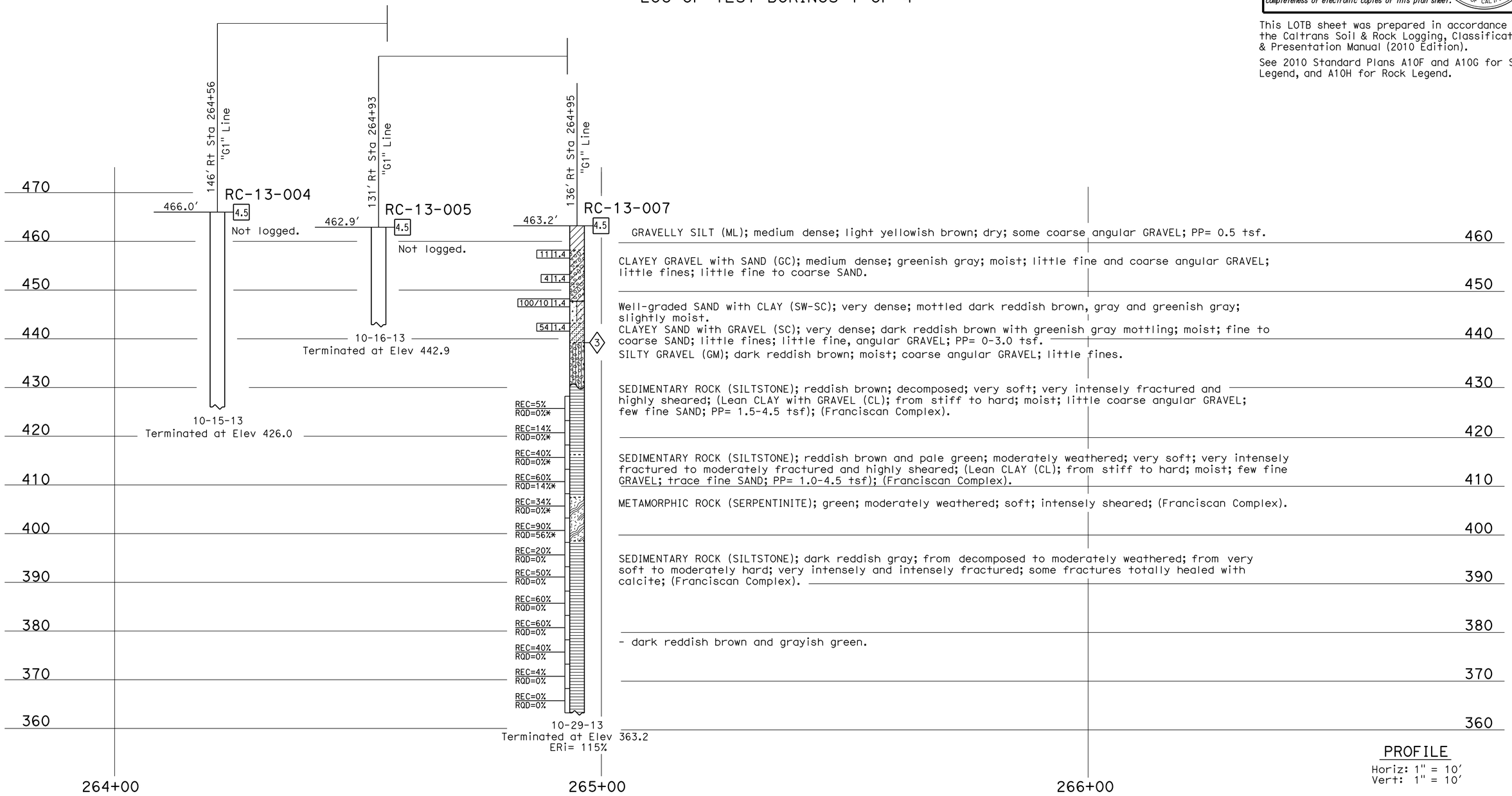

PROFILE
Horiz: 1" = 10'
Vert: 1" = 10'

ENGINEERING SERVICES	MATERIALS AND GEOTECHNICAL SERVICES	STATE OF CALIFORNIA DEPARTMENT OF TRANSPORTATION	DIVISION OF ENGINEERING SERVICES STRUCTURE DESIGN DESIGN BRANCH 1	BRIDGE NO. 10E0037 POST MILE 3.75	FORMOLI SLIDE RETAINING WALL LOG OF TEST BORINGS 3 OF 4
FUNCTIONAL SUPERVISOR NAME: T. Menard	DRAWN BY: F. Nguyen CHECKED BY: J. Thorne	FIELD INVESTIGATION BY: T. Alderman			

OGS CIVIL LOG OF TEST BORINGS SHEET

ORIGINAL SCALE IN INCHES FOR REDUCED PLANS 0 1 2 3

UNIT: 3650
PROJECT NUMBER & PHASE: 01120001331 CONTRACT NO.: 01-0B5004

DISREGARD PRINTS BEARING EARLIER REVISION DATES

REVISION DATES: 07-05-14 08/21/15 08/27/15

SHEET 13 OF 14

FILE => formoli-z-lt03.dgn

USERNAME => s119538 DATE PLOTTED => 18-APR-2016 TIME PLOTTED => 11:15

DIST	COUNTY	ROUTE	POST MILES TOTAL PROJECT	SHEET No.	TOTAL SHEETS
01	Men	101	3.8, 5.3	76	99

Luke Leong 8-19-15
REGISTERED CIVIL ENGINEER DATE

3-28-16
PLANS APPROVAL DATE

REGISTERED PROFESSIONAL ENGINEER
Luke Leong
No. C63525
Exp. 9-30-16
CIVIL
STATE OF CALIFORNIA

The State of California or its officers or agents shall not be responsible for the accuracy or completeness of electronic copies of this plan sheet.

This LOTB sheet was prepared in accordance with the Caltrans Soil & Rock Logging, Classification, & Presentation Manual (2010 Edition).

See 2010 Standard Plans A10F and A10G for Soil Legend, and A10H for Rock Legend.

FOR PLAN VIEW, SEE
"LOG OF TEST BORINGS 1 OF 4"

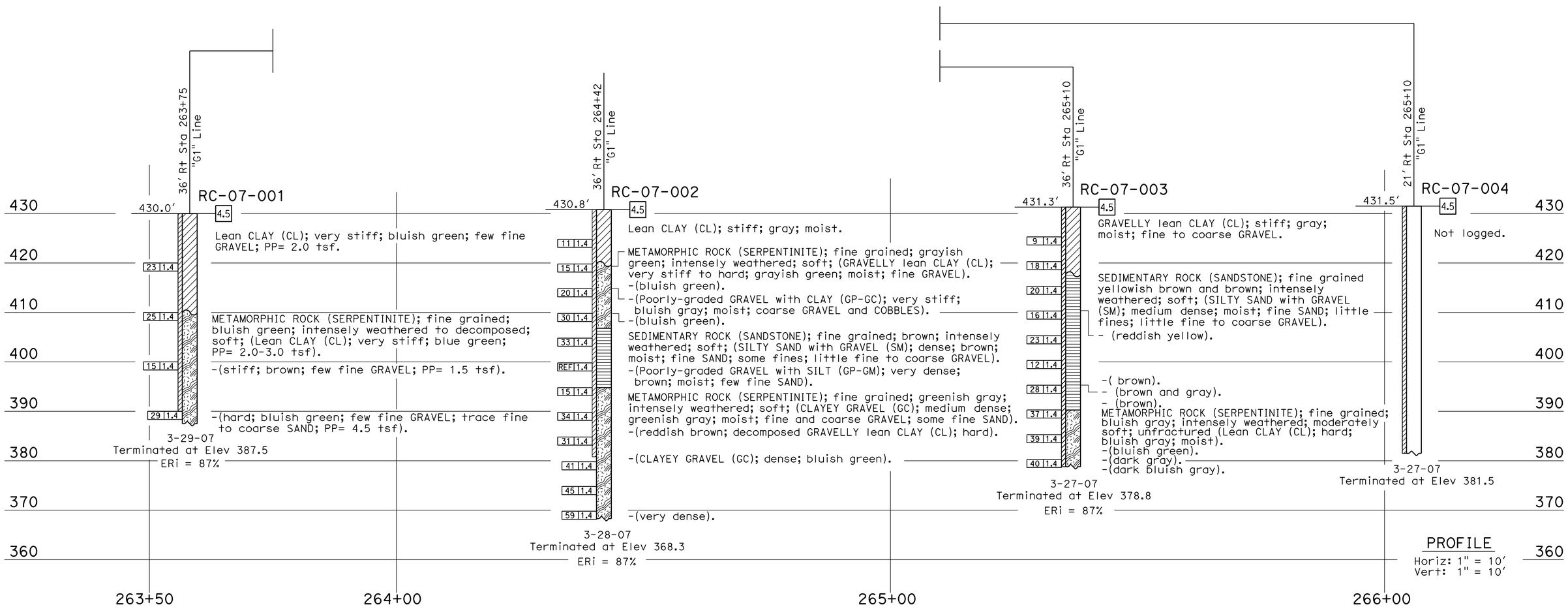

ENGINEERING SERVICES	MATERIALS AND GEOTECHNICAL SERVICES	STATE OF CALIFORNIA DEPARTMENT OF TRANSPORTATION	DIVISION OF ENGINEERING SERVICES STRUCTURE DESIGN DESIGN BRANCH 1	BRIDGE NO. 10E0037 POST MILE 3.75	FORMOLI SLIDE RETAINING WALL LOG OF TEST BORINGS 4 OF 4
FUNCTIONAL SUPERVISOR NAME: R. Buell	DRAWN BY: I. G-Remmen CHECKED BY: J. Thorne	FIELD INVESTIGATION BY: L. Leong			

OGS CIVIL LOG OF TEST BORINGS SHEET

ORIGINAL SCALE IN INCHES FOR REDUCED PLANS 0 1 2 3

UNIT: 3650
PROJECT NUMBER & PHASE: 01120001331 CONTRACT NO.: 01-0B5004

DISREGARD PRINTS BEARING EARLIER REVISION DATES

REVISION DATES: ~~05-05-15~~ 08/27/15 08/27/15

SHEET 14 OF 14

FILE => formoli-z-lt04.dgn

USERNAME => s119538 DATE PLOTTED => 18-APR-2016 TIME PLOTTED => 11:15

DIST	COUNTY	ROUTE	POST MILES TOTAL PROJECT	SHEET No.	TOTAL SHEETS
01	Men	101	3.8, 5.3	77	99

REGISTERED CIVIL ENGINEER — DATE 12-15-15

3-28-16
PLANS APPROVAL DATE

REGISTERED PROFESSIONAL ENGINEER — Keith Stillmunkes — No. 68878 — Exp. 9-30-17 — CIVIL — STATE OF CALIFORNIA

The State of California or its officers or agents shall not be responsible for the accuracy or completeness of scanned copies of this plan sheet.

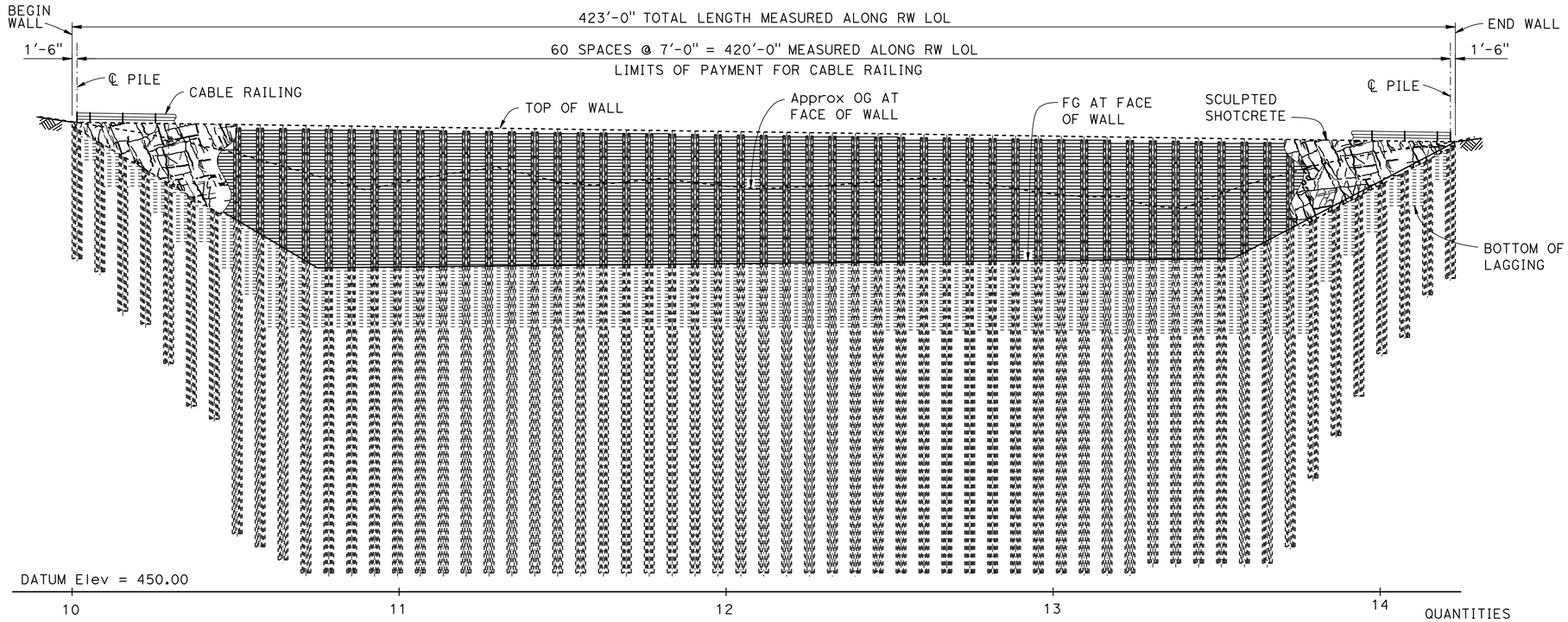

DEVELOPED MIRROR ELEVATION

1" = 20'

QUANTITIES

STRUCTURE EXCAVATION (SOLDIER PILE WALL)	1,434	CY
STRUCTURE BACKFILL (SOLDIER PILE WALL)	506	CY
CONCRETE BACKFILL (SOLDIER PILE WALL)	1,039	CY
LEAN CONCRETE BACKFILL	744	CY
GROUND ANCHOR (SUBHORIZONTAL)	361	EA
STEEL SOLDIER PILE (2 - W14 X 53)	7,140	LF
36" DRILLED HOLE	6,426	LF
BAR REINFORCING STEEL (SOLDIER PILE WALL)	77,505	LB
SCULPTED SHOTCRETE	14,469	SQFT
STRUCTURAL SHOTCRETE	822	CY
TIMBER LAGGING	98	MFBM
CLEAN AND PAINT STEEL SOLDIER PILING	LUMP	SUM
PREPARE AND STAIN SHOTCRETE	14,469	SQFT
CABLE RAILING	423	LF

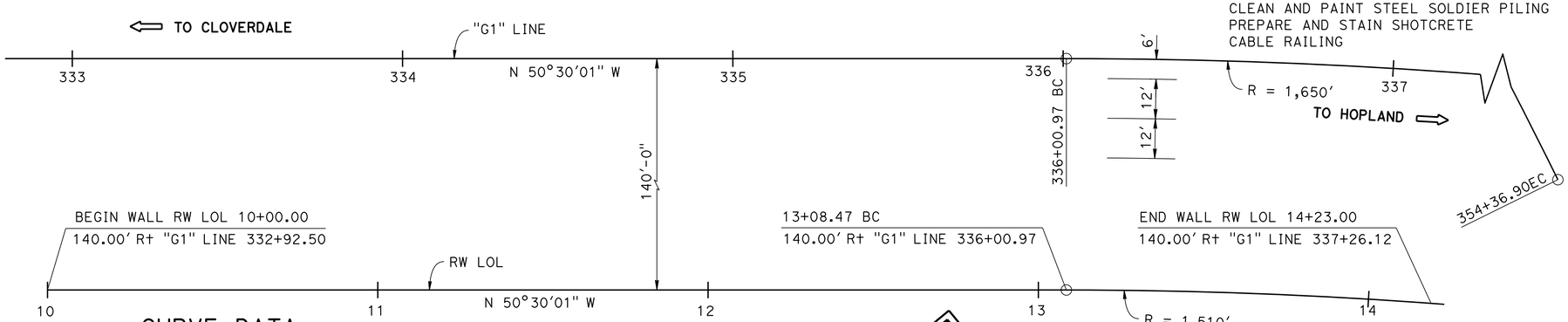

PLAN

1" = 20'

CURVE DATA

"G1" LINE	RW LOL
R = 1650.00'	R = 1510.00'
Δ = 63°45'08"	Δ = 4°20'45"
T = 1026.08'	T = 57.29'
L = 1835.93'	L = 114.53'

NOTE:
For Index to Plans, Standard Plans List, General Notes and Quantities, see "INDEX TO PLANS" sheet.

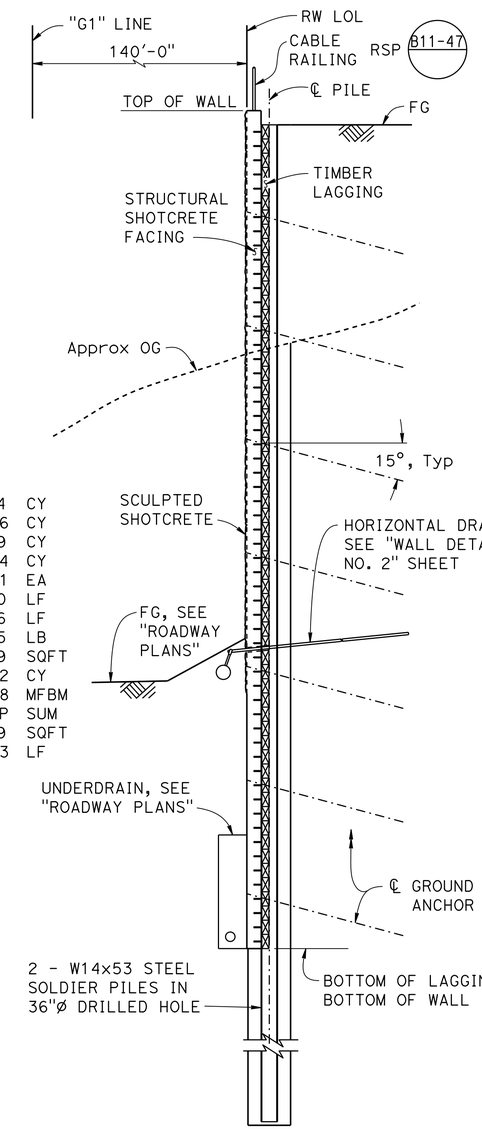

TYPICAL SECTION

3/16" = 1'-0"

Jeff Sims, DESIGN ENGINEER	DESIGN	BY Keith Stillmunkes	CHECKED Eric Chaffee	LOAD & RESISTANCE FACTOR DESIGN	
	DETAILS	BY Jie Tang	CHECKED Eric Chaffee	LAYOUT: BY Keith Stillmunkes	CHECKED Eric Chaffee
	QUANTITIES	BY Greg Thornton	CHECKED Rakesh Deo	SPECIFICATIONS: BY Karen Doll	PLANS AND SPECS COMPARED Karen Doll

ORIGINAL SCALE IN INCHES FOR REDUCED PLANS 0 1 2 3

STATE OF CALIFORNIA
DEPARTMENT OF TRANSPORTATION

DIVISION OF ENGINEERING SERVICES
STRUCTURE DESIGN
DESIGN BRANCH 1

BRIDGE NO. 10E0036
POST MILE 5.16

PEREGRINE SLIDE RETAINING WALL
GENERAL PLAN

UNIT: 3576
PROJECT NUMBER & PHASE: 01120001331
CONTRACT NO.: 01-0B5004

DISREGARD PRINTS BEARING EARLIER REVISION DATES

REVISION DATES: 04/28/15 12/08/15 12/15/15

SHEET 1 OF 23

USERNAME => s119538 DATE PLOTTED => 18-APR-2016 TIME PLOTTED => 11:15

STRUCTURES DESIGN GENERAL PLAN SHEET (ENGLISH) (REV.09-01-10)

FILE => peregrine-a-gp.dgn

DIST	COUNTY	ROUTE	POST MILES TOTAL PROJECT	SHEET No.	TOTAL SHEETS
01	Men	101	3.8, 5.3	78	99

REGISTERED CIVIL ENGINEER 12-15-15 DATE

3-28-16
PLANS APPROVAL DATE

REGISTERED PROFESSIONAL ENGINEER Keith Stillmunkes No. 68878 Exp. 9-30-17 CIVIL STATE OF CALIFORNIA

The State of California or its officers or agents shall not be responsible for the accuracy or completeness of electronic copies of this plan sheet.

ANCHOR DATA TABLE

PILE No.	PILE Tip Elev	No. OF GROUND ANCHORS	TOP LEVEL ANCHOR Elev	GROUND ANCHOR FORCE, FDL (kips)		
				TOP	MIDDLE	BOTTOM
1	502.00	1	535.00	45	N/A	N/A
2	498.00	1	535.00	45	N/A	N/A
3	486.00	2	535.00	85	N/A	50
4	482.00	2	535.00	90	N/A	50
5	470.00	3	535.00	115	100	65
6	457.00	4	535.00	155	130	100
7	453.00	4	535.00	155	130	95
8	418.00	5	535.00	185	160	120
9	414.00	6	535.00	210	180	135
10	410.00	7	534.00	260	215	170
11	406.00	7	534.00	260	215	170
12	406.00	7	534.00	255	210	170
13	406.00	7	534.00	255	215	175
14	406.00	7	534.00	255	215	175
15	406.00	7	534.00	250	215	170
16	406.00	7	534.00	250	215	170
17	406.00	7	534.00	245	215	170
18	406.00	7	534.00	245	215	170
19	406.00	7	534.00	245	215	170
20	406.00	7	533.00	260	215	160
21	406.00	7	533.00	255	210	155
22	406.00	7	533.00	255	210	155
23	406.00	7	533.00	250	210	155
24	406.00	7	533.00	250	210	155
25	406.00	7	533.00	245	210	155
26	406.00	7	533.00	245	210	155
27	406.00	7	533.00	240	210	155
28	406.00	7	533.00	240	210	155
29	406.00	7	533.00	235	210	155
30	406.00	7	532.00	250	205	140
31	406.00	7	532.00	250	205	140
32	406.00	7	532.00	245	205	140
33	406.00	7	532.00	245	205	140
34	406.00	7	532.00	240	205	140
35	406.00	7	532.00	240	205	140
36	406.00	7	532.00	240	205	140
37	406.00	7	532.00	240	210	155
38	406.00	7	532.00	240	210	155
39	406.00	7	532.00	235	210	155
40	406.00	7	532.00	235	205	155
41	406.00	7	531.00	250	205	140
42	406.00	7	531.00	245	205	140
43	406.00	7	531.00	245	205	140
44	406.00	7	531.00	240	205	140
45	406.00	7	531.00	240	200	140
46	406.00	7	531.00	235	200	140
47	406.00	7	531.00	235	205	150
48	409.00	7	531.00	235	205	150
49	409.00	7	531.00	230	200	150
50	409.00	7	531.00	230	205	150
51	409.00	7	530.00	245	205	140
52	409.00	7	530.00	245	205	140
53	409.00	7	530.00	245	205	140
54	414.00	7	530.00	245	210	140
55	435.00	5	530.00	190	160	110
56	448.00	4	530.00	160	135	95
57	460.00	3	530.00	125	110	80
58	473.00	2	529.00	100	N/A	55
59	478.00	2	529.00	100	N/A	55
60	491.00	1	529.00	50	N/A	N/A
61	496.00	1	529.00	55	N/A	N/A

INDEX TO PLANS

SHEET NO.	TITLE
1.	GENERAL PLAN
2.	INDEX TO PLANS
3.	STRUCTURE PLAN NO. 1
4.	STRUCTURE PLAN NO. 2
5.	STRUCTURE PLAN NO. 3
6.	FOUNDATION PLAN
7.	TYPICAL SECTION
8.	WALL DETAILS NO. 1
9.	WALL DETAILS NO. 2
10.	GROUND ANCHOR DETAILS
11.	EXCAVATION AND BACKFILL LIMITS
12.	ARCHITECTURAL TREATMENT
13.	CONSTRUCTION SEQUENCE
14.	LOG OF TEST BORINGS 1 OF 10
15.	LOG OF TEST BORINGS 2 OF 10
16.	LOG OF TEST BORINGS 3 OF 10
17.	LOG OF TEST BORINGS 4 OF 10
18.	LOG OF TEST BORINGS 5 OF 10
19.	LOG OF TEST BORINGS 6 OF 10
20.	LOG OF TEST BORINGS 7 OF 10
21.	LOG OF TEST BORINGS 8 OF 10
22.	LOG OF TEST BORINGS 9 OF 10
23.	LOG OF TEST BORINGS 10 OF 10

STANDARD PLANS DATED 2010

A10A	ABBREVIATIONS (SHEET 1 OF 2)
RSP A10B	ABBREVIATIONS (SHEET 2 OF 2)
A10C	LINES AND SYMBOLS (SHEET 1 OF 3)
A10D	LINES AND SYMBOLS (SHEET 2 OF 3)
A10E	LINES AND SYMBOLS (SHEET 3 OF 3)
RSP A10F	LEGEND - SOIL (SHEET 1 OF 2)
RSP A10G	LEGEND - SOIL (SHEET 2 OF 2)
A10H	LEGEND - ROCK
RSP B11-47	CABLE RAILING

GENERAL NOTES
LOAD AND RESISTANCE FACTOR DESIGN

DESIGN:

AASHTO LRFD Bridge Design Specifications, 2012 Edition and the California Amendments dated January 2014

SOIL PARAMETERS:

(For determination of design lateral earth pressures)

Water saturation elevation = 529 ft

Earthen buttress behind wall : $\phi = 26°$, $\gamma_m = 125$ pcf, c = 200 psf

Original ground above 529 ft: $\phi = 23°$, $\gamma_m = 125$ pcf, c = 0 psf

Original ground between 499 ft and 529 ft: $\phi = 23°$, $\gamma_{buoyant} = 68$ pcf, c = 0 psf

Soil between 484 ft and 499 ft: $\phi = 28°$, $\gamma_{buoyant} = 73$ pcf, c = 200 psf

Soil between 483 ft and 484 ft: $\phi = 12°$, $\gamma_{buoyant} = 68$ pcf, c = 100 psf

Soil below 483 ft: $\phi = 35°$, $\gamma_{buoyant} = 78$ pcf, c = 500 psf

SEISMIC PARAMETERS:

$K_h = 0.24$ g

$K_v = 0.12$ g

LANDSLIDE RETENTION FORCE:

Horizontal Landslide Retention Force (LRF) = 220 k/ft

Application of LRF: Between RW LOL 10+80 and RW LOL 13+50

PRESTRESSING STEEL:
(GROUND ANCHORS)

Strands - 270 ksi low relaxation steel

Bars - 150 ksi

FTL = Factored Test Load Per Anchor (kips)

FDL = Factored Design Load Per Anchor (kips)

Max FDL = 280 kips

FTL = 1.0 FDL

LL = Lock off Load = 0.55 FDL

f_{pu} = Minimum ultimate tensile stress of steel in ground anchor (ksi)

A_s(Min) = Minimum cross sectional area of prestressing steel in Ground Anchor (in^2)

Strands: $A_s(\text{Min}) = \dfrac{1.0\ \text{FTL}}{0.75\ f_{pu}}$

Bars: $A_s(\text{Min}) = \dfrac{1.0\ \text{FTL}}{0.80\ f_{pu}}$

REINFORCED CONCRETE:

$f'_c = 3.6$ ksi

$f_y = 60$ ksi

n = 8

STRUCTURAL STEEL:

$f_y = 50$ ksi

	BY	CHECKED
DESIGN	Keith Stillmunkes	Eric Chaffee
DETAILS	Jie Tang	Eric Chaffee
QUANTITIES	Greg Thornton	Rakesh Deo

STATE OF CALIFORNIA
DEPARTMENT OF TRANSPORTATION

DIVISION OF ENGINEERING SERVICES
STRUCTURE DESIGN
DESIGN BRANCH 1

BRIDGE NO. 10E0036
POST MILE 5.16

PEREGRINE SLIDE RETAINING WALL
INDEX TO PLANS

STRUCTURES DESIGN DETAIL SHEET (ENGLISH) (REV. 09-01-10)

ORIGINAL SCALE IN INCHES FOR REDUCED PLANS 0 1 2 3

UNIT: 3576
PROJECT NUMBER & PHASE: 01120001331
CONTRACT NO.: 01-0B5004

DISREGARD PRINTS BEARING EARLIER REVISION DATES

REVISION DATES 04/29/15 12/15/15 10/28/15

SHEET 2 OF 23

FILE => peregrine-a-itp.dgn

USERNAME => s113538 DATE PLOTTED => 18-APR-2016 TIME PLOTTED => 11:15

DIST	COUNTY	ROUTE	POST MILES TOTAL PROJECT	SHEET No.	TOTAL SHEETS
01	Men	101	3.8, 5.3	79	99

REGISTERED CIVIL ENGINEER 12-15-15 DATE

3-28-16
PLANS APPROVAL DATE

REGISTERED PROFESSIONAL ENGINEER Keith Stillmunkes No. 68878 Exp. 9-30-17 CIVIL STATE OF CALIFORNIA

The State of California or its officers or agents shall not be responsible for the accuracy or completeness of electronic copies of this plan sheet.

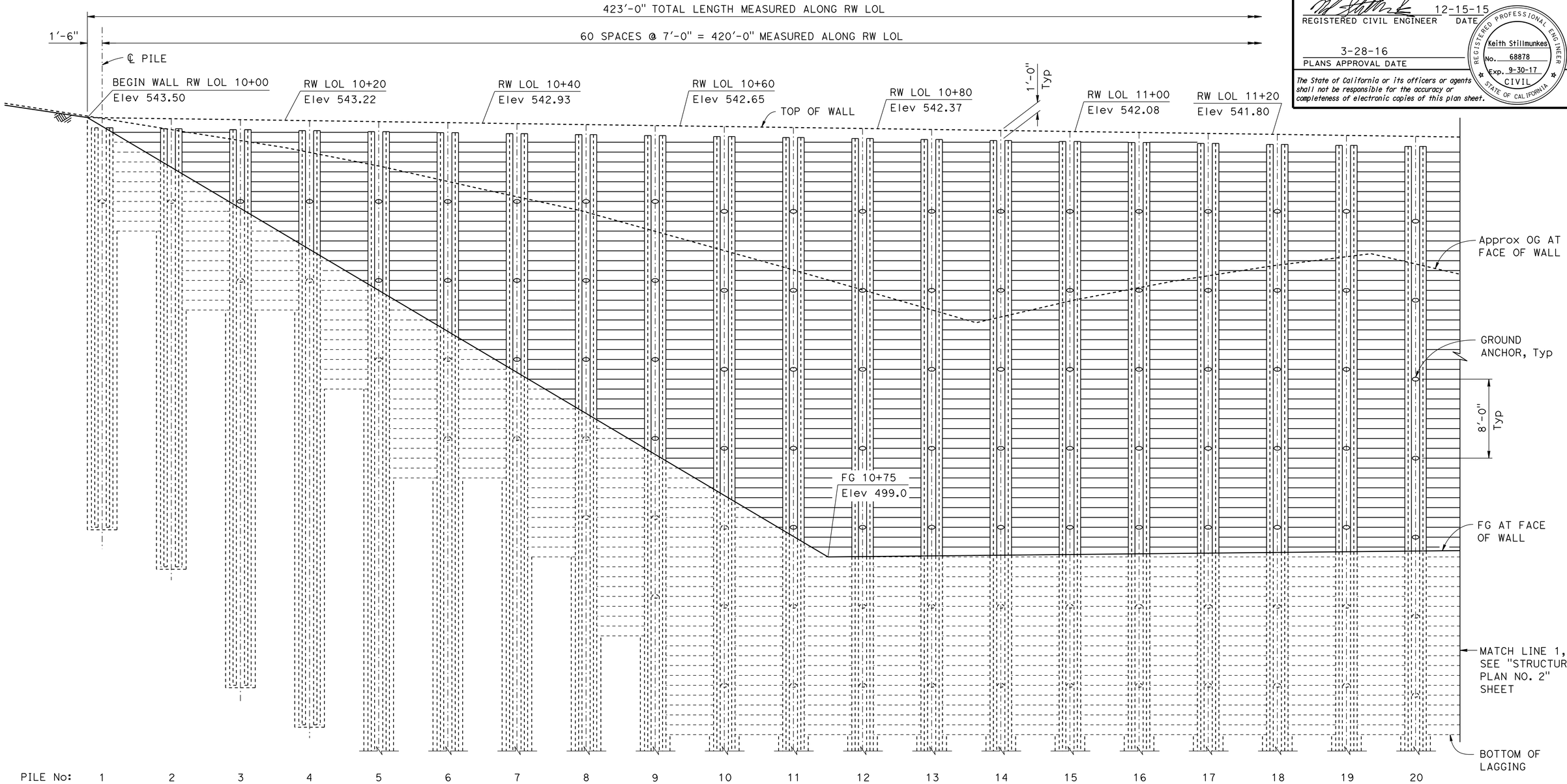

DEVELOPED MIRRORED ELEVATION

1" = 5'

NOTES:
1. Cable railing and shotcrete facing not shown.
2. For additional pile and anchor information, see "INDEX TO PLANS" sheet.

	BY	CHECKED
DESIGN	Keith Stillmunkes	Eric Chaffee
DETAILS	Jie Tang	Eric Chaffee
QUANTITIES	Greg Thornton	Rakesh Deo

STATE OF CALIFORNIA
DEPARTMENT OF TRANSPORTATION

DIVISION OF ENGINEERING SERVICES
STRUCTURE DESIGN
DESIGN BRANCH 1

BRIDGE NO. 10E0036
POST MILE 5.16

PEREGRINE SLIDE RETAINING WALL
STRUCTURE PLAN NO. 1

STRUCTURES DESIGN DETAIL SHEET (ENGLISH) (REV. 09-01-10)

ORIGINAL SCALE IN INCHES FOR REDUCED PLANS 0 1 2 3

UNIT: 3576
PROJECT NUMBER & PHASE: 01120001331
CONTRACT NO.: 01-0B5004

DISREGARD PRINTS BEARING EARLIER REVISION DATES

REVISION DATES 05/04/15 09/03/15 09/08/15

SHEET 3 OF 23

FILE => peregrine-b-sp01.dgn

USERNAME => s119538 DATE PLOTTED => 18-APR-2016 TIME PLOTTED => 11:15

DIST	COUNTY	ROUTE	POST MILES TOTAL PROJECT	SHEET No.	TOTAL SHEETS
01	Men	101	3.8, 5.3	80	99

REGISTERED CIVIL ENGINEER 12-15-15 DATE

3-28-16
PLANS APPROVAL DATE

REGISTERED PROFESSIONAL ENGINEER
Keith Stillmunkes
No. 68878
Exp. 9-30-17
CIVIL
STATE OF CALIFORNIA

The State of California or its officers or agents shall not be responsible for the accuracy or completeness of electronic copies of this plan sheet.

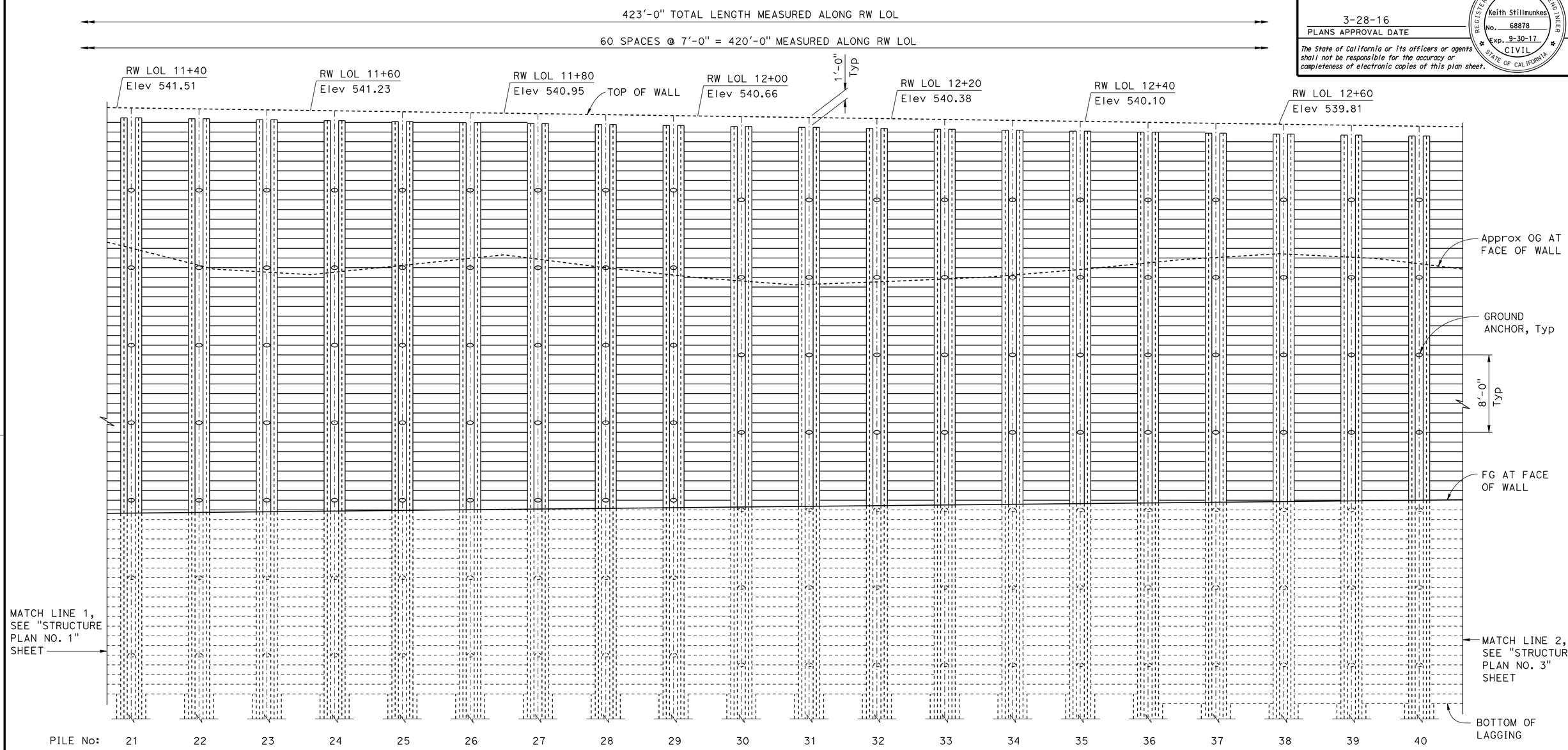

12

DEVELOPED MIRRORED ELEVATION

1" = 5'

NOTES:

1. Cable railing and shotcrete facing not shown.
2. For additional pile and anchor information, see "INDEX TO PLANS" sheet.

	BY	CHECKED
DESIGN	Keith Stillmunkes	Eric Chaffee
DETAILS	Jie Tang	Eric Chaffee
QUANTITIES	Greg Thornton	Rakesh Deo

STATE OF CALIFORNIA
DEPARTMENT OF TRANSPORTATION

DIVISION OF ENGINEERING SERVICES
STRUCTURE DESIGN
DESIGN BRANCH 1

BRIDGE NO. 10E0036
POST MILE 5.16

PEREGRINE SLIDE RETAINING WALL
STRUCTURE PLAN NO. 2

STRUCTURES DESIGN DETAIL SHEET (ENGLISH) (REV. 09-01-10)

ORIGINAL SCALE IN INCHES FOR REDUCED PLANS 0 1 2 3

UNIT: 3576
PROJECT NUMBER & PHASE: 01120001331
CONTRACT NO.: 01-0B5004

DISREGARD PRINTS BEARING EARLIER REVISION DATES

REVISION DATES: 05/04/15 10/27/15 09/08/15

SHEET 4 OF 23

FILE => peregrine-b-sp02.dgn

USERNAME => s119538 DATE PLOTTED => 18-APR-2016 TIME PLOTTED => 11:15

DIST	COUNTY	ROUTE	POST MILES TOTAL PROJECT	SHEET No.	TOTAL SHEETS
01	Men	101	3.8, 5.3	81	99

REGISTERED CIVIL ENGINEER 12-15-15 DATE

3-28-16
PLANS APPROVAL DATE

REGISTERED PROFESSIONAL ENGINEER Keith Stillmunkes No. 68878 Exp. 9-30-17 CIVIL STATE OF CALIFORNIA

The State of California or its officers or agents shall not be responsible for the accuracy or completeness of electronic copies of this plan sheet.

NOTES:
1. Cable railing and shotcrete facing not shown.
2. For additional pile and anchor information, see "INDEX TO PLANS" sheet.

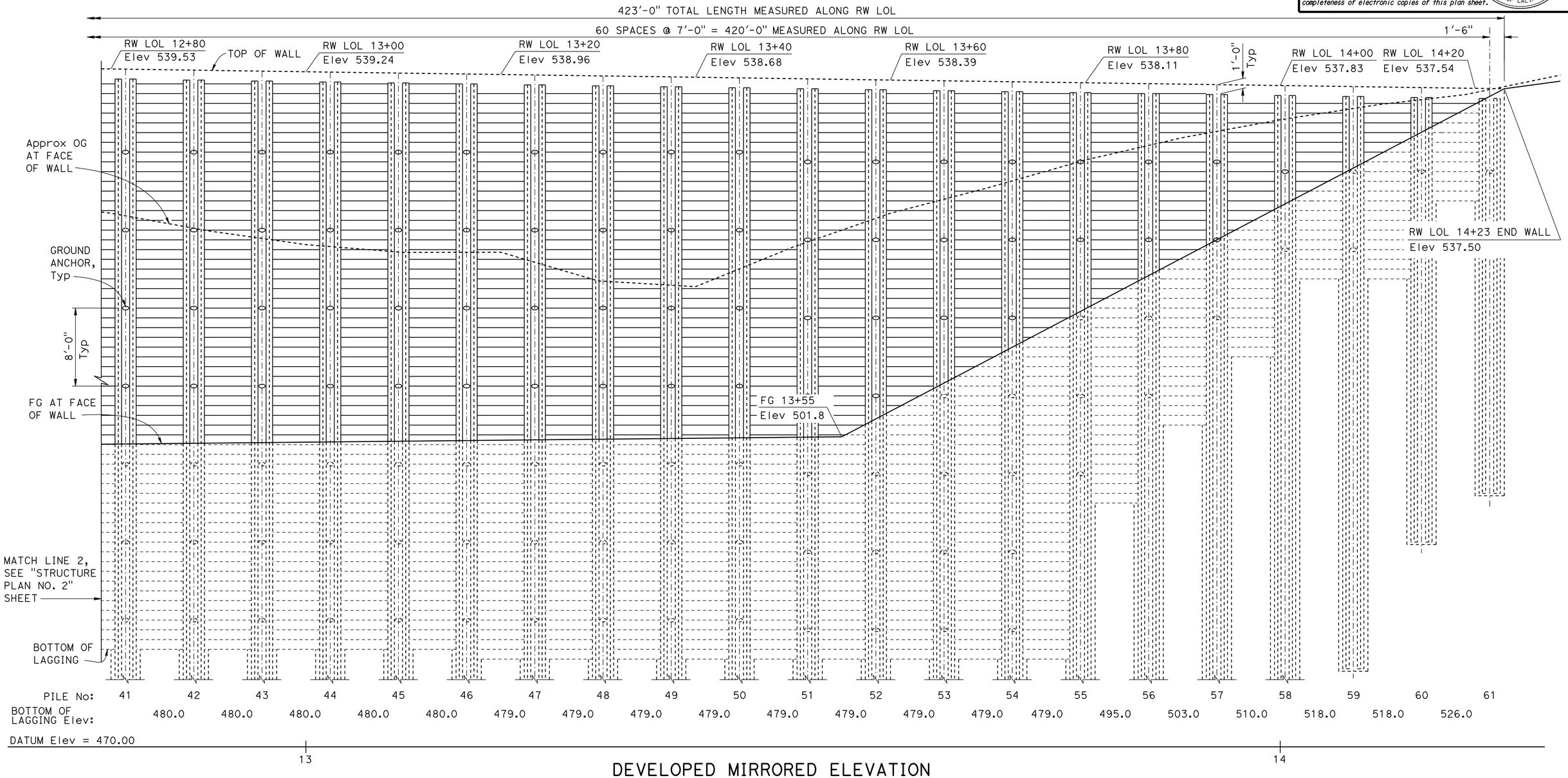

DEVELOPED MIRRORED ELEVATION

1" = 5'

DESIGN	BY Keith Stillmunkes	CHECKED Eric Chaffee	
DETAILS	BY Jie Tang	CHECKED Eric Chaffee	
QUANTITIES	BY Greg Thornton	CHECKED Rakesh Deo	

STATE OF CALIFORNIA
DEPARTMENT OF TRANSPORTATION

DIVISION OF ENGINEERING SERVICES
STRUCTURE DESIGN
DESIGN BRANCH 1

BRIDGE NO. 10E0036
POST MILE 5.16

PEREGRINE SLIDE RETAINING WALL
STRUCTURE PLAN NO. 3

STRUCTURES DESIGN DETAIL SHEET (ENGLISH) (REV. 09-01-10)

ORIGINAL SCALE IN INCHES FOR REDUCED PLANS 0 1 2 3

UNIT: 3576
PROJECT NUMBER & PHASE: 01120001331
CONTRACT NO.: 01-0B5004

DISREGARD PRINTS BEARING EARLIER REVISION DATES

REVISION DATES: 05/04/15 09/08/15 08/19/15

SHEET 5 OF 23

FILE => peregrine-b-sp03.dgn

USERNAME => s119538 DATE PLOTTED => 18-APR-2016 TIME PLOTTED => 11:15

DIST	COUNTY	ROUTE	POST MILES TOTAL PROJECT	SHEET No.	TOTAL SHEETS
01	Men	101	3.8, 5.3	82	99

REGISTERED CIVIL ENGINEER 12-15-15 DATE

3-28-16
PLANS APPROVAL DATE

REGISTERED PROFESSIONAL ENGINEER Keith Stillmunkes No. 68878 Exp. 9-30-17 CIVIL STATE OF CALIFORNIA

The State of California or its officers or agents shall not be responsible for the accuracy or completeness of electronic copies of this plan sheet.

CURVE DATA

No. ⊕	R	Δ	T	L
①	1650.00′	63°45′08″	1026.08′	1835.93′
②	1510.00′	4°20′45″	57.29′	114.53′

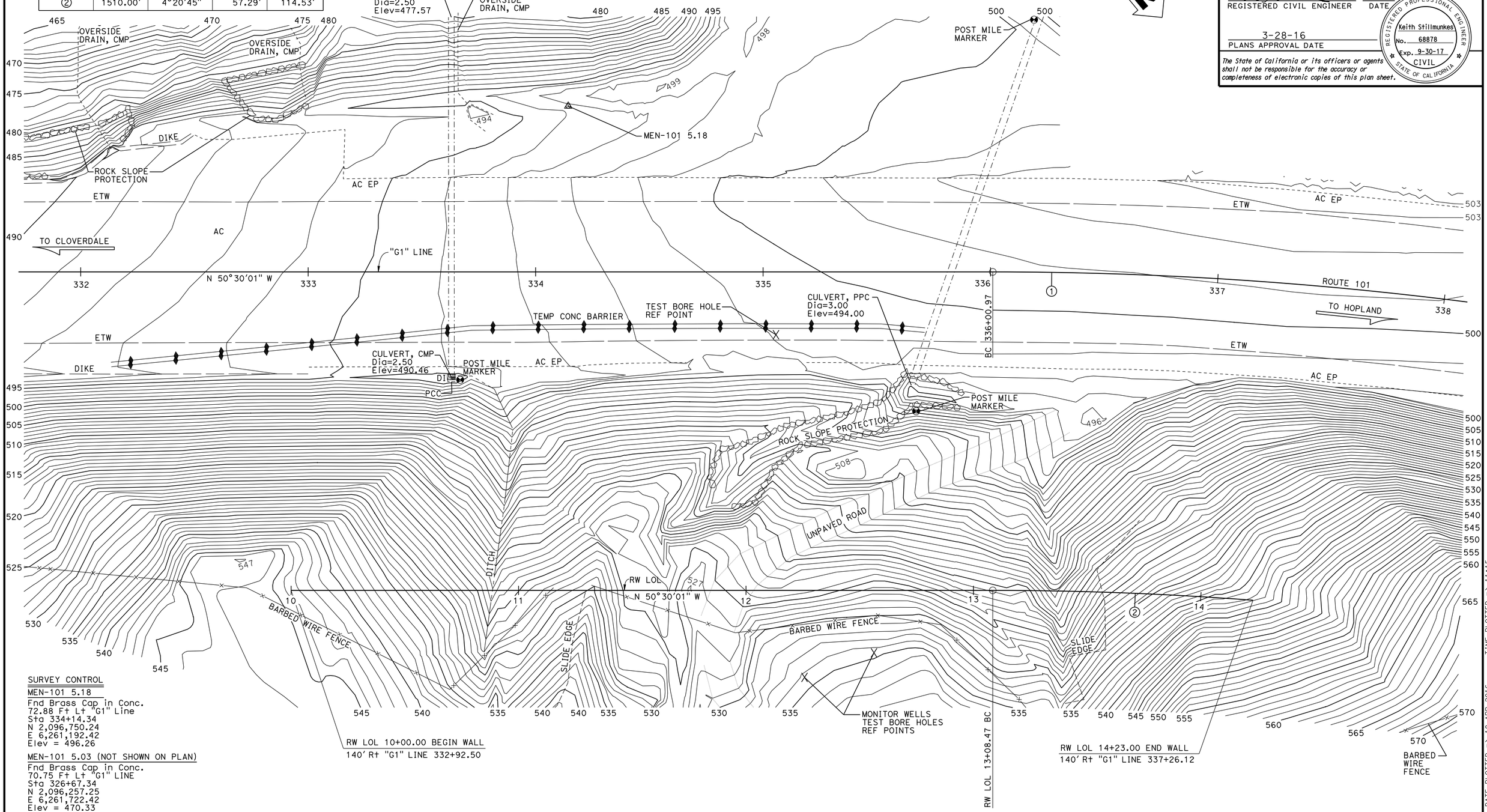

SURVEY CONTROL

MEN-101 5.18
Fnd Brass Cap in Conc.
72.88 Ft Lt "G1" Line
Sta 334+14.34
N 2,096,750.24
E 6,261,192.42
Elev = 496.26

MEN-101 5.03 (NOT SHOWN ON PLAN)
Fnd Brass Cap in Conc.
70.75 Ft Lt "G1" LINE
Sta 326+67.34
N 2,096,257.25
E 6,261,722.42
Elev = 470.33

NOTE: CONTROL MONUMENTATION UNSTABLE AND SUBJECT TO MOVEMENT.

PRELIMINARY INVESTIGATION SECTION

SCALE 1"=20′	VERT.DATUM NAVD 88	PHOTOGRAMMETRY AS OF: X			
	HORZ.DATUM NAD83 (2004.69)	SURVEYED	BY DISTRICT	CHECKED	BY C. FASSETT 3/2015
	ALIGNMENT TIES Dist TRAVERSE SHEET	DRAFTED	BY L. YOUNG 2/2015	CHECKED	BY L. LEW 3/2015

DESIGN	BY Keith Stillmunkes	CHECKED Eric Chaffee
DETAILS	BY Jie Tang	CHECKED Eric Chaffee
QUANTITIES	BY Greg Thornton	CHECKED Rakesh Deo

STATE OF CALIFORNIA
DEPARTMENT OF TRANSPORTATION

DIVISION OF ENGINEERING SERVICES
STRUCTURE DESIGN
DESIGN BRANCH 1

BRIDGE NO. 10E0036
POST MILE 5.16

PEREGRINE SLIDE RETAINING WALL
FOUNDATION PLAN

STRUCTURES FOUNDATION PLAN SHEET (ENGLISH) (REV. 09-01-10)

ORIGINAL SCALE IN INCHES FOR REDUCED PLANS 0 1 2 3

UNIT: 3646
PROJECT NUMBER & PHASE: 01120001331
CONTRACT NO.: 01-0B5004

SUBMITTAL DATE	REVISION DATES				SHEET	OF
3/5/2015	05/04/15	07/28/15	09/04/15		6	23

FILE => peregrine-e-fp.dgn

USERNAME => s119538 DATE PLOTTED => 18-APR-2016 TIME PLOTTED => 11:15

DIST	COUNTY	ROUTE	POST MILES TOTAL PROJECT	SHEET No.	TOTAL SHEETS
01	Men	101	3.8, 5.3	83	99

REGISTERED CIVIL ENGINEER 12-15-15 DATE

3-28-16
PLANS APPROVAL DATE

REGISTERED PROFESSIONAL ENGINEER Keith Stillmunkes No. 68878 Exp. 9-30-17 CIVIL STATE OF CALIFORNIA

The State of California or its officers or agents shall not be responsible for the accuracy or completeness of electronic copies of this plan sheet.

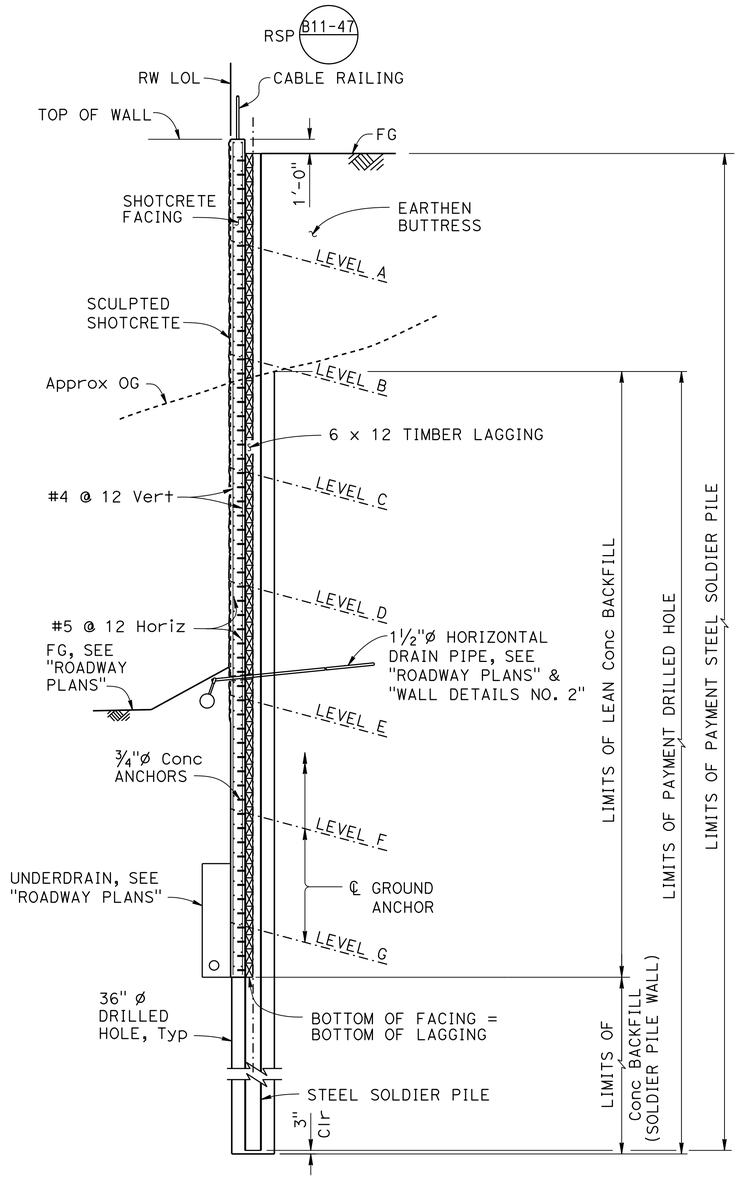

TYPICAL SECTION

3/16" = 1'-0"

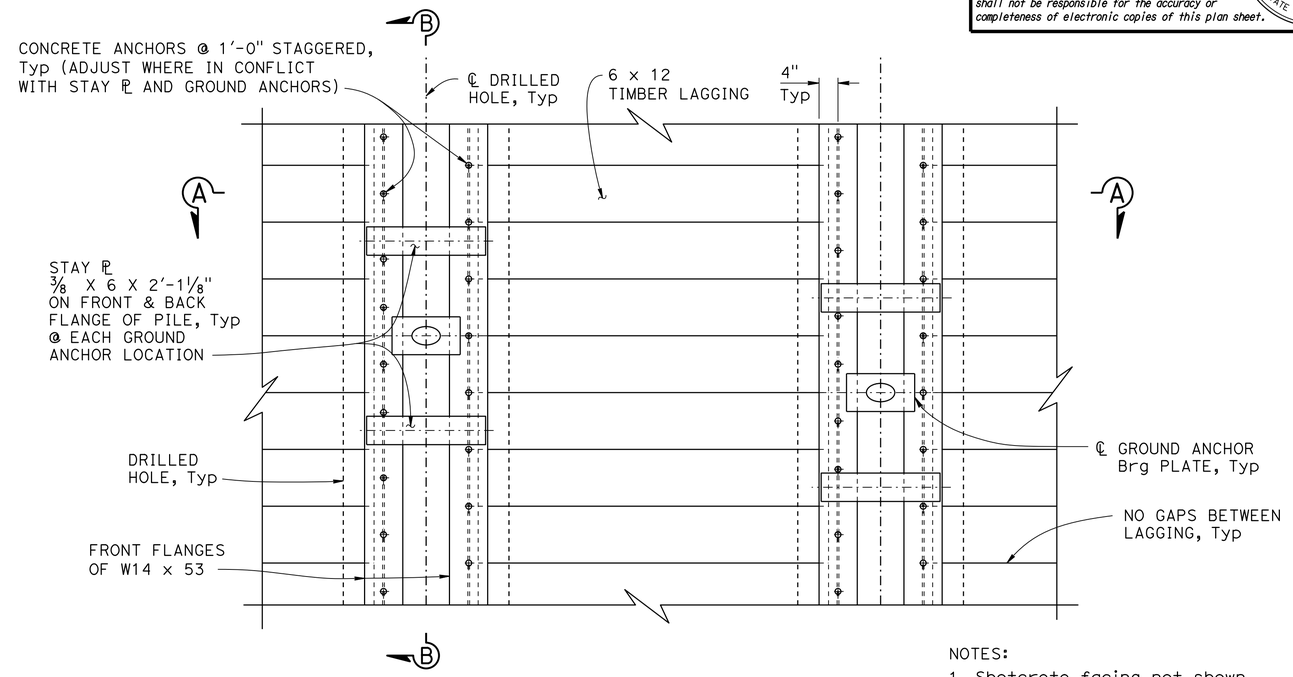

PART FRONT ELEVATION

¾" = 1'-0"

NOTES:

1. Shotcrete facing not shown.
2. For "SECTION B-B", see "WALL DETAILS NO. 1" sheet.
3. For geocomposite drain details, see "WALL DETAILS NO. 1" sheet.

LIMITS OF CLEAN & PAINT STEEL SOLDIER PILE

NO SCALE

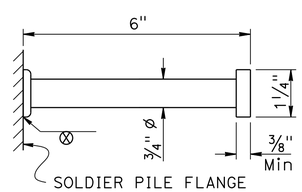

CONCRETE ANCHOR DETAIL

6" = 1'-0"

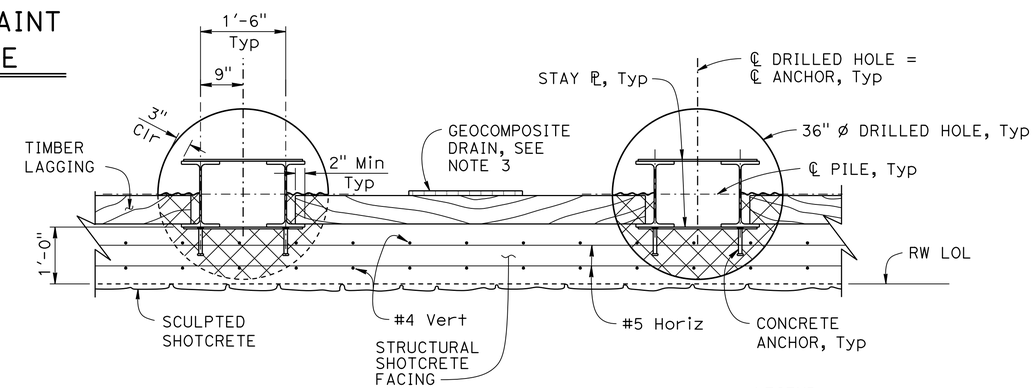

SECTION A-A

¾" = 1'-0"

LEGEND:

Indicates Lean Concrete Removal Limits

DESIGN	BY Keith Stillmunkes	CHECKED Eric Chaffee	
DETAILS	BY Jie Tang	CHECKED Eric Chaffee	
QUANTITIES	BY Greg Thornton	CHECKED Rakesh Deo	

STATE OF CALIFORNIA DEPARTMENT OF TRANSPORTATION

DIVISION OF ENGINEERING SERVICES STRUCTURE DESIGN DESIGN BRANCH 1

BRIDGE NO. 10E0036 POST MILE 5.16

PEREGRINE SLIDE RETAINING WALL
TYPICAL SECTION

STRUCTURES DESIGN DETAIL SHEET (ENGLISH) (REV. 09-01-10)

ORIGINAL SCALE IN INCHES FOR REDUCED PLANS 0 1 2 3

UNIT: 3576
PROJECT NUMBER & PHASE: 01120001331 CONTRACT NO.: 01-0B5004

DISREGARD PRINTS BEARING EARLIER REVISION DATES → 05/05/15 11/30/15 12/08/15

SHEET 7 OF 23

FILE => peregrine-f-ts.dgn

USERNAME => s119538 DATE PLOTTED => 18-APR-2016 TIME PLOTTED => 11:15

DIST	COUNTY	ROUTE	POST MILES TOTAL PROJECT	SHEET No.	TOTAL SHEETS
01	Men	101	3.8, 5.3	84	99

REGISTERED CIVIL ENGINEER 12-15-15 DATE

3-28-16
PLANS APPROVAL DATE

REGISTERED PROFESSIONAL ENGINEER Keith Stillmunkes No. 68878 Exp. 9-30-17 CIVIL STATE OF CALIFORNIA

The State of California or its officers or agents shall not be responsible for the accuracy or completeness of electronic copies of this plan sheet.

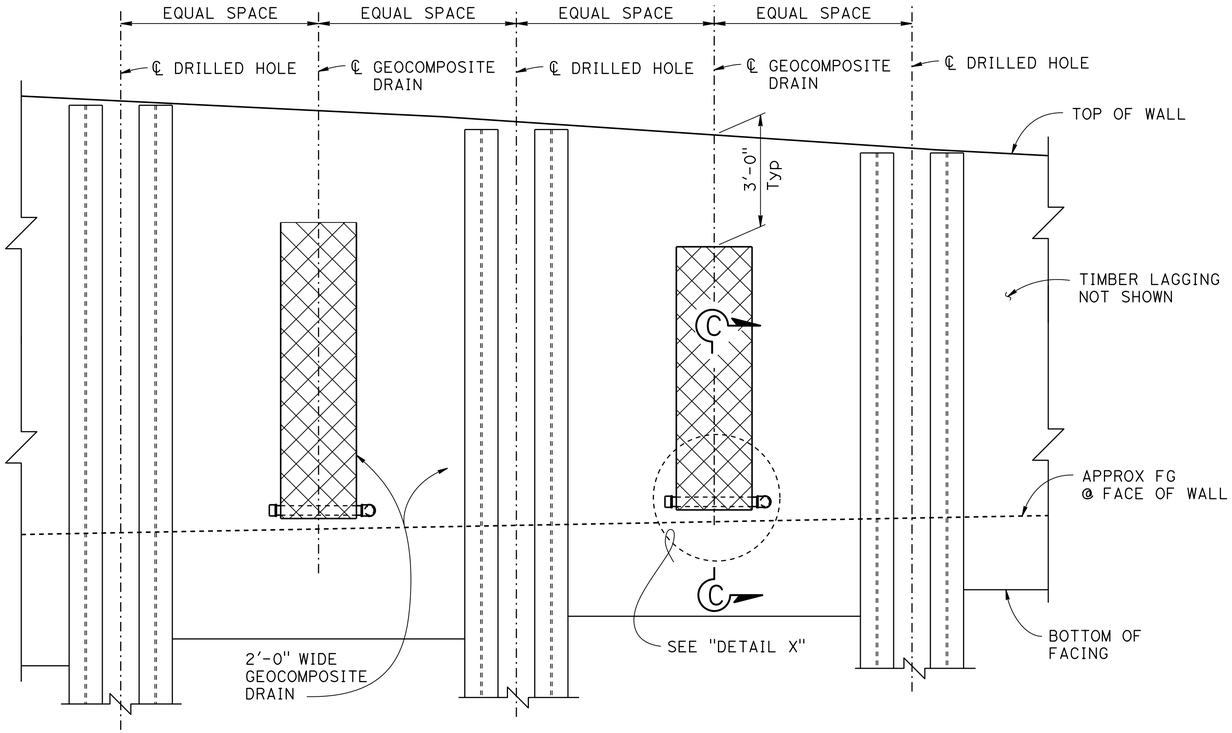

PART REAR ELEVATION - GEOCOMPOSITE DRAIN

NO SCALE

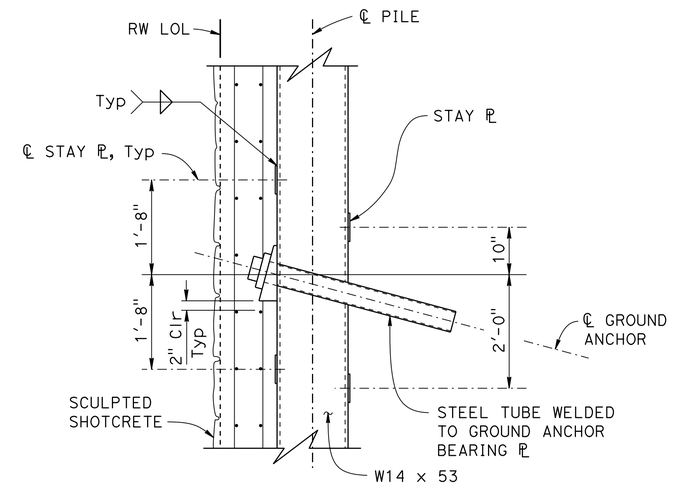

NOTE: For location of "SECTION B-B", see "TYPICAL SECTION" sheet.

SECTION B-B

3/4" = 1'-0"

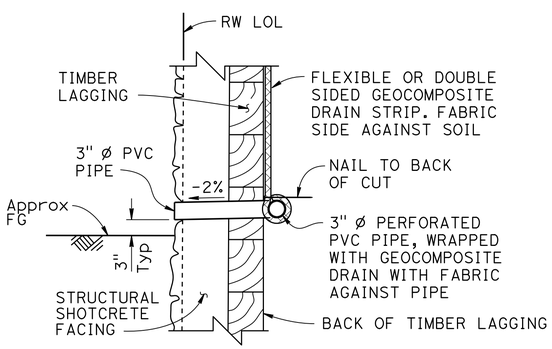

SECTION C-C

NO SCALE

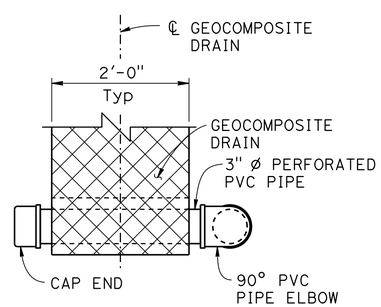

DETAIL X

NO SCALE

DESIGN	BY Keith Stillmunkes	CHECKED Eric Chaffee	
DETAILS	BY Jie Tang	CHECKED Eric Chaffee	
QUANTITIES	BY Greg Thornton	CHECKED Rakesh Deo	

STATE OF CALIFORNIA
DEPARTMENT OF TRANSPORTATION

DIVISION OF ENGINEERING SERVICES
STRUCTURE DESIGN
DESIGN BRANCH 1

BRIDGE NO. 10E0036
POST MILE 5.16

PEREGRINE SLIDE RETAINING WALL
WALL DETAILS NO. 1

STRUCTURES DESIGN DETAIL SHEET (ENGLISH) (REV. 09-01-10)

ORIGINAL SCALE IN INCHES FOR REDUCED PLANS 0 1 2 3

UNIT: 3576
PROJECT NUMBER & PHASE: 01120001331
CONTRACT NO.: 01-0B5004

DISREGARD PRINTS BEARING EARLIER REVISION DATES

REVISION DATES 05/05/15 09/04/15 10/19/15 10/27/15

SHEET 8 OF 23

FILE => peregrine-g-walldet01.dgn

USERNAME => s119538 DATE PLOTTED => 18-APR-2016 TIME PLOTTED => 11:15

DIST	COUNTY	ROUTE	POST MILES TOTAL PROJECT	SHEET No.	TOTAL SHEETS
01	Men	101	3.8, 5.3	85	99

REGISTERED CIVIL ENGINEER 12-15-15 DATE

3-28-16
PLANS APPROVAL DATE

REGISTERED PROFESSIONAL ENGINEER Keith Stillmunkes No. 68878 Exp. 9-30-17 CIVIL STATE OF CALIFORNIA

The State of California or its officers or agents shall not be responsible for the accuracy or completeness of electronic copies of this plan sheet.

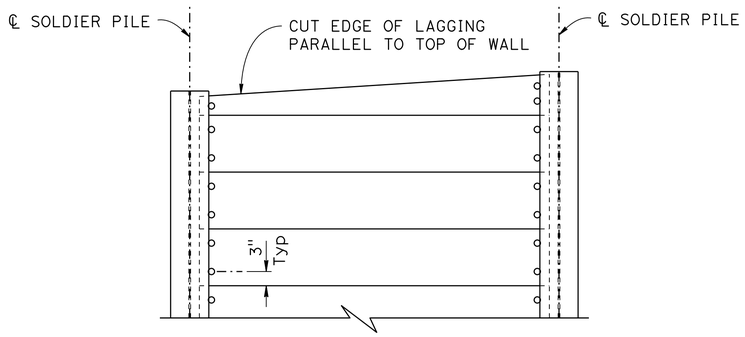

PART ELEVATION

LAGGING DETAILS (ALTERNATIVE 1)

¾" = 1'-0"

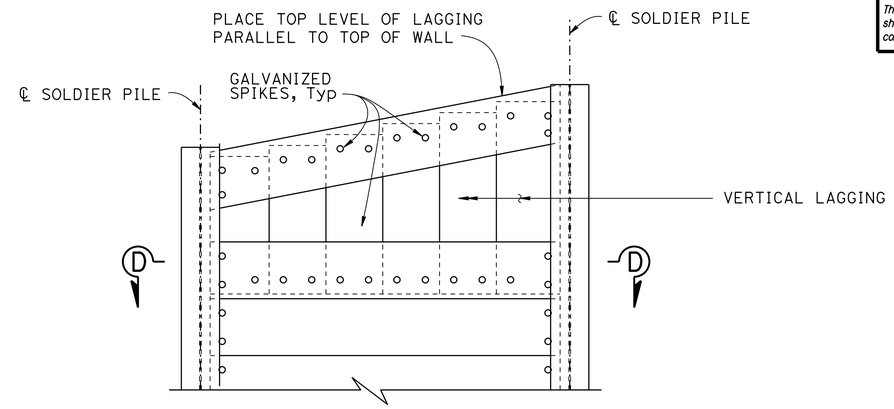

PART ELEVATION

LAGGING DETAILS (ALTERNATIVE 2)

¾" = 1'-0"

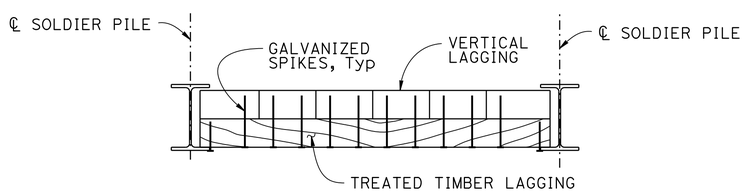

SECTION D-D

¾" = 1'-0"

NOTES:

1. No clipping of timber lagging corners allowed.
2. Use 40d Galv wire spikes.
3. Spikes shall not be bent.
4. Place horizontal drain midway between piles, after every odd-numbered pile from pile 11 to pile 50.
5. For additional details, see "ROADWAY PLANS".

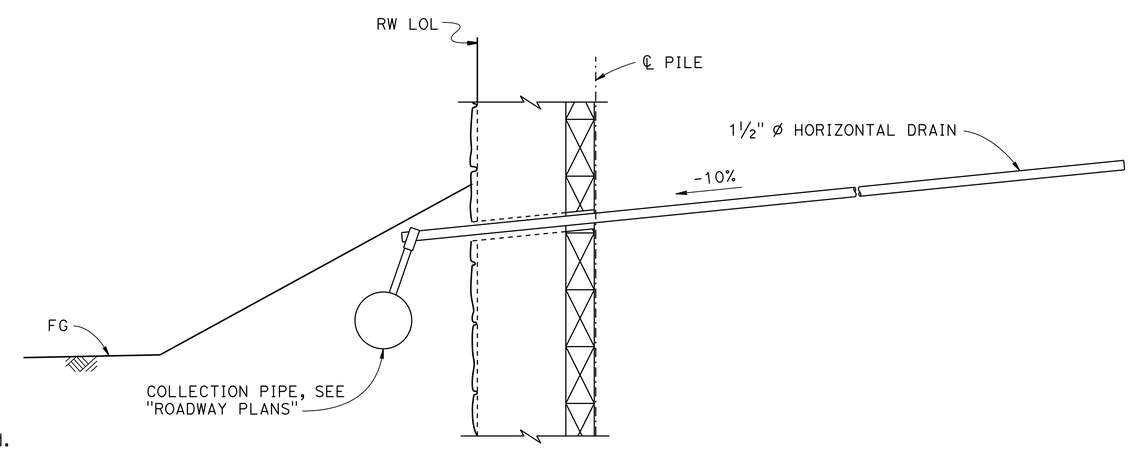

HORIZONTAL DRAIN DETAILS

¾" = 1'-0"

DESIGN	BY Keith Stillmunkes	CHECKED Eric Chaffee
DETAILS	BY Jie Tang	CHECKED Eric Chaffee
QUANTITIES	BY Greg Thornton	CHECKED Rakesh Deo

STATE OF CALIFORNIA
DEPARTMENT OF TRANSPORTATION

DIVISION OF ENGINEERING SERVICES
STRUCTURE DESIGN
DESIGN BRANCH 1

BRIDGE NO. 10E0036
POST MILE 5.16

PEREGRINE SLIDE RETAINING WALL
WALL DETAILS NO. 2

STRUCTURES DESIGN DETAIL SHEET (ENGLISH) (REV. 09-01-10)

ORIGINAL SCALE IN INCHES FOR REDUCED PLANS 0 1 2 3

UNIT: 3576
PROJECT NUMBER & PHASE: 01120001331
CONTRACT NO.: 01-0B5004

DISREGARD PRINTS BEARING EARLIER REVISION DATES

REVISION DATES 05/06/15 11/30/15 10/19/15

SHEET 9 OF 23

FILE => peregrine-g-walldet02.dgn

USERNAME => s119538 DATE PLOTTED => 18-APR-2016 TIME PLOTTED => 11:15

DIST	COUNTY	ROUTE	POST MILES TOTAL PROJECT	SHEET No.	TOTAL SHEETS
01	Men	101	3.8, 5.3	86	99

REGISTERED CIVIL ENGINEER 12-15-15 DATE

3-28-16
PLANS APPROVAL DATE

REGISTERED PROFESSIONAL ENGINEER Keith Stillmunkes No. 68878 Exp. 9-30-17 CIVIL STATE OF CALIFORNIA

The State of California or its officers or agents shall not be responsible for the accuracy or completeness of electronic copies of this plan sheet.

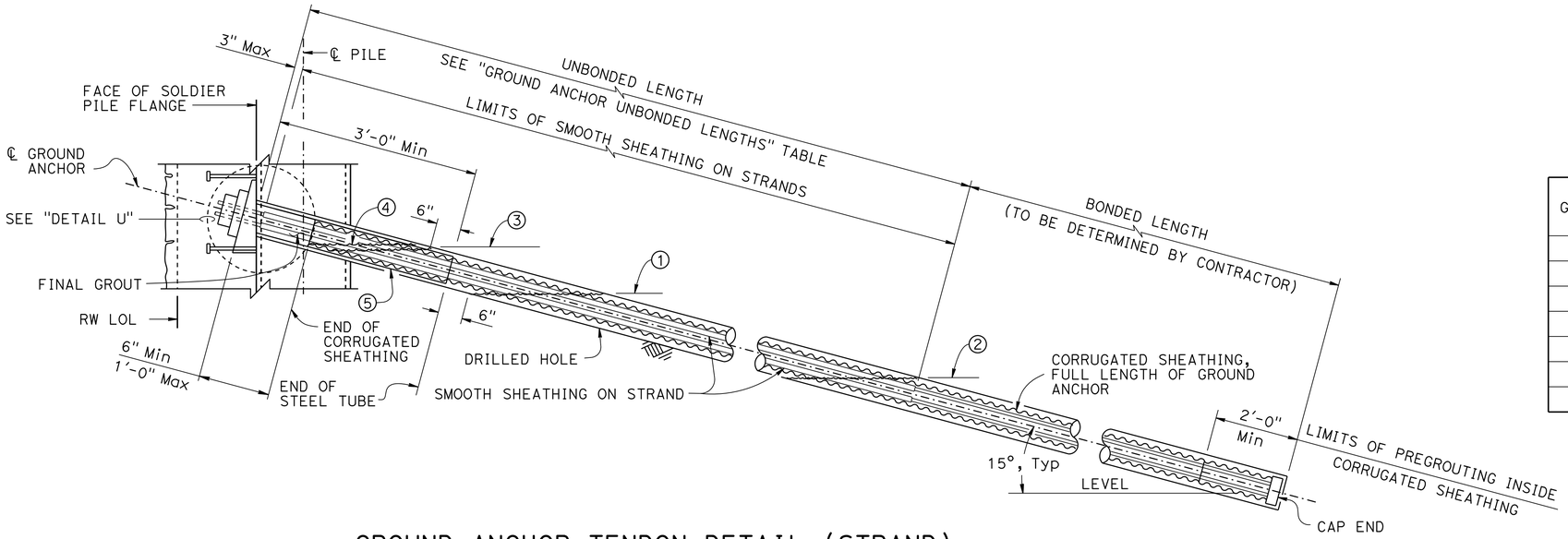

GROUND ANCHOR TENDON DETAIL (STRAND)

NO SCALE

GROUND ANCHOR UNBONDED LENGTHS

GROUND ANCHOR LEVEL	UNBONDED LENGTH FOR ODD NUMBERED PILES (feet)	UNBONDED LENGTH FOR EVEN NUMBERED PILES (feet)
LEVEL A	160	190
LEVEL B	170	140
LEVEL C	120	150
LEVEL D	130	100
LEVEL E	80	110
LEVEL F	90	60
LEVEL G	40	70

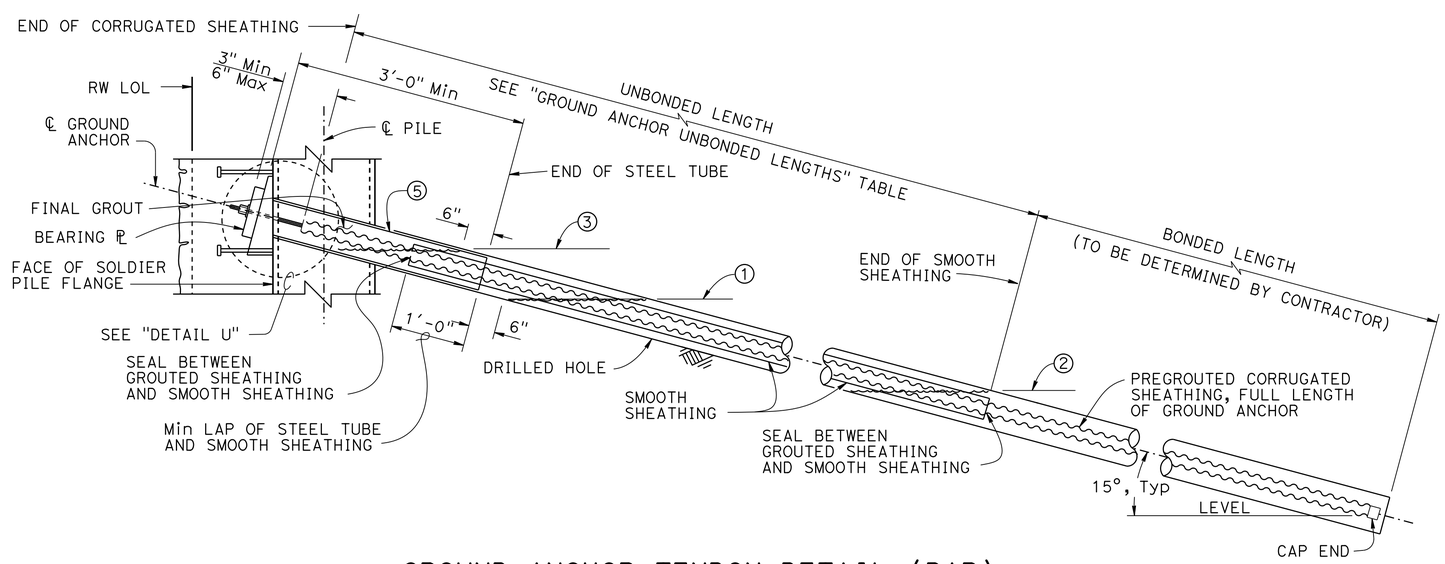

GROUND ANCHOR TENDON DETAIL (BAR)

NO SCALE

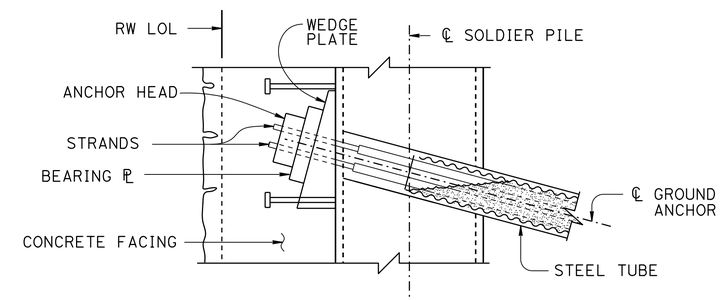

NOTE: Strand option shown, bar option similar.

DETAIL U

1½" = 1'-0"

LEGEND:

1. Level of initial grouting for drilled hole 6" ø or smaller
2. Level of initial grouting for drilled hole greater than 6" ø
3. Level of secondary grouting
4. Level of initial grouting inside corrugated sheathing
5. Steel tube (Min thickness = ¼") welded to bearing plate Galvanize assembly after fabrication. Inside diameter of steel tube shall be at least 1" greater than the outer diameter of corrugated sheathing. Fill tube with grout.

	BY	CHECKED
DESIGN	Keith Stillmunkes	Eric Chaffee
DETAILS	Jie Tang	Eric Chaffee
QUANTITIES	Greg Thornton	Rakesh Deo

STATE OF CALIFORNIA
DEPARTMENT OF TRANSPORTATION

DIVISION OF ENGINEERING SERVICES
STRUCTURE DESIGN
DESIGN BRANCH 1

BRIDGE NO. 10E0036
POST MILE 5.16

PEREGRINE SLIDE RETAINING WALL
GROUND ANCHOR DETAILS

STRUCTURES DESIGN DETAIL SHEET (ENGLISH) (REV. 09-01-10)

ORIGINAL SCALE IN INCHES FOR REDUCED PLANS 0 1 2 3

UNIT: 3576
PROJECT NUMBER & PHASE: 01120001331
CONTRACT NO.: 01-0B5004

DISREGARD PRINTS BEARING EARLIER REVISION DATES

REVISION DATES 05/06/15 08/11/15 08/28/15 09/04/15

SHEET 10 OF 23

FILE => peregrine-h-gadet.dgn

USERNAME => s119538 DATE PLOTTED => 18-APR-2016 TIME PLOTTED => 11:15

DIST	COUNTY	ROUTE	POST MILES TOTAL PROJECT	SHEET No.	TOTAL SHEETS
01	Men	101	3.8, 5.3	87	99

REGISTERED CIVIL ENGINEER 12-15-15 DATE

3-28-16
PLANS APPROVAL DATE

REGISTERED PROFESSIONAL ENGINEER Keith Stillmunkes No. 68878 Exp. 9-30-17 CIVIL STATE OF CALIFORNIA

The State of California or its officers or agents shall not be responsible for the accuracy or completeness of electronic copies of this plan sheet.

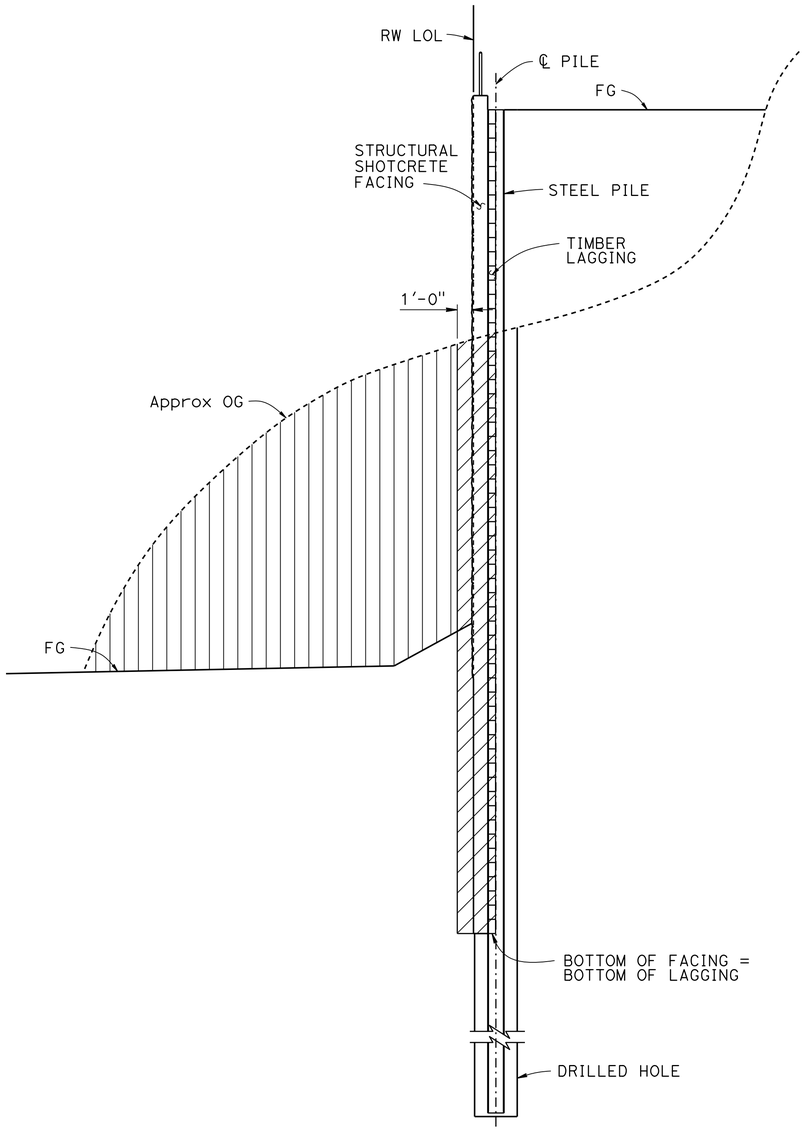

STRUCTURE EXCAVATION

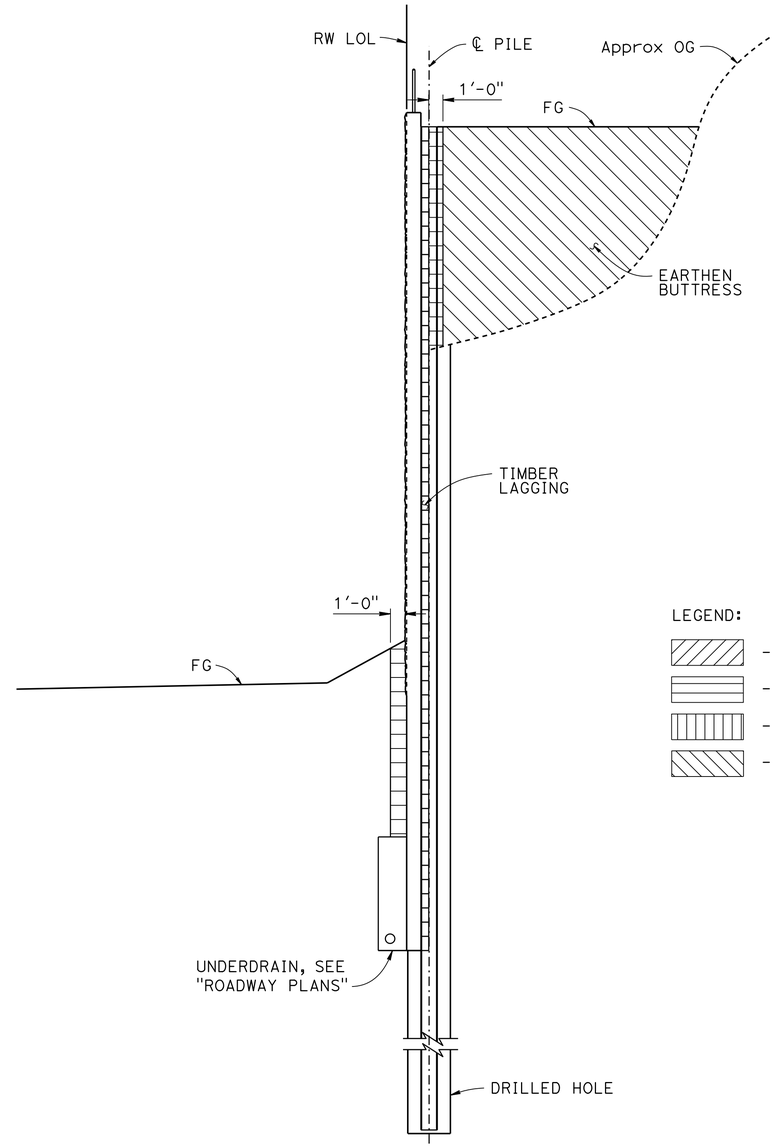

STRUCTURE BACKFILL

LEGEND:

- Indicates Structure Excavation (Soldier Pile Wall)
- Indicates Structure Backfill (Soldier Pile Wall)
- Indicates Roadway Excavation, see "ROADWAY PLANS"
- Indicates Roadway Embankment, see "ROADWAY PLANS"

TYPICAL PAY LIMITS

3/16" = 1'-0"

	BY	CHECKED
DESIGN	Keith Stillmunkes	Eric Chaffee
DETAILS	Jie Tang	Eric Chaffee
QUANTITIES	Greg Thornton	Rakesh Deo

STATE OF CALIFORNIA
DEPARTMENT OF TRANSPORTATION

DIVISION OF ENGINEERING SERVICES
STRUCTURE DESIGN
DESIGN BRANCH 1

BRIDGE NO. 10E0036
POST MILE 5.16

PEREGRINE SLIDE RETAINING WALL
EXCAVATION AND BACKFILL LIMITS

STRUCTURES DESIGN DETAIL SHEET (ENGLISH) (REV. 09-01-10)

ORIGINAL SCALE IN INCHES FOR REDUCED PLANS 0 1 2 3

UNIT: 3576
PROJECT NUMBER & PHASE: 01120001331
CONTRACT NO.: 01-0B5004

DISREGARD PRINTS BEARING EARLIER REVISION DATES

REVISION DATES 05/15/15 10/29/15 12/08/15

SHEET 11 OF 23

FILE => peregrine-o-eblimits.dgn

USERNAME => s119538 DATE PLOTTED => 18-APR-2016 TIME PLOTTED => 11:15

DIST	COUNTY	ROUTE	POST MILES TOTAL PROJECT	SHEET No.	TOTAL SHEETS
01	Men	101	3.8, 5.3	88	99

REGISTERED CIVIL ENGINEER 12-15-15 DATE

3-28-16
PLANS APPROVAL DATE

REGISTERED PROFESSIONAL ENGINEER Keith Stillmunkes No. 68878 Exp. 9-30-17 CIVIL STATE OF CALIFORNIA

The State of California or its officers or agents shall not be responsible for the accuracy or completeness of electronic copies of this plan sheet.

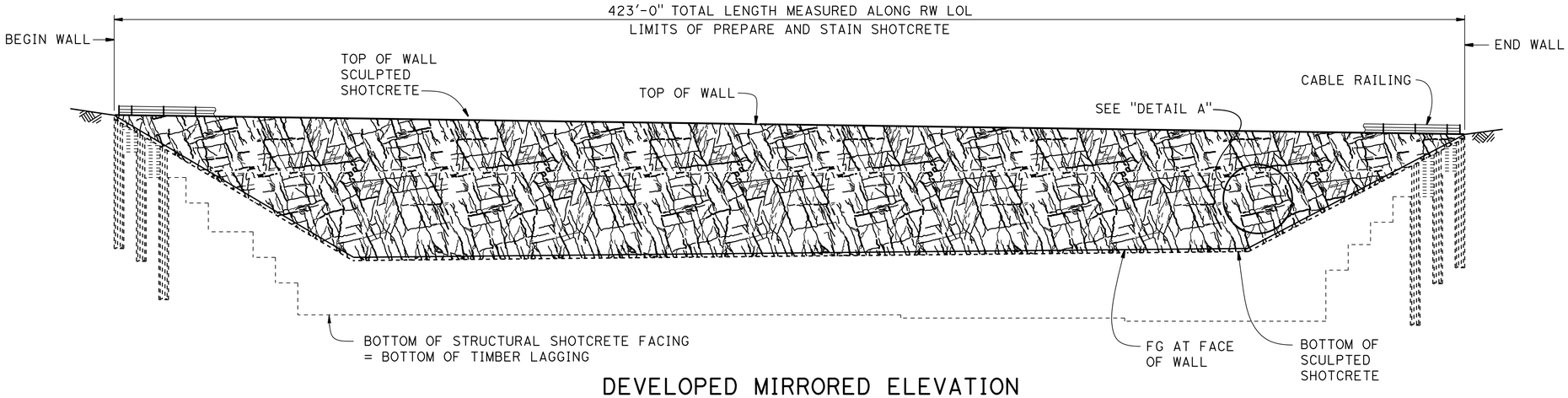

DEVELOPED MIRRORED ELEVATION

1" = 20'

NOTE:

Primary strata shall be placed at 60 to 80 degrees from the horizontal. Secondary strata shall be placed at 10 to 20 degrees from the horizontal. Cracks and folds shall be placed to mimic natural rock texture.

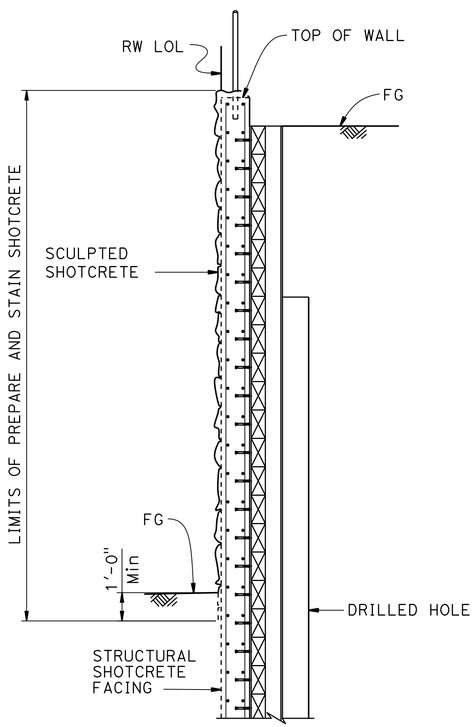

TYPICAL SECTION

3/8" = 1'-0"

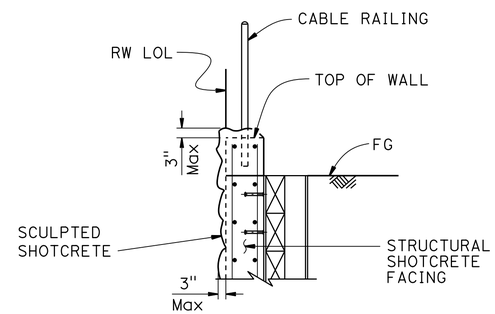

SECTION AT TOP OF WALL

1/2" = 1'-0"

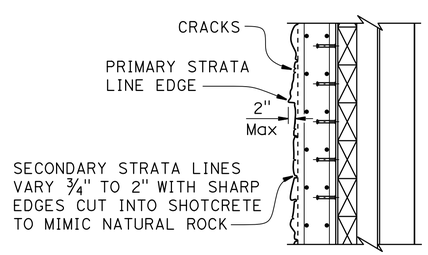

SECTION B-B

1/2" = 1'-0"

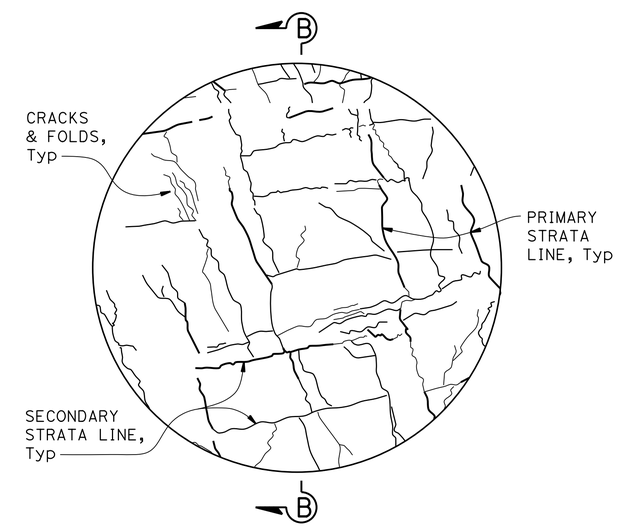

DETAIL A

1/4" = 1'-0"

	BY	CHECKED
DESIGN	Keith Stillmunkes	Eric Chaffee
DETAILS	Bob Huddleston	Eric Chaffee
QUANTITIES	Greg Thornton	Rakesh Deo

STATE OF CALIFORNIA
DEPARTMENT OF TRANSPORTATION

DIVISION OF ENGINEERING SERVICES
STRUCTURE DESIGN
DESIGN BRANCH 1

BRIDGE NO. 10E0036
POST MILE 5.16

PEREGRINE SLIDE RETAINING WALL
ARCHITECTURAL TREATMENT

STRUCTURES DESIGN DETAIL SHEET (ENGLISH) (REV. 09-01-10)

ORIGINAL SCALE IN INCHES FOR REDUCED PLANS 0 1 2 3

UNIT: 3576
PROJECT NUMBER & PHASE: 01120001331
CONTRACT NO.: 01-0B5004

DISREGARD PRINTS BEARING EARLIER REVISION DATES

REVISION DATES 09-02-15 12/15/15 10/27/15

SHEET 12 OF 23

FILE => peregrine-u-at.dgn

USERNAME => s119538 DATE PLOTTED => 18-APR-2016 TIME PLOTTED => 11:15

DIST	COUNTY	ROUTE	POST MILES TOTAL PROJECT	SHEET No.	TOTAL SHEETS
01	Men	101	3.8, 5.3	89	99

REGISTERED CIVIL ENGINEER 12-15-15 DATE

3-28-16
PLANS APPROVAL DATE

REGISTERED PROFESSIONAL ENGINEER Keith Stillmunkes No. 68878 Exp. 9-30-17 CIVIL STATE OF CALIFORNIA

The State of California or its officers or agents shall not be responsible for the accuracy or completeness of electronic copies of this plan sheet.

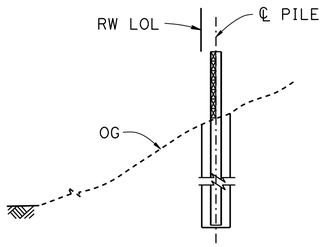

STAGE 1:

1. Drill and place soldier piles.
2. Install lagging and drainage material from OG to top of piles.

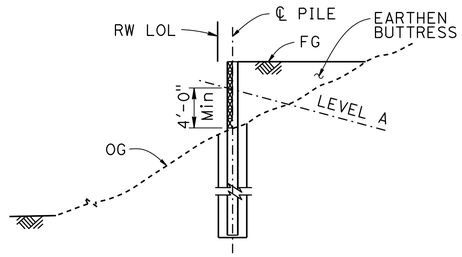

STAGE 2:

1. Backfill earthen buttress behind wall up to Finished Grade.
2. Install, stress and lock off level A ground anchors.

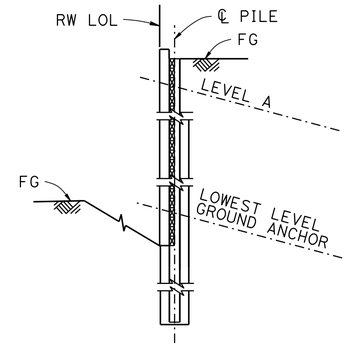

STAGE 3:

1. Continue top-down construction for the portion of the wall below OG.
2. Construct structural shotcrete facing.

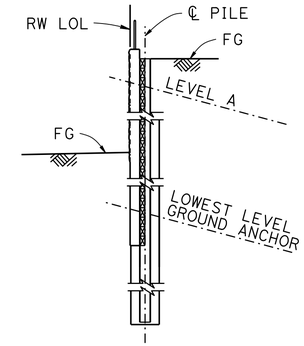

STAGE 4:

1. Construct sculpted shotcrete facing.
2. Backfill in front of wall up to FG.
3. Install cable railing.

CONSTRUCTION SEQUENCE FOR PILES 1 - 11 AND 52 - 61

1/8" = 1'-0"

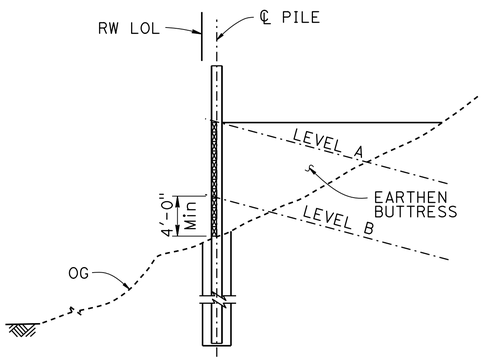

STAGE 1:

1. Drill and place soldier piles.
2. Install lagging and drainage material from OG to elevation of level A ground anchors.
3. Backfill earthen buttress behind wall up to elevation of level A ground anchors.
4. Install, stress and lock off level B ground anchors.

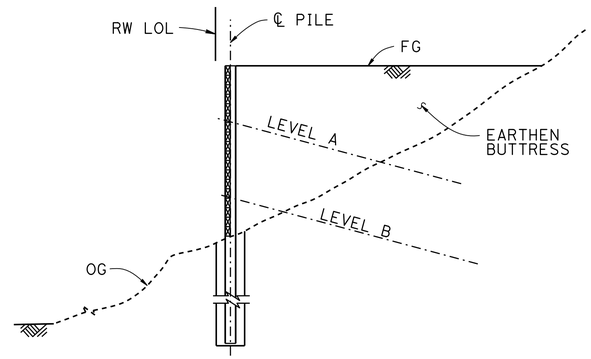

STAGE 2:

1. Install lagging and drainage material up to top of piles.
2. Backfill earthen buttress behind wall up to Finished Grade.
3. Install, stress and lock off level A ground anchors.

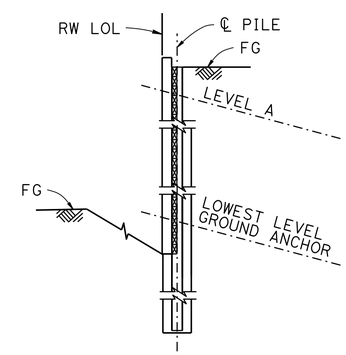

STAGE 3:

1. Continue top-down construction for the portion of the wall below OG.
2. Construct structural shotcrete facing.

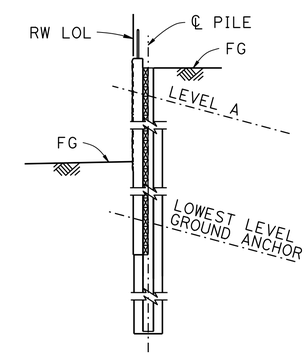

STAGE 4:

1. Construct sculpted shotcrete facing.
2. Backfill in front of wall up to FG.
3. Install cable railing.

CONSTRUCTION SEQUENCE FOR PILES 12 - 51

1/8" = 1'-0"

DESIGN	BY Keith Stillmunkes	CHECKED Eric Chaffee	
DETAILS	BY Jie Tang	CHECKED Eric Chaffee	
QUANTITIES	BY Greg Thornton	CHECKED Rakesh Deo	

STATE OF CALIFORNIA
DEPARTMENT OF TRANSPORTATION

DIVISION OF ENGINEERING SERVICES
STRUCTURE DESIGN
DESIGN BRANCH 1

BRIDGE NO. 10E0036
POST MILE 5.16

PEREGRINE SLIDE RETAINING WALL
CONSTRUCTION SEQUENCE

STRUCTURES DESIGN DETAIL SHEET (ENGLISH) (REV. 09-01-10)

ORIGINAL SCALE IN INCHES FOR REDUCED PLANS 0 1 2 3

UNIT: 3576
PROJECT NUMBER & PHASE: 01120001331
CONTRACT NO.: 01-0B5004

DISREGARD PRINTS BEARING EARLIER REVISION DATES

REVISION DATES 10/28/15

SHEET 13 OF 23

FILE => peregrine-v-cs.dgn

USERNAME => s119538 DATE PLOTTED => 18-APR-2016 TIME PLOTTED => 11:15

DIST	COUNTY	ROUTE	POST MILES TOTAL PROJECT	SHEET No.	TOTAL SHEETS
01	Men	101	3.8, 5.3	90	99

Ronald L. Richman 8-18-15
REGISTERED CIVIL ENGINEER DATE

3-28-16
PLANS APPROVAL DATE

REGISTERED PROFESSIONAL ENGINEER Ronald L. Richman No. C039869 Exp. 12-31-15 CIVIL STATE OF CALIFORNIA

The State of California or its officers or agents shall not be responsible for the accuracy or completeness of electronic copies of this plan sheet.

This LOTB sheet was prepared in accordance with the Caltrans Soil & Rock Logging, Classification, & Presentation Manual (2010 Edition).

See 2010 Standard Plans A10F and A10G for Soil Legend, and A10H for Rock Legend.

BENCH MARK

BM HPGN D CA 01 C8 Elev 564
GPS Survey Station on State Hwy 175, about 8 miles Southwest of Lakeport and about 2.4 miles East of Hopland.
NAVD 88

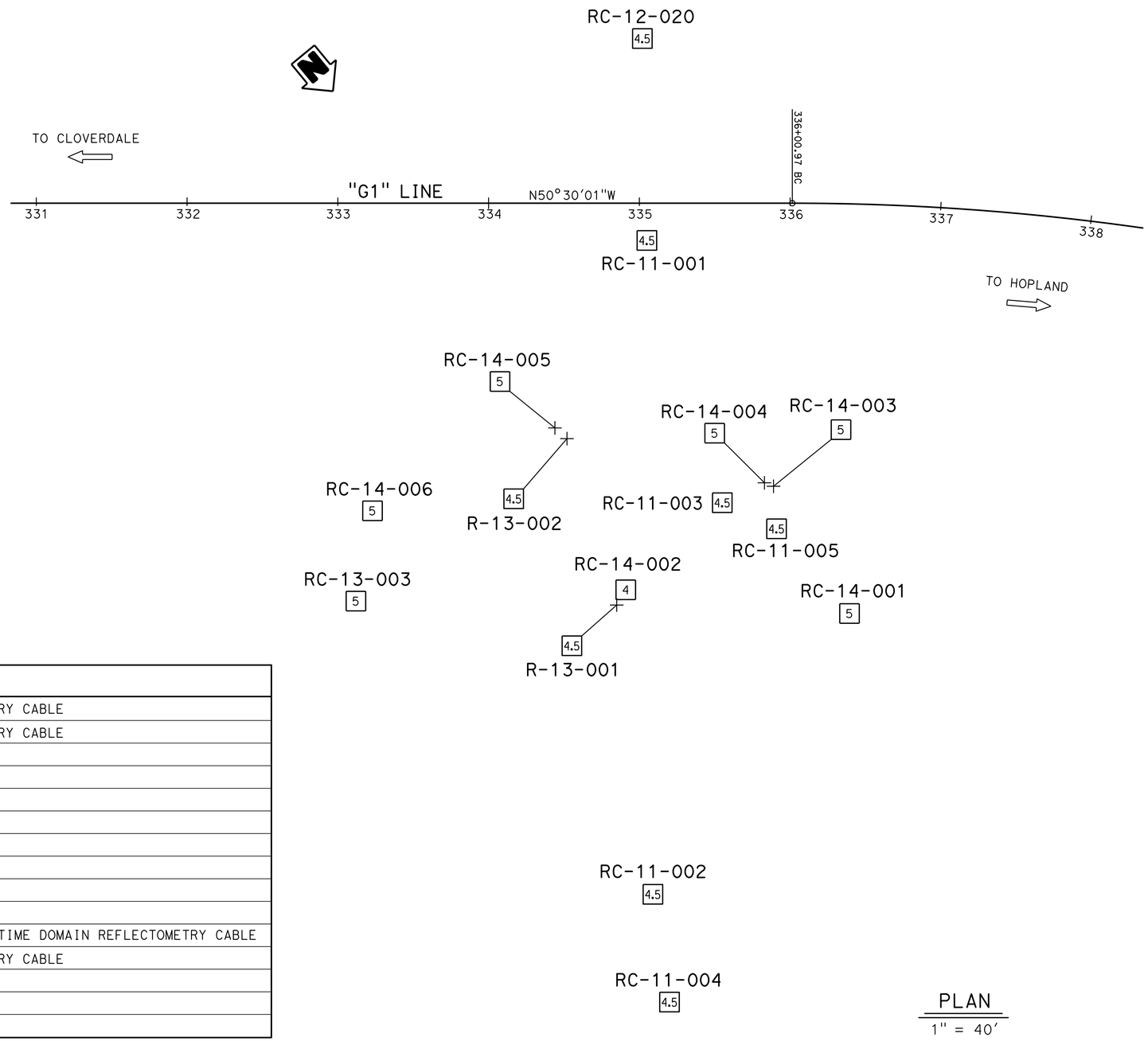

PLAN
1" = 40'

BOREHOLE	COMPLETED AS
R-13-001	TIME DOMAIN REFLECTOMETRY CABLE
R-13-002	TIME DOMAIN REFLECTOMETRY CABLE
RC-13-003	PIEZOMETER
RC-14-001	SLOPE INCLINOMETER
RC-14-002	PIEZOMETER
RC-14-003	SLOPE INCLINOMETER
RC-14-004	PIEZOMETER
RC-14-005	PIEZOMETER
RC-14-006	SLOPE INCLINOMETER
RC-11-001	SLOPE INCLINOMETER
RC-11-002	SLOPE INCLINOMETER AND TIME DOMAIN REFLECTOMETRY CABLE
RC-11-003	TIME DOMAIN REFLECTOMETRY CABLE
RC-11-004	PIEZOMETER
RC-11-005	SLOPE INCLINOMETER
RC-12-020	SLOPE INCLINOMETER

ENGINEERING SERVICES
FUNCTIONAL SUPERVISOR
NAME: C. Narwold

MATERIALS AND GEOTECHNICAL SERVICES
DRAWN BY: I. G-Remmen
CHECKED BY: R. Newman
FIELD INVESTIGATION BY:
R. Richman, K. Gallagher

STATE OF CALIFORNIA
DEPARTMENT OF TRANSPORTATION

DIVISION OF ENGINEERING SERVICES
STRUCTURE DESIGN
DESIGN BRANCH 1

BRIDGE NO. 10E0036
POST MILE 5.16

PEREGRINE SLIDE RETAINING WALL
LOG OF TEST BORINGS 1 OF 10

OGS CIVIL LOG OF TEST BORINGS SHEET

ORIGINAL SCALE IN INCHES FOR REDUCED PLANS 0 1 2 3

UNIT: 3650
PROJECT NUMBER & PHASE: 01120001331
CONTRACT NO.: 01-0B5004

DISREGARD PRINTS BEARING EARLIER REVISION DATES

REVISION DATES: ~~05-29-15~~ 09/04/15 10/19/15

SHEET 14 OF 23

FILE => peregrine-z-lt01.dgn

USERNAME => s119538 DATE PLOTTED => 18-APR-2016 TIME PLOTTED => 11:15

DIST	COUNTY	ROUTE	POST MILES TOTAL PROJECT	SHEET No.	TOTAL SHEETS
01	Men	101	3.8, 5.3	91	99

Ronald L. Richman 8-18-15
REGISTERED CIVIL ENGINEER DATE

3-28-16
PLANS APPROVAL DATE

REGISTERED PROFESSIONAL ENGINEER Ronald L. Richman No. C039869 Exp. 12-31-15 CIVIL STATE OF CALIFORNIA

The State of California or its officers or agents shall not be responsible for the accuracy or completeness of electronic copies of this plan sheet.

This LOTB sheet was prepared in accordance with the Caltrans Soil & Rock Logging, Classification, & Presentation Manual (2010 Edition).

See 2010 Standard Plans A10F and A10G for Soil Legend, and A10H for Rock Legend.

FOR PLAN VIEW, SEE
"LOG OF TEST BORINGS 1 OF 10"

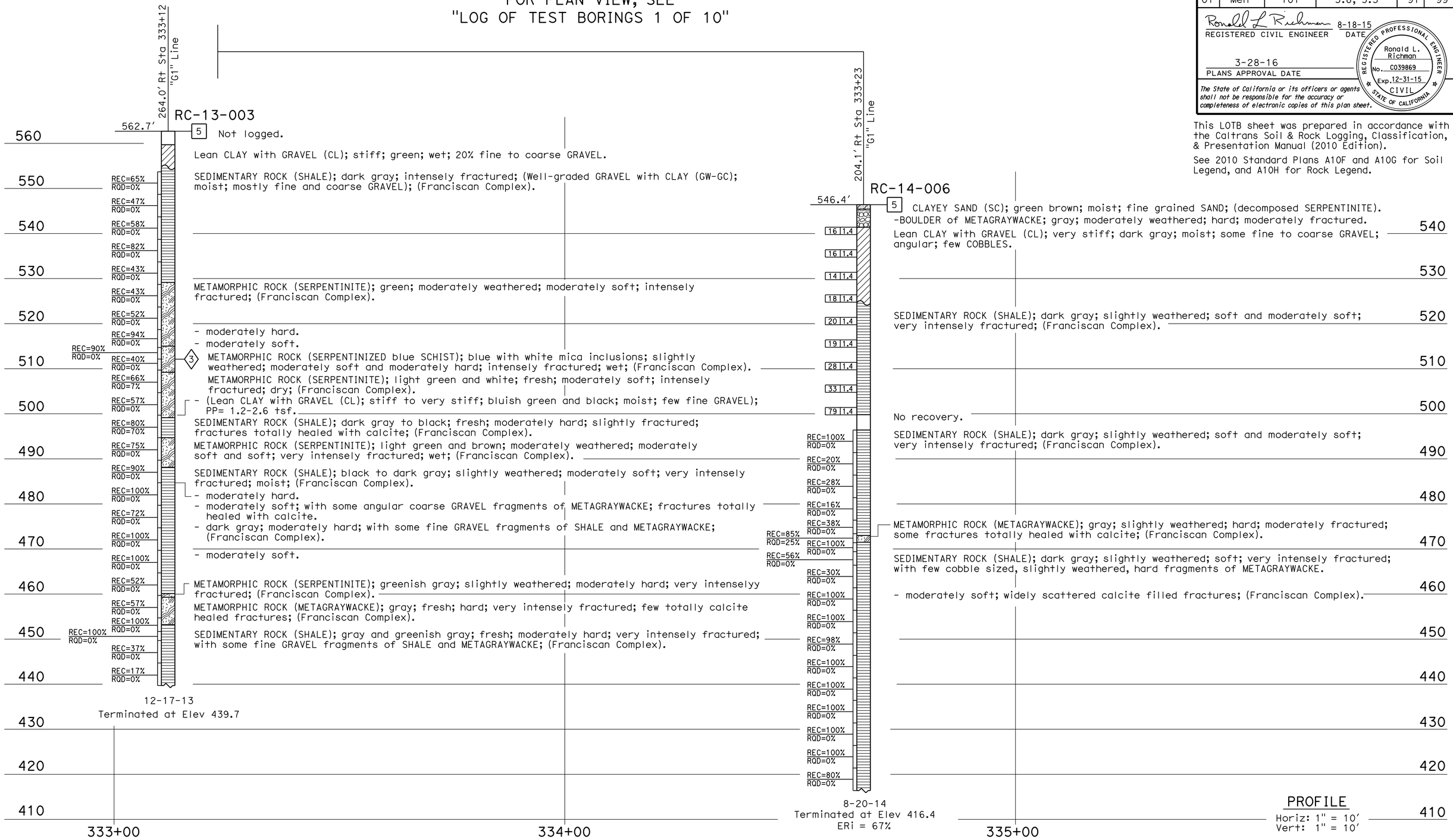

ENGINEERING SERVICES	MATERIALS AND GEOTECHNICAL SERVICES	STATE OF CALIFORNIA DEPARTMENT OF TRANSPORTATION	DIVISION OF ENGINEERING SERVICES STRUCTURE DESIGN DESIGN BRANCH 1	BRIDGE NO. 10E0036 POST MILE 5.16	PEREGRINE SLIDE RETAINING WALL LOG OF TEST BORINGS 2 OF 10
FUNCTIONAL SUPERVISOR NAME: C. Narwold	DRAWN BY: I. G-Remmen CHECKED BY: R. Newman	FIELD INVESTIGATION BY: R. Richman, C. Hoadley, C. Ewing (KLEINFELDER)			

OGS CIVIL LOG OF TEST BORINGS SHEET

ORIGINAL SCALE IN INCHES FOR REDUCED PLANS 0 1 2 3

UNIT: 3650
PROJECT NUMBER & PHASE: 01120001331 CONTRACT NO.: 01-0B5004

DISREGARD PRINTS BEARING EARLIER REVISION DATES

REVISION DATES 05-29-15 08/26/15 09/04/15 SHEET 15 OF 23

FILE => peregrine-z-lt02.dgn

USERNAME => s119538 DATE PLOTTED => 18-APR-2016 TIME PLOTTED => 11:15

DIST	COUNTY	ROUTE	POST MILES TOTAL PROJECT	SHEET No.	TOTAL SHEETS
01	Men	101	3.8, 5.3	92	99

Ronald L. Richman 8-18-15
REGISTERED CIVIL ENGINEER DATE

3-28-16
PLANS APPROVAL DATE

REGISTERED PROFESSIONAL ENGINEER Ronald L. Richman No. C039869 Exp. 12-31-15 CIVIL STATE OF CALIFORNIA

The State of California or its officers or agents shall not be responsible for the accuracy or completeness of electronic copies of this plan sheet.

This LOTB sheet was prepared in accordance with the Caltrans Soil & Rock Logging, Classification, & Presentation Manual (2010 Edition).

See 2010 Standard Plans A10F and A10G for Soil Legend, and A10H for Rock Legend.

FOR PLAN VIEW, SEE
"LOG OF TEST BORINGS 1 OF 10"

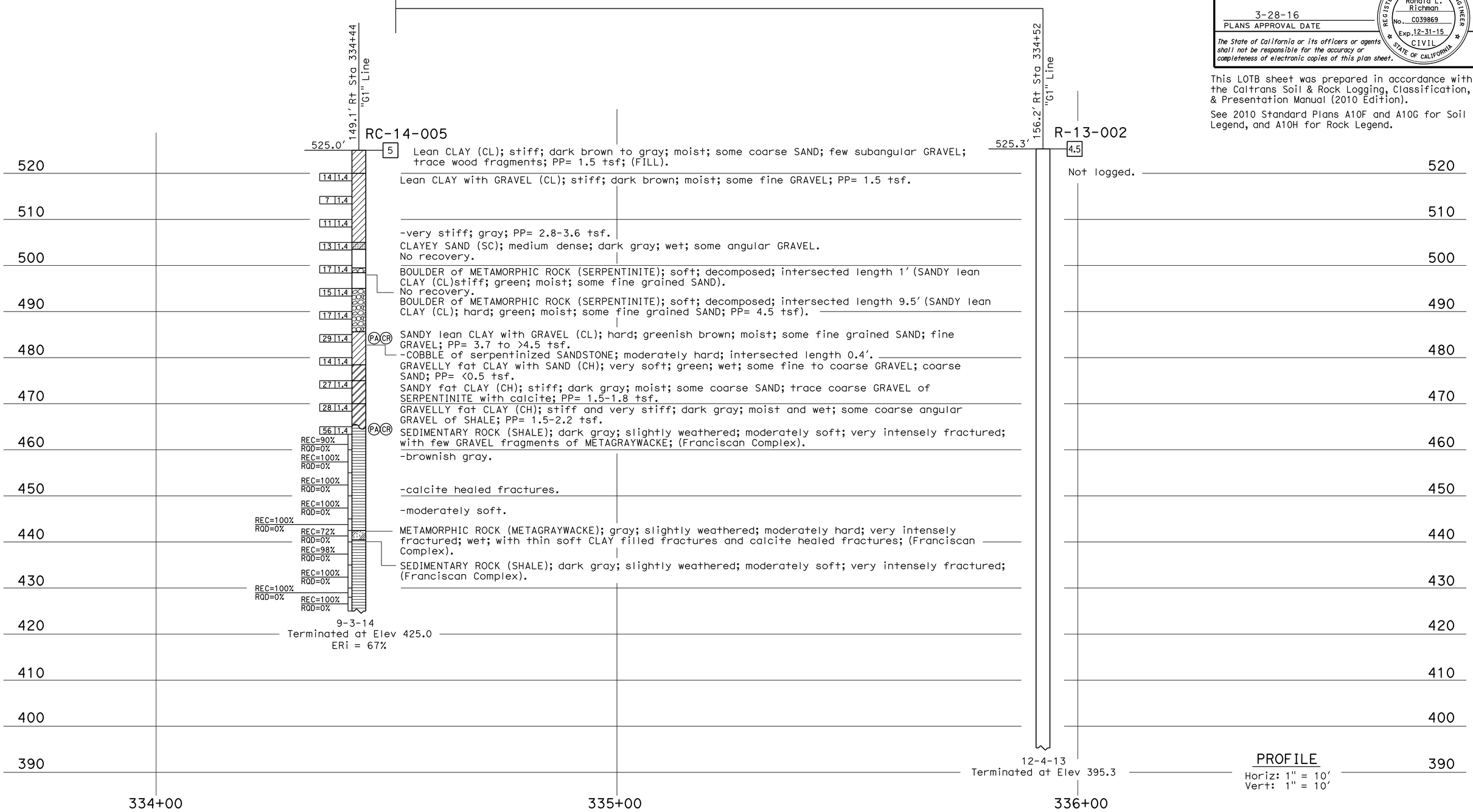

PROFILE
Horiz: 1" = 10'
Vert: 1" = 10'

ENGINEERING SERVICES	MATERIALS AND GEOTECHNICAL SERVICES	STATE OF CALIFORNIA DEPARTMENT OF TRANSPORTATION	DIVISION OF ENGINEERING SERVICES STRUCTURE DESIGN DESIGN BRANCH 1	BRIDGE NO. 10E0036 POST MILE 5.16	PEREGRINE SLIDE RETAINING WALL LOG OF TEST BORINGS 3 OF 10
FUNCTIONAL SUPERVISOR NAME: C. Narwold	DRAWN BY: I. G-Remmen CHECKED BY: R. Newman	FIELD INVESTIGATION BY: R. Richman, C. Hoadley, C. Ewing (KLEINFELDER)			

OGS CIVIL LOG OF TEST BORINGS SHEET

ORIGINAL SCALE IN INCHES FOR REDUCED PLANS 0 1 2 3

UNIT: 3650
PROJECT NUMBER & PHASE: 01120001331
CONTRACT NO.: 01-0B5004

DISREGARD PRINTS BEARING EARLIER REVISION DATES

REVISION DATES: 05-29-15 09/04/15 08/26/15

SHEET 16 OF 23

FILE => peregrine-z-lt03.dgn

USERNAME => s119538 DATE PLOTTED => 18-APR-2016 TIME PLOTTED => 11:15

DIST	COUNTY	ROUTE	POST MILES TOTAL PROJECT	SHEET No.	TOTAL SHEETS
01	Men	101	3.8, 5.3	93	99

Ronald L. Richman 8-18-15
REGISTERED CIVIL ENGINEER DATE

3-28-16
PLANS APPROVAL DATE

REGISTERED PROFESSIONAL ENGINEER Ronald L. Richman No. C039869 Exp. 12-31-15 CIVIL STATE OF CALIFORNIA

The State of California or its officers or agents shall not be responsible for the accuracy or completeness of electronic copies of this plan sheet.

This LOTB sheet was prepared in accordance with the Caltrans Soil & Rock Logging, Classification, & Presentation Manual (2010 Edition).

See 2010 Standard Plans A10F and A10G for Soil Legend, and A10H for Rock Legend.

FOR PLAN VIEW, SEE
"LOG OF TEST BORINGS 1 OF 10"

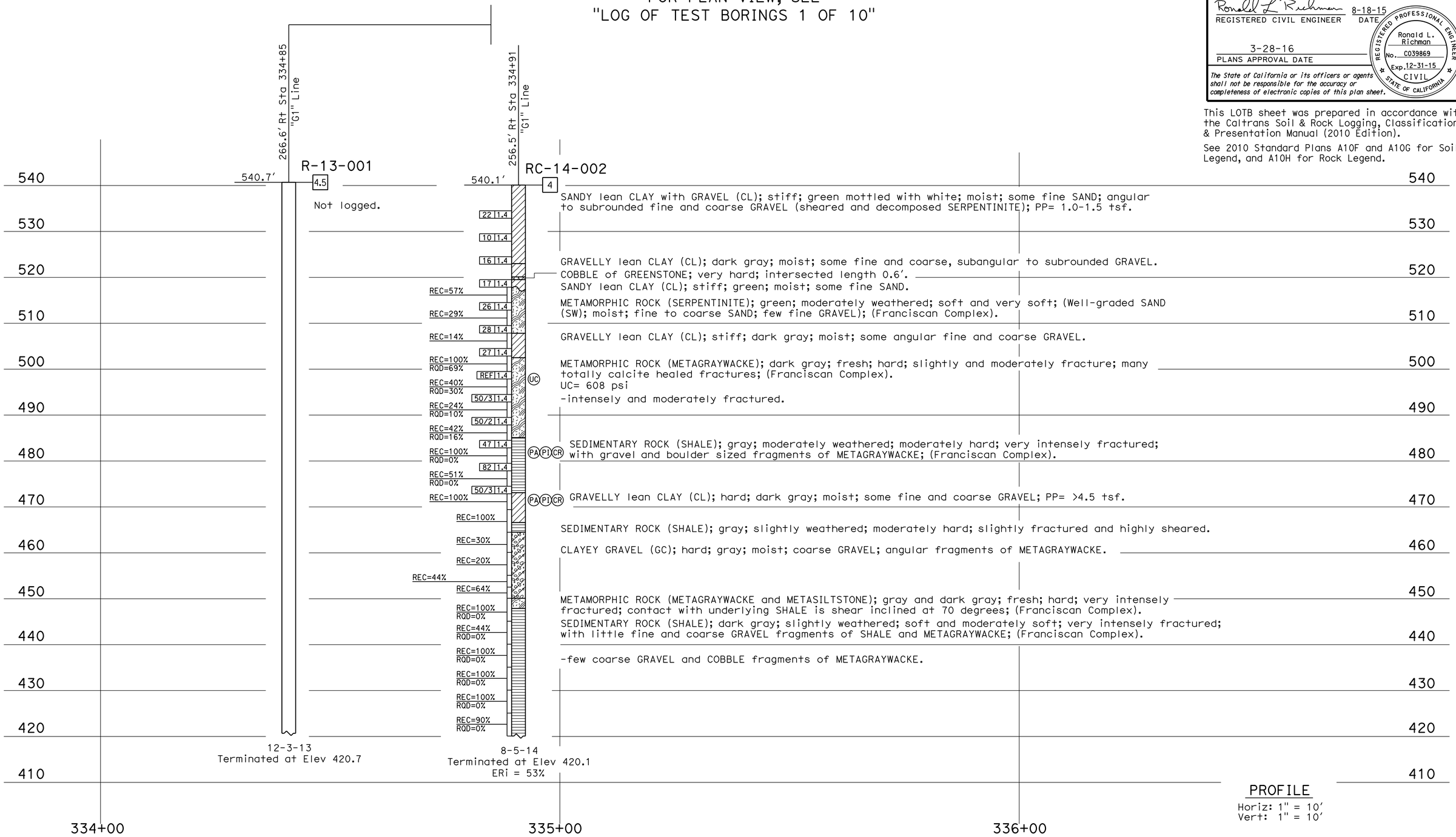

ENGINEERING SERVICES	MATERIALS AND GEOTECHNICAL SERVICES	STATE OF CALIFORNIA DEPARTMENT OF TRANSPORTATION	DIVISION OF ENGINEERING SERVICES STRUCTURE DESIGN DESIGN BRANCH 1	BRIDGE NO. 10E0036 POST MILE 5.16	PEREGRINE SLIDE RETAINING WALL LOG OF TEST BORINGS 4 OF 10
FUNCTIONAL SUPERVISOR NAME: C. Narwold	DRAWN BY: I. G-Remmen CHECKED BY: R. Newman	FIELD INVESTIGATION BY: R. Richman, C. Hoadley, T. Liao C. Ewing (KLEINFELDER)			

OGS CIVIL LOG OF TEST BORINGS SHEET

ORIGINAL SCALE IN INCHES FOR REDUCED PLANS 0 1 2 3

UNIT: 3650
PROJECT NUMBER & PHASE: 01120001331 CONTRACT NO.: 01-0B5004

DISREGARD PRINTS BEARING EARLIER REVISION DATES → REVISION DATES 05-29-15 09/04/15 08/26/15 SHEET 17 OF 23

FILE => peregrine-z-lt04.dgn

USERNAME => s119538 DATE PLOTTED => 18-APR-2016 TIME PLOTTED => 11:15

DIST	COUNTY	ROUTE	POST MILES TOTAL PROJECT	SHEET No.	TOTAL SHEETS
01	Men	101	3.8, 5.3	94	99

Ronald L. Richman 8-18-15
REGISTERED CIVIL ENGINEER DATE

3-28-16
PLANS APPROVAL DATE

REGISTERED PROFESSIONAL ENGINEER Ronald L. Richman No. C039869 Exp. 12-31-15 CIVIL STATE OF CALIFORNIA

The State of California or its officers or agents shall not be responsible for the accuracy or completeness of electronic copies of this plan sheet.

This LOTB sheet was prepared in accordance with the Caltrans Soil & Rock Logging, Classification, & Presentation Manual (2010 Edition).

See 2010 Standard Plans A10F and A10G for Soil Legend, and A10H for Rock Legend.

FOR PLAN VIEW, SEE
"LOG OF TEST BORINGS 1 OF 10"

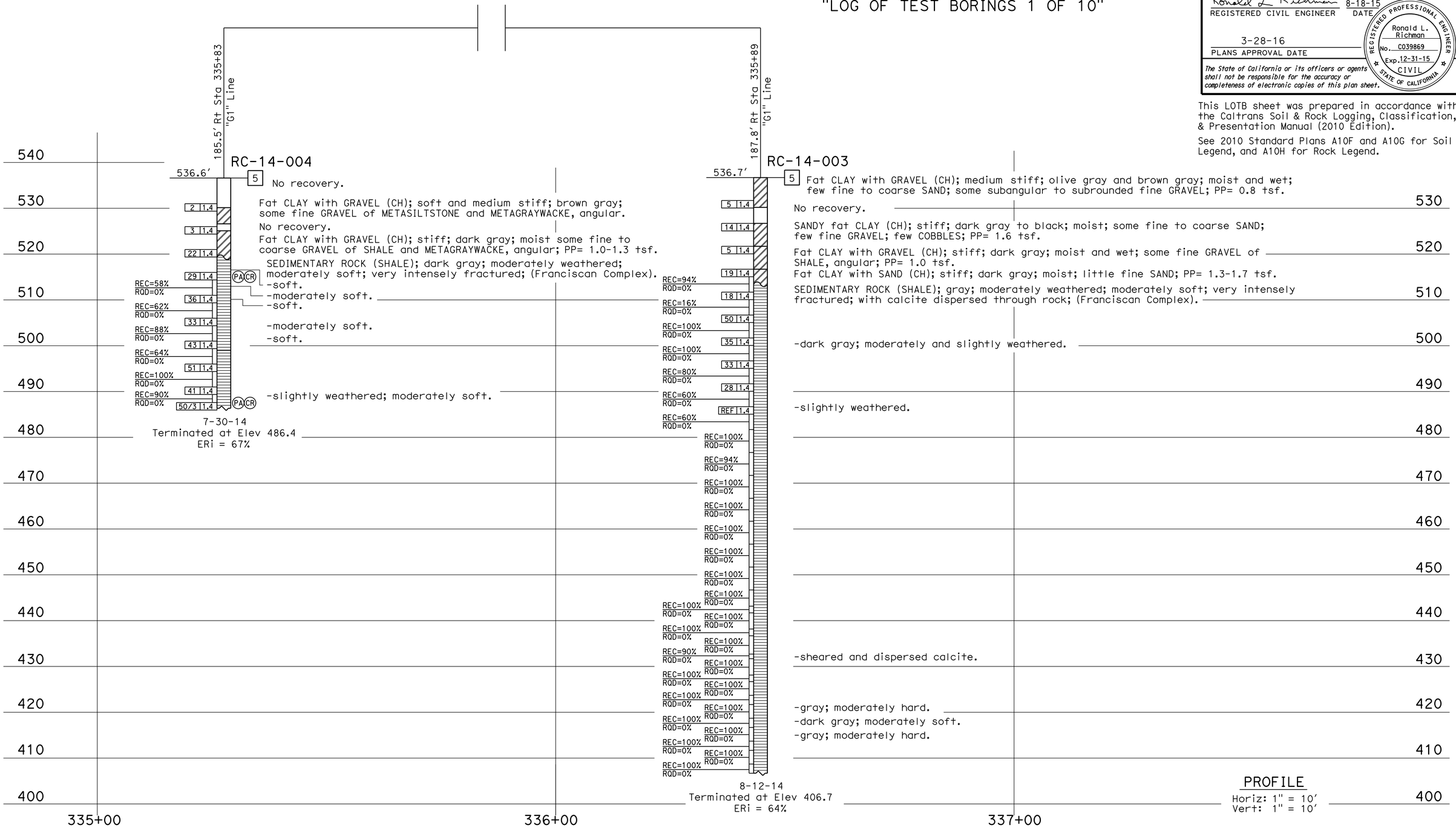

ENGINEERING SERVICES	MATERIALS AND GEOTECHNICAL SERVICES	STATE OF CALIFORNIA DEPARTMENT OF TRANSPORTATION	DIVISION OF ENGINEERING SERVICES STRUCTURE DESIGN DESIGN BRANCH 1	BRIDGE NO. 10E0036 POST MILE 5.16	PEREGRINE SLIDE RETAINING WALL LOG OF TEST BORINGS 5 OF 10
FUNCTIONAL SUPERVISOR NAME: C. Narwold	DRAWN BY: I. G-Remmen CHECKED BY: R. Newman	FIELD INVESTIGATION BY: R. Richman C. Ewing (KLEINFELDER)			

OGS CIVIL LOG OF TEST BORINGS SHEET

ORIGINAL SCALE IN INCHES FOR REDUCED PLANS 0 1 2 3

UNIT: 3650
PROJECT NUMBER & PHASE: 01120001331 CONTRACT NO.: 01-0B5004

DISREGARD PRINTS BEARING EARLIER REVISION DATES → REVISION DATES ~~05-29-15~~ 08/26/15 09/04/15

SHEET 18 OF 23

FILE => peregrine-z-1t05.dgn

USERNAME => s119538 DATE PLOTTED => 18-APR-2016 TIME PLOTTED => 11:15

DIST	COUNTY	ROUTE	POST MILES TOTAL PROJECT	SHEET No.	TOTAL SHEETS
01	Men	101	3.8, 5.3	95	99

Ronald L. Richman 8-18-15
REGISTERED CIVIL ENGINEER DATE

3-28-16
PLANS APPROVAL DATE

REGISTERED PROFESSIONAL ENGINEER Ronald L. Richman No. C039869 Exp. 12-31-15 CIVIL STATE OF CALIFORNIA

The State of California or its officers or agents shall not be responsible for the accuracy or completeness of electronic copies of this plan sheet.

This LOTB sheet was prepared in accordance with the Caltrans Soil & Rock Logging, Classification, & Presentation Manual (2010 Edition).

See 2010 Standard Plans A10F and A10G for Soil Legend, and A10H for Rock Legend.

FOR PLAN VIEW, SEE
"LOG OF TEST BORINGS 1 OF 10"

271.7' Rt Sta 336+47 "G1" Line

RC-14-001

553.0'

550 — 5 Lean CLAY (CL); very soft to medium stiff; grayish brown; moist and wet; few SAND; fine and medium SAND; low plasticity fines; PP= 0.2-1.0 tsf.

BOULDER of SEDIMENTARY ROCK (SANDSTONE); fine grained; dark gray; intensely weathered; moderately hard; friable.

50/3 1.4 — Poorly-graded SAND with CLAY and GRAVEL (SP-SC); medium dense; brownish gray; moist; mostly fine SAND; little fine GRAVEL; low plasticity fines.

540 — 17 1.4 — Lean to fat CLAY with GRAVEL (CL/CH); stiff to hard; dark gray; moist; little fine GRAVEL; medium to high plasticity; PP= 1.7-4.5 tsf.
-few GRAVEL.

Lean to fat CLAY with SAND (CL/CH); hard; moist; few to little fine to coarse SAND; medium to high plasticity; PP >4.5 tsf.

530 — 24 1.4 — PA PI CR — SANDY lean CLAY with GRAVEL (CL); hard; gray to dark gray; moist; some fine to coarse SAND; few fine GRAVEL, subangular; PP >4.5 tsf.

18 1.4 — METAMORPHIC ROCK (METASANDSTONE); gray green; intensely weathered to decomposed; moderately soft; slightly fractured; (CLAYEY SAND (SC); medium dense; moist; fine grained SAND; (Franciscan Complex).

520 — 22 1.4 — REC=100% RQD=0% — SEDIMENTARY ROCK (SHALE); dark gray; slightly weathered; moderately soft; very intensely fractured; with some fine GRAVEL fragments of SHALE and METAGRAYWACKE (Franciscan Complex).

27 1.4 — REC=100% RQD=0% — PA PI CR

510 — 31 1.4 — REC=100% RQD=0%

45 1.4 — REC=100% RQD=0%

500 — 50/5 1.4 — REC=100% RQD=0% — -green gray; partially serpentinized.

50/5 1.4 — REC=100% RQD=0%

490 — 50/4 1.4 — REC=60% RQD=0% — 4 — SEDIMENTARY ROCK (SHALE); dark gray; slightly weathered; moderately soft; very intensely fractured; with some fine GRAVEL fragments of SHALE and METAGRAYWACKE (Franciscan Complex).

REC=100% RQD=0% — PA PI CR — -highly sheared with few coarse GRAVEL and fine GRAVEL fragments of moderately hard SHALE; (Franciscan Complex).

480 — REC=100% RQD=0%

REC=60% RQD=0%

470 — REC=90% RQD=0%

REC=100% RQD=0%

460 — REC=100% RQD=0% — -moderately hard; intensely fractured.

REC=100% RQD=0%

450 — REC=100% RQD=0%

REC=100% RQD=0%

440 — REC=100% RQD=0%

REC=86% RQD=0%

430

7-30-14
Terminated at Elev 433.0
ERi = 67%

420

PROFILE
Horiz: 1" = 10'
Vert: 1" = 10'

336+00 337+00 338+00

ENGINEERING SERVICES	MATERIALS AND GEOTECHNICAL SERVICES	STATE OF CALIFORNIA DEPARTMENT OF TRANSPORTATION	DIVISION OF ENGINEERING SERVICES STRUCTURE DESIGN DESIGN BRANCH 1	BRIDGE NO. 10E0036 POST MILE 5.16	PEREGRINE SLIDE RETAINING WALL LOG OF TEST BORINGS 6 OF 10
FUNCTIONAL SUPERVISOR NAME: C. Narwold	DRAWN BY: I. G-Remmen CHECKED BY: R. Newman	FIELD INVESTIGATION BY: R. Richman C. Ewing (KLEINFELDER)			

OGS CIVIL LOG OF TEST BORINGS SHEET

ORIGINAL SCALE IN INCHES FOR REDUCED PLANS 0 1 2 3

UNIT: 3650
PROJECT NUMBER & PHASE: 01120001331 CONTRACT NO.: 01-0B5004

DISREGARD PRINTS BEARING EARLIER REVISION DATES → REVISION DATES ~~05-29-15~~ 09/04/15 ~~08/26/15~~ SHEET 19 OF 23

FILE => peregrine-z-lt06.dgn

USERNAME => s119538 DATE PLOTTED => 18-APR-2016 TIME PLOTTED => 11:15

DIST	COUNTY	ROUTE	POST MILES TOTAL PROJECT	SHEET No.	TOTAL SHEETS
01	Men	101	3.8, 5.3	96	99

REGISTERED CIVIL ENGINEER 8-18-15 DATE

3-28-16
PLANS APPROVAL DATE

REGISTERED PROFESSIONAL ENGINEER Kathy Gallagher No. C62012 Exp. 9-30-15 CIVIL STATE OF CALIFORNIA

The State of California or its officers or agents shall not be responsible for the accuracy or completeness of electronic copies of this plan sheet.

This LOTB sheet was prepared in accordance with the Caltrans Soil & Rock Logging, Classification, & Presentation Manual (2010 Edition), except as noted below.

No Pocket Penetrometer or Torvane Data reported on cohesive soils in Boring RC-11-001.

See 2010 Standard Plans A10F and A10G for Soil Legend, and A10H for Rock Legend.

FOR PLAN VIEW, SEE
"LOG OF TEST BORINGS 1 OF 10"

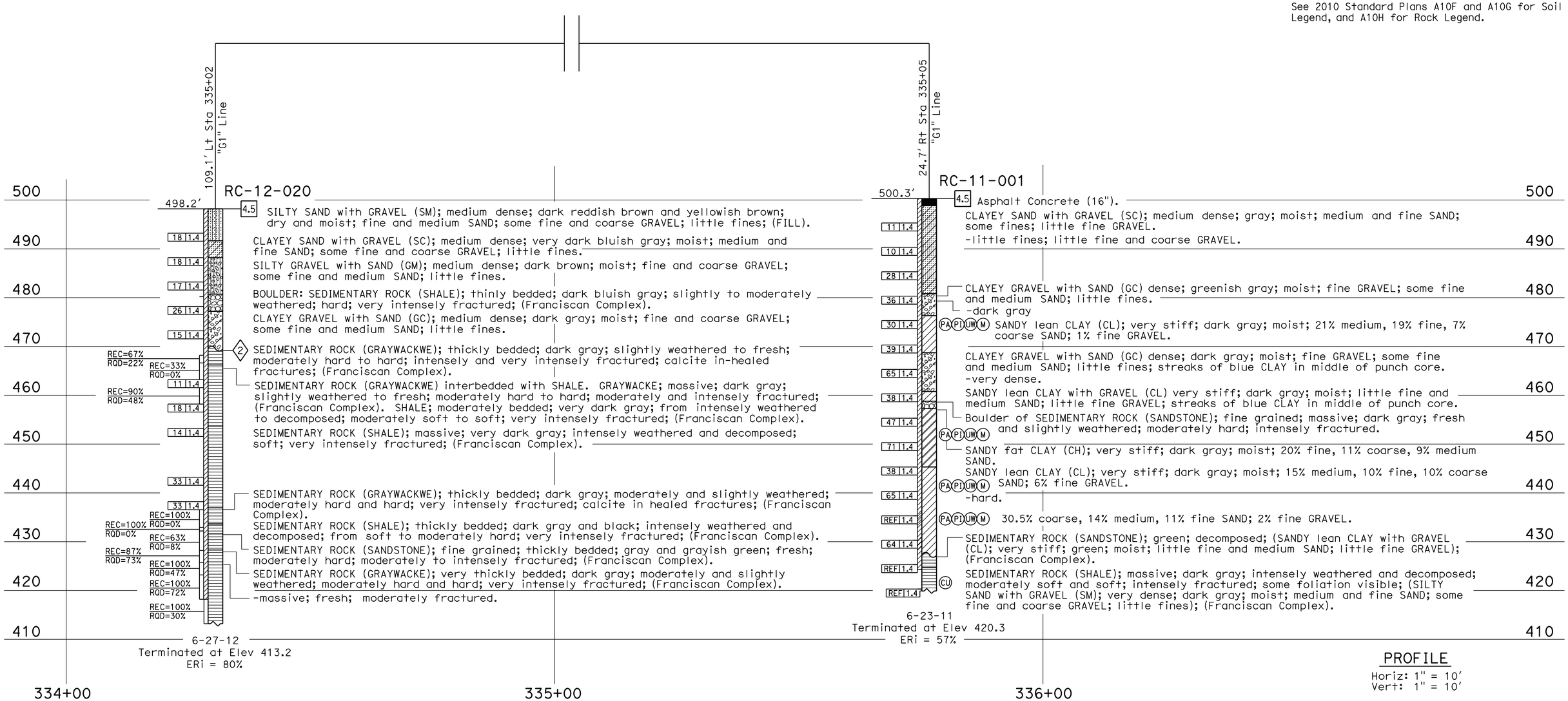

ENGINEERING SERVICES	MATERIALS AND GEOTECHNICAL SERVICES	STATE OF CALIFORNIA DEPARTMENT OF TRANSPORTATION	DIVISION OF ENGINEERING SERVICES STRUCTURE DESIGN DESIGN BRANCH 1	BRIDGE NO. 10E0036 POST MILE 5.16	PEREGRINE SLIDE RETAINING WALL LOG OF TEST BORINGS 7 OF 10
FUNCTIONAL SUPERVISOR NAME: C. Narwold	DRAWN BY: I. G-Remmen CHECKED BY: R. Newman	FIELD INVESTIGATION BY: K. Gallagher			

OGS CIVIL LOG OF TEST BORINGS SHEET

ORIGINAL SCALE IN INCHES FOR REDUCED PLANS 0 1 2 3

UNIT: 3650
PROJECT NUMBER & PHASE: 01120001331 CONTRACT NO.: 01-0B5004

DISREGARD PRINTS BEARING EARLIER REVISION DATES

REVISION DATES: 05-29-15 08/26/15 09/04/15 SHEET 20 OF 23

FILE => peregrine-z-lt07.dgn

USERNAME => s119538 DATE PLOTTED => 18-APR-2016 TIME PLOTTED => 11:15

DIST	COUNTY	ROUTE	POST MILES TOTAL PROJECT	SHEET No.	TOTAL SHEETS
01	Men	101	3.8, 5.3	97	99

REGISTERED CIVIL ENGINEER — DATE 8-18-15

3-28-16
PLANS APPROVAL DATE

REGISTERED PROFESSIONAL ENGINEER — Kathy Gallagher — No. C62012 — Exp. 9-30-15 — CIVIL — STATE OF CALIFORNIA

The State of California or its officers or agents shall not be responsible for the accuracy or completeness of electronic copies of this plan sheet.

This LOTB sheet was prepared in accordance with the Caltrans Soil & Rock Logging, Classification, & Presentation Manual (2010 Edition) except as noted below.

No Pocket Penetrometer or Torvane data reported on cohesive soils in Boring RC-11-002.

See 2010 Standard Plans A10F and A10G for Soil Legend, and A10H for Rock Legend.

FOR PLAN VIEW, SEE
"LOG OF TEST BORINGS 1 OF 10"

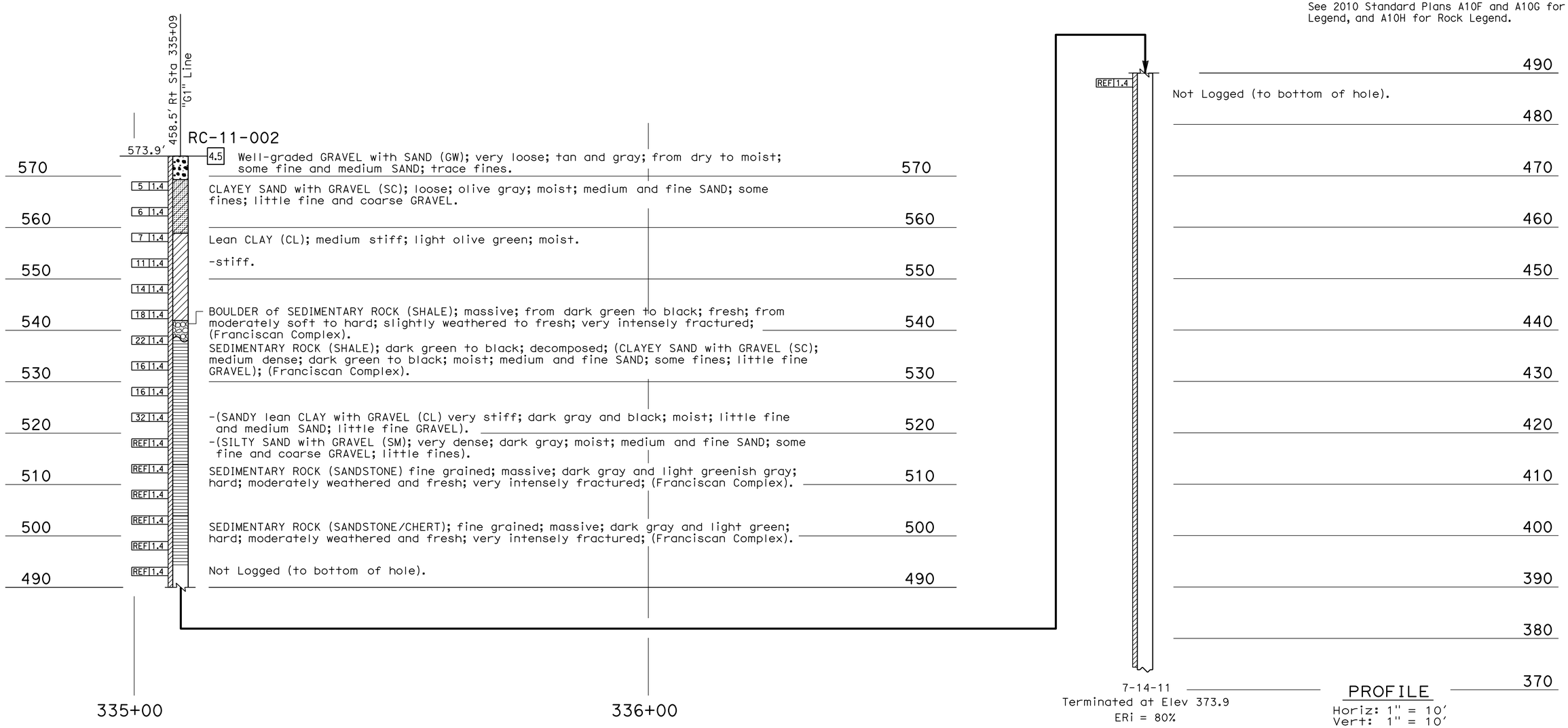

ENGINEERING SERVICES	MATERIALS AND GEOTECHNICAL SERVICES	STATE OF CALIFORNIA DEPARTMENT OF TRANSPORTATION	DIVISION OF ENGINEERING SERVICES STRUCTURE DESIGN DESIGN BRANCH 1	BRIDGE NO. 10E0036 POST MILE 5.16	PEREGRINE SLIDE RETAINING WALL LOG OF TEST BORINGS 8 OF 10
FUNCTIONAL SUPERVISOR NAME: C. Narwold	DRAWN BY: I. G-Remmen CHECKED BY: R. Newman	FIELD INVESTIGATION BY: K. Gallagher			

OGS CIVIL LOG OF TEST BORINGS SHEET — ORIGINAL SCALE IN INCHES FOR REDUCED PLANS 0 1 2 3

UNIT: 3650
PROJECT NUMBER & PHASE: 01120001331 — CONTRACT NO.: 01-0B5004

DISREGARD PRINTS BEARING EARLIER REVISION DATES → REVISION DATES 05-29-15 09/04/15 08/26/15 — SHEET 21 OF 23

FILE => peregrine-z-lt08.dgn

USERNAME => s119538 DATE PLOTTED => 18-APR-2016 TIME PLOTTED => 11:15

DIST	COUNTY	ROUTE	POST MILES TOTAL PROJECT	SHEET No.	TOTAL SHEETS
01	Men	101	3.8, 5.3	98	99

REGISTERED CIVIL ENGINEER 8-18-15 DATE

3-28-16
PLANS APPROVAL DATE

REGISTERED PROFESSIONAL ENGINEER Kathy Gallagher No. C62012 Exp. 9-30-15 CIVIL STATE OF CALIFORNIA

The State of California or its officers or agents shall not be responsible for the accuracy or completeness of electronic copies of this plan sheet.

This LOTB sheet was prepared in accordance with the Caltrans Soil & Rock Logging, Classification, & Presentation Manual (2010 Edition).

See 2010 Standard Plans A10F and A10G for Soil Legend, and A10H for Rock Legend.

FOR PLAN VIEW, SEE
"LOG OF TEST BORINGS 1 OF 10"

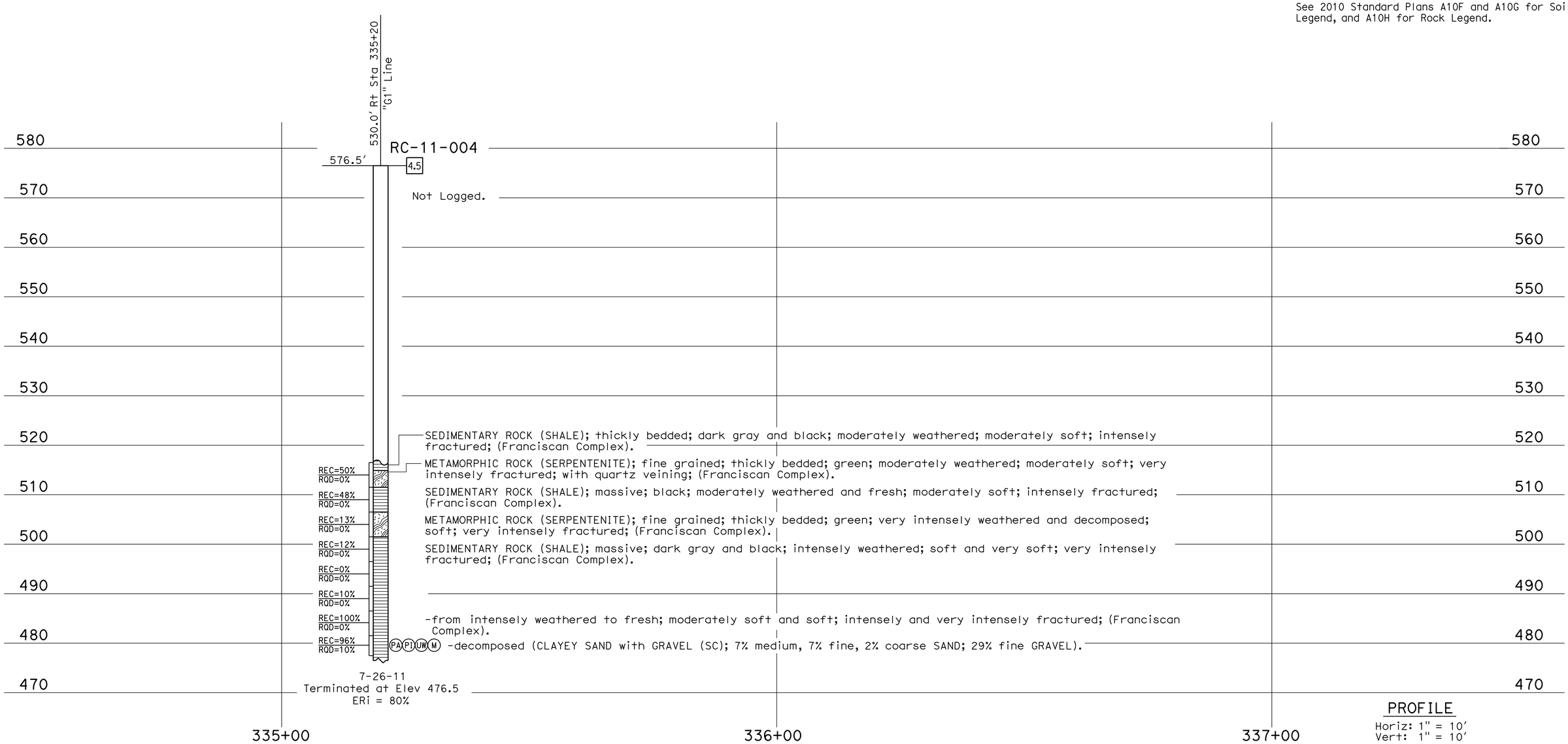

ENGINEERING SERVICES	MATERIALS AND GEOTECHNICAL SERVICES	STATE OF CALIFORNIA DEPARTMENT OF TRANSPORTATION	DIVISION OF ENGINEERING SERVICES STRUCTURE DESIGN DESIGN BRANCH 1	BRIDGE NO. 10E0036 POST MILE 5.16	PEREGRINE SLIDE RETAINING WALL LOG OF TEST BORINGS 9 OF 10
FUNCTIONAL SUPERVISOR NAME: C. Narwold	DRAWN BY: I. G-Remmen CHECKED BY: R. Newman	FIELD INVESTIGATION BY: K. Gallagher			

OGS CIVIL LOG OF TEST BORINGS SHEET

ORIGINAL SCALE IN INCHES FOR REDUCED PLANS 0 1 2 3

UNIT: 3650
PROJECT NUMBER & PHASE: 01120001331 CONTRACT NO.: 01-0B5004

DISREGARD PRINTS BEARING EARLIER REVISION DATES → REVISION DATES 05-29-15 09/04/15 08/26/15 SHEET 22 OF 23

FILE => peregrine-z-lt09.dgn

USERNAME => s119538 DATE PLOTTED => 18-APR-2016 TIME PLOTTED => 11:15

DIST	COUNTY	ROUTE	POST MILES TOTAL PROJECT	SHEET No.	TOTAL SHEETS
01	Men	101	3.8, 5.3	99	99

REGISTERED CIVIL ENGINEER 8-18-15 DATE

3-28-16
PLANS APPROVAL DATE

REGISTERED PROFESSIONAL ENGINEER Kathy Gallagher No. C62012 Exp. 9-30-15 CIVIL STATE OF CALIFORNIA

The State of California or its officers or agents shall not be responsible for the accuracy or completeness of electronic copies of this plan sheet.

This LOTB sheet was prepared in accordance with the Caltrans Soil & Rock Logging, Classification, & Presentation Manual (2010 Edition), except as noted below.

1. Recovery and RQD not recorded for interval Elev 430.3 to 455.3 in Boring RC-11-003.
2. No Pocket Penetrometer or Torvane data reported on cohesive soils in Boring RC-11-003.

See 2010 Standard Plans A10F and A10G for Soil Legend, and A10H for Rock Legend.

FOR PLAN VIEW, SEE "LOG OF TEST BORINGS 1 OF 10"

198.7' Rt Sta 335+55 "G1" Line

RC-11-003

539.3' 4.5

Lean CLAY with SAND (CL); stiff; dark gray; moist; 16% fine, 9% medium, 4% coarse SAND; 1% coarse GRAVEL.

10 1.4
8 1.4 (PA)(PI)(UW)(M) -green
7 1.4
8 1.4 -fine GRAVEL (SHALE).
11 1.4
16 1.4 CLAYEY GRAVEL with SAND (GC); medium dense; dark gray; moist; 49% fine, 5% coarse GRAVEL, 16% coarse, 6% medium, 5% fine SAND; 19% fines.
24 1.4 (PA)(PI)(UW)(M)
REF 1.4 SEDIMENTARY ROCK (SHALE); massive; from dark gray to black; intensely weathered; from moderately soft to soft; very intensely fractured; (Landslide Debris).
24 1.4 (PA)(PI)(UW)(M) -decomposed (CLAYEY SAND with GRAVEL (SC); 27% coarse, 3% medium, 4% fine SAND; 34% fine GRAVEL.
53 1.4 -thickly bedded; from gray to dark gray; intensely weathered and decomposed; (Landslide Debris).
40 1.4 (PA)(PI)(UW)(M) -trace organics (roots).
62 1.4 13% coarse; 18% medium, 11% fine SAND; 13% fine, 4% coarse GRAVEL.
2
REC=100% RQD=0% (PA)(PI)(UW)(M) SEDIMENTARY ROCK (SHALE); massive; dark gray and black; intensely weathered and decomposed; from soft to moderately hard; very intensely fractured; (SANDY lean CLAY (CL); 19% coarse, 14% medium, 7% fine SAND; 4% fine GRAVEL); (Franciscan Complex).
REC=100% RQD=0%
REC=100% RQD=9% SEDIMENTARY ROCK (SANDSTONE); fine grained; thinly bedded; gray and grayish green; fresh; moderately hard; moderately fractured; (Franciscan Complex).
REC=100% RQD=0% SEDIMENTARY ROCK (SHALE); massive; gray and black; moderately and intensely weathered; moderately soft and soft; intensely fractured and very intensely fractured; (Franciscan Complex).
-moderately weathered and decomposed; very intensely fractured.
(PA)(PI)(UW)(M) -(SANDY lean CLAY (CL); 15% coarse, 17% medium, 12% fine SAND; 1% fine GRAVEL).
-2 inch core green SANDSTONE.
REC=100% RQD=0%
REC=100% RQD=0% -very intensely fractured.
REC=100% RQD=0%
REC=100% RQD=0%
REC=100% RQD=0%
REC=100% RQD=0%
REC=100% RQD=0%
REC=100% RQD=0%
REC=100% RQD=0%
REC=100% RQD=0% -moderately weathered and fresh; from moderately soft to soft; (Franciscan Complex).
REC=100% RQD=0% -intensely weathered and decomposed; moderately soft and soft; (Franciscan Complex).

7-19-11
Terminated at Elev 375.3
ERi = 80%

216' Rt Sta 335+91 "G1" Line

RC-11-005

542' 4.5

Not logged.

7-28-11
Terminated at Elev 382

540 530 520 510 500 490 480 470 460 450 440 430 420 410 400 390 380 370

335+00 336+00 337+00

PROFILE
Horiz: 1" = 10'
Vert: 1" = 10'

ENGINEERING SERVICES	MATERIALS AND GEOTECHNICAL SERVICES	STATE OF CALIFORNIA DEPARTMENT OF TRANSPORTATION	DIVISION OF ENGINEERING SERVICES STRUCTURE DESIGN DESIGN BRANCH 1	BRIDGE NO. 10E0036 POST MILE 5.16	PEREGRINE SLIDE RETAINING WALL LOG OF TEST BORINGS 10 OF 10
FUNCTIONAL SUPERVISOR NAME: C. Narwold	DRAWN BY: I. G-Remmen CHECKED BY: R. Newman	FIELD INVESTIGATION BY: K. Gallagher			

OGS CIVIL LOG OF TEST BORINGS SHEET

ORIGINAL SCALE IN INCHES FOR REDUCED PLANS 0 1 2 3

UNIT: 3650
PROJECT NUMBER & PHASE: 01120001331 CONTRACT NO.: 01-0B5004

DISREGARD PRINTS BEARING EARLIER REVISION DATES → REVISION DATES ~~05-29-15~~ 09/04/15 ~~08/26/15~~ SHEET 23 OF 23

FILE => peregrine-z-lt10.dgn

USERNAME => s119538 DATE PLOTTED => 18-APR-2016 TIME PLOTTED => 11:15