Dist	COUNTY	ROUTE	POST MILES TOTAL PROJECT	SHEET No.	TOTAL SHEETS
01	Men	101	3.8, 5.3	2	99

4

3-28-16
REGISTERED CIVIL ENGINEER DATE

3-28-16
PLANS APPROVAL DATE

REGISTERED PROFESSIONAL ENGINEER NASIM HASAN No. 74083 Exp. 6-30-17 CIVIL STATE OF CALIFORNIA

THE STATE OF CALIFORNIA OR ITS OFFICERS OR AGENTS SHALL NOT BE RESPONSIBLE FOR THE ACCURACY OR COMPLETENESS OF SCANNED COPIES OF THIS PLAN SHEET.

NOTES:

1. DIMENSIONS OF THE PAVEMENT STRUCTURES (STRUCTURAL SECTIONS) ARE SUBJECT TO TOLERANCES SPECIFIED IN THE "G1"NDARD SPECIFICATIONS.
2. SUPERELEVATIONS ARE SHOWN ON THE SUPERELEVATION DIAGRAMS.
3. EXACT LOCATIONS AND TYPES OF HMA DIKE ARE SHOWN ON THE LAYOUTS AND SUMMARY OF QUANTITIES SHEETS.
4. FOR SAFETY EDGE SEE REVISED Std PLANS P74 & P75
5. FOR RETAINING WALLS SEE STRUCTURE PLANS

PAVEMENT CLIMATE REGION

LOW MOUNTAIN

DESIGN DESIGNATION (ROUTE 101)

ADT (2015) = 16,300
ADT (2025) = 19,900
DHV (2035) = 1,960 TI_{20} = 11.5
$ESAL_{20}$ = 7,844,800 V = 70 MPH

ABBREVIATION:

SRS SHOULDER RUMBLE STRIP (HMA, GROUND-IN-INDENTATION)

CRS CENTERLINE RUMBLE STRIP (HMA, GROUND-IN-INDENTATION)

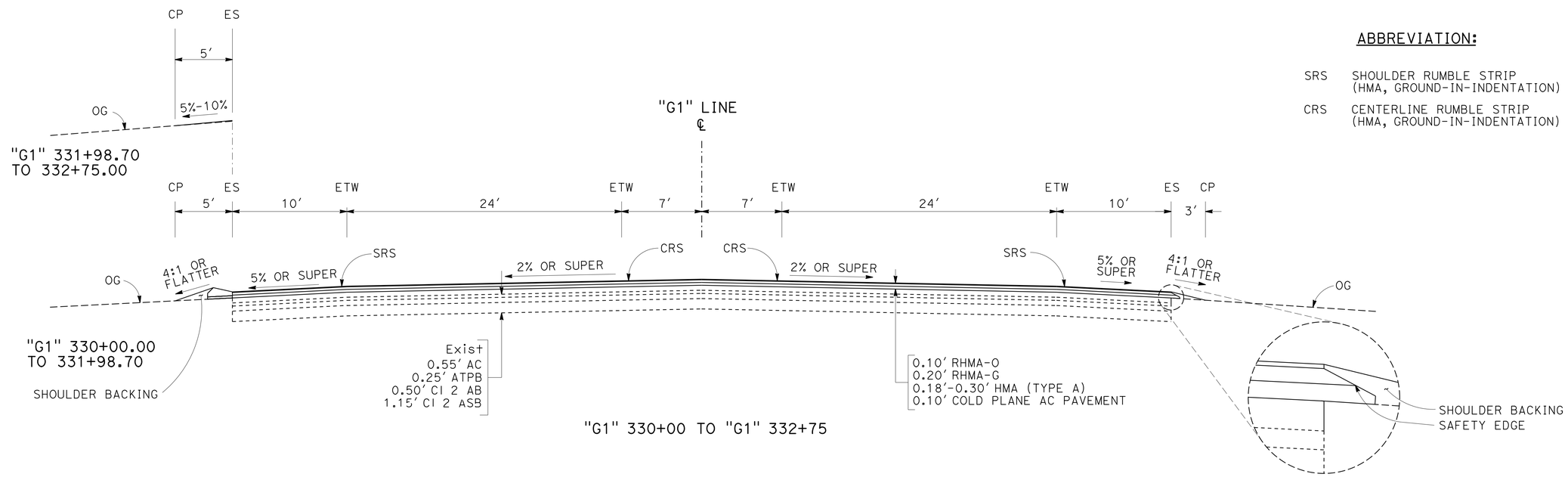

"G1" 330+00 TO "G1" 332+75

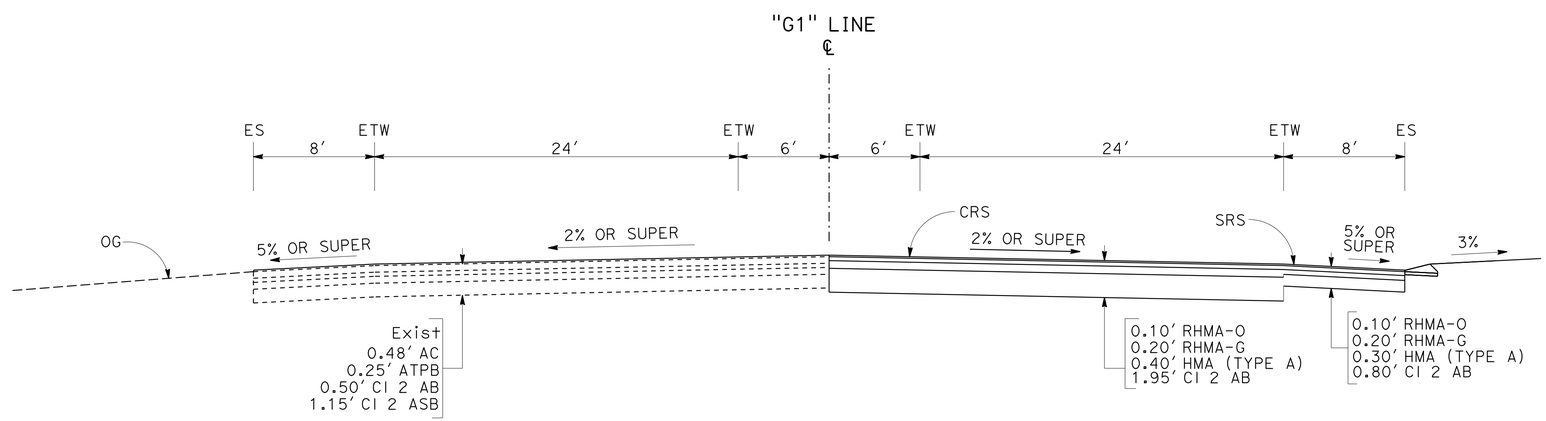

SOUTHBOUND

"G1" 261+30 TO 265+40

NORTHBOUND

"G1" 261+30 TO 265+40

ROUTE 101

4 **REPLACED PER ADDENDUM No. 4 DATED AUGUST 18, 2016**

TYPICAL CROSS SECTIONS

NO SCALE

X-1

REVISED BY | DATE REVISED
NASIM HASAN | DAVID HOPPER
CALCULATED-DESIGNED BY | CHECKED BY
FUNCTIONAL SUPERVISOR
ALI KIANI

STATE OF CALIFORNIA - DEPARTMENT OF TRANSPORTATION
Caltrans
03-DESIGN

LAST REVISION 00-00-00 | DATE PLOTTED => 17-AUG-2016 | TIME PLOTTED => 13:23

Dist	COUNTY	ROUTE	POST MILES TOTAL PROJECT	SHEET No.	TOTAL SHEETS
01	Men	101	3.8, 5.3	3	99

REGISTERED CIVIL ENGINEER 3-28-16 DATE

3-28-16
PLANS APPROVAL DATE

REGISTERED PROFESSIONAL ENGINEER
NASIM HASAN
No. 74083
Exp. 6-30-17
CIVIL
STATE OF CALIFORNIA

THE STATE OF CALIFORNIA OR ITS OFFICERS OR AGENTS SHALL NOT BE RESPONSIBLE FOR THE ACCURACY OR COMPLETENESS OF SCANNED COPIES OF THIS PLAN SHEET.

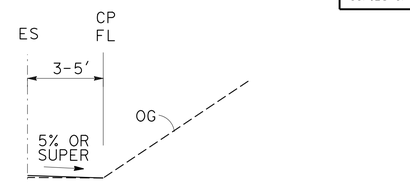

"G1" 337+51.00 TO "G1" 338+80

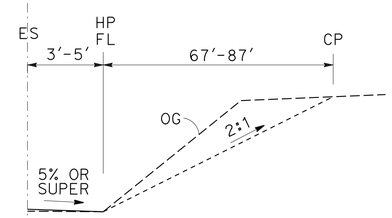

"G1" 337+21.83 TO "G1" 337+50

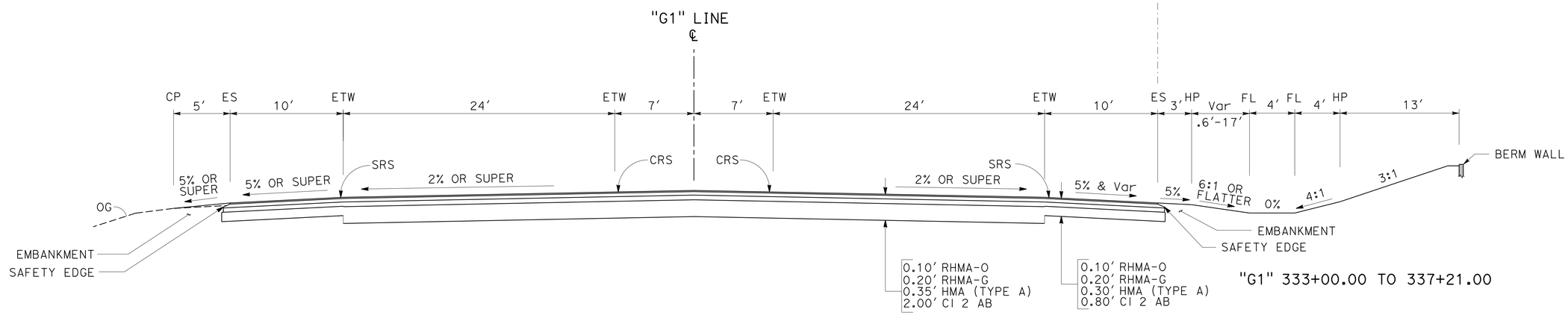

"G1" 333+00.00 TO 337+21.00

"G1" 332+75 TO 337+80

4 REPLACED PER ADDENDUM No. 4 DATED AUGUST 18, 2016

ROUTE 101

TYPICAL CROSS SECTIONS

NO SCALE

X-2

REVISED BY	DATE REVISED
NASIM HASAN	DAVID HOPPER
CALCULATED-DESIGNED BY	CHECKED BY
FUNCTIONAL SUPERVISOR	ALI KIANI

STATE OF CALIFORNIA - DEPARTMENT OF TRANSPORTATION
Caltrans
03-DESIGN

LAST REVISION 00-00-00
DATE PLOTTED => 17-AUG-2016
TIME PLOTTED => 13:23

Dist	COUNTY	ROUTE	POST MILES TOTAL PROJECT	SHEET No.	TOTAL SHEETS
01	Men	101	3.8, 5.3	12	99

REGISTERED CIVIL ENGINEER 3-28-16 DATE

3-28-16
PLANS APPROVAL DATE

REGISTERED PROFESSIONAL ENGINEER NASIM HASAN No. 74083 Exp. 6-30-17 CIVIL STATE OF CALIFORNIA

THE STATE OF CALIFORNIA OR ITS OFFICERS OR AGENTS SHALL NOT BE RESPONSIBLE FOR THE ACCURACY OR COMPLETENESS OF SCANNED COPIES OF THIS PLAN SHEET.

4

NOTES:

1. WIDTH OF IMPORTED BORROW VARIES FROM 2' MIN. AT TOP OF SLOPE TO 6' MAX. AT TOE OF SLOPE.
2. FOR BERM WALL DETAILS SEE Std plan RSP B3-7A 1

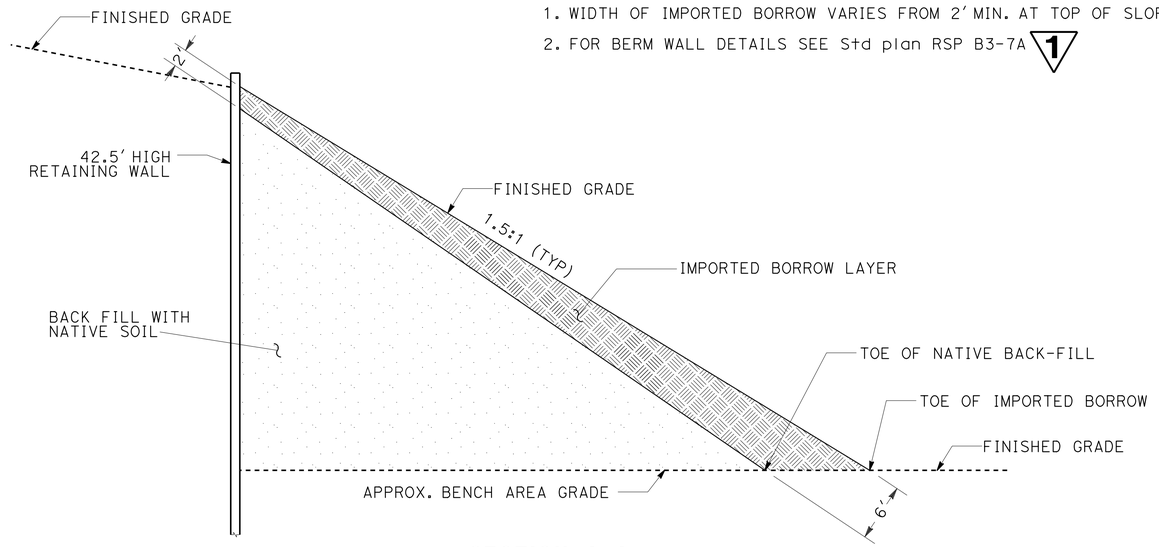

SECTION A-A
NO SCALE

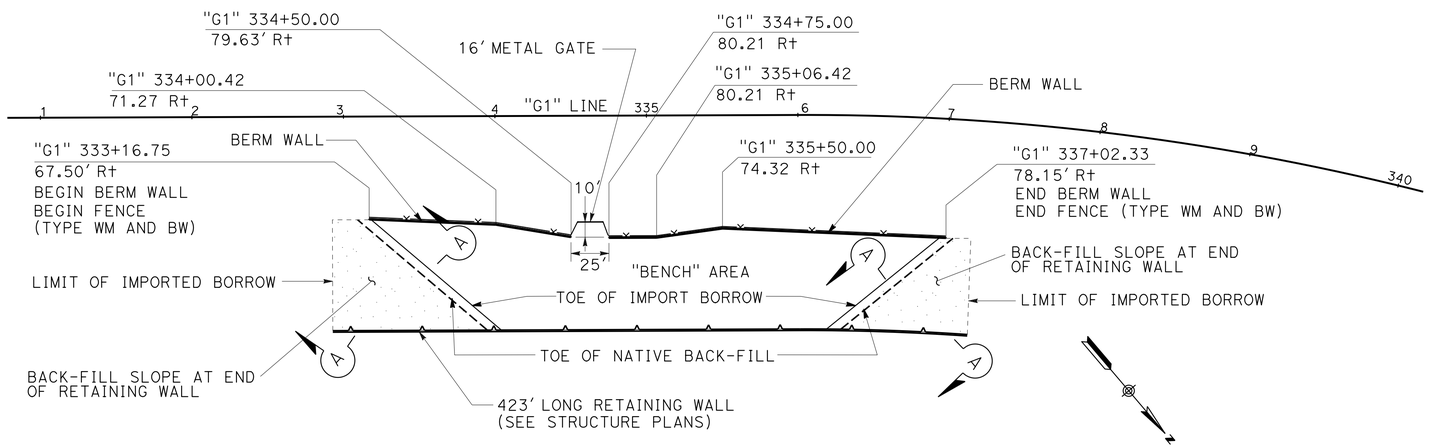

PLAN
NO SCALE

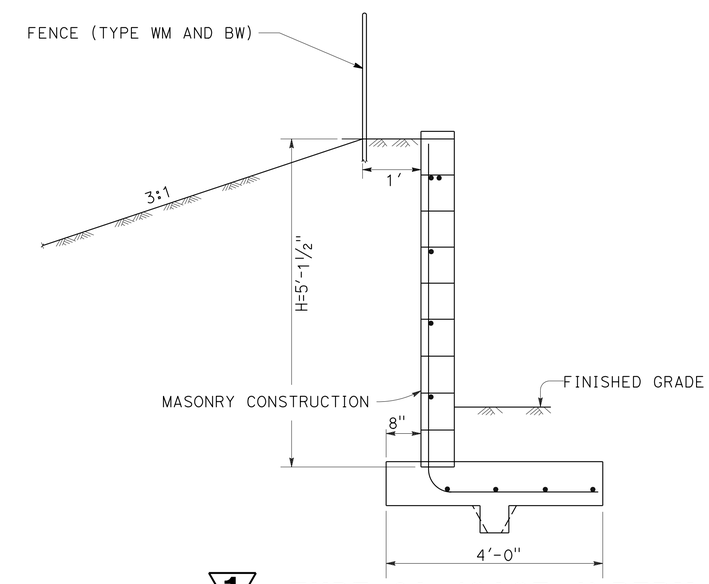

1 **TYPE 6A (CASE 1) BERM WALL DETAILS**

DETAILS SHOWING BERM WALL & IMPORTED BORROW ON SLOPES AT RETAINING WALL ENDS

"G1" 332+92.50 TO 337+26.12

1 **REPLACED PER ADDENDUM No. 1 DATED JULY 22, 2016**

4 **REPLACED PER ADDENDUM No. 4 DATED AUGUST 18, 2016**

CONSTRUCTION DETAILS
NO SCALE

C-5

STATE OF CALIFORNIA - DEPARTMENT OF TRANSPORTATION
Caltrans
03-DESIGN

FUNCTIONAL SUPERVISOR: ALI KIANI
CALCULATED-DESIGNED BY: NASIM HASAN
CHECKED BY: DAVID HOPPER
REVISED BY
DATE REVISED

LAST REVISION 00-00-00
DATE PLOTTED => 17-AUG-2016
TIME PLOTTED => 13:23

Dist	COUNTY	ROUTE	POST MILES TOTAL PROJECT	SHEET No.	TOTAL SHEETS
01	Men	101	3.8, 5.3	23	99

4

REGISTERED CIVIL ENGINEER 3-28-16 DATE

3-28-16
PLANS APPROVAL DATE

REGISTERED PROFESSIONAL ENGINEER NASIM HASAN No. 74083 Exp. 6-30-17 CIVIL STATE OF CALIFORNIA

THE STATE OF CALIFORNIA OR ITS OFFICERS OR AGENTS SHALL NOT BE RESPONSIBLE FOR THE ACCURACY OR COMPLETENESS OF SCANNED COPIES OF THIS PLAN SHEET.

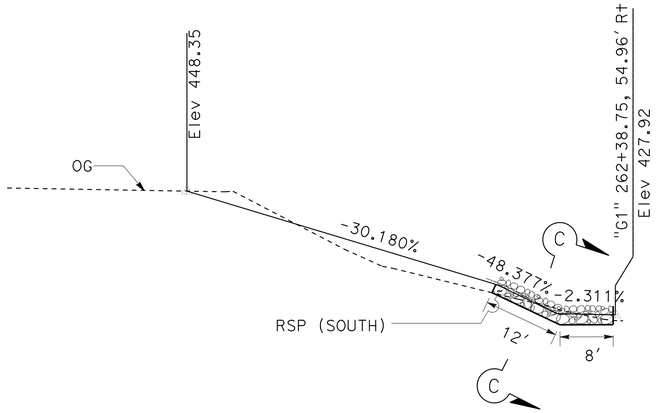

DETAILS OF RSP (SOUTH) AT LOCATION 1
NO SCALE

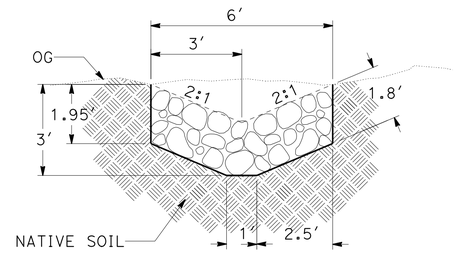

TYPICAL
SECTION C-C

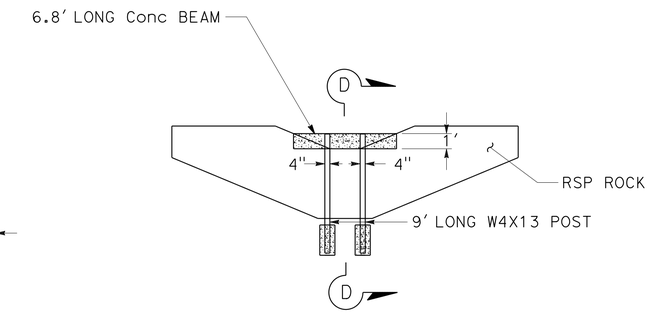

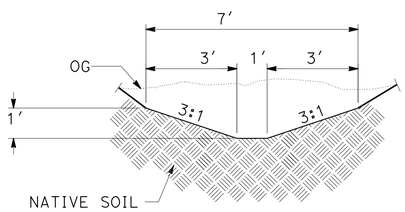

TYPICAL
SECTION A-A

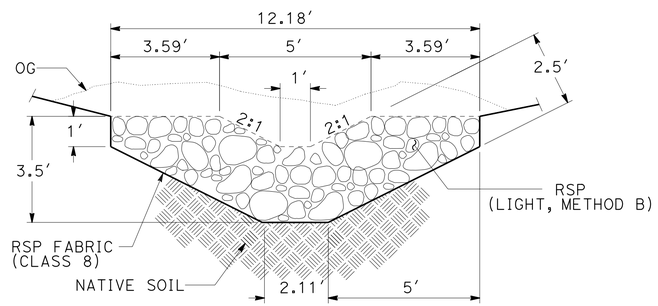

TYPICAL
SECTION B-B

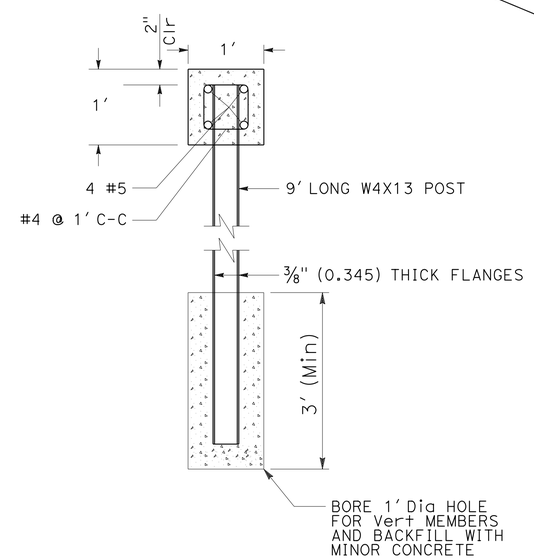

SECTION D-D

DETAILS OF WEIR 1 & WEIR 2 ON DS-2
SEE SHEET D-2 FOR LOCATION
NO SCALE

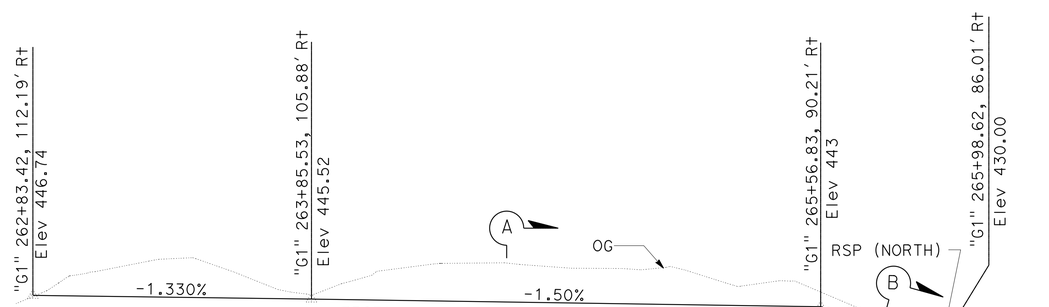

DETAILS OF DRAINAGE DITCH AT LOCATION 1
NO SCALE

4 **REPLACED PER ADDENDUM No. 4 DATED AUGUST 18, 2016**

NOTES:

1. WEIR 2 WILL BE PLACED 80' APART FROM WEIR 1
2. FOR PLAN VIEW OF DITCH SEE D-1.
3. FOR WEIR LOCATIONS SEE DP-1

DRAINAGE DETAILS
NO SCALE

DD-4

STATE OF CALIFORNIA - DEPARTMENT OF TRANSPORTATION
03-DESIGN
Caltrans
FUNCTIONAL SUPERVISOR: ALI KIANI
NASIM HASAN
REVISED BY | DATE REVISED
CALCULATED-DESIGNED BY | CHECKED BY

LAST REVISION 00-00-00 | DATE PLOTTED => 17-AUG-2016 | TIME PLOTTED => 13:23

Dist	COUNTY	ROUTE	POST MILES TOTAL PROJECT	SHEET No.	TOTAL SHEETS
01	Men	101	3.8, 5.3	32	99

REGISTERED CIVIL ENGINEER 3-28-16 DATE

3-28-16
PLANS APPROVAL DATE

REGISTERED PROFESSIONAL ENGINEER NASIM HASAN No. 74083 Exp. 6-30-17 CIVIL STATE OF CALIFORNIA

THE STATE OF CALIFORNIA OR ITS OFFICERS OR AGENTS SHALL NOT BE RESPONSIBLE FOR THE ACCURACY OR COMPLETENESS OF SCANNED COPIES OF THIS PLAN SHEET.

4

ROADWAY QUANTITIES

STATION	COLD PLANE ASPHALT CONCRETE PAVEMENT	ROADWAY EXCAVATION	STRUCTURE EXCAVATION	RUBBERIZED HOT MIX ASPHALT (OPEN GRADED)	RUBBERIZED HOT MIX ASPHALT (GAP GRADED)	HOT MIX ASPHALT (TYPE A)	MINOR HOT MIX ASPHALT	CLASS 2 AGGREGATE BASE	TACK COAT	SHOULDER BACKING	(N) EMBANKMENT	REMOVE FENCE	FENCE (TYPE WM AND BW)	CABLE RAILING	16' METAL GATE	MINOR CONCRETE (CURB)	IMPORTED BORROW
	SQYD	CY	CY	TON	TON	TON	TON	CY	TON	TON	CY	LF	LF	LF	EA	CY	CY
"G1" 261+30 TO 265+40		1,335.9	2,505.0	95.9	230.2	436.4		972.4	1		79.7						
"G1" 325+40 TO 326+60	911.1										281.3						
"G1" 329+00 TO 330+00	2,505.6			51.3	123.0				0.2								
"G1" 330+00 TO 332+75				140.9	338.3	405.9			1.3		500.0						
"G1" 332+75 TO 337+80		3,539.7	18,594.3	258.9	621.3	1,049.4		2,619.2	2.1		7,035						1427.9
"G1" 262+48.06 TO 265+51.10												292	306				
"G1" 329+95.37 TO 341+51.82												922	1,520				
"G1" 333+12.30 TO 336+89.15														379	1		
"G1" 333+05.95 TO 336+88.84						20.40		684.6									
"G1" 333+53.23 TO 336+38.10																8.70	
"G1" 333+66.13 TO 336+49.70										16.8							
HMA DIKE							16.0										
SAFETY EDGE					3.79	16.99		29.9									
TOTAL	3,416.7	4,875.6	21,099.3	547.0	1,316.59	1,929.09	16.0	4,306.1	4.6	16.8		1,214	1,826	379	1	8.70	1427.9

(N) - NOT A SEPARATE PAY ITEM, FOR INFORMATION ONLY

HORIZONTAL AND UNDERDRAIN QUANTITIES

SHEET No.	STATION	DRILL HOLE (HORIZONTAL DRAIN)	FURNISH AND INSTALL DRAIN PIPE (HORIZONTAL DRIAN)	8" WELDED STEEL PIPE (.134 THICK)	12" COLLECTOR SYSTEM (HORIZONTAL DRAIN AND GEOTEXTILE WALL DRAIN)	8" PLASTIC PIPE	8" PERFORATED PLASTIC PIPE UNDERDRAIN	(N) CLASS 1 PERMEABLE MATERIAL (BLANKET)	(N) DITCH EXCAVATION	DESCRIPTION
		LF	LF	LF	LF	LF	LF	CY	CY	
C1	"G1" 262+65 TO 265+82	3,000	3,040	300	305					
C1	"G1" 333+62 TO 336+47	5,250	5,292	315	281					HORIZONTAL DRAIN
C2	"G1" 262+42.14 TO 265+82.04					10	326.4	193.6	242.0	UNDERDRAIN, UD-1
C2	"G1" 333+65 TO 336+49					10	279.9	168.2	210.3	UNDERDRAIN, UD-2
C2	"G1" 332+95.31 TO 336+76.30					20	372.6	206.9	276.1	UNDERDRAIN, UD-3
TOTAL		8,250	8,332	615	586	40	978.9			

(N) - NOT A SEPARATE PAY ITEM, FOR INFORMATION ONLY

PLACE HMA DIKE

STATION	SIDE R+/L+	PLACE HMA DIKE (TYPE E) LF	MINOR HMA TON
"G1" 261+30 TO "G1" 265+40	R+	398.45	9.2
"G1" 329+00 TO "G1" 331+98.70	L+	294.83	6.8
TOTAL		693.28	16.0*

* FOR TOTAL QUANTITIES, SEE ROADWAY QUANTITIES

SAFETY EDGE

STATION	SIDE R+/L+	RHMA-G TON	HMA-A TON
"G1" 329+00 TO "G1" 330+00	R+	0.26	
"G1" 330+00 TO "G1" 332+75	R+	0.71	2.74
"G1" 331+98.70 TO "G1" 332+75	L+	0.20	0.76
"G1" 332+75 TO "G1" 337+80	R+/L+	2.62	13.49
TOTAL		3.79**	16.99**

** FOR TOTAL QUANTITIES, SEE ROADWAY QUANTITIES

4 **REPLACED PER ADDENDUM No. 4 DATED AUGUST 18, 2016**

SUMMARY OF QUANTITIES

Q-1

STATE OF CALIFORNIA - DEPARTMENT OF TRANSPORTATION
Caltrans 03-DESIGN
FUNCTIONAL SUPERVISOR ALI KIANI
CALCULATED-DESIGNED BY NASIM HASAN
CHECKED BY SATISH PRAKASH
REVISED BY
DATE REVISED

LAST REVISION 00-00-00
DATE PLOTTED => 17-AUG-2016
TIME PLOTTED => 13:23

Dist	COUNTY	ROUTE	POST MILES TOTAL PROJECT	SHEET No.	TOTAL SHEETS
01	Men	101	3.8, 5.3	33	99

REGISTERED CIVIL ENGINEER 3-28-16 DATE

3-28-16
PLANS APPROVAL DATE

REGISTERED PROFESSIONAL ENGINEER NASIM HASAN No. 74083 Exp. 6-30-17 CIVIL STATE OF CALIFORNIA

THE STATE OF CALIFORNIA OR ITS OFFICERS OR AGENTS SHALL NOT BE RESPONSIBLE FOR THE ACCURACY OR COMPLETENESS OF SCANNED COPIES OF THIS PLAN SHEET.

WATER POLLUTION CONTROL

BMP	UNIT	* QUANTITY
TEMPORARY CONSTRUCTION ENTRANCE/EXIT	EA	2
TEMPORARY FIBER ROLL (6")	LF	3,820
TEMPORARY SILT FENCE	LF	355
TEMPORARY REINFORCED SILT FENCE	LF	40
TEMPORARY CHECK DAM	LF	405
TEMPORARY GRAVEL BAG BERM	LF	3,520
TEMPORARY DRAINAGE INLET PROTECTION	EA	6
TEMPORARY CLEAR WATER DIVERSION	EA	2
MOVE-IN/MOVE OUT (TEMPORARY EROSION CONTROL)	EA	4
TEMPORARY COVER	SQYD	6,040
1 RECP (JUTE MESH)	SQFT	15,885

* EXACT QUANTITIES AND LOCATIONS TO BE DETERMINED BY STROM WATER POLLUTION CONTROL PLAN

TEMPORARY FENCE 1

STATION	Q†y	UNIT	R†/L†
"G1" 262+39.09 TO "G1" 267+80.43	210	LF	R†
"G1" 340+27.50 TO "G1" 340+83.03	630		R†
TOTAL	840	LF	

BERM WALL 1

STATION	STRUCTURAL CONCRETE, RETAINING WALL	BAR REINFORCING STEEL (RETAINING WALL)	RETAINING WALL (MASONRY WALL)	(N) STRUCTURE EXCAVATION
	CY	LB	SQFT	CY
"G1" 333+12.30 TO 336+89.15	56.20	5,810.53	1889.14	105.78
TOTAL	56.20	5,810.53	1889.14	

(N) - NOT A SEPARATE PAY ITEM, FOR INFORMATION ONLY

DESTROY WELL 4

STATION	SIDE R†/L†	OFFSET	TOP OF PIPE ELEVATION	BOREHOLE TYPE	CASING TYPE AND DIAMETER	DESTROY WELL EA
"G1" 263+98.88	R†	160.71	469.32	SLOPE INCLINOMETER	2.25" METAL PVC IN METAL STOVEPIPE	1
"G1" 264+15.37	R†	188.21	474.06	PIEZOMETER	1.5" METAL PVC IN METAL STOVEPIPE	1
"G1" 264+51.78	R†	132.20	465.11	PIEZOMETER	1.5" METAL PVC IN METAL STOVEPIPE	1
"G1" 264+56.10	R†	145.64	466.66	PIEZOMETER	1.5" METAL PVC IN METAL STOVEPIPE	1
"G1" 264+93.22	R†	131.32	463.93	PIEZOMETER	1.5" METAL PVC IN METAL STOVEPIPE	1
"G1" 264+55.67	R†	139.98	466.24	SLOPE INCLINOMETER	2.25" METAL PVC IN METAL STOVEPIPE	1
"G1" 264+95.14	R†	136.18	464.39	SLOPE INCLINOMETER	2.25" METAL PVC IN METAL STOVEPIPE	1
					TOTAL	7

TEMPORARY FENCE (TYPE ESA)

STATION	Q†y	UNIT	R†/L†
"G1" 263+96.72 TO "G1" 264+71.52	200	LF	R†
TOTAL	200	LF	

4 REPLACED PER ADDENDUM No. 4 DATED AUGUST 18, 2016

1 REPLACED PER ADDENDUM No. 1 DATED JULY 22, 2016

SUMMARY OF QUANTITIES

Q-2

STATE OF CALIFORNIA - DEPARTMENT OF TRANSPORTATION
Caltrans 03-DESIGN
FUNCTIONAL SUPERVISOR ALI KIANI
CALCULATED-DESIGNED BY NASIM HASAN
CHECKED BY
REVISED BY
DATE REVISED

LAST REVISION 00-00-00 DATE PLOTTED => 17-AUG-2016 TIME PLOTTED => 13:23