Dist	COUNTY	ROUTE	POST MILES TOTAL PROJECT	SHEET No.	TOTAL SHEETS
01	Hum	101	111.3 / 111.7	1	83

ACNH-ER-19D3(004)E

STATE OF CALIFORNIA
DEPARTMENT OF TRANSPORTATION

PROJECT PLANS FOR CONSTRUCTION ON
STATE HIGHWAY
IN HUMBOLDT COUNTY
NEAR BIG LAGOON
FROM 1.8 MILES TO 2.2 MILES
NORTH OF GEORGIA PACIFIC ROAD

TO BE SUPPLEMENTED BY STANDARD PLANS DATED MAY 2010

INDEX OF PLANS

SHEET No	DESCRIPTION
1	TITLE AND LOCATION MAP
2	TYPICAL CROSS SECTIONS
3-6	LAYOUTS
7-8	PROFILE AND SUPERELEVATION DIAGRAM
9	CONSTRUCTION DETAILS
10-11	DRAINAGE PROFILE
12	DRAINAGE DETAILS AND QUANTITIES
13	CONSTRUCTION AREA SIGNS
14-16	TRAFFIC HANDLING PLAN
17	TRAFFIC HANDLING QUANTITIES
18	PAVEMENT DELINEATION QUANTITIES
19	SUMMARY OF QUANTITIES
20	PLANT PLAN AND QUANTITIES
21-25	TEMPORARY SIGNAL SYSTEM
26-59	REVISED STANDARD PLANS

STRUCTURE PLANS

60-66	ANCHORED BUTTRESS WALL No. 11
67-73	ANCHORED BUTTRESS WALL No. 12
74-83	SOLDIER PILE WALL No. 14

THE STANDARD PLANS LIST APPLICABLE TO THIS CONTRACT IS INCLUDED IN THE NOTICE TO BIDDERS AND SPECIAL PROVISIONS BOOK.

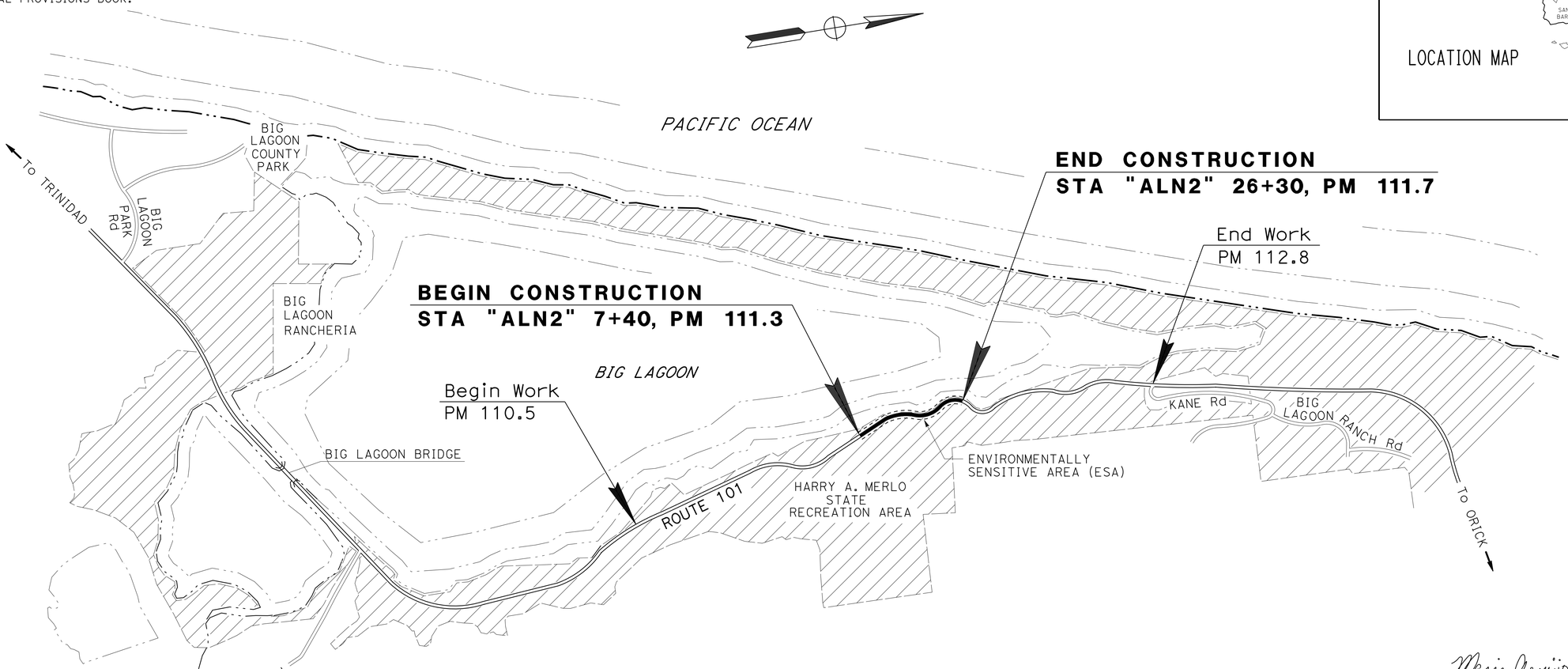

LOCATION MAP

NO SCALE

THE CONTRACTOR SHALL POSSESS THE CLASS (OR CLASSES) OF LICENSE AS SPECIFIED IN THE "NOTICE TO BIDDERS."

Marie Armijo Brady 06-15-16
PROJECT ENGINEER DATE
REGISTERED CIVIL ENGINEER

June 20, 2016
PLANS APPROVAL DATE

REGISTERED PROFESSIONAL ENGINEER
Marie A. Brady
No. 59387
Exp. 12-31-17
CIVIL
STATE OF CALIFORNIA

THE STATE OF CALIFORNIA OR ITS OFFICERS OR AGENTS SHALL NOT BE RESPONSIBLE FOR THE ACCURACY OR COMPLETENESS OF SCANNED COPIES OF THIS PLAN SHEET.

CONTRACT No.	01-0B4304
PROJECT ID	0112000127

P:\PROJ\01\0B430\drafting\sheets\0112000127ab001.dgn

DESIGN ENGINEER: KELLY B. TIMMONS
PROJECT MANAGER: TROY ARSENEAU

LAST REVISION 06-15-16
DATE PLOTTED => 26-JUL-2016
TIME PLOTTED => 09:46

Dist	COUNTY	ROUTE	POST MILES TOTAL PROJECT	SHEET No.	TOTAL SHEETS
01	Hum	101	111.3/111.7	2	83

Marie Armijo Brady 06-15-16
REGISTERED CIVIL ENGINEER DATE

June 20, 2016
PLANS APPROVAL DATE

REGISTERED PROFESSIONAL ENGINEER Marie A. Brady No. 59387 Exp. 12/13/17 CIVIL STATE OF CALIFORNIA

THE STATE OF CALIFORNIA OR ITS OFFICERS OR AGENTS SHALL NOT BE RESPONSIBLE FOR THE ACCURACY OR COMPLETENESS OF SCANNED COPIES OF THIS PLAN SHEET.

NOTES:

1. DIMENSIONS OF THE PAVEMENT STRUCTURES (STRUCTURAL SECTIONS) ARE SUBJECT TO TOLERANCES SPECIFIED IN THE STANDARD SPECIFICATIONS.
2. SUPERELEVATIONS ARE SHOWN ON THE SUPERELEVATION DIAGRAMS.
3. FOR LOCATIONS OF HMA DIKE TYPES "A" & "E", SEE SHEETS L-1, L-2 AND Q-1.
4. FOR LOCATION OF COLD PLANE LIMITS, SEE SHEETS L-1 AND L-2.
5. SELECTED MATERIAL CONSISTS OF APPROXIMATELY THE TOP 24" OF EXCAVATED MATERIAL.
6. FOR GPI DETAILS SEE SHEET C-1.

ABBREVIATIONS:

TE = TAPERED EDGE

DESIGN DESIGNATION

ADT (2016)	4,140	D	60%
ADT (2036)	4,380	T	10%
DHV	555	V	40 mph
ESAL	1,575,510	TI_{20}	9.5

PAVEMENT CLIMATE REGION: NORTH COAST

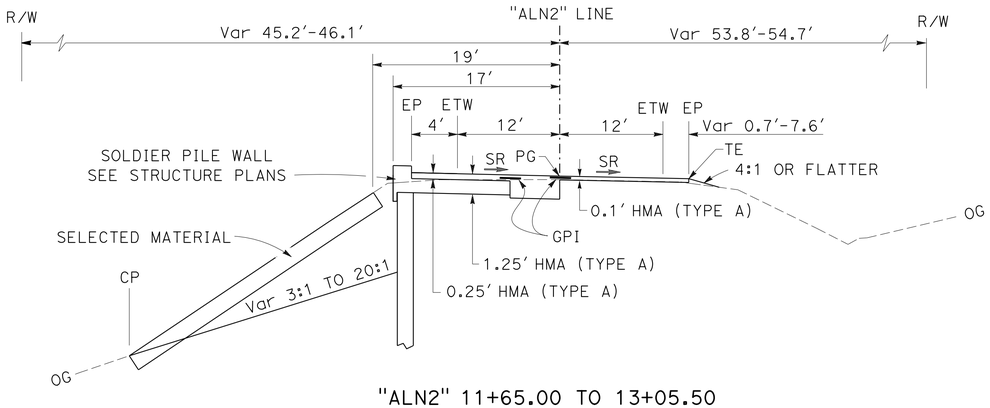

"ALN2" 11+65.00 TO 13+05.50

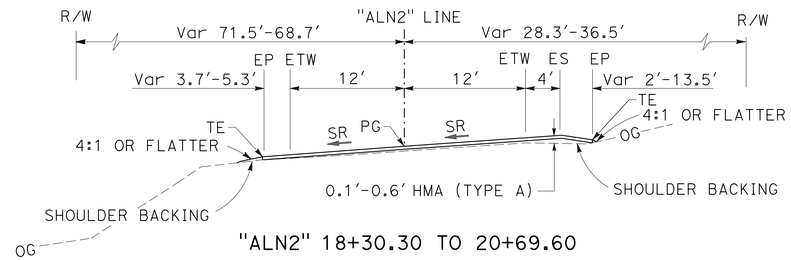

"ALN2" 18+30.30 TO 20+69.60

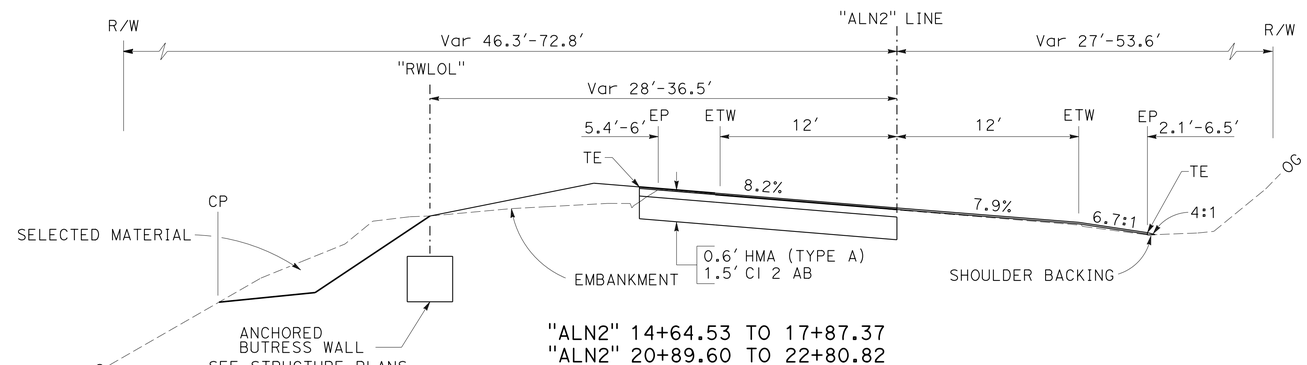

"ALN2" 14+64.53 TO 17+87.37
"ALN2" 20+89.60 TO 22+80.82

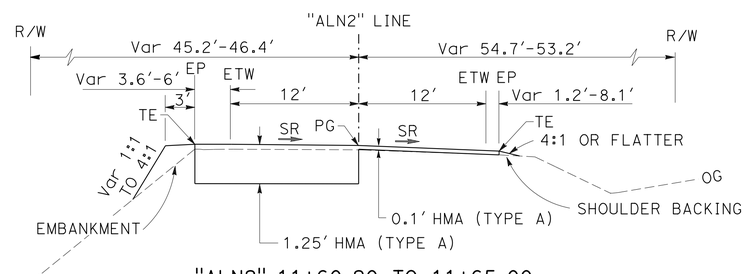

"ALN2" 11+60.20 TO 11+65.00
"ALN2" 13+05.50 TO 13+55.70

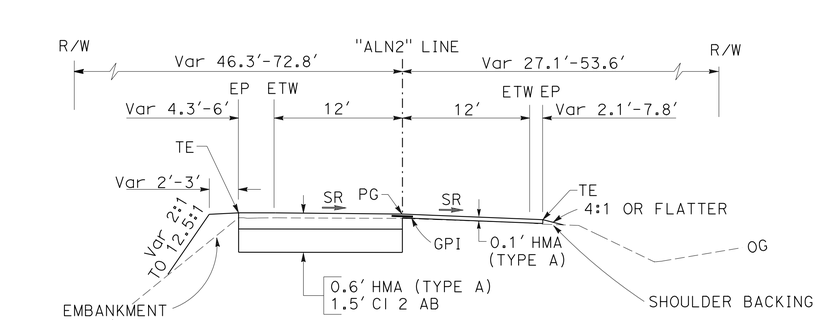

"ALN2" 13+55.70 TO 14+64.53
"ALN2" 17+87.37 TO 18+30.30
"ALN2" 20+69.60 TO 20+89.60
"ALN2" 22+80.82 TO 23+13.60

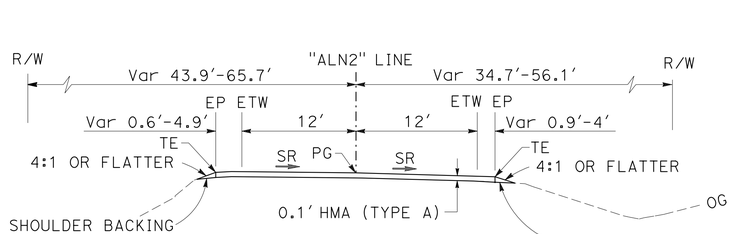

"ALN2" 7+40.00 TO 11+60.20
"ALN2" 23+13.60 TO 26+30.00

ROUTE 101

TYPICAL CROSS SECTIONS

NO SCALE

X-1

REVISED BY | DATE REVISED
MARIE A. BRADY | GINNY SEIBERT
CALCULATED-DESIGNED BY | CHECKED BY
FUNCTIONAL SUPERVISOR | KELLY B. TIMMONS

STATE OF CALIFORNIA - DEPARTMENT OF TRANSPORTATION
Caltrans
DESIGN

P:\PROJ\01\0B430\drafting\sheets\0112000127ca001.dgn

LAST REVISION 06-15-16 | DATE PLOTTED => 26-JUL-2016 | TIME PLOTTED => 09:46

Dist	COUNTY	ROUTE	POST MILES TOTAL PROJECT	SHEET No.	TOTAL SHEETS
01	Hum	101	111.3/111.7	3	83

Marie Armijo Brady 06-15-16
REGISTERED CIVIL ENGINEER DATE

June 20, 2016
PLANS APPROVAL DATE

REGISTERED PROFESSIONAL ENGINEER Marie A. Brady No. 59387 Exp. 12/13/17 CIVIL STATE OF CALIFORNIA

THE STATE OF CALIFORNIA OR ITS OFFICERS OR AGENTS SHALL NOT BE RESPONSIBLE FOR THE ACCURACY OR COMPLETENESS OF SCANNED COPIES OF THIS PLAN SHEET.

NOTE:

FOR ACCURATE RIGHT OF WAY DATA, CONTACT RIGHT OF WAY ENGINEERING AT THE DISTRICT OFFICE.

CURVE DATA

No.	R	Δ	T	L
1	700′	12°30′45"	76.74′	152.87′

LEGEND

CRASH CUSHION — CRASH CUSHION (TYPE TRACC)

ENVIRONMENTALLY SENSITIVE AREA

LOCATION OF TREES FOR SPECIES PROTECTION AREA

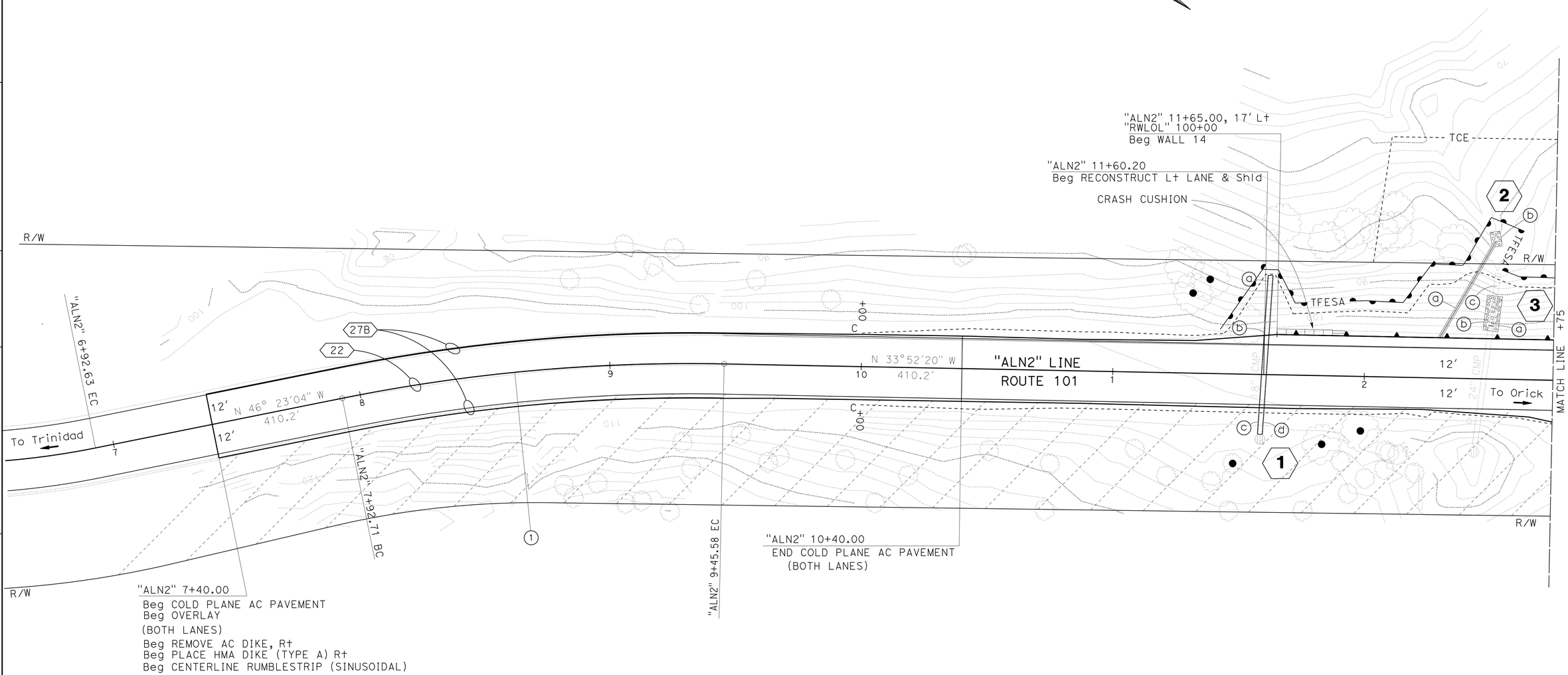

LAYOUT

SCALE: 1" = 20′

L-1

REVISED BY | DATE REVISED
MARIE A. BRADY | GINNY SEIBERT
CALCULATED-DESIGNED BY | CHECKED BY
FUNCTIONAL SUPERVISOR | KELLY B. TIMMONS

STATE OF CALIFORNIA - DEPARTMENT OF TRANSPORTATION
Caltrans
DESIGN

P:\PROJ\01\0B430\drafting\sheets\0112000127ea001.dgn

LAST REVISION 06-15-16 | DATE PLOTTED => 26-JUL-2016 | TIME PLOTTED => 09:46

BORDER LAST REVISED 7/2/2010 | USERNAME => s132662 | DGN FILE => 0112000127ea001.dgn | RELATIVE BORDER SCALE IS IN INCHES 0 1 2 3 | UNIT 0312 | PROJECT NUMBER & PHASE 01120001271

Dist	COUNTY	ROUTE	POST MILES TOTAL PROJECT	SHEET No.	TOTAL SHEETS
01	Hum	101	111.3/111.7	4	83

REGISTERED CIVIL ENGINEER — DATE 06-15-16

June 20, 2016
PLANS APPROVAL DATE

REGISTERED PROFESSIONAL ENGINEER — Marie A. Brady No. 59387 Exp. 12/13/17 CIVIL — STATE OF CALIFORNIA

THE STATE OF CALIFORNIA OR ITS OFFICERS OR AGENTS SHALL NOT BE RESPONSIBLE FOR THE ACCURACY OR COMPLETENESS OF SCANNED COPIES OF THIS PLAN SHEET.

CURVE DATA

No.	R	Δ	T	L
2	600′	23°41′40"	125.86′	248.13′
3	600′	12°23′43"	65.16′	129.80′

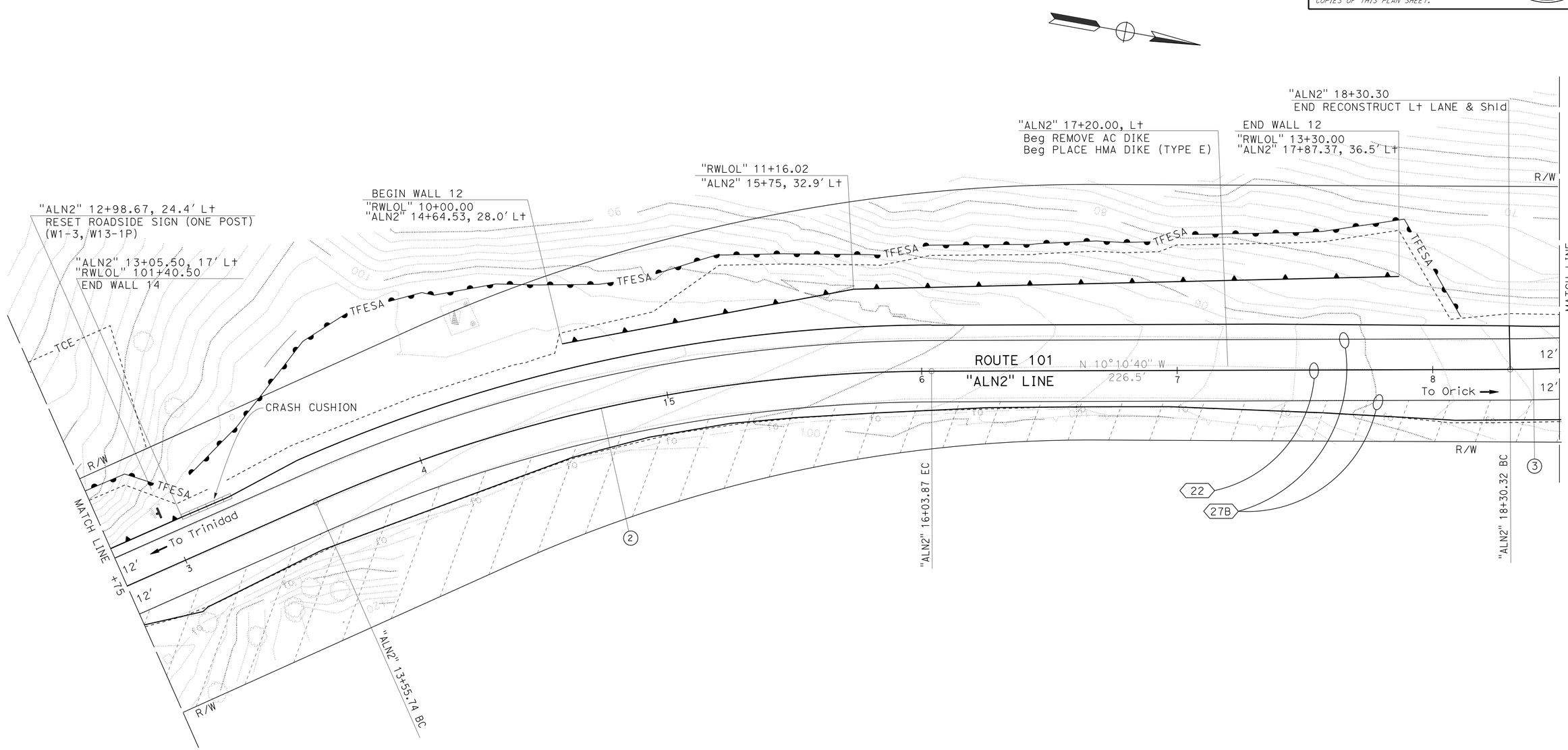

LAYOUT

SCALE: 1" = 20′

L-2

STATE OF CALIFORNIA - DEPARTMENT OF TRANSPORTATION
Caltrans® DESIGN

FUNCTIONAL SUPERVISOR: KELLY B. TIMMONS
CALCULATED-DESIGNED BY: MARIE A. BRADY
CHECKED BY: GINNY SEIBERT
REVISED BY / DATE REVISED

P:\PROJ\01\0B430\drafting\sheets\0112000127ea002.dgn

LAST REVISION 06-15-16 | DATE PLOTTED => 26-JUL-2016 | TIME PLOTTED => 09:47

BORDER LAST REVISED 7/2/2010 | USERNAME => s132662 | DGN FILE => 0112000127ea002.dgn | RELATIVE BORDER SCALE IS IN INCHES 0 1 2 3 | UNIT 0312 | PROJECT NUMBER & PHASE 01120001271

Dist	COUNTY	ROUTE	POST MILES TOTAL PROJECT	SHEET No.	TOTAL SHEETS
01	Hum	101	111.3/111.7	5	83

Marie Armijo Brady 06-15-16
REGISTERED CIVIL ENGINEER DATE

June 20, 2016
PLANS APPROVAL DATE

REGISTERED PROFESSIONAL ENGINEER Marie A. Brady No. 59387 Exp. 12/13/17 CIVIL STATE OF CALIFORNIA

THE STATE OF CALIFORNIA OR ITS OFFICERS OR AGENTS SHALL NOT BE RESPONSIBLE FOR THE ACCURACY OR COMPLETENESS OF SCANNED COPIES OF THIS PLAN SHEET.

CURVE DATA

No.	R	Δ	T	L
3	600′	12°23′43″	65.16′	129.80′
4	585′	42°53′46″	229.82′	437.97′

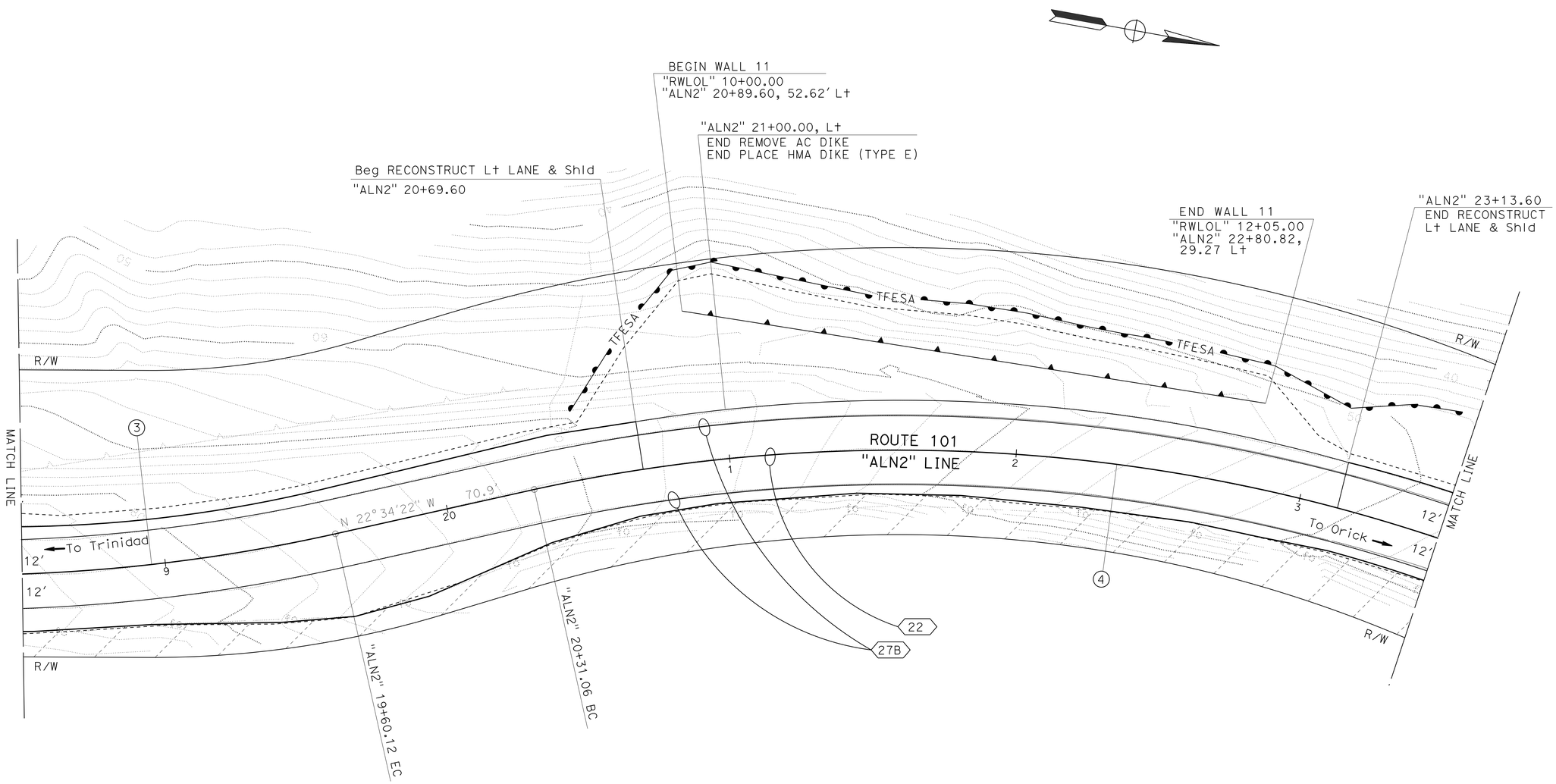

LAYOUT

SCALE: 1" = 20′

L-3

REVISED BY	DATE REVISED
MARIE A. BRADY	GINNY SEIBERT
CALCULATED-DESIGNED BY	CHECKED BY
FUNCTIONAL SUPERVISOR	KELLY B. TIMMONS

STATE OF CALIFORNIA - DEPARTMENT OF TRANSPORTATION
Caltrans
DESIGN

P:\PROJ\01\0B430\drafting\sheets\0112000127ea003.dgn

LAST REVISION 06-15-16
DATE PLOTTED => 26-JUL-2016
TIME PLOTTED => 09:47

Dist	COUNTY	ROUTE	POST MILES TOTAL PROJECT	SHEET No.	TOTAL SHEETS
01	Hum	101	111.3/111.7	6	83

Marie Armijo Brady 06-15-16
REGISTERED CIVIL ENGINEER DATE

June 20, 2016
PLANS APPROVAL DATE

REGISTERED PROFESSIONAL ENGINEER Marie A. Brady No. 59387 Exp. 12/13/17 CIVIL STATE OF CALIFORNIA

THE STATE OF CALIFORNIA OR ITS OFFICERS OR AGENTS SHALL NOT BE RESPONSIBLE FOR THE ACCURACY OR COMPLETENESS OF SCANNED COPIES OF THIS PLAN SHEET.

CURVE DATA

No.	R	Δ	T	L
4	585′	42°53′46″	229.82′	437.97′

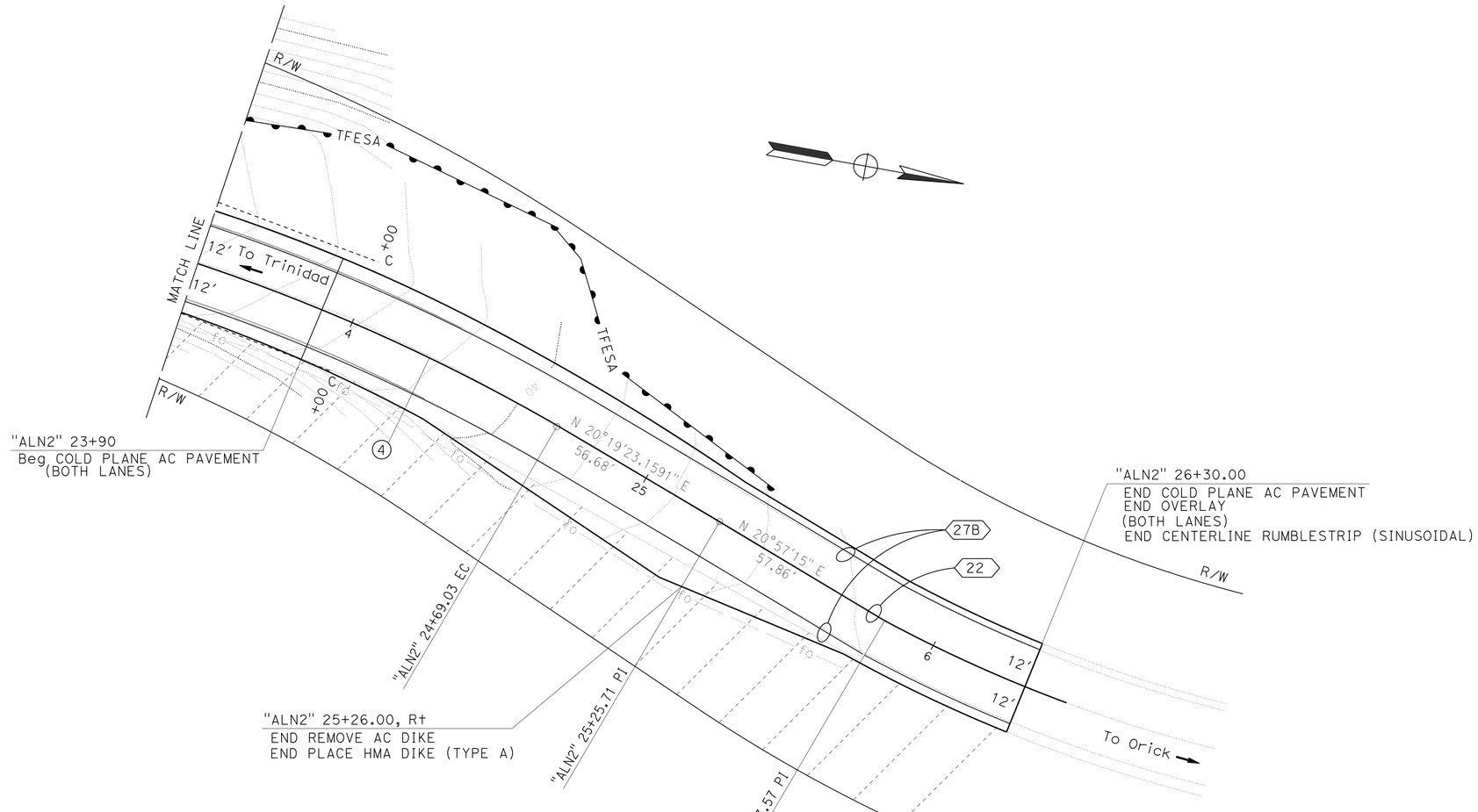

LAYOUT

SCALE: 1" = 20′

L-4

REVISED BY	DATE REVISED

CALCULATED-DESIGNED BY	CHECKED BY
MARIE A. BRADY	GINNY SEIBERT

FUNCTIONAL SUPERVISOR: KELLY B. TIMMONS

STATE OF CALIFORNIA - DEPARTMENT OF TRANSPORTATION
Caltrans
DESIGN

P:\PROJ\01\0B430\drafting\sheets\0112000127ea004.dgn

LAST REVISION 06-15-16 | DATE PLOTTED => 26-JUL-2016 | TIME PLOTTED => 09:47

Dist	COUNTY	ROUTE	POST MILES TOTAL PROJECT	SHEET No.	TOTAL SHEETS
01	Hum	101	111.3/111.7	7	83

Marie Armijo Brady 06-15-16
REGISTERED CIVIL ENGINEER DATE

June 20, 2016
PLANS APPROVAL DATE

REGISTERED PROFESSIONAL ENGINEER Marie A. Brady No. 59387 Exp. 12/13/17 CIVIL STATE OF CALIFORNIA

THE STATE OF CALIFORNIA OR ITS OFFICERS OR AGENTS SHALL NOT BE RESPONSIBLE FOR THE ACCURACY OR COMPLETENESS OF SCANNED COPIES OF THIS PLAN SHEET.

NOTE:
ALL ELEVATIONS ARE BASED ON NAVD 1988.

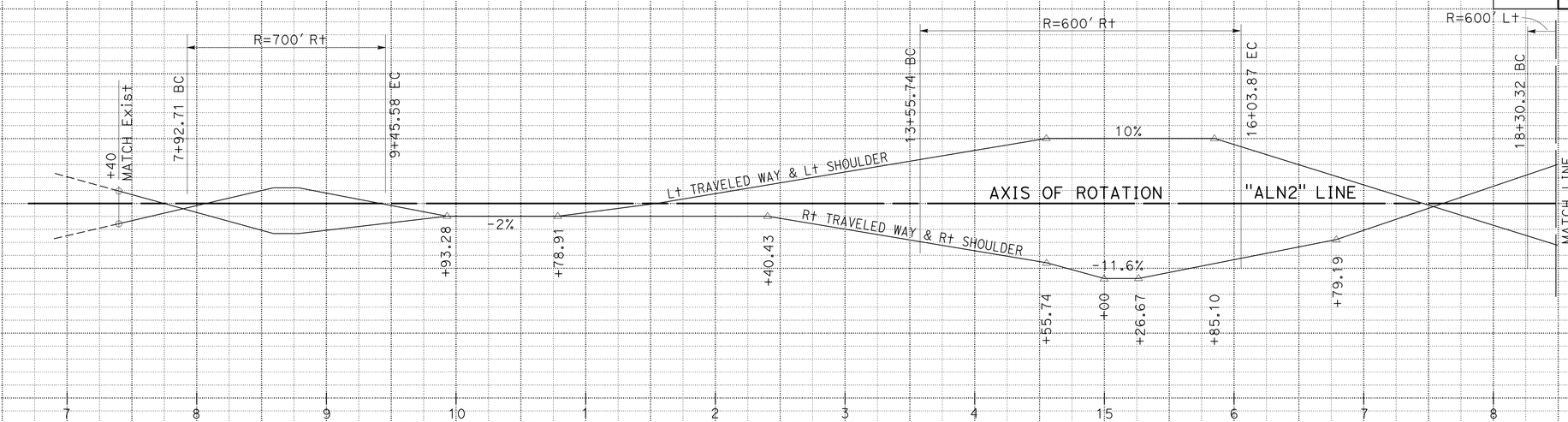

SUPERELEVATION DIAGRAM

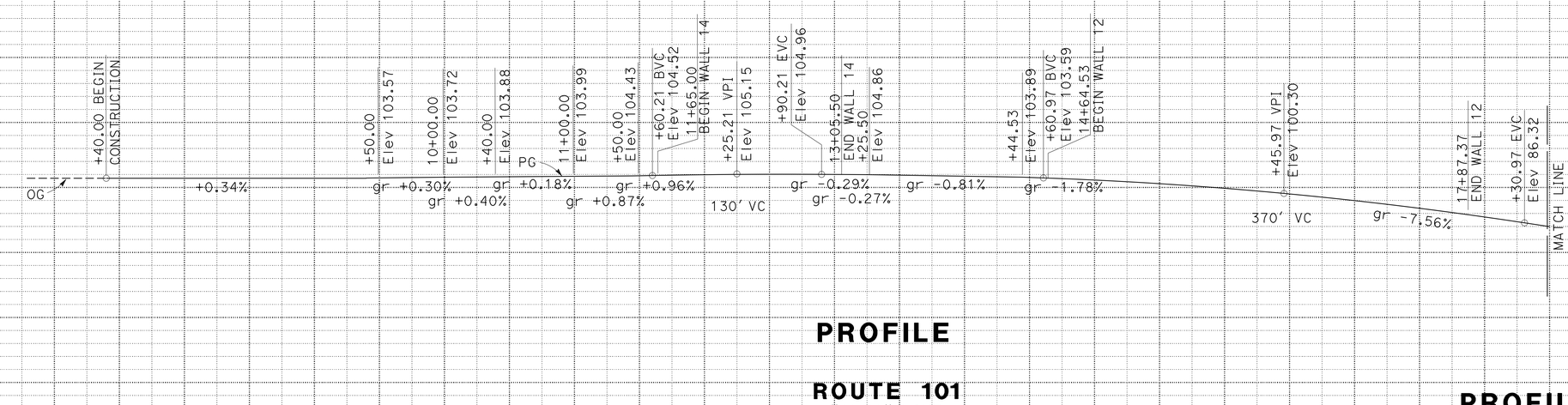

PROFILE

ROUTE 101
"ALN2" LINE

PROFILE AND SUPERELEVATION DIAGRAM

SCALE: 1" = 50' Horiz
1" = 25' Vert

PS-1

STATION	7	8	9	10	1	2	3	4	15	6	7	8	TOTAL
CY Exc													857
CY Emb							333						333

REVISED BY | DATE REVISED
MARIE A. BRADY | GINNY SEIBERT
CALCULATED-DESIGNED BY | CHECKED BY
FUNCTIONAL SUPERVISOR: KELLY B. TIMMONS

STATE OF CALIFORNIA - DEPARTMENT OF TRANSPORTATION
Caltrans® DESIGN

P:\PROJ\01\0B430\drafting\sheets\01120001271fb001.dgn

LAST REVISION 06-15-16 | DATE PLOTTED => 26-JUL-2016 | TIME PLOTTED => 09:47

Dist	COUNTY	ROUTE	POST MILES TOTAL PROJECT	SHEET No.	TOTAL SHEETS
01	Hum	101	111.3/111.7	8	83

Marie Armijo Brady 06-15-16
REGISTERED CIVIL ENGINEER DATE

June 20, 2016
PLANS APPROVAL DATE

REGISTERED PROFESSIONAL ENGINEER Marie A. Brady No. 59387 Exp. 12/13/17 CIVIL STATE OF CALIFORNIA

THE STATE OF CALIFORNIA OR ITS OFFICERS OR AGENTS SHALL NOT BE RESPONSIBLE FOR THE ACCURACY OR COMPLETENESS OF SCANNED COPIES OF THIS PLAN SHEET.

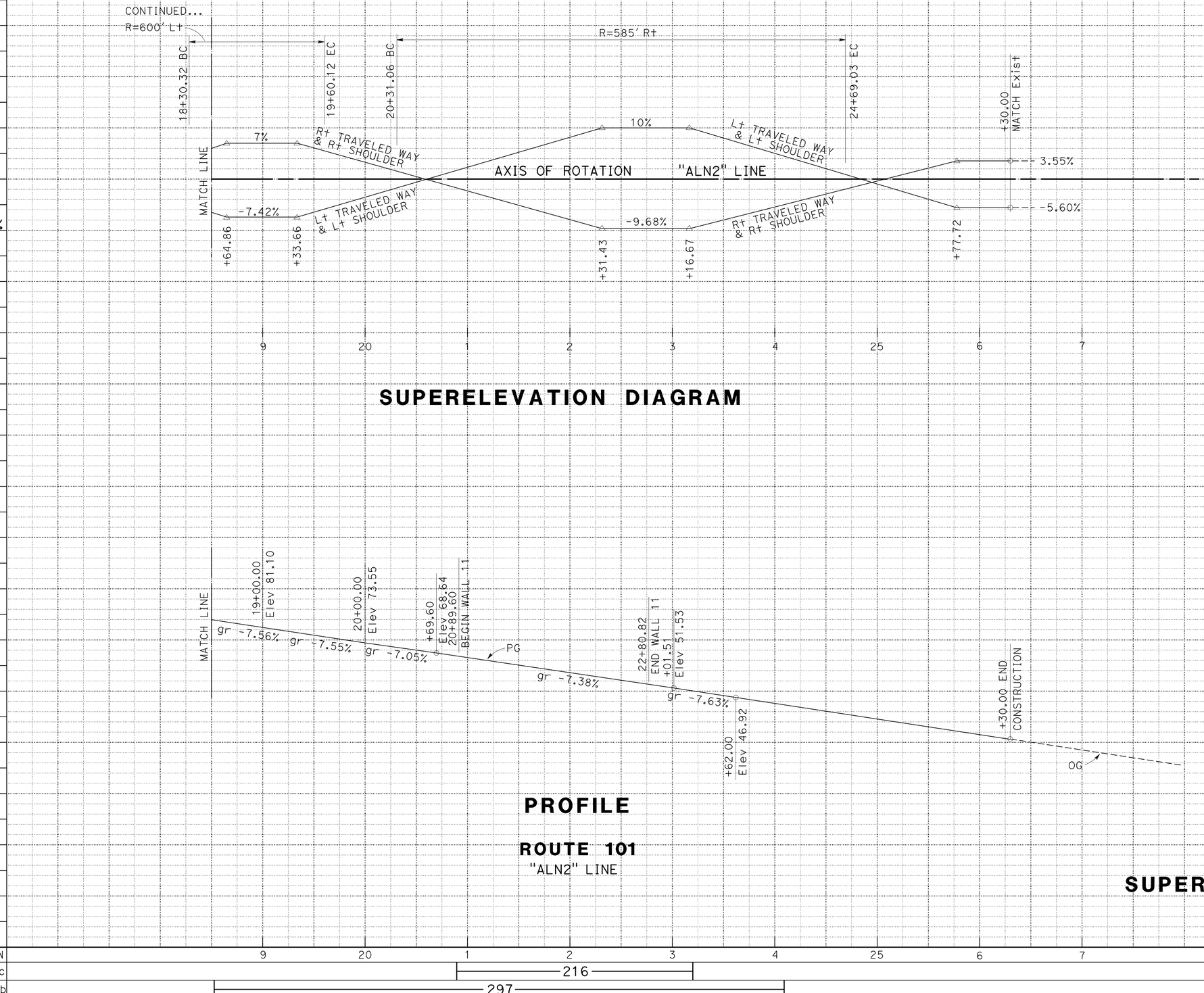

PROFILE AND SUPERELEVATION DIAGRAM

SCALE: 1" = 50' Horiz
1" = 25' Vert

PS-2

STATION		9	20	1	2	3	4	25	6	7	TOTAL
CY	Exc			216							216
	Emb		297								297

MARIE A. BRADY — GINNY SEIBERT — REVISED BY — DATE REVISED
CALCULATED-DESIGNED BY — CHECKED BY
FUNCTIONAL SUPERVISOR — KELLY B. TIMMONS
STATE OF CALIFORNIA - DEPARTMENT OF TRANSPORTATION — DESIGN
P:\PROJ\01\0B430\drafting\sheets\01120001271fb002.dgn
LAST REVISION 06-15-16 — DATE PLOTTED => 26-JUL-2016 — TIME PLOTTED => 09:47

Dist	COUNTY	ROUTE	POST MILES TOTAL PROJECT	SHEET No.	TOTAL SHEETS
01	Hum	101	111.3/111.7	9	83

REGISTERED CIVIL ENGINEER 06-15-16 DATE

June 20, 2016
PLANS APPROVAL DATE

REGISTERED PROFESSIONAL ENGINEER Marie A. Brady No. 59387 Exp. 12/13/17 CIVIL STATE OF CALIFORNIA

THE STATE OF CALIFORNIA OR ITS OFFICERS OR AGENTS SHALL NOT BE RESPONSIBLE FOR THE ACCURACY OR COMPLETENESS OF SCANNED COPIES OF THIS PLAN SHEET.

NOTES:

1. GRIND EXISTING SURFACES TO ACCOMODATE A MINIMUM TAPER THICKNESS OF 0.10′ WHEN TEMPORARY TAPER WILL BE IN PLACE FOR MORE THAN 14 DAYS.
2. PERMANENT SURFACE MAY BE EXISTING OR NEW PAVEMENT.
3. ROADWAY SURFACE IS THE TOP OF EXISTING SURFACE OR THE TOP OF THE PLANED SURFACE.

LEGEND:

- HMA MATERIAL (TEMPORARY TAPER)
- IF NECESSARY, COLD PLANE ASPHALT CONCRETE PAVEMENT AND PLACE HMA MATERIAL (SEE NOTE 1)
- DIRECTION OF TRAFFIC
- PAVEMENT MARKER (RETRO-REFLECTIVE)

Vert	SLOPE RATIO Horiz/Vert
0-0.10′	70:1
GREATER THAN 0.10′	160:1

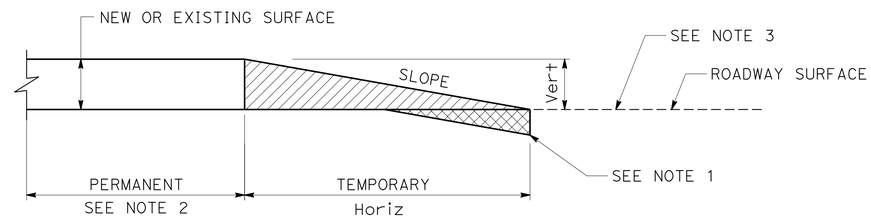

TEMPORARY HMA TAPER

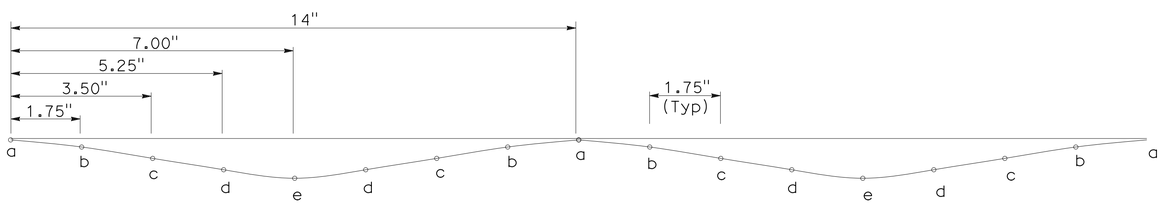

ELEVATION

PATENT PENDING
No. 14451638

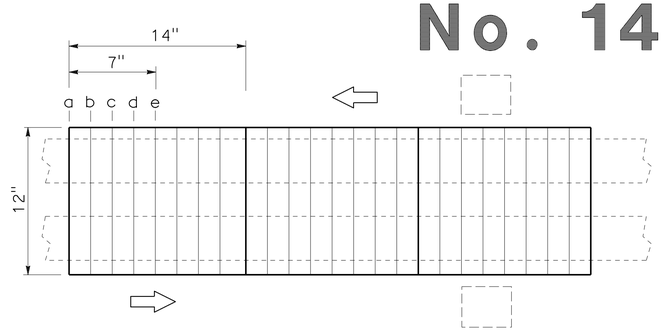

PLAN VIEW

LOCATION	CENTERLINE DEPTH INCHES
a	0
b	1/8
c	5/16
d	9/16
e	5/8

NO MEDIAN - DETAIL 22

CENTERLINE RUMBLE STRIP (SINUSOIDAL)

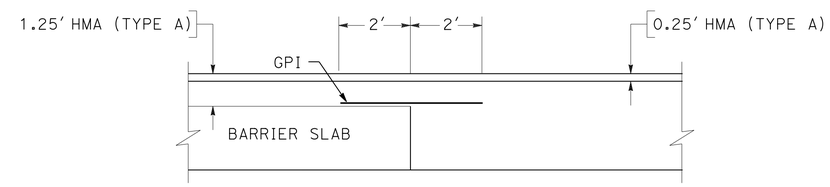

AT CONCRETE BARRIER SLAB

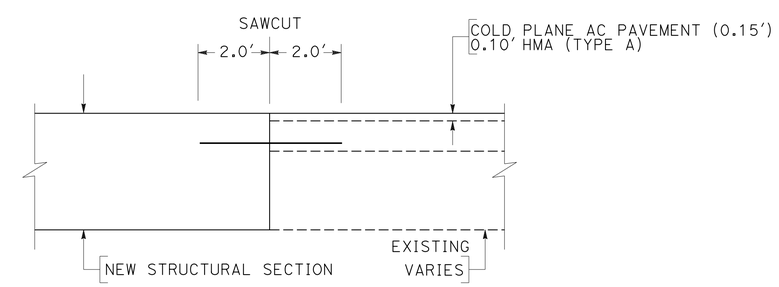

AT EXISTING PAVEMENT

GEOSYNTHETIC PAVEMENT INTERLAYER

CONSTRUCTION DETAILS

NO SCALE

C-1

REVISED BY | DATE REVISED
MARIE A. BRADY | GINNY SEIBERT
CALCULATED-DESIGNED BY | CHECKED BY
FUNCTIONAL SUPERVISOR: KELLY B. TIMMONS
STATE OF CALIFORNIA - DEPARTMENT OF TRANSPORTATION
Caltrans
DESIGN
P:\PROJ\01\0B430\drafting\sheets\0112000127ga001.dgn

LAST REVISION 06-15-16 | DATE PLOTTED => 26-JUL-2016 | TIME PLOTTED => 09:47

Dist	COUNTY	ROUTE	POST MILES TOTAL PROJECT	SHEET No.	TOTAL SHEETS
01	Hum	101	111.3/111.7	10	83

REGISTERED CIVIL ENGINEER 06-15-16 DATE

June 20, 2016
PLANS APPROVAL DATE

REGISTERED PROFESSIONAL ENGINEER Marie A. Brady No. 59387 Exp. 12/13/17 CIVIL STATE OF CALIFORNIA

THE STATE OF CALIFORNIA OR ITS OFFICERS OR AGENTS SHALL NOT BE RESPONSIBLE FOR THE ACCURACY OR COMPLETENESS OF SCANNED COPIES OF THIS PLAN SHEET.

NOTE:
ANGLE OF ELBOW APPROXIMATE, EXACT ANGLE TO BE DETERMINED IN THE FIELD.

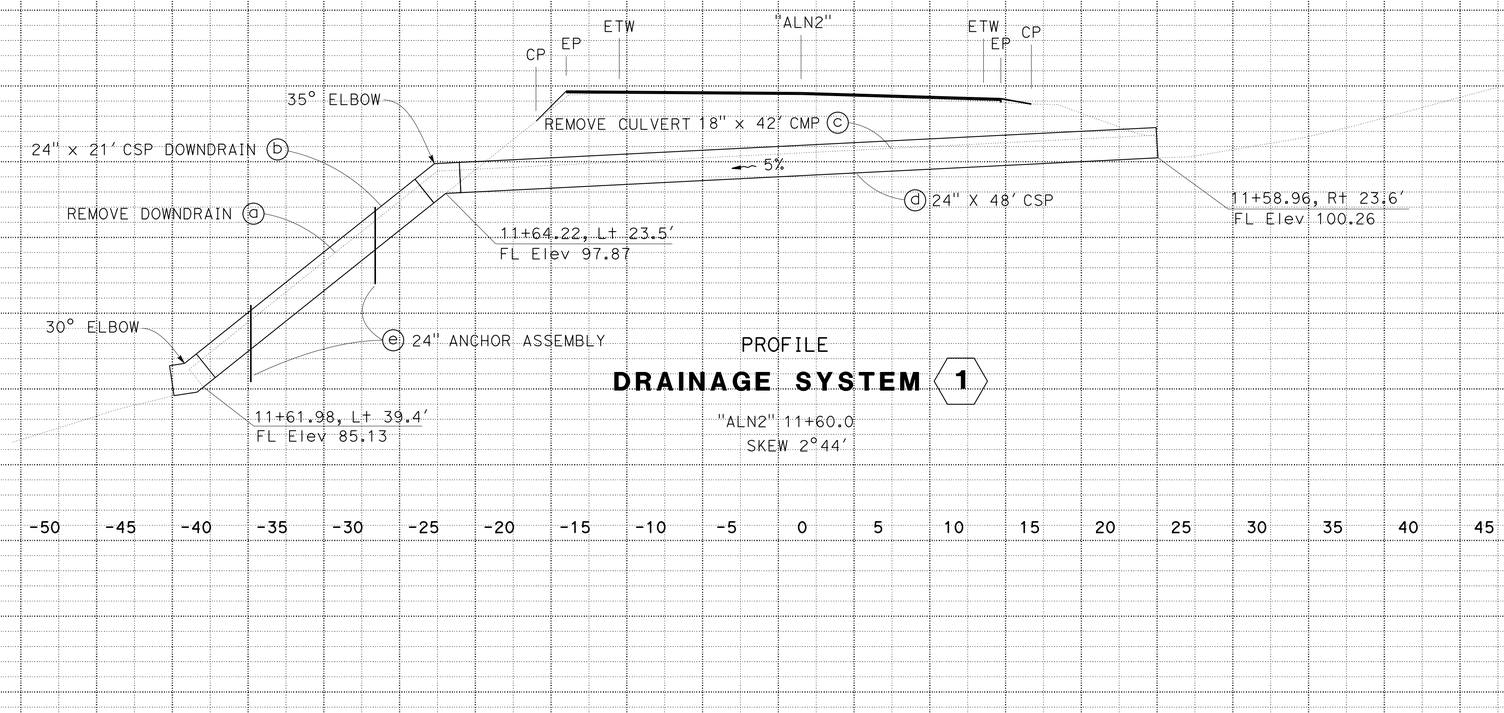

PROFILE
DRAINAGE SYSTEM 1
"ALN2" 11+60.0
SKEW 2°44'

DRAINAGE PROFILE

SCALE: 1" = 5' Horiz
1" = 5' Vert

DP-1

REVISED BY | DATE REVISED
MARIE A. BRADY | GINNY SEIBERT
CALCULATED-DESIGNED BY | CHECKED BY
FUNCTIONAL SUPERVISOR: KELLY B. TIMMONS

STATE OF CALIFORNIA - DEPARTMENT OF TRANSPORTATION
Caltrans® DESIGN

P:\PROJ\01\0B430\drafting\sheets\01120001271b001.dgn

LAST REVISION 06-15-16 | DATE PLOTTED => 26-JUL-2016 | TIME PLOTTED => 09:47

Dist	COUNTY	ROUTE	POST MILES TOTAL PROJECT	SHEET No.	TOTAL SHEETS
01	Hum	101	111.3/111.7	11	83

Marie Armijo Brady 06-15-16
REGISTERED CIVIL ENGINEER DATE

June 20, 2016
PLANS APPROVAL DATE

REGISTERED PROFESSIONAL ENGINEER Marie A. Brady No. 59387 Exp. 12/13/17 CIVIL STATE OF CALIFORNIA

THE STATE OF CALIFORNIA OR ITS OFFICERS OR AGENTS SHALL NOT BE RESPONSIBLE FOR THE ACCURACY OR COMPLETENESS OF SCANNED COPIES OF THIS PLAN SHEET.

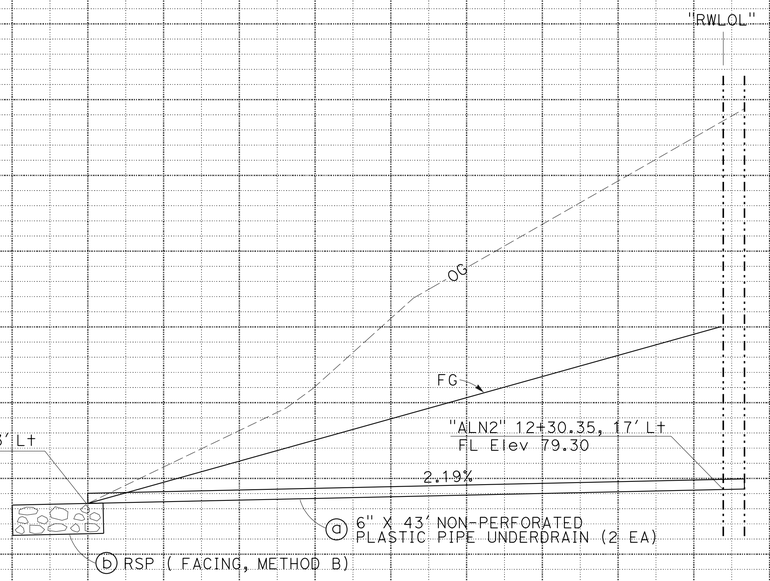

DRAINAGE SYSTEM 2
"ALN2" 11+60.89

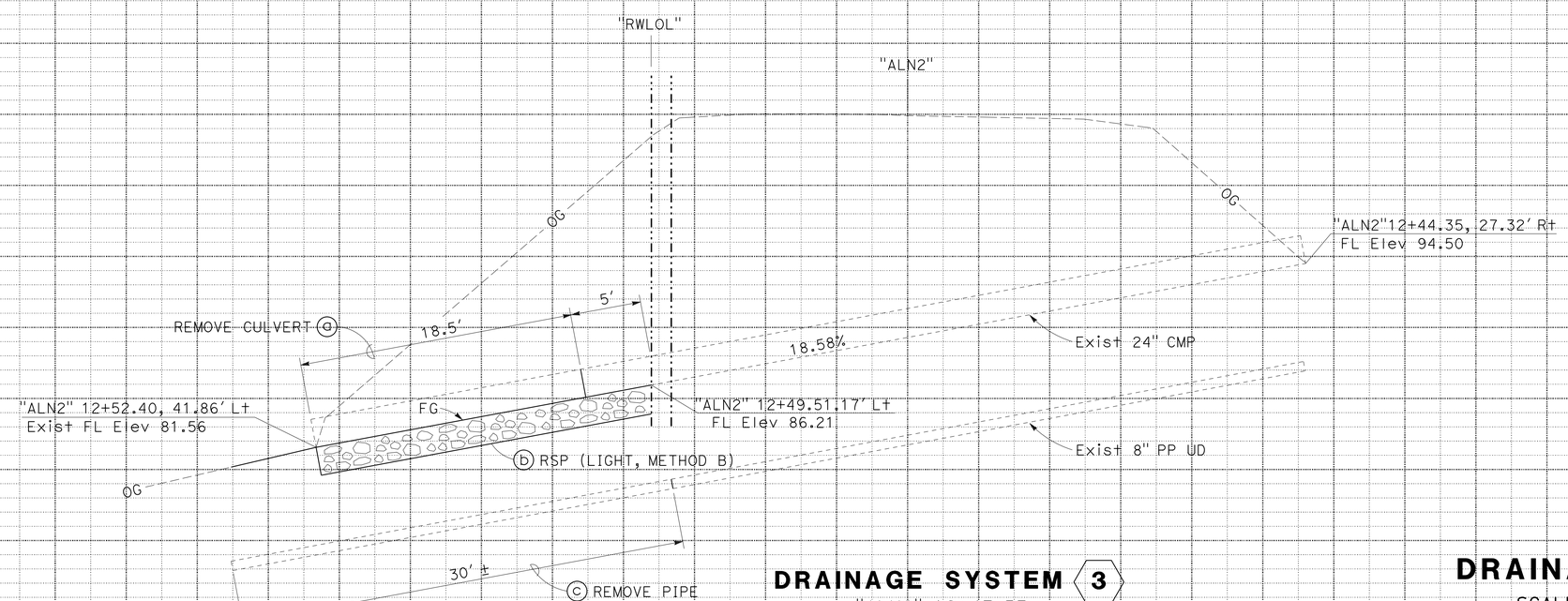

DRAINAGE SYSTEM 3
"ALN2" 12+47.53
SKEW 6°38'

DRAINAGE PROFILE
SCALE: 1" = 5' Horiz
1" = 5' Vert

DP-2

REVISED BY | DATE REVISED
MARIE A. BRADY | GINNY SEIBERT
CALCULATED-DESIGNED BY | CHECKED BY
FUNCTIONAL SUPERVISOR: KELLY B. TIMMONS

STATE OF CALIFORNIA - DEPARTMENT OF TRANSPORTATION
Caltrans® DESIGN

P:\PROJ\01\0B430\drafting\sheets\01120001271ib002.dgn

LAST REVISION | DATE PLOTTED => 26-JUL-2016 | 06-15-16 | TIME PLOTTED => 09:47

Dist	COUNTY	ROUTE	POST MILES TOTAL PROJECT	SHEET No.	TOTAL SHEETS
01	Hum	101	111.3/111.7	12	83

Marie Armijo Brady 06-15-16
REGISTERED CIVIL ENGINEER DATE

June 20, 2016
PLANS APPROVAL DATE

REGISTERED PROFESSIONAL ENGINEER Marie A. Brady No. 59387 Exp. 12/13/17 CIVIL STATE OF CALIFORNIA

THE STATE OF CALIFORNIA OR ITS OFFICERS OR AGENTS SHALL NOT BE RESPONSIBLE FOR THE ACCURACY OR COMPLETENESS OF SCANNED COPIES OF THIS PLAN SHEET.

DRAINAGE QUANTITIES

DRAINAGE SYSTEM	DRAINAGE UNIT	REMOVE CULVERT (LF)	REMOVE DOWNDRAIN (EA)	24" CSP (0.109" THICK)	24" CSP DD (0.109" THICK)	24" ELBOW (N)	6" NON PERFORATED PP UNDERDRAIN ✳	REMOVE PIPE (EA)	RSP (LIGHT, METHOD B) (CY)	RSP (FACING, METHOD B) (CY)	24" ANCHOR ASSEMBLY	RSP FABRIC (CLASS 8)	MARKER (CULVERT)	REMARKS
		LF	EA	LF	LF	EA	LF	EA	CY	CY	EA	SQYD	EA	
1	a		1											
	b				21.0	2								
	c	42.0												18" CMP
	d			48.0									2	PM 111.42
	e										2			
2	a						86							
	b									2.3		10.1		
3	a	23.5												24" CMP
	b								7.9			26.6	1	PM 111.43
	c							1						8"x30' PP
TOTAL		65.5	1	48.0	21.0	2	86	1	7.9	2.3	2	36.6	3	

(N) NOT A SEPARATE PAY ITEM. FOR INFORMATION ONLY.

✳ SEE STRUCTURES PLAN SOLDIER PILE WALL No.14 FOR ADDITIONAL QUANTITY.

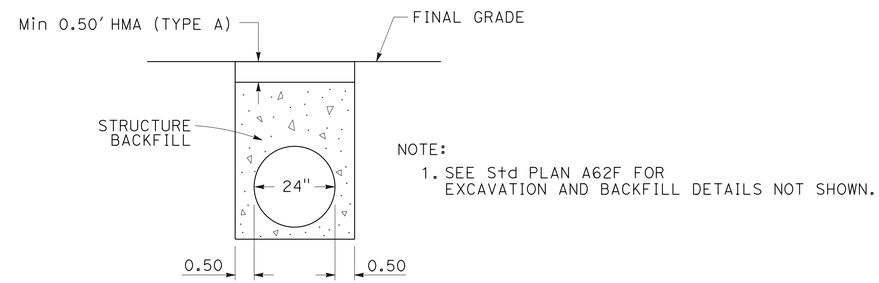

NOTE:
1. SEE Std PLAN A62F FOR EXCAVATION AND BACKFILL DETAILS NOT SHOWN.

CULVERT BACKFILL DETAIL

1

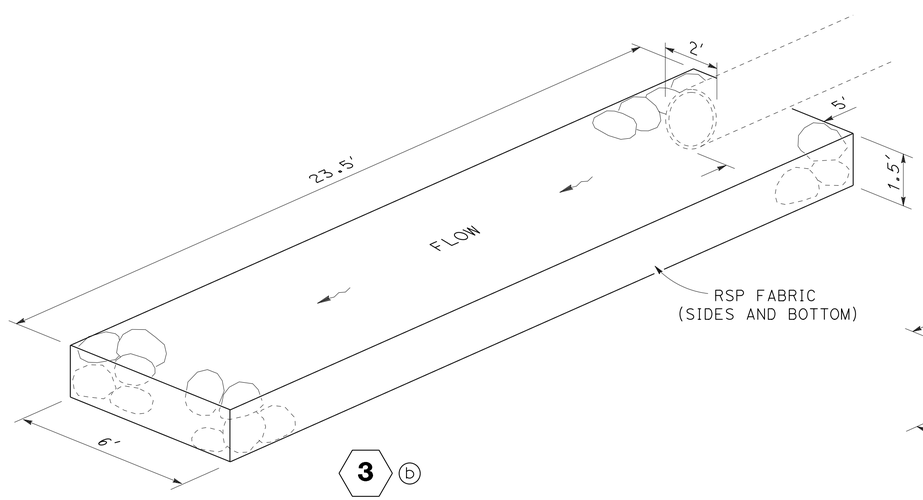

3 b

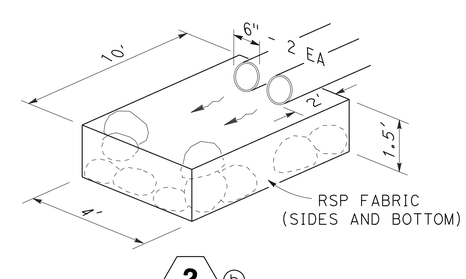

2 b

RSP DETAILS

DRAINAGE DETAILS AND QUANTITIES

NO SCALE

DD-1

MARIE A. BRADY — REVISED BY
GINNY SEIBERT — DATE REVISED
CALCULATED-DESIGNED BY
CHECKED BY
FUNCTIONAL SUPERVISOR — KELLY B. TIMMONS

STATE OF CALIFORNIA - DEPARTMENT OF TRANSPORTATION
Caltrans® DESIGN

P:\PROJ\01\0B430\drafting\sheets\01120001271c001.dgn

LAST REVISION 06-15-16 | DATE PLOTTED => 26-JUL-2016 | TIME PLOTTED => 09:47

Dist	COUNTY	ROUTE	POST MILES TOTAL PROJECT	SHEET No.	TOTAL SHEETS
01	Hum	101	111.3/111.7	13	83

Sheri M. Rodriguez 06-15-16
REGISTERED CIVIL ENGINEER DATE

June 20, 2016
PLANS APPROVAL DATE

REGISTERED PROFESSIONAL ENGINEER SHERI M. RODRIGUEZ No. C66861 Exp. 9-30-16 CIVIL STATE OF CALIFORNIA

THE STATE OF CALIFORNIA OR ITS OFFICERS OR AGENTS SHALL NOT BE RESPONSIBLE FOR THE ACCURACY OR COMPLETENESS OF SCANNED COPIES OF THIS PLAN SHEET.

1. EXACT SIGN LOCATION TO BE DETERMINED BY THE ENGINEER.
2. SEE SHEETS TH-2 & TH-3 FOR PLACEMENT OF SIGNS C, D, F, G & I.
3. SIGN B FSBT WILL REQUIRE WOOD POLE PROTECTION.
4. SIGNS B, C & D FNBT TO BE PLACED EITHER 15' FROM ETW OR BEHIND EXISTING MBGR.

(X) ROADSIDE SIGN (WITH NUMBERS)

Temp FLASHING BEACON (SEE ELECTRICAL PLANS)

STATIONARY MOUNTED CONSTRUCTION AREA SIGNS

◯	TYPE	SIGN MESSAGE	PANEL SIZE	No. OF POSTS AND SIZE	No. OF SIGNS
A	C40(CA)	TRAFFIC FINES DOUBLED IN CONSTRUCTION ZONE	108" x 42"	2 - 6" x 6"	2
B	W20-1	ROAD WORK AHEAD	36" x 36"	*	2
C	W20-4	ONE LANE ROAD AHEAD	36" x 36"	*	2
D	W3-3	SIGNAL AHEAD SYMBOL	36" x 36"	*	2
E	R4-11	BIKES MAY USE FULL LANE	30" x 30"	1 - 4" x 6"	2
F	R10-6	STOP HERE ON RED	24" x 36"	1 - 4" x 6"	2
G	W1-4	REVERSE CURVE SIGN	36" x 36"	1 - 4" x 6"	1
H	G20-2	END ROAD WORK	36" x 36"	1 - 4" x 6"	2

* PLACE SIGNS ON POLE WITH FLASHING BEACON (SEE ELECTRICAL PLANS).

BARRICADE MOUNTED CONSTRUCTION AREA SIGNS

◯	TYPE	SIGN MESSAGE	PANEL SIZE	BARRICADE TYPE	No. OF SIGNS
I	R26A(S)(CA)	NO STOPPING ANY TIME	24" x 30"	III	3

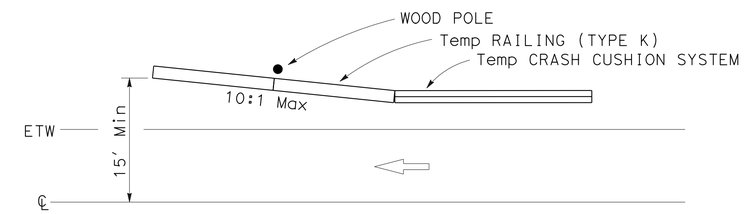

WOOD POLE PROTECTION DETAIL

(SEE NOTE 3)

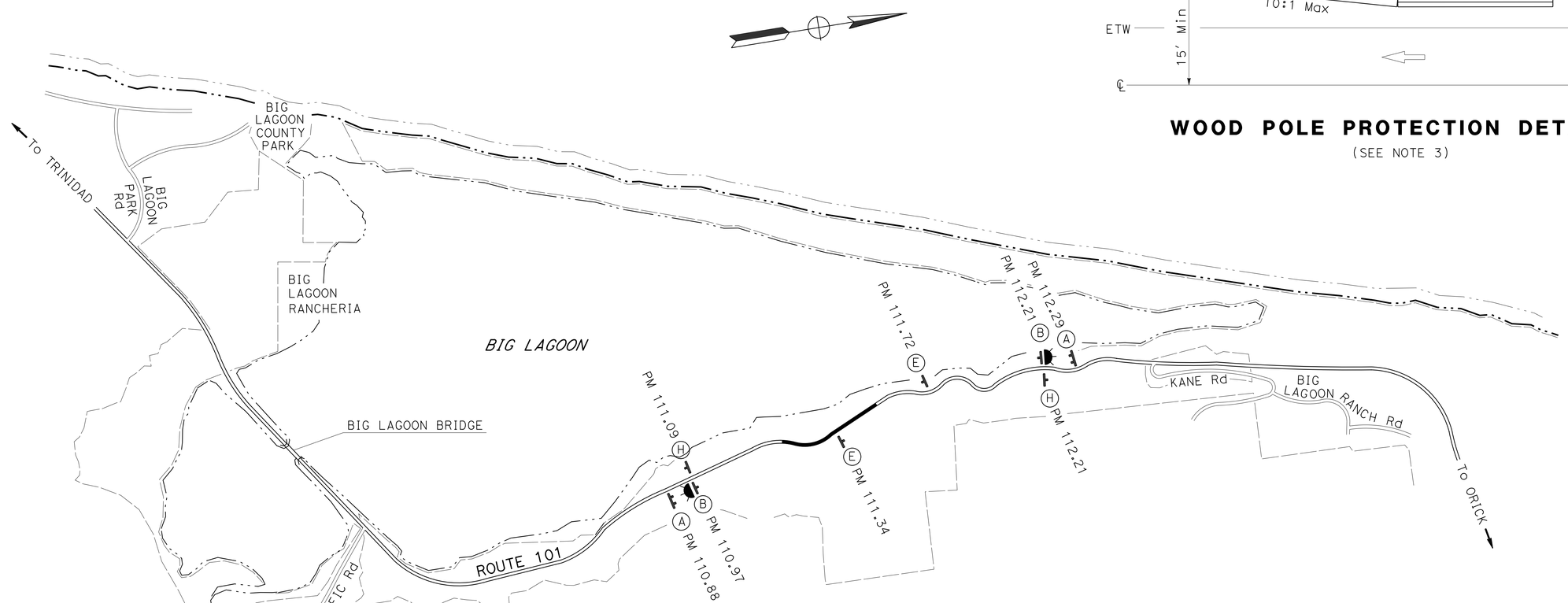

CONSTRUCTION AREA SIGNS

NO SCALE

APPROVED FOR CONSTRUCTION AREA SIGN WORK ONLY

CS-1

REVISED BY | DATE REVISED
SHERI M. RODRIGUEZ | PAUL W. HAILEY
CALCULATED-DESIGNED BY | CHECKED BY
FUNCTIONAL SUPERVISOR: KEVIN CHURCH

STATE OF CALIFORNIA - DEPARTMENT OF TRANSPORTATION
Caltrans TRAFFIC OPERATIONS

P:\PROJ\01\0B430\drafting\sheets\01120001271a001.dgn

LAST REVISION 06-15-16 | DATE PLOTTED => 26-JUL-2016 | TIME PLOTTED => 09:48

Dist	COUNTY	ROUTE	POST MILES TOTAL PROJECT	SHEET No.	TOTAL SHEETS
01	Hum	101	111.3/111.7	14	83

REGISTERED CIVIL ENGINEER — DATE 5-18-16

June 20, 2016
PLANS APPROVAL DATE

REGISTERED PROFESSIONAL ENGINEER SCOTT LEZCHUK No. C79030 Exp. 3-31-18 CIVIL STATE OF CALIFORNIA

THE STATE OF CALIFORNIA OR ITS OFFICERS OR AGENTS SHALL NOT BE RESPONSIBLE FOR THE ACCURACY OR COMPLETENESS OF SCANNED COPIES OF THIS PLAN SHEET.

NOTES:

See Revised Standard Plan T9 for tables.

Use cone spacing X for taper segment, Y for tangent segment or Z for conflict situations, as appropriate, per Table 1, unless X, Y, or Z cone spacing is shown on this sheet.

All temporary warning signs shall have black legend on fluorescent orange background.

California codes are designated by (CA). Otherwise, Federal (MUTCD) codes are shown.

TYPICAL LANE CLOSURE WITH REVERSIBLE CONTROL

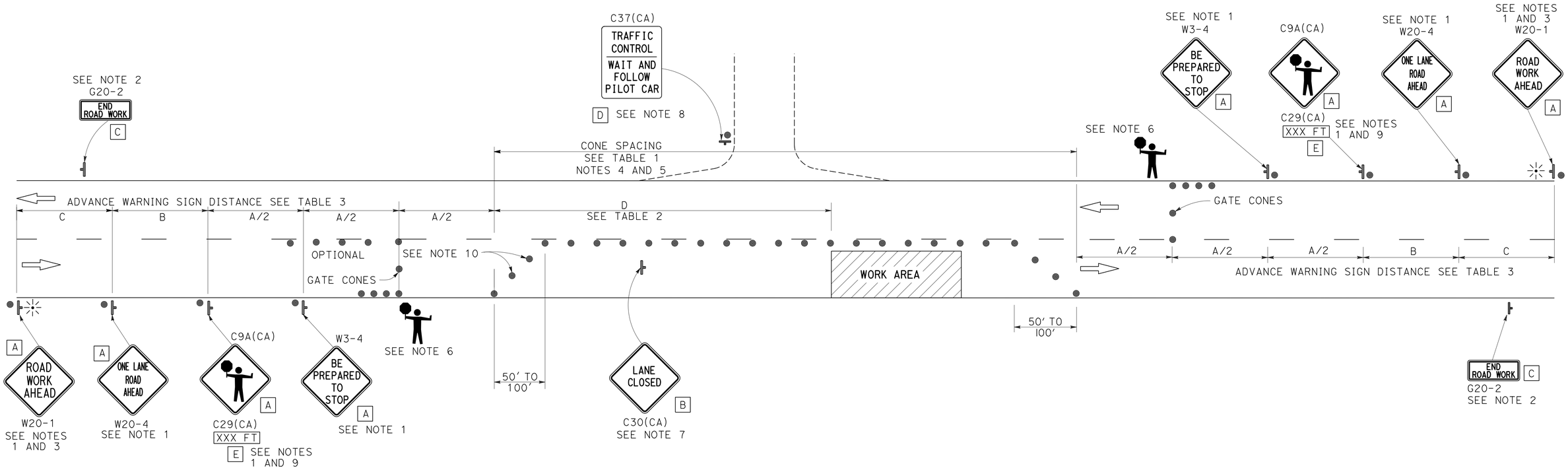

NOTES:

1. Each advance warning sign in each direction of travel shall be equipped with at least two flags for daytime closure. Each flag shall be at least 16" x 16" in size and shall be orange or fluorescent red-orange in color. Flashing beacons shall be placed at the locations indicated for lane closure during hours of darkness.
2. A G20-2 "END ROAD WORK" sign, as appropriate, shall be placed at the end of the lane control unless the end of work area is obvious, or ends within a larger project's limits.
3. If the W20-1 sign would follow within 2000' of a stationary W20-1 or G20-1 "ROAD WORK NEXT _____ MILES", use a W20-4 sign for the first advance warning sign.
4. All cones used for lane closures during the hours of darkness shall be fitted with retroreflective bands (or sleeves) as specified in the specifications.
5. Portable delineators, placed at one-half the spacing indicated for traffic cones, may be used instead of cones for daytime closures only.
6. Additional advance flaggers may be required. Flagger should stand in a conspicuous place, be visible to approaching traffic as well as approaching vehicles after the first vehicle has stopped. During the hours of darkness, the flagging-station and flagger shall be illuminated and clearly visible to approaching traffic. The illumination footprint of the lighting on the ground shall be at least 20' in diameter. Place a minimum of four cones at 50' intervals in advance of flagger station as shown.
7. Place C30(CA) "LANE CLOSED" sign at 500' to 1000' intervals throughout extended work areas. They are optional if the work area is visible from the flagger station.
8. When a pilot car is used, place a C37(CA) "TRAFFIC CONTROL-WAIT AND FOLLOW PILOT CAR" sign with black legend on white background at all intersections, driveways and alleys without a flagger within traffic control area. Signs shall be clean and visible at all times. Where traffic can not be effectively self-regulated, at least one flagger shall be used at each intersection within traffic control area.
9. An optional C29(CA) sign may be placed below the C9A(CA) sign.
10. Either traffic cones or barricades shall be placed on the taper. Barricades shall be Type I, II, or III.

SIGN PANEL SIZE (Min)

A	48" x 48"
B	30" x 30"
C	36" x 18"
D	36" x 42"
E	20" x 7"

LEGEND

- TRAFFIC CONE
- TEMPORARY TRAFFIC CONTROL SIGN
- PORTABLE FLASHING BEACON
- FLAGGER

APPROVED FOR TRAFFIC HANDLING WORK ONLY

STATE OF CALIFORNIA
DEPARTMENT OF TRANSPORTATION

TRAFFIC CONTROL SYSTEM FOR LANE CLOSURE ON TWO LANE CONVENTIONAL HIGHWAYS

NO SCALE

TH-1

REVISED BY | DATE REVISED
SCOTT LEZCHUK | PAUL HAILEY
CALCULATED-DESIGNED BY | CHECKED BY
FUNCTIONAL SUPERVISOR: KEVIN CHURCH
STATE OF CALIFORNIA - DEPARTMENT OF TRANSPORTATION
Caltrans® TRAFFIC OPERATIONS
P:\PROJ\01\0B430\drafting\sheets\01120001271md001.dgn

LAST REVISION 06-15-16 | DATE PLOTTED => 26-JUL-2016 | TIME PLOTTED => 09:48

Dist	COUNTY	ROUTE	POST MILES TOTAL PROJECT	SHEET No.	TOTAL SHEETS
01	Hum	101	111.3/111.7	15	83

Sheri M. Rodriguez 06-15-16
REGISTERED CIVIL ENGINEER DATE

June 20, 2016
PLANS APPROVAL DATE

REGISTERED PROFESSIONAL ENGINEER SHERI M. RODRIGUEZ No. C66861 Exp. 9-30-16 CIVIL STATE OF CALIFORNIA

THE STATE OF CALIFORNIA OR ITS OFFICERS OR AGENTS SHALL NOT BE RESPONSIBLE FOR THE ACCURACY OR COMPLETENESS OF SCANNED COPIES OF THIS PLAN SHEET.

NOTES:

1. THIS TRAFFIC HANDLING PLAN FOR USE DURING CONSTRUCTION OF WALLS 11 & 12 (SEE STRUCTURE PLANS).
2. SEE ELECTRICAL PLANS FOR Temp SIGNAL SYSTEM AND FLASHING BEACON DETAILS.
3. ALL PAVEMENT DELINEATION MUST BE RESTORED AFTER CONSTRUCTION OF WALLS 11 & 12. (SEE THQ-1 FOR QUANTITIES)
4. FOR CONSTRUCTION AREA SIGN DETAILS SEE SHEET CS-1.

LEGEND

- CHANNELIZER (SURFACE MOUNTED)
- BARRICADE MOUNTED CONSTRUCTION AREA SIGN
- STATIONARY MOUNTED CONSTRUCTION AREA SIGN
- Temp FLASHING BEACON (SEE ELECTRICAL PLANS)
- LIMIT OF Temp STRIPE
- CONSTRUCTION AREA SIGN

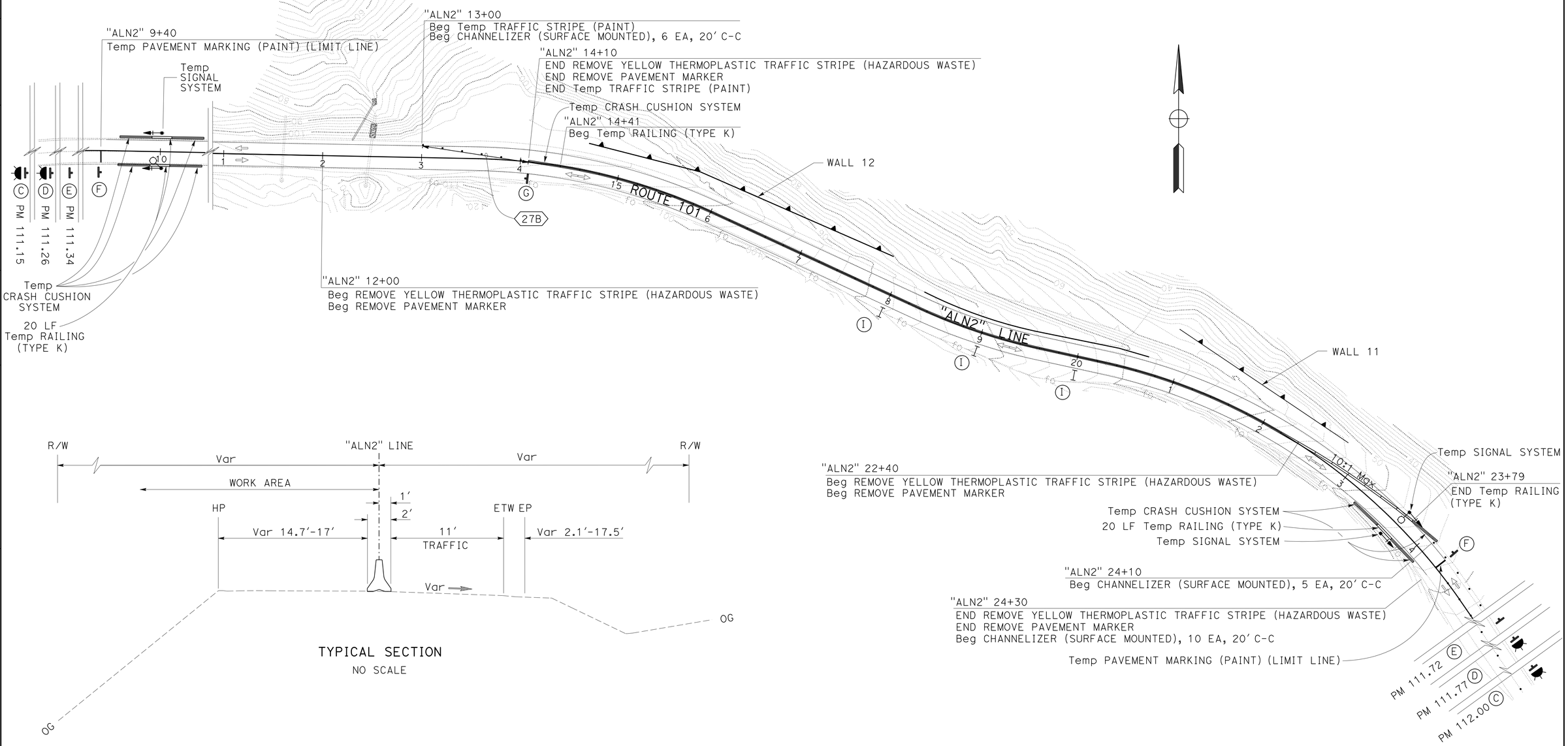

TYPICAL SECTION
NO SCALE

TYPICAL LANE CLOSURE FOR WALL 11 & 12 CONSTRUCTION

TRAFFIC HANDLING PLAN

SCALE: 1" = 50'

TH-2

APPROVED FOR TRAFFIC HANDLING WORK ONLY

STATE OF CALIFORNIA - DEPARTMENT OF TRANSPORTATION
Caltrans TRAFFIC OPERATIONS

FUNCTIONAL SUPERVISOR: KEVIN CHURCH
CALCULATED-DESIGNED BY: SHERI M. RODRIGUEZ
CHECKED BY: PAUL W. HAILEY
REVISED BY
DATE REVISED

LAST REVISION 06-15-16
DATE PLOTTED => 26-JUL-2016
TIME PLOTTED => 09:48

P:\PROJ\01\0B430\drafting\sheets\0112000127md002.dgn

BORDER LAST REVISED 7/2/2010
USERNAME => s132662
DGN FILE => 0112000127md002.dgn
RELATIVE BORDER SCALE IS IN INCHES 0 1 2 3
UNIT 0042
PROJECT NUMBER & PHASE 01120001271

Dist	COUNTY	ROUTE	POST MILES TOTAL PROJECT	SHEET No.	TOTAL SHEETS
01	Hum	101	111.3/111.7	16	83

Sheri M. Rodriguez 06-15-16
REGISTERED CIVIL ENGINEER DATE

June 20, 2016
PLANS APPROVAL DATE

REGISTERED PROFESSIONAL ENGINEER SHERI M. RODRIGUEZ No. C66861 Exp. 9-30-16 CIVIL STATE OF CALIFORNIA

THE STATE OF CALIFORNIA OR ITS OFFICERS OR AGENTS SHALL NOT BE RESPONSIBLE FOR THE ACCURACY OR COMPLETENESS OF SCANNED COPIES OF THIS PLAN SHEET.

NOTES:

1. THIS TRAFFIC HANDLING PLAN FOR USE DURING CONSTRUCTION OF WALL 14 (SEE STRUCTURE PLANS).
2. SEE ELECTRICAL PLANS FOR Temp SIGNAL SYSTEM AND FLASHING BEACON DETAILS.

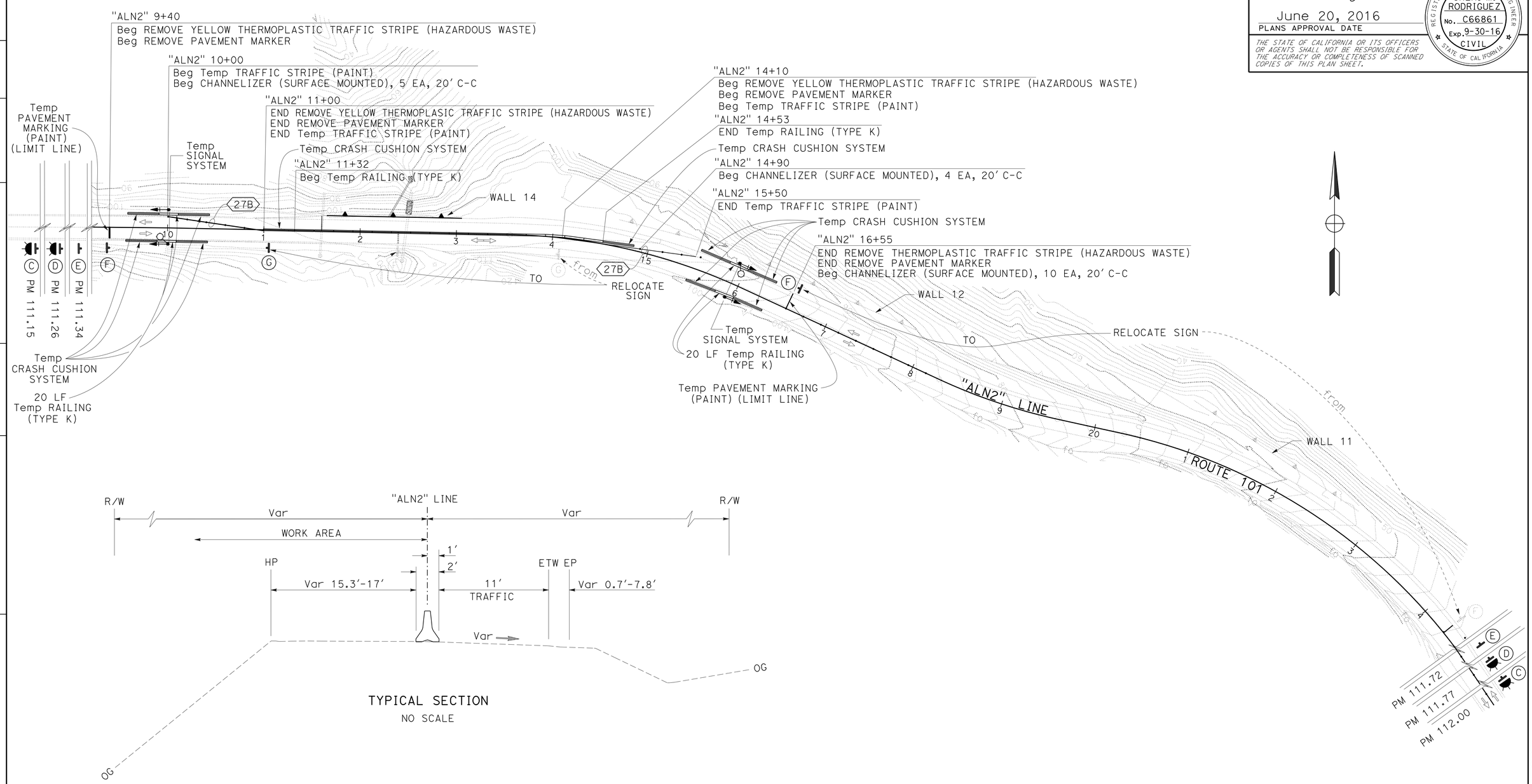

TYPICAL SECTION
NO SCALE

TYPICAL LANE CLOSURE FOR WALL 14 CONSTRUCTION

TRAFFIC HANDLING PLAN

SCALE: 1" = 50'

APPROVED FOR TRAFFIC HANDLING WORK ONLY

TH-3

REVISED BY | DATE REVISED
SHERI M. RODRIGUEZ | PAUL W. HAILEY
CALCULATED-DESIGNED BY | CHECKED BY
FUNCTIONAL SUPERVISOR: KEVIN CHURCH

STATE OF CALIFORNIA - DEPARTMENT OF TRANSPORTATION
Caltrans® TRAFFIC OPERATIONS

P:\PROJ\01\0B430\drafting\sheets\0112000127md003.dgn

LAST REVISION 06-15-16 | DATE PLOTTED => 26-JUL-2016 | TIME PLOTTED => 09:48

Dist	COUNTY	ROUTE	POST MILES TOTAL PROJECT	SHEET No.	TOTAL SHEETS
01	Hum	101	111.3/111.7	17	83

Sheri M. Rodriguez 06-15-16
REGISTERED CIVIL ENGINEER DATE

June 20, 2016
PLANS APPROVAL DATE

REGISTERED PROFESSIONAL ENGINEER SHERI M. RODRIGUEZ No. C66861 Exp. 9-30-16 CIVIL STATE OF CALIFORNIA

THE STATE OF CALIFORNIA OR ITS OFFICERS OR AGENTS SHALL NOT BE RESPONSIBLE FOR THE ACCURACY OR COMPLETENESS OF SCANNED COPIES OF THIS PLAN SHEET.

TRAFFIC CONTROL DEVICES

SHEET	LOCATION FROM	LOCATION TO	CHANNELIZER (SURFACE MOUNTED) WHITE	Temp RAILING (TYPE K)	Temp CRASH CUSHION SYSTEM
			EA	LF	EA
CS-1/ TH-2	PM 111.77			40	1
	PM 112.00			40	1
	PM 112.21			40	1
TH-2	"ALN2" 9+57, 12.5′ RT	"ALN2" 10+42, 13′ RT		20	2
	"ALN2" 9+59, 14′ LT	"ALN2" 10+43, 13.5′ LT		20	2
	"ALN2" 13+00, 12′ LT	"ALN2" 14+10	6		
	"ALN2" 14+10	"ALN2" 24+10, 17′ LT		940	2
	"ALN2" 23+24, 12.5′ RT	"ALN2" 24+10, 12.5′ RT		20	2
	"ALN2" 24+10, 14.5′ LT	"ALN2" 24+90, 14.5′ LT	5		
	"ALN2" 24+30	"ALN2" 26+10	10		
TH-3	"ALN2" 10+00, 12′ LT	"ALN2" 10+80	5		
	"ALN2" 11+00	"ALN2" 14+85, 4′ LT		320	2
	"ALN2" 14+90, 3′ LT	"ALN2" 15+50, 13′ LT	4		
	"ALN2" 15+47, 13′ RT	"ALN2" 16+33, 11′ RT		20	2
	"ALN2" 15+52, 20′ LT	"ALN2" 16+36, 20′ LT		20	2
	"ALN2" 16+55	"ALN2" 18+35	10		
		TOTAL	40	1480	17

TEMPORARY PAVEMENT DELINEATION

SHEET	LOCATION FROM	LOCATION TO	LENGTH	DETAIL	REMOVE ** YELLOW THERMOPLASTIC TRAFFIC STRIPE (HAZARDOUS WASTE)	** REMOVE PAVEMENT MARKER	Temp TRAFFIC STRIPE (PAINT)	Temp PAVEMENT MARKING (PAINT)	REMOVE PAINTED TRAFFIC STRIPE	REMOVE PAINTED PAVEMENT MARKING
			LF		LF	EA	LF	SQFT	LF	SQFT
TH-2	"ALN2" 12+00	"ALN2" 14+10	210	22	420	18				
	"ALN2" 9+40			LIMIT LINE				12		
	"ALN2" 13+00	"ALN2" 14+10	110	27B			110			
	"ALN2" 22+40	"ALN2" 24+30	190	22	380	18				
	"ALN2" 24+30			LIMIT LINE				12		
TH-2*	"ALN2" 12+00	"ALN2" 14+10	210	22			210			
	"ALN2" 12+45			LIMIT LINE						12
	"ALN2" 13+00	"ALN2" 14+10	110	27B					110	
	"ALN2" 22+40	"ALN2" 24+30	190	22			190			
	"ALN2" 24+30			LIMIT LINE						12
TH-3	"ALN2" 9+40	"ALN2" 11+00	160	22	320	14				
	"ALN2" 9+40			LIMIT LINE				12		
	"ALN2" 10+00	"ALN2" 11+00	100	27B			100			
	"ALN2" 14+10	"ALN2" 16+55	245	22	490	22				
	"ALN2" 14+10	"ALN2" 15+50	140	27B			140			
	"ALN2" 16+55			LIMIT LINE				12		
				TOTAL	1610	72	750	48	110	24

* QUANTITIES TO RESTORE PAVEMENT DELINEATION WHEN TRAFFIC HANDLING ON SHEET TH-2 NO LONGER APPLIES.

** TOTALS INCLUDED IN REMOVE PAVEMENT DELINEATION TABLE.

TRAFFIC HANDLING QUANTITIES

THQ-1

REVISED BY	DATE REVISED
SHERI M. RODRIGUEZ	PAUL W. HAILEY

CALCULATED-DESIGNED BY / CHECKED BY

FUNCTIONAL SUPERVISOR: KEVIN CHURCH

STATE OF CALIFORNIA - DEPARTMENT OF TRANSPORTATION
Caltrans® TRAFFIC OPERATIONS

P:\PROJ\01\0B430\drafting\sheets\0112000127mf001.dgn

LAST REVISION 06-15-16 | DATE PLOTTED => 26-JUL-2016 | TIME PLOTTED => 09:48

Dist	COUNTY	ROUTE	POST MILES TOTAL PROJECT	SHEET No.	TOTAL SHEETS
01	Hum	101	111.3/111.7	18	83

Marie Armijo Brady 06-15-16
REGISTERED CIVIL ENGINEER DATE

June 20, 2016
PLANS APPROVAL DATE

REGISTERED PROFESSIONAL ENGINEER Marie A. Brady No. 59387 Exp. 12/13/17 CIVIL STATE OF CALIFORNIA

THE STATE OF CALIFORNIA OR ITS OFFICERS OR AGENTS SHALL NOT BE RESPONSIBLE FOR THE ACCURACY OR COMPLETENESS OF SCANNED COPIES OF THIS PLAN SHEET.

REMOVE PAVEMENT DELINEATION

LOCATION (STATION) "ALN2" LINE			DETAIL NUMBER	DETAIL LENGTH	REMOVE YELLOW THERMOPLASTIC TRAFFIC STRIPE (HAZARDOUS WASTE)	REMOVE THERMOPLASTIC TRAFFIC STRIPE	REMOVE PAVEMENT MARKER
FROM	TO	R†/CL/L†		LF	LF	LF	EA
11+00	11+60	CL	22	60	120		6
18+30	20.69.6	CL	22	239.6	479.2		20
10+40	11+60	R†/L†	27B	120		240	
11+60	23+13.6	R†	27B	1153.6		1153.6	
23+13.6	23+90	R†/L†	27B	76.4		152.8	
TOTALS FROM Sh† THQ-1					1610		72
TOTAL					2209.2	1546.4	98

PAVEMENT DELINEATION

LOCATION "ALN2" LINE		DETAIL NUMBER	DETAIL LENGTH	4" THERMOPLASTIC TRAFFIC STRIPE		PAVEMENT MARKER (RETROREFLECTIVE-RECESSED)
				SOLID WHITE	SOLID YELLOW	TYPE D
STATION	R†/CL/L†		LF	LF	LF	EA
7+40.0 TO 26+30.0	CL	22	1890		3780	160
7+40.0 TO 26+30.0	R†	27B	1890	1890		
7+40.0 TO 26+30.0	L†	27B	1890	1890		
SUBTOTAL				3780	3780	
TOTAL				7560		160

PAVEMENT DELINEATION QUANTITIES

PDQ-1

REVISED BY | DATE REVISED
MARIE A. BRADY | GINNY SEIBERT
CALCULATED-DESIGNED BY | CHECKED BY
FUNCTIONAL SUPERVISOR: KELLY B. TIMMONS

STATE OF CALIFORNIA - DEPARTMENT OF TRANSPORTATION
Caltrans® DESIGN

P:\PROJ\01\0B430\drafting\sheets\0112000127nb001.dgn

LAST REVISION 06-15-16 | DATE PLOTTED => 26-JUL-2016 TIME PLOTTED => 09:48

Dist	COUNTY	ROUTE	POST MILES TOTAL PROJECT	SHEET No.	TOTAL SHEETS
01	Hum	101	111.3/111.7	19	83

Marie Armijo Brady 06-15-16
REGISTERED CIVIL ENGINEER DATE

June 20, 2016
PLANS APPROVAL DATE

REGISTERED PROFESSIONAL ENGINEER Marie A. Brady No. 59387 Exp. 12/13/17 CIVIL STATE OF CALIFORNIA

THE STATE OF CALIFORNIA OR ITS OFFICERS OR AGENTS SHALL NOT BE RESPONSIBLE FOR THE ACCURACY OR COMPLETENESS OF SCANNED COPIES OF THIS PLAN SHEET.

ROADWAY QUANTITIES

LOCATION (STATION) "ALN2" FROM	TO	COLD PLANE ASPHALT CONCRETE PAVEMENT	SHOULDER BACKING	CLASS 2 AB (CY)	HOT MIX ASPHALT (TYPE A)	GEOSYNTHETIC PAVEMENT INTERLAYER (PAVEMENT FABRIC)	TACK COAT	ROADWAY EXCAVATION	(N) EMBANKMENT	ASPHALT BINDER (GEOSYNTHETIC PAVEMENT INTERLAYER)	(N) SELECTED MATERIAL	CENTERLINE RUMBLESTRIP (SINUSOIDAL)	DESCRIPTION
FROM	TO	SQYD	TON	CY	TON	SQYD	TON	CY	CY	TON	CY	STA	
7+40	10+40	883					0.18						MAINLINE CONFORM
23+90	24+30	867					0.18						MAINLINE CONFORM
11+60.20	18+30.30			487	508	337.9	0.55	1027	333	0.4	170		FULL DEPTH AC/WITH AC BASE
20+69.60	23+13.60			225	154	108.4	0.27	266	292	0.2	50		AC WITH BASE
7+40	26+30		55		595		0.53		5			18.9	MAINLINE EP TO EP
FROM HMA DIKE					61								
	TOTAL	1750	55	712	1318	446.3	1.17	1293	630	0.6	220	18.9	

(N) - NOT A SEPARATE PAY ITEM, FOR INFORMATION ONLY.

TEMPORARY FENCE

LOCATION (STATION) "ALN2" LINE FROM	TO	TEMPORARY FENCE (TYPE ESA)
FROM	TO	LF
11+48	12+75	197
12+75	18+11	597
23+45	25+35	556
	TOTAL	1350

RESET ROADSIDE SIGN

LOCATION (STATION) "ALN2" LINE FROM	TO	RESET ROADSIDE SIGN (ONE POST)
FROM	TO	EA
12+98.7, L+		1
	TOTAL	1

TEMPORARY BMP'S

LOCATION (STATION) "ALN2" FROM	TO	TEMPORARY COVER	TEMPORARY CHECK DAM	TEMPORARY DRAINAGE INLET PROTECTION	TEMPORARY FIBER ROLL	TEMPORARY GRAVEL BAG BERM	TEMPORARY SILT FENCE	RECP (JUTE MESH)	TEMPORARY CONSTRUCTION ENTRANCE
FROM	TO	SQYD	LF	EA	LF	LF	LF	SQYD	EA
14+64	17+88	1835			400		350	1835	
20+89	22+80	1140			250		240	1140	
13+50	26+00		625						
24+75	25+25		30						2
11+60				1					
12+47.53				1					
11+65	13+05.5				115		130		
13+50	16+00					250			1
	TOTAL	2975	655	2	765	250	720	2975	3

DESTROY WELL

LOCATION "ALN2" LINE STATION, OFFSET	EA
12+32.07, 7.37' L+	1
15+20.78, 31.77' L+	1
15+67.71, 27.81' L+	1
17+03.79, 33.33' L+	1
19+37.69, 63.79' L+	1
19+81.01, 30.97' R+	1
21+72.36, 28.67' L+	1
22+33.93, 28.40' L+	1
22+35.19, 6.61' R+	1
TOTAL	9

CRASH CUSHION

LOCATION (STATION) "ALN2" LINE FROM	TO	CRASH CUSHION (TYPE TRACC)
FROM	TO	EA
11+65.00		1
13+05.50		1
	TOTAL	2

RESET MILEPOST MARKER

LOCATION (STATION)	QUANTITY EA	NOTES
"ALN2" 16+20.00, R+ & L+	2	PM 111.50
TOTAL	2	

OBJECT MARKER

LOCATION (STATION) "ALN2" LINE FROM	TO	OBJECT MARKER (TYPE P)
FROM	TO	EA
11+65.00		1
13+05.50		1
	TOTAL	2

DIKE

LOCATION (STATION) "ALN2" LINE STATION	R+	L+	REMOVE AC DIKE	PLACE HOT MIX ASPHALT DIKE (TYPE E)	PLACE HOT MIX ASPHALT DIKE (TYPE A)	HOT MIX ASPHALT (TYPE A) *
STATION	R+	L+	LF	LF	LF	TON
7+40 TO 25+26	R+		1786		1786	50
17+20 TO 21+25		L+	405	405		11
TOTAL			2191	405	1786	61

* - TOTAL QUANTITY INCLUDED IN ROADWAY TABLE.

SUMMARY OF QUANTITIES

Q-1

REVISED BY | DATE REVISED
MARIE A. BRADY | GINNY SEIBERT
CALCULATED-DESIGNED BY | CHECKED BY
FUNCTIONAL SUPERVISOR: KELLY B. TIMMONS
STATE OF CALIFORNIA - DEPARTMENT OF TRANSPORTATION
Caltrans DESIGN
P:\PROJ\01\0B430\drafting\sheets\0112000127pa001.dgn

LAST REVISION 06-15-16 | DATE PLOTTED => 26-JUL-2016 TIME PLOTTED => 09:48

Dist	COUNTY	ROUTE	POST MILES TOTAL PROJECT	SHEET No.	TOTAL SHEETS
01	Hum	101	111.3/111.7	20	83

Laura Lazzarotto
LICENSED LANDSCAPE ARCHITECT

June 20, 2016
PLANS APPROVAL DATE

LICENSED LANDSCAPE ARCHITECT
Laura Lazzarotto
Signature
8-31-17
Renewal Date
06-15-16
Date
STATE OF CALIFORNIA

THE STATE OF CALIFORNIA OR ITS OFFICERS OR AGENTS SHALL NOT BE RESPONSIBLE FOR THE ACCURACY OR COMPLETENESS OF SCANNED COPIES OF THIS PLAN SHEET.

NOTE:

FOR ACCURATE RIGHT OF WAY DATA, CONTACT RIGHT OF WAY ENGINEERING AT THE DISTRICT OFFICE.

ABBREVIATIONS:

ORG ORGANIC

LEGEND

- WOOD MULCH UNDER RECP (NETTING)
- WOOD MULCH
- DUFF UNDER RECP (NETTING)

HIGHWAY PLANTING QUANTITIES

SOIL AMEND	ORG FERT	DUFF	WOOD MULCH	ROLLED EROSION CONTROL PRODUCT (NETTING)
CF	LB	SQFT	CY	SQFT
17.9	16.5	2348	184	21,332

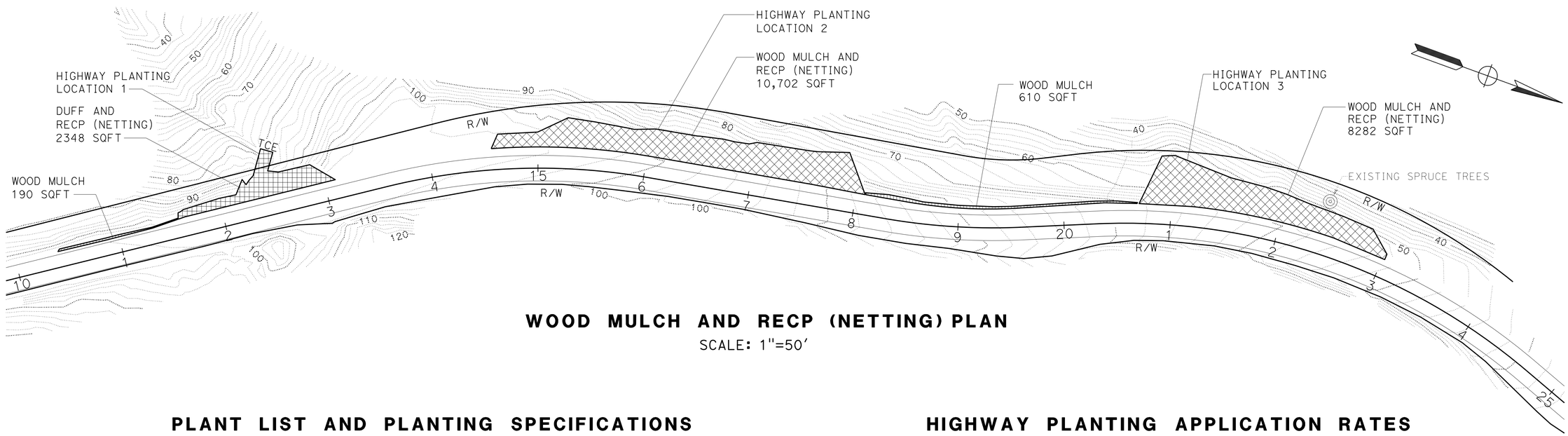

WOOD MULCH AND RECP (NETTING) PLAN

SCALE: 1"=50'

PLANT LIST AND PLANTING SPECIFICATIONS

SYMBOL	PLANT TYPE	SIZE ⑤	QUANTITY EA	HOLE SIZE Dia	HOLE SIZE DEPTH	BASIN TYPE	SOIL AMEND ① CUFT	ORG FERT ① LB	SPACING	REMARKS PLANTS FURNISHED BY STATE - ANTICIPATED POT SIZE
○	WOODY PLANTS	⑫	141	12"	24"	II	0.09	0.002	③	4" x 14" TREEPOT OR SMALLER
○	HERBACEOUS PLANTS	⑫	65	10"	10"	II	0.08	0.002	③	1-GALLON OR SMALLER

HIGHWAY PLANTING APPLICATION RATES

ITEM	MATERIAL DESCRIPTION	MATERIAL TYPE	APPLICATION RATE	REMARKS
WOOD MULCH	BARK	SHREDDED BARK	405 CY/ACRE	3" DEPTH
ROLLED EROSION CONTROL PRODUCT (NETTING)	COIR NETTING	TYPE B	—	—
DUFF	—	—	—	3" DEPTH

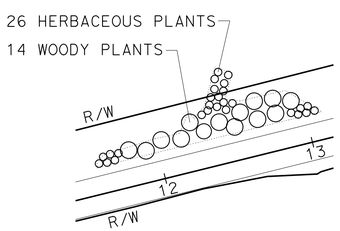

LOCATION 1

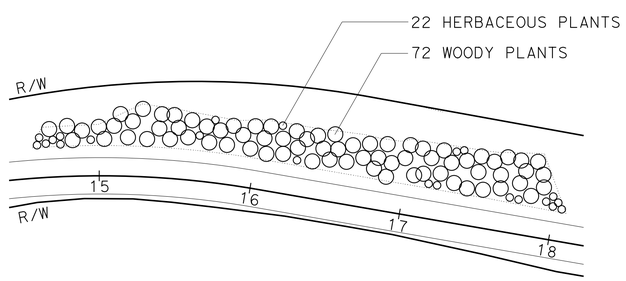

LOCATION 2

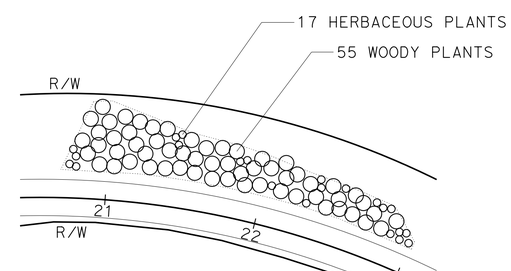

LOCATION 3

PLANTING PLAN

SCALE: 1"=50'

APPLICABLE WHEN CIRCLED:

① - QUANTITIES SHOWN ARE "PER PLANT" UNLESS SHOWN AS SQFT OR SQYD APPLICATION RATES
② - BASIN MULCH IS INCLUDED WITH MULCH QUANTITIES SHOWN ON PLANTING PLAN
③ - EXACT LOCATION OF PLANTS TO BE DETERMINED IN THE FIELD
4 - SEE SPECIAL PROVISIONS
⑤ - DEPARTMENT-FURNISHED

PLANT LIST, PLANTING PLAN AND QUANTITIES

SCALE: AS SHOWN

PL-1

REVISED BY | DATE REVISED
LAURA LAZZAROTTO | PHLORA BARBASH
CALCULATED-DESIGNED BY | CHECKED BY
FUNCTIONAL SUPERVISOR: TIM BOESE

STATE OF CALIFORNIA - DEPARTMENT OF TRANSPORTATION
Caltrans® LANDSCAPE ARCHITECTURE

LAST REVISION 06-15-16 | DATE PLOTTED => 26-JUL-2016 | TIME PLOTTED => 09:48

Dist	COUNTY	ROUTE	POST MILES TOTAL PROJECT	SHEET No.	TOTAL SHEETS
01	Hum	101	111.3/111.7	21	83

Brian T. Finck 06-15-16
REGISTERED ELECT ENGINEER DATE

June 20, 2016
PLANS APPROVAL DATE

REGISTERED PROFESSIONAL ENGINEER BRIAN T. FINCK No. 17756 Exp. 6-30-16 ELECT STATE OF CALIFORNIA

THE STATE OF CALIFORNIA OR ITS OFFICERS OR AGENTS SHALL NOT BE RESPONSIBLE FOR THE ACCURACY OR COMPLETENESS OF SCANNED COPIES OF THIS PLAN SHEET.

LEGEND

- UPS — UNINTERRUPTIBLE POWER SUPPLY
- (SC) — SIGNAL COMMON
- ATS — AUTOMATIC TRANSFER SWITCH
- GEN — GENERATOR
- C — CONTACTOR
- AUTO-TEST SWITCH
- Y — FLASHING BEACON (SOLAR POWERED) SEE CONSTRUCTION AREA SIGNS SHEETS AND STAGE CONSTRUCTION SHEETS
- CONSTRUCTION AREA SIGN SEE CS-1 FOR DETAILS

PHASE DIAGRAM

Ø2	Ø4

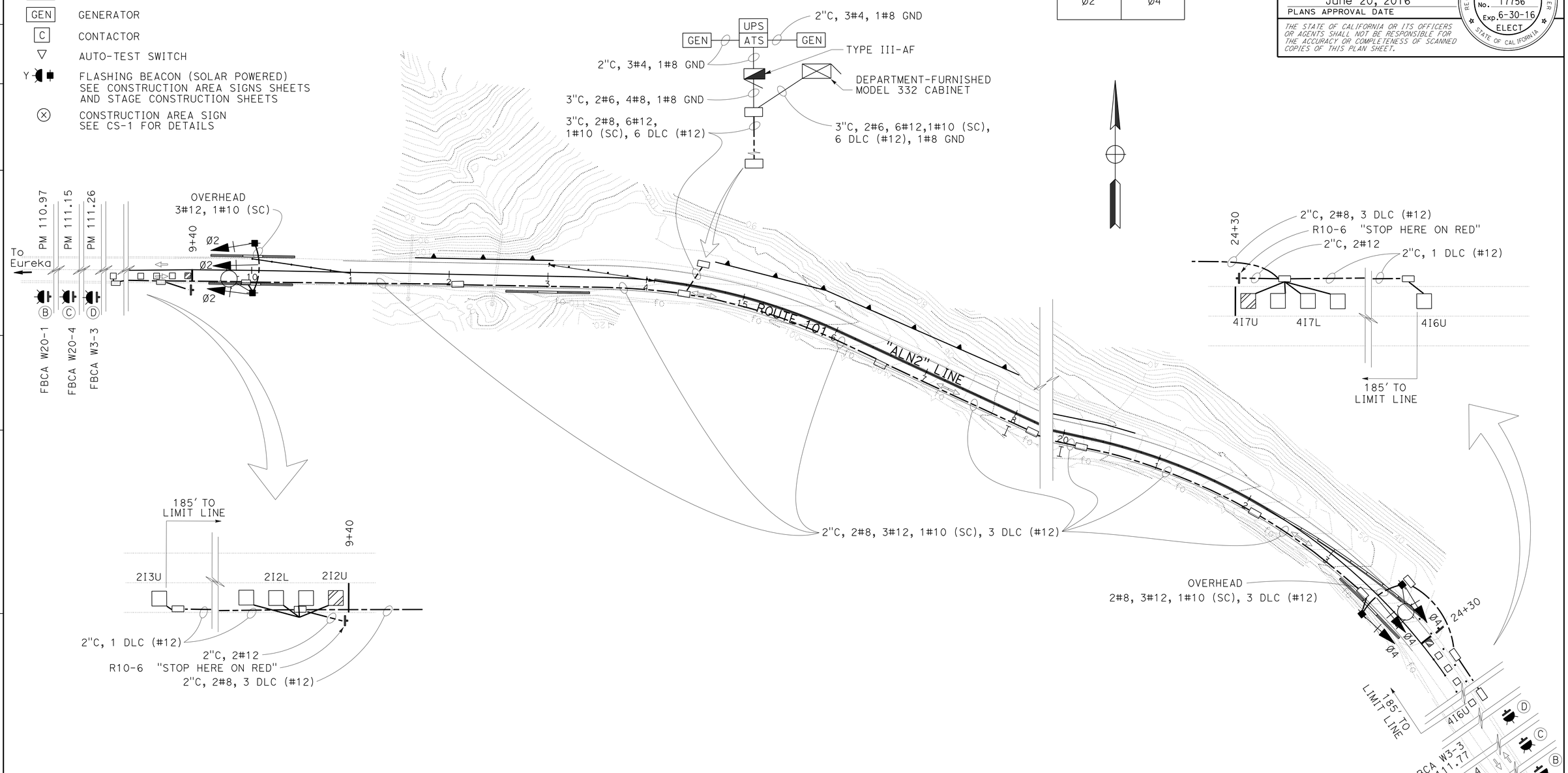

(LOCATION 1)

TEMPORARY SIGNAL SYSTEM

SCALE: 1" = 50'

THIS PLAN IS ACCURATE FOR ELECTRICAL WORK ONLY

E-1

REVISED BY	DATE REVISED
BRIAN FINCK	WILLIAM BARTLEY
CALCULATED-DESIGNED BY	CHECKED BY
FUNCTIONAL SUPERVISOR	JOHN CARSON

STATE OF CALIFORNIA - DEPARTMENT OF TRANSPORTATION
Caltrans®
ELECTRICAL

P:\PROJ\01\0B430\drafting\sheets\0112000127ua001.dgn

LAST REVISION 06-15-16 | DATE PLOTTED => 26-JUL-2016 | TIME PLOTTED => 09:48

Dist	COUNTY	ROUTE	POST MILES TOTAL PROJECT	SHEET No.	TOTAL SHEETS
01	Hum	101	111.3/111.7	22	83

Brian T. Finck 06-15-16
REGISTERED ELECT ENGINEER DATE

June 20, 2016
PLANS APPROVAL DATE

REGISTERED PROFESSIONAL ENGINEER BRIAN T. FINCK No. 17756 Exp. 6-30-16 ELECT STATE OF CALIFORNIA

THE STATE OF CALIFORNIA OR ITS OFFICERS OR AGENTS SHALL NOT BE RESPONSIBLE FOR THE ACCURACY OR COMPLETENESS OF SCANNED COPIES OF THIS PLAN SHEET.

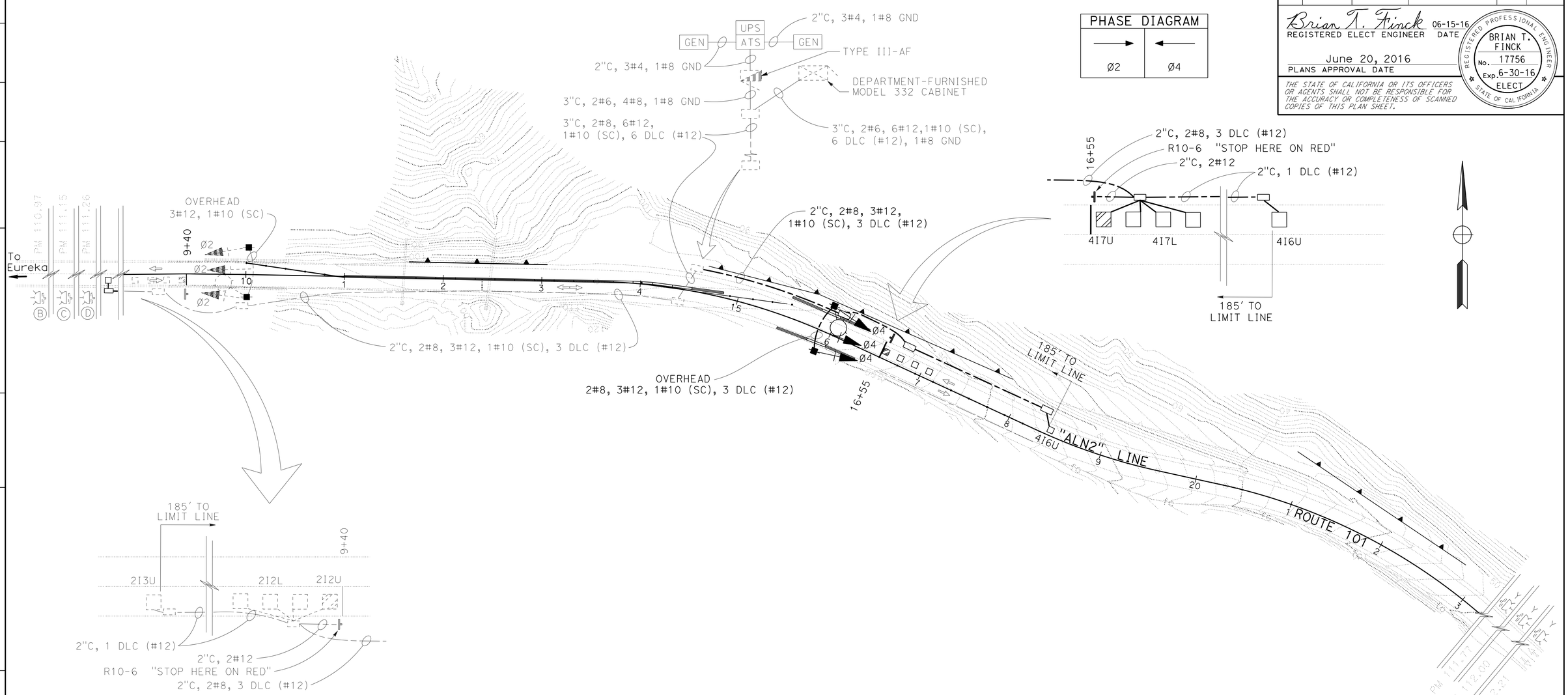

(LOCATION 2)

TEMPORARY SIGNAL SYSTEM

SCALE: 1" = 50'

E-2

THIS PLAN IS ACCURATE FOR ELECTRICAL WORK ONLY

REVISED BY	DATE REVISED

CALCULATED-DESIGNED BY: BRIAN FINCK
CHECKED BY: WILLIAM BARTLEY
FUNCTIONAL SUPERVISOR: JOHN CARSON

STATE OF CALIFORNIA - DEPARTMENT OF TRANSPORTATION
Caltrans
ELECTRICAL

P:\PROJ\01\0B430\drafting\sheets\0112000127ua002.dgn

LAST REVISION 06-15-16 | DATE PLOTTED => 26-JUL-2016 | TIME PLOTTED => 09:49

Dist	COUNTY	ROUTE	POST MILES TOTAL PROJECT	SHEET No.	TOTAL SHEETS
01	Hum	101	111.3/111.7	23	83

Brian T. Finck 06-15-16
REGISTERED ELECT ENGINEER DATE

June 20, 2016
PLANS APPROVAL DATE

REGISTERED PROFESSIONAL ENGINEER BRIAN T. FINCK No. 17756 Exp. 6-30-16 ELECT STATE OF CALIFORNIA

THE STATE OF CALIFORNIA OR ITS OFFICERS OR AGENTS SHALL NOT BE RESPONSIBLE FOR THE ACCURACY OR COMPLETENESS OF SCANNED COPIES OF THIS PLAN SHEET.

NOTE: (THIS SHEET)

1 WOOD POLES SHALL BE LOCATED OUTSIDE THE CLEAR RECOVERY ZONE OR PROTECTED IN PLACE.

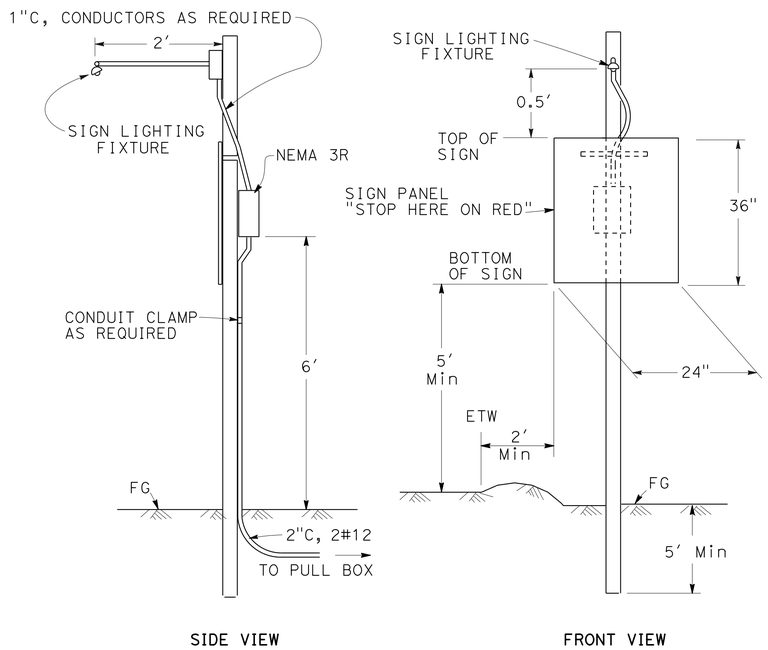

SIDE VIEW FRONT VIEW

TYPICAL SIGN ILLUMINATION

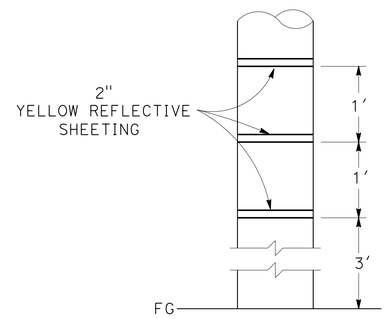

REFLECTIVE MARKING FOR WOOD POLE

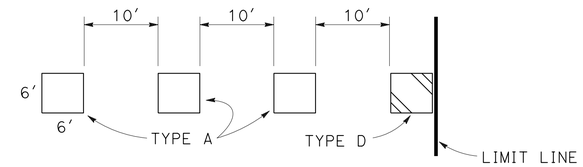

TYPICAL LOOP DETAIL

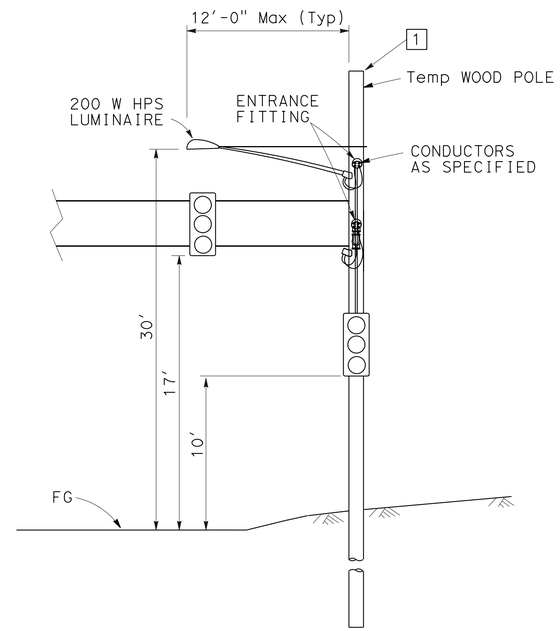

TEMPORARY TRAFFIC SIGNAL

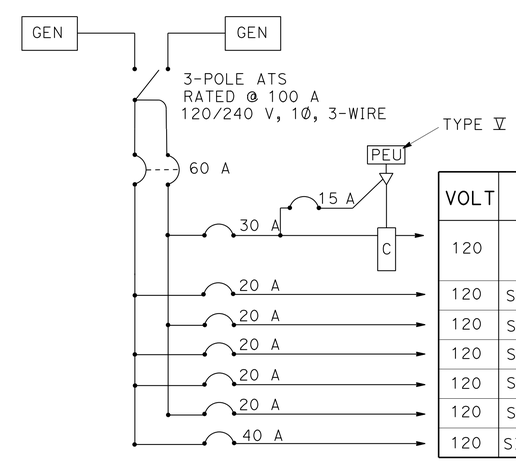

VOLT	NAMEPLATE DESCRIPTION
120	LIGHTING/ SIGN LIGHTING
120	SPARE
120	SPARE
120	SPARE
120	SPARE
120	SPARE
120	SIGNALS

SERVICE WIRING DIAGRAM

TYPE III-AF SERVICE EQUIPMENT ENCLOSURE

ELECTRICAL DETAILS

NO SCALE

E-3

THIS PLAN IS ACCURATE FOR ELECTRICAL WORK ONLY

REVISED BY	DATE REVISED

CALCULATED-DESIGNED BY: BRIAN FINCK
CHECKED BY: WILLIAM BARTLEY
FUNCTIONAL SUPERVISOR: JOHN CARSON

STATE OF CALIFORNIA - DEPARTMENT OF TRANSPORTATION
Caltrans
ELECTRICAL

P:\PROJ\01\0B430\drafting\sheets\0112000127ua003.dgn

LAST REVISION 06-15-16
DATE PLOTTED => 26-JUL-2016
TIME PLOTTED => 09:49

Dist	COUNTY	ROUTE	POST MILES TOTAL PROJECT	SHEET No.	TOTAL SHEETS
01	Hum	101	111.3/111.7	24	83

Brian T. Finck 06-15-16
REGISTERED ELECT ENGINEER DATE

June 20, 2016
PLANS APPROVAL DATE

REGISTERED PROFESSIONAL ENGINEER BRIAN T. FINCK No. 17756 Exp. 6-30-16 ELECT STATE OF CALIFORNIA

THE STATE OF CALIFORNIA OR ITS OFFICERS OR AGENTS SHALL NOT BE RESPONSIBLE FOR THE ACCURACY OR COMPLETENESS OF SCANNED COPIES OF THIS PLAN SHEET.

LEGEND

A-h = AMPERE HOUR

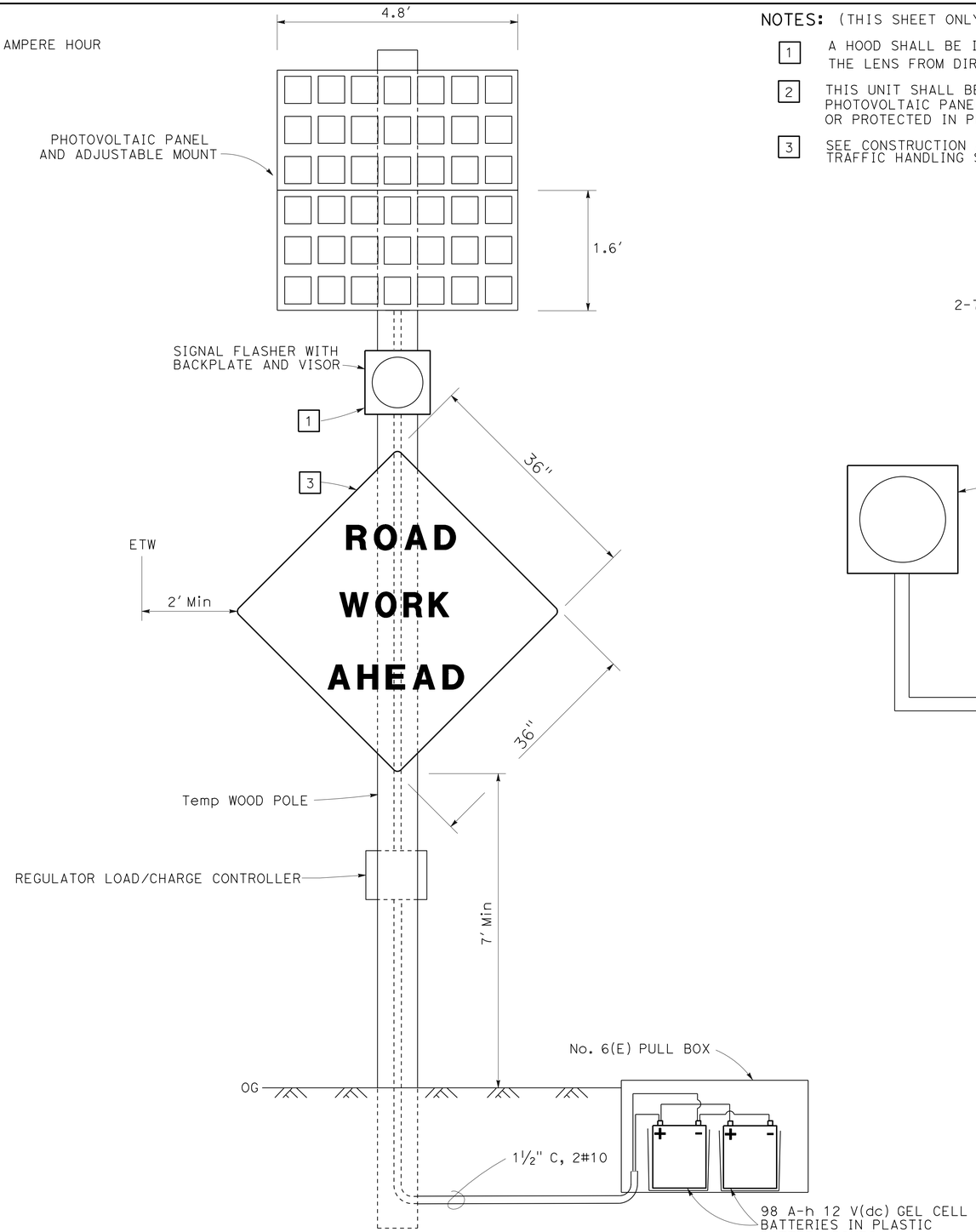

FLASHING BEACON (SOLAR POWERED)

NOTES: (THIS SHEET ONLY)

1. A HOOD SHALL BE INSTALLED ON EACH FLASHER HEAD TO SHIELD THE LENS FROM DIRECT EXPOSURE OF SOLAR RADIATION.
2. THIS UNIT SHALL BE LOCATED IN AN UNSHADED AREA. WOOD POLE WITH PHOTOVOLTAIC PANELS SHALL BE LOCATED OUTSIDE THE CLEAR RECOVERY ZONE OR PROTECTED IN PLACE.
3. SEE CONSTRUCTION AREA SIGN AND TRAFFIC HANDLING SHEETS FOR SIGNS Ⓑ, Ⓓ AND Ⓒ.

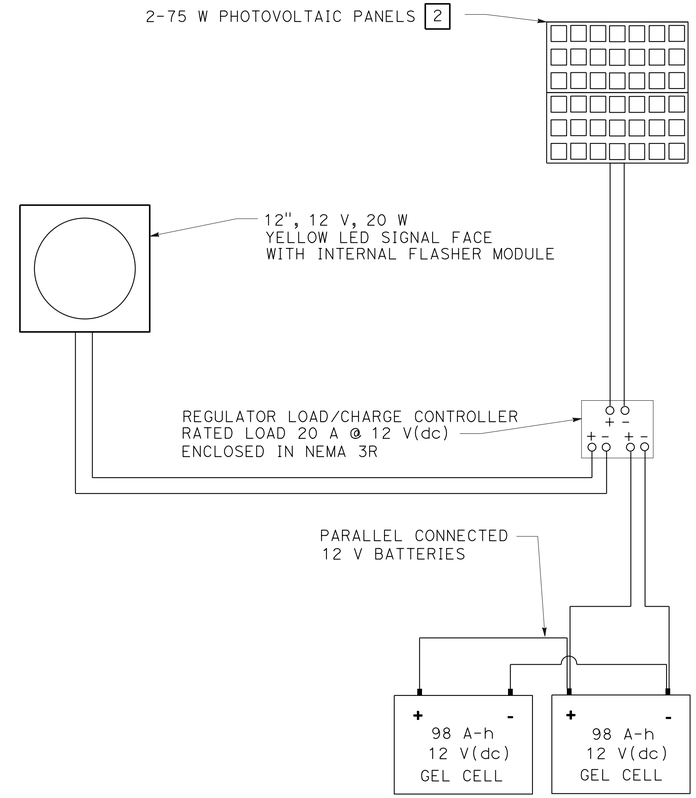

CONNECTION DIAGRAM

ELECTRICAL DETAILS

NO SCALE

E-4

THIS PLAN IS ACCURATE FOR ELECTRICAL WORK ONLY

REVISED BY	DATE REVISED

CALCULATED-DESIGNED BY	CHECKED BY
BRIAN FINCK	WILLIAM BARTLEY

FUNCTIONAL SUPERVISOR
JOHN CARSON

STATE OF CALIFORNIA - DEPARTMENT OF TRANSPORTATION
Caltrans
ELECTRICAL

P:\PROJ\01\0B430\drafting\sheets\01120001271ua004.dgn

LAST REVISION 06-15-16 | DATE PLOTTED => 26-JUL-2016 | TIME PLOTTED => 09:49

Dist	COUNTY	ROUTE	POST MILES TOTAL PROJECT	SHEET No.	TOTAL SHEETS
01	Hum	101	111.3/111.7	25	83

Brian T. Finck 06-15-16
REGISTERED ELECT ENGINEER DATE

June 20, 2016
PLANS APPROVAL DATE

REGISTERED PROFESSIONAL ENGINEER
BRIAN T. FINCK
No. 17756
Exp. 6-30-16
ELECT
STATE OF CALIFORNIA

THE STATE OF CALIFORNIA OR ITS OFFICERS OR AGENTS SHALL NOT BE RESPONSIBLE FOR THE ACCURACY OR COMPLETENESS OF SCANNED COPIES OF THIS PLAN SHEET.

NOTE:

THE QUANTITIES ON THIS SHEET ARE NOT SEPARATE PAY ITEMS AND ARE FOR INFORMATION ONLY.

TEMPORARY SIGNAL SYSTEM

SHEET NUMBER	WOOD POLE	2" CONDUIT TYPE 3	GENERATOR	#5 PULL BOX	#6 (E) PULL BOX	3 SECTION SIGNAL HEAD	FBCA	SIGN LIGHTING FIXTURE	200 W HPS LUMINAIRE	MESSENGER CABLE	TYPE D LOOP	TYPE A LOOP	DLC	#4 CONDUCTORS	#6 CONDUCTORS	#8 CONDUCTORS	#8 CONDUCTORS (G)	#10 CONDUCTORS	#12 CONDUCTORS	NEMA 3R SERVICE ENCLOSEURE	MODEL 332L CABINET FOUNDATION PLATFORM	UPS
	EA	LF	EA	EA	EA	EA	EA	EA	EA	LF	EA	EA	LF	LF	LF	LF	LF	LF	LF	EA	EA	EA
E-1	10	1900	2	15	6	6	6	2	2	200	2	8	5100	200	100	3400	1700	1700	5100	8	1	1
E-2	2	500	0	5	0	3	0	1	1	100	1	4	1500	0	0	1000	500	500	1500	1	0	0

ELECTRICAL QUANTITIES

E-5

THIS PLAN IS ACCURATE FOR ELECTRICAL WORK ONLY

REVISED BY | DATE REVISED
BRIAN FINCK | WILLIAM BARTLEY
CALCULATED-DESIGNED BY | CHECKED BY
FUNCTIONAL SUPERVISOR
JOHN CARSON

STATE OF CALIFORNIA - DEPARTMENT OF TRANSPORTATION
Caltrans
ELECTRICAL

P:\PROJ\01\0B430\drafting\sheets\0112000127ua005.dgn

LAST REVISION 06-15-16 | DATE PLOTTED => 26-JUL-2016 | TIME PLOTTED => 09:49

M

Maint	MAINTENANCE
Max	MAXIMUM
MB	METAL BEAM
MBB	METAL BEAM BARRIER
MBGR	METAL BEAM GUARD RAILING
Med	MEDIAN
MGS	MIDWEST GUARDRAIL SYSTEM
MH	MANHOLE
Min	MINIMUM
Misc	MISCELLANEOUS
Misc I & S	MISCELLANEOUS IRON AND STEEL
Mkr	MARKER
Mod	MODIFIED,
	MODIFY
Mon	MONUMENT
MP	METAL PLATE
MPGR	METAL PLATE GUARD RAILING
MR	MOVEMENT RATING
MSE	MECHANICALLY STABILIZED EMBANKMENT
Mt	MOUNTAIN, MOUNT
Mtl	MATERIAL
MVP	MAINTENANCE VEHICLE PULLOUT

N

N	NORTH
NB	NORTHBOUND
No.	NUMBER (MUST HAVE PERIOD)
Nos.	NUMBERS (MUST HAVE PERIOD)
NPS	NOMINAL PIPE SIZE
NS	NEAR SIDE
NSP	NEW STANDARD PLAN
NTS	NOT TO SCALE

O

Oblr	OBLITERATE
OC	OVERCROSSING
OD	OUTSIDE DIAMETER
OF	OUTSIDE FACE
OG	ORIGINAL GROUND
OGAC	OPEN GRADED ASPHALT CONCRETE
OGFC	OPEN GRADED FRICTION COURSE
OH	OVERHEAD
OHWM	ORDINARY HIGH WATER MARK
O-O	OUT TO OUT
Opp	OPPOSITE
OSD	OVERSIDE DRAIN

P

p	PAGE
PAP	PERFORATED ALUMINUM PIPE
PB	PULL BOX
PC	POINT OF CURVATURE,
	PRECAST
PCC	POINT OF COMPOUND CURVE,
	PORTLAND CEMENT CONCRETE
PCMS	PORTABLE CHANGEABLE MESSAGE SIGN
PCP	PERFORATED CONCRETE PIPE,
	PRESTRESSED CONCRETE PIPE
PCVC	POINT OF COMPOUND VERTICAL CURVE
PEC	PERMIT TO ENTER AND CONSTRUCT
Ped	PEDESTRIAN
Ped OC	PEDESTRIAN OVERCROSSING
Ped UC	PEDESTRIAN UNDERCROSSING
Perm Mtl	PERMEABLE MATERIAL

P continued

PG	PROFILE GRADE
PI	POINT OF INTERSECTION
PJP	PARTIAL JOINT PENETRATION
Pkwy	PARKWAY
ℙ,PL	PLATE
P/L	PROPERTY LINE
PM	POST MILE,
	TIME FROM NOON TO MIDNIGHT
PN	PAVING NOTCH
POC	POINT OF HORIZONTAL CURVE
POT	POINT OF TANGENT
POVC	POINT OF VERTICAL CURVE
PP	PIPE PILE,
	PLASTIC PIPE,
	POWER POLE
PPL	PREFORMED PERMEABLE LINER
PPP	PERFORATED PLASTIC PIPE
PRC	POINT OF REVERSE CURVE
PRF	PAVEMENT REINFORCING FABRIC
PRVC	POINT OF REVERSE VERTICAL CURVE
PS&E	PLANS, SPECIFICATIONS AND ESTIMATES
PS, P/S	PRESTRESSED
PSP	PERFORATED STEEL PIPE
PT	POINT OF TANGENCY
PVC	POLYVINYL CHLORIDE
Pvmt	PAVEMENT

Q

Qty	QUANTITY

R

R	RADIUS
R & D	REMOVE AND DISPOSE
R & S	REMOVE AND SALVAGE
R/C	RATE OF CHANGE
RCA	REINFORCED CONCRETE ARCH
RCB	REINFORCED CONCRETE BOX
RCP	REINFORCED CONCRETE PIPE
RCPA	REINFORCED CONCRETE PIPE ARCH
Rd	ROAD
Reinf	REINFORCED,
	REINFORCEMENT,
	REINFORCING
Rel	RELOCATE
Repl	REPLACEMENT
Ret	RETAINING
Rev	REVISED, REVISION
Rdwy	ROADWAY
RHMA	RUBBERIZED HOT MIX ASPHALT
Riv	RIVER
RM	ROAD-MIXED
RP	RADIUS POINT,
	REFERENCE POINT
RR	RAILROAD
RSP	ROCK SLOPE PROTECTION,
	REVISED STANDARD PLAN
Rt	RIGHT
Rte	ROUTE
RW	REDWOOD,
	RETAINING WALL
R/W	RIGHT OF WAY
Rwy	RAILWAY

S

S	SOUTH,
	SUPPLEMENT
SAE	STRUCTURE APPROACH EMBANKMENT
Salv	SALVAGE
SAPP	STRUCTURAL ALUMINUM PLATE PIPE
SB	SOUTHBOUND
SC	SAND CUSHION
SCSP	SLOTTED CORRUGATED STEEL PIPE
SD	STORM DRAIN
Sec	SECOND,
	SECTION
Sep	SEPARATION
SG	SUBGRADE
Shld	SHOULDER
Sht	SHEET
Sim	SIMILAR
₤	STATION LINE
SM	SELECTED MATERIAL
Spec	SPECIAL,
	SPECIFICATIONS
SPP	SLOTTED PLASTIC PIPE
SS	SLOPE STAKE
SSBM	STRAP AND SADDLE BRACKET METHOD
SSD	STRUCTURAL SECTION DRAIN
SSPA	STRUCTURAL STEEL PLATE ARCH
SSPP	STRUCTURAL STEEL PLATE PIPE
SSPPA	STRUCTURAL STEEL PLATE PIPE ARCH
SSRP	STEEL SPIRAL RIB PIPE
St	STREET
Sta	STATION
STBB	SINGLE THRIE BEAM BARRIER
Std	STANDARD
Str	STRUCTURE
Surf	SURFACING
SW	SIDEWALK,
	SOUND WALL
Swr	SEWER
Sym	SYMMETRICAL
S4S	SURFACE 4 SIDES

T

T	SEMI-TANGENT
Tan	TANGENT
TBB	THRIE BEAM BARRIER
Tbr	TIMBER
TC	TOP OF CURB
TCB	TRAFFIC CONTROL BOX
TCE	TEMPORARY CONSTRUCTION EASEMENT
Tel	TELEPHONE
Temp	TEMPORARY
TG	TOP OF GRADE
Tot	TOTAL
TP	TELEPHONE POLE
TPB	TREATED PERMEABLE BASE
TPM	TREATED PERMEABLE MATERIAL
Trans	TRANSITION

T continued

TS	TRANSVERSE,
	TRAFFIC SIGNAL,
	TUBULAR STEEL
Typ	TYPICAL

U

UC	UNDERCROSSING
UD	UNDERDRAIN
UG	UNDERGROUND
UON	UNLESS OTHERWISE NOTED
UP	UNDERPASS

V

V	VALVE,
	DESIGN SPEED
Var	VARIABLE,
	VARIES
VC	VERTICAL CURVE
VCP	VITRIFIED CLAY PIPE
Vert	VERTICAL
Via	VIADUCT
Vol	VOLUME

W

W	WEST,
	WIDTH
WB	WESTBOUND
WH	WEEP HOLE
WM	WIRE MESH
WS	WATER SURFACE
WSP	WELDED STEEL PIPE
Wt	WEIGHT
WV	WATER VALVE
WW	WINGWALL
WWLOL	WINGWALL LAYOUT LINE

X

X Sec	CROSS SECTION
Xing	CROSSING

Y

Yr	YEAR
Yrs	YEARS

Dist	COUNTY	ROUTE	POST MILES TOTAL PROJECT	SHEET No.	TOTAL SHEETS
01	Hum	101	111.3/111.7	26	83

Grace M. Tsushima
REGISTERED CIVIL ENGINEER

July 19, 2013
PLANS APPROVAL DATE

REGISTERED PROFESSIONAL ENGINEER Grace M. Tsushima No. C49814 Exp. 9-30-14 CIVIL STATE OF CALIFORNIA

THE STATE OF CALIFORNIA OR ITS OFFICERS OR AGENTS SHALL NOT BE RESPONSIBLE FOR THE ACCURACY OR COMPLETENESS OF SCANNED COPIES OF THIS PLAN SHEET.

TO ACCOMPANY PLANS DATED 06-20-16

UNIT OF MEASUREMENT SYMBOLS:

Some of the symbols used in the project plan quantity tables and in the Bid Item List are:

TABLE A

SYMBOL USED	DEFINITIONS
ACRE	ACRE
CF	CUBIC FOOT
CY	CUBIC YARD
EA	EACH
GAL	GALLON
LB	POUND
LF	LINEAR FOOT
SQFT	SQUARE FOOT
SQYD	SQUARE YARD
STA	100 FEET
TAB	TABLET
TON	2,000 POUNDS

Some of the symbols used in the plans other than in the project plan quantity tables are:

TABLE B

SYMBOL USED	DEFINITIONS
ksi	KIPS PER SQUARE INCH
ksf	KIPS PER SQUARE FOOT
psi	POUNDS PER SQUARE INCH
psf	POUNDS PER SQUARE FOOT
lb/ft^3, pcf	POUNDS PER CUBIC FOOT
tsf	TONS PER SQUARE FOOT
mph, MPH *	MILES PER HOUR
ø	NOMINAL DIAMETER
oz	OUNCE
lb	POUND
kip	1,000 POUNDS
cal	CALORIE
ft	FOOT OR FEET
gal	GALLON

* For use on a sign panel only

STATE OF CALIFORNIA
DEPARTMENT OF TRANSPORTATION

ABBREVIATIONS (SHEET 2 OF 2)

NO SCALE

RSP A10B DATED JULY 19, 2013 SUPERSEDES STANDARD PLAN A10B DATED MAY 20, 2011 - PAGE 2 OF THE STANDARD PLANS BOOK DATED 2010.

REVISED STANDARD PLAN RSP A10B

2010 REVISED STANDARD PLAN RSP A10B

26-JUL-2016 09:49

P:\PROJ\01\0B430\drafting\sheets\0112000127va001.dgn

6-7-13

REFERENCE: CALTRANS SOIL & ROCK LOGGING, CLASSIFICATION, AND PRESENTATION MANUAL (2010)

Dist	COUNTY	ROUTE	POST MILES TOTAL PROJECT	SHEET No.	TOTAL SHEETS
01	Hum	101	111.3/111.7	27	83

CERTIFIED ENGINEERING GEOLOGIST

October 30, 2015
PLANS APPROVAL DATE

REGISTERED GEOLOGIST
CHRIS A. RISDEN
CERTIFIED ENGINEERING GEOLOGIST
No. 2541
Exp. 9-30-17
STATE OF CALIFORNIA

THE STATE OF CALIFORNIA OR ITS OFFICERS OR AGENTS SHALL NOT BE RESPONSIBLE FOR THE ACCURACY OR COMPLETENESS OF SCANNED COPIES OF THIS PLAN SHEET.

TO ACCOMPANY PLANS DATED 06-20-16

ABBREVIATION:

GWS = Ground Water Surface

CEMENTATION

DESCRIPTION	CRITERIA
WEAK	CRUMBLES OR BREAKS WITH HANDLING OR LITTLE FINGER PRESSURE.
MODERATE	CRUMBLES OR BREAKS WITH CONSIDERABLE FINGER PRESSURE.
STRONG	WILL NOT CRUMBLE OR BREAK WITH FINGER PRESSURE.

BOREHOLE IDENTIFICATION

SYMBOL	HOLE TYPE	DESCRIPTION
Size	A	AUGER BORING (HOLLOW OR SOLID STEM BUCKET)
Size	R	ROTARY DRILLED BORING (CONVENTIONAL)
	RW	ROTARY DRILLED WITH SELF-CASING WIRE-LINE
	RC	ROTARY CORE WITH CONTINUOUSLY-SAMPLED, SELF-CASING WIRE-LINE
	P	ROTARY PERCUSSION BORING (AIR)
Size	R	ROTARY DRILLED DIAMOND CORE
	RC	ROTARY DRILLED DIAMOND CORE, CONTINUOUSLY SAMPLED
Size	HD	HAND DRIVEN (1-INCH SOIL TUBE)
	HA	HAND AUGER
●	D	DYNAMIC CONE PENETRATION BORING
▲	CPT	CONE PENETRATION TEST (ASTM D 5778)
[ ]	O	OTHER (NOTE ON LOTB)

Note: Size in inches.

CONSISTENCY OF COHESIVE SOILS

DESCRIPTION	SHEAR STRENGTH (tsf)	POCKET PENETROMETER MEASUREMENT, PP, (tsf)	TORVANE MEASUREMENT, TV, (tsf)	VANE SHEAR MEASUREMENT, VS, (tsf)
VERY SOFT	LESS THAN 0.12	LESS THAN 0.25	LESS THAN 0.12	LESS THAN 0.12
SOFT	0.12 - 0.25	0.25 - 0.5	0.12 - 0.25	0.12 - 0.25
MEDIUM STIFF	0.25 - 0.5	0.5 - 1	0.25 - 0.5	0.25 - 0.5
STIFF	0.5 - 1	1 - 2	0.5 - 1	0.5 - 1
VERY STIFF	1 - 2	2 - 4	1 - 2	1 - 2
HARD	GREATER THAN 2	GREATER THAN 4	GREATER THAN 2	GREATER THAN 2

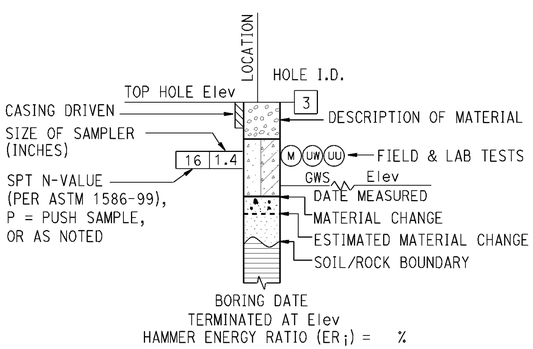

ROTARY BORING

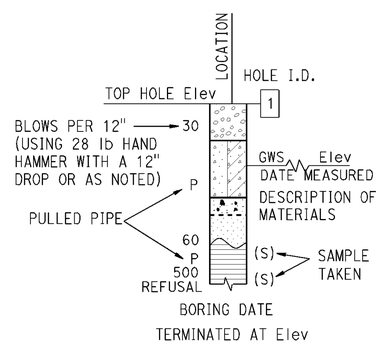

HAND BORING

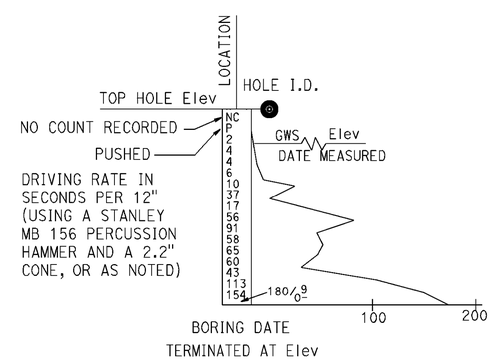

DYNAMIC CONE PENETRATION BORING

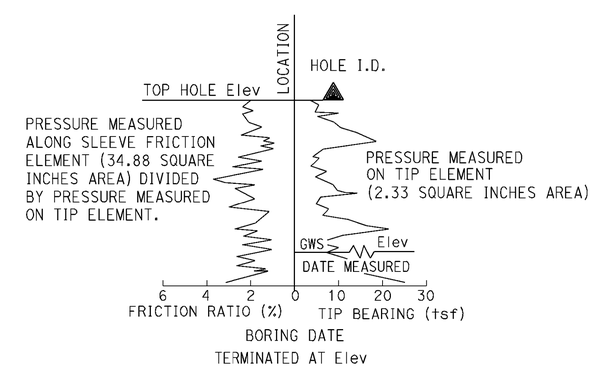

CONE PENETRATION TEST (CPT) BORING

STATE OF CALIFORNIA
DEPARTMENT OF TRANSPORTATION

LEGEND - SOIL (SHEET 1 OF 2)

NO SCALE

RSP A10F DATED OCTOBER 30, 2015 SUPERSEDES STANDARD PLAN A10F DATED MAY 20, 2011 - PAGE 6 OF THE STANDARD PLANS BOOK DATED 2010.

REVISED STANDARD PLAN RSP A10F

2010 REVISED STANDARD PLAN RSP A10F

26-JUL-2016 09:49

P:\PROJ\01\0B430\drafting\sheets\0112000127va002.dgn

8-18-15

REFERENCE: CALTRANS SOIL & ROCK LOGGING, CLASSIFICATION, AND PRESENTATION MANUAL (2010)

Dist	COUNTY	ROUTE	POST MILES TOTAL PROJECT	SHEET No.	TOTAL SHEETS
01	Hum	101	111.3/111.7	28	83

CERTIFIED ENGINEERING GEOLOGIST

October 30, 2015
PLANS APPROVAL DATE

REGISTERED GEOLOGIST
CHRIS A. RISDEN
CERTIFIED ENGINEERING GEOLOGIST
No. 2541
Exp. 2-30-17
STATE OF CALIFORNIA

THE STATE OF CALIFORNIA OR ITS OFFICERS OR AGENTS SHALL NOT BE RESPONSIBLE FOR THE ACCURACY OR COMPLETENESS OF SCANNED COPIES OF THIS PLAN SHEET.

TO ACCOMPANY PLANS DATED 06-20-16

GROUP SYMBOLS AND NAMES

GRAPHIC/SYMBOL	GROUP NAMES	GRAPHIC/SYMBOL	GROUP NAMES
GW	WELL-GRADED GRAVEL WELL-GRADED GRAVEL WITH SAND	CL	LEAN CLAY LEAN CLAY WITH SAND LEAN CLAY WITH GRAVEL SANDY LEAN CLAY SANDY LEAN CLAY WITH GRAVEL GRAVELLY LEAN CLAY GRAVELLY LEAN CLAY WITH SAND
GP	POORLY-GRADED GRAVEL POORLY-GRADED GRAVEL WITH SAND		
GW-GM	WELL-GRADED GRAVEL WITH SILT WELL-GRADED GRAVEL WITH SILT AND SAND	CL-ML	SILTY CLAY SILTY CLAY WITH SAND SILTY CLAY WITH GRAVEL SANDY SILTY CLAY SANDY SILTY CLAY WITH GRAVEL GRAVELLY SILTY CLAY GRAVELLY SILTY CLAY WITH SAND
GW-GC	WELL-GRADED GRAVEL WITH CLAY (OR SILTY CLAY) WELL-GRADED GRAVEL WITH CLAY AND SAND (OR SILTY CLAY AND SAND)		
GP-GM	POORLY-GRADED GRAVEL WITH SILT POORLY-GRADED GRAVEL WITH SILT AND SAND	ML	SILT SILT WITH SAND SILT WITH GRAVEL SANDY SILT SANDY SILT WITH GRAVEL GRAVELLY SILT GRAVELLY SILT WITH SAND
GP-GC	POORLY-GRADED GRAVEL WITH CLAY (OR SILTY CLAY) POORLY-GRADED GRAVEL WITH CLAY AND SAND (OR SILTY CLAY AND SAND)		
GM	SILTY GRAVEL SILTY GRAVEL WITH SAND	OL	ORGANIC LEAN CLAY ORGANIC LEAN CLAY WITH SAND ORGANIC LEAN CLAY WITH GRAVEL SANDY ORGANIC LEAN CLAY SANDY ORGANIC LEAN CLAY WITH GRAVEL GRAVELLY ORGANIC LEAN CLAY GRAVELLY ORGANIC LEAN CLAY WITH SAND
GC	CLAYEY GRAVEL CLAYEY GRAVEL WITH SAND		
GC-GM	SILTY, CLAYEY GRAVEL SILTY, CLAYEY GRAVEL WITH SAND	OL	ORGANIC SILT ORGANIC SILT WITH SAND ORGANIC SILT WITH GRAVEL SANDY ORGANIC SILT SANDY ORGANIC SILT WITH GRAVEL GRAVELLY ORGANIC SILT GRAVELLY ORGANIC SILT WITH SAND
SW	WELL-GRADED SAND WELL-GRADED SAND WITH GRAVEL		
SP	POORLY-GRADED SAND POORLY-GRADED SAND WITH GRAVEL	CH	FAT CLAY FAT CLAY WITH SAND FAT CLAY WITH GRAVEL SANDY FAT CLAY SANDY FAT CLAY WITH GRAVEL GRAVELLY FAT CLAY GRAVELLY FAT CLAY WITH SAND
SW-SM	WELL-GRADED SAND WITH SILT WELL-GRADED SAND WITH SILT AND GRAVEL		
SW-SC	WELL-GRADED SAND WITH CLAY (OR SILTY CLAY) WELL-GRADED SAND WITH CLAY AND GRAVEL (OR SILTY CLAY AND GRAVEL)	MH	ELASTIC SILT ELASTIC SILT WITH SAND ELASTIC SILT WITH GRAVEL SANDY ELASTIC SILT SANDY ELASTIC SILT WITH GRAVEL GRAVELLY ELASTIC SILT GRAVELLY ELASTIC SILT WITH SAND
SP-SM	POORLY-GRADED SAND WITH SILT POORLY-GRADED SAND WITH SILT AND GRAVEL		
SP-SC	POORLY-GRADED SAND WITH CLAY (OR SILTY CLAY) POORLY-GRADED SAND WITH CLAY AND GRAVEL (OR SILTY CLAY AND GRAVEL)	OH	ORGANIC FAT CLAY ORGANIC FAT CLAY WITH SAND ORGANIC FAT CLAY WITH GRAVEL SANDY ORGANIC FAT CLAY SANDY ORGANIC FAT CLAY WITH GRAVEL GRAVELLY ORGANIC FAT CLAY GRAVELLY ORGANIC FAT CLAY WITH SAND
SM	SILTY SAND SILTY SAND WITH GRAVEL		
SC	CLAYEY SAND CLAYEY SAND WITH GRAVEL	OH	ORGANIC ELASTIC SILT ORGANIC ELASTIC SILT WITH SAND ORGANIC ELASTIC SILT WITH GRAVEL SANDY ORGANIC ELASTIC SILT SANDY ORGANIC ELASTIC SILT WITH GRAVEL GRAVELLY ORGANIC ELASTIC SILT GRAVELLY ORGANIC ELASTIC SILT WITH SAND
SC-SM	SILTY, CLAYEY SAND SILTY, CLAYEY SAND WITH GRAVEL		
PT	PEAT	OL/OH	ORGANIC SOIL ORGANIC SOIL WITH SAND ORGANIC SOIL WITH GRAVEL SANDY ORGANIC SOIL SANDY ORGANIC SOIL WITH GRAVEL GRAVELLY ORGANIC SOIL GRAVELLY ORGANIC SOIL WITH SAND
	COBBLES COBBLES AND BOULDERS BOULDERS		

FIELD AND LABORATORY TESTING

- (C) CONSOLIDATION (ASTM D2435)
- (CL) COLLAPSE POTENTIAL (ASTM D4546)
- (CP) COMPACTION CURVE (CTM 216)
- (CR) CORROSIVITY TESTING (CTM 643, CTM 422, CTM 417)
- (CU) CONSOLIDATED UNDRAINED TRIAXIAL (ASTM D4767)
- (DS) DIRECT SHEAR (ASTM D3080)
- (EI) EXPANSION INDEX (ASTM D4829)
- (M) MOISTURE CONTENT (ASTM D2216)
- (OC) ORGANIC CONTENT-% (ASTM D2974)
- (P) PERMEABILITY (CTM 220)
- (PA) PARTICLE SIZE ANALYSIS (ASTM D422)
- (PI) PLASTICITY INDEX (AASHTO T 90) LIQUID LIMIT (AASHTO T 89)
- (PL) POINT LOAD INDEX (ASTM D5731)
- (PM) PRESSURE METER
- (R) R-VALUE (CTM 301)
- (SE) SAND EQUIVALENT (CTM 217)
- (SG) SPECIFIC GRAVITY (AASHTO T 100)
- (SL) SHRINKAGE LIMIT (ASTM D4943)
- (SW) SWELL POTENTIAL (ASTM D4546)
- (UC) UNCONFINED COMPRESSION-SOIL (ASTM D2166) UNCONFINED COMPRESSION-ROCK (ASTM D7012 - METHOD C)
- (UU) UNCONSOLIDATED UNDRAINED TRIAXIAL (ASTM D2850)
- (UW) UNIT WEIGHT (ASTM D7263 - METHOD B)

APPARENT DENSITY OF COHESIONLESS SOILS

DESCRIPTION	SPT N_{60} (BLOWS / 12 INCHES)
VERY LOOSE	0 - 5
LOOSE	5 - 10
MEDIUM DENSE	10 - 30
DENSE	30 - 50
VERY DENSE	GREATER THAN 50

MOISTURE

DESCRIPTION	CRITERIA
DRY	NO DISCERNABLE MOISTURE
MOIST	MOISTURE PRESENT, BUT NO FREE WATER
WET	VISIBLE FREE WATER

PERCENT OR PROPORTION OF SOILS

DESCRIPTION	CRITERIA
TRACE	PARTICLES ARE PRESENT BUT ESTIMATED TO BE LESS THAN 5%
FEW	5% - 10%
LITTLE	15% - 25%
SOME	30% - 45%
MOSTLY	50% - 100%

PARTICLE SIZE

DESCRIPTION		SIZE
BOULDER		GREATER THAN 12"
COBBLE		3" - 12"
GRAVEL	COARSE	3/4" - 3"
	FINE	1/5" - 3/4"
SAND	COARSE	1/16" - 1/5"
	MEDIUM	1/64" - 1/16"
	FINE	1/300" - 1/64"
SILT AND CLAY		LESS THAN 1/300"

STATE OF CALIFORNIA
DEPARTMENT OF TRANSPORTATION

LEGEND - SOIL (SHEET 2 OF 2)

NO SCALE

RSP A10G DATED OCTOBER 30, 2015 SUPERSEDES STANDARD PLAN A10G DATED MAY 20, 2011 - PAGE 7 OF THE STANDARD PLANS BOOK DATED 2010.

REVISED STANDARD PLAN RSP A10G

2010 REVISED STANDARD PLAN RSP A10G

26-JUL-2016
09:49

P:\PROJ\01\0B430\drafting\sheets\0112000127va003.dgn

9-22-15

Dist	COUNTY	ROUTE	POST MILES TOTAL PROJECT	SHEET No.	TOTAL SHEETS
01	Hum	101	111.3/111.7	29	83

REGISTERED CIVIL ENGINEER

July 20, 2012
PLANS APPROVAL DATE

REGISTERED PROFESSIONAL ENGINEER
Roberta L. McLaughlin
No. C40375
Exp. 3-31-13
CIVIL
STATE OF CALIFORNIA

THE STATE OF CALIFORNIA OR ITS OFFICERS OR AGENTS SHALL NOT BE RESPONSIBLE FOR THE ACCURACY OR COMPLETENESS OF SCANNED COPIES OF THIS PLAN SHEET.

TO ACCOMPANY PLANS DATED 06-20-16

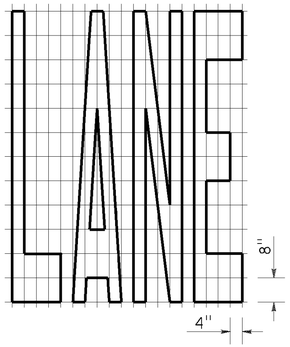

A=24 ft^2

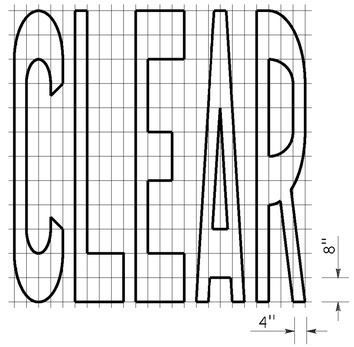

A=27 ft^2

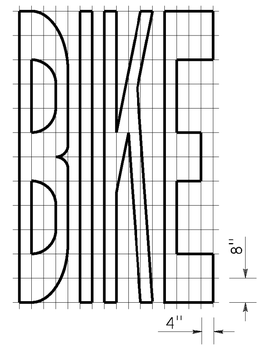

A=21 ft^2

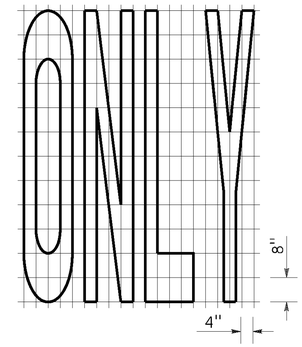

A=22 ft^2

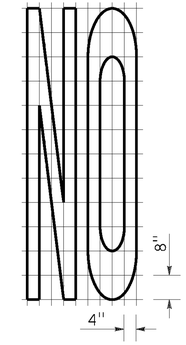

A=14 ft^2

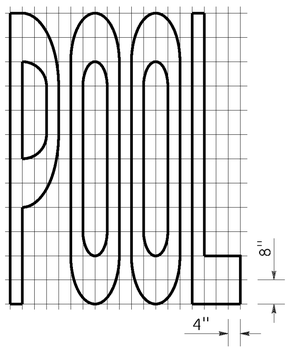

A=23 ft^2

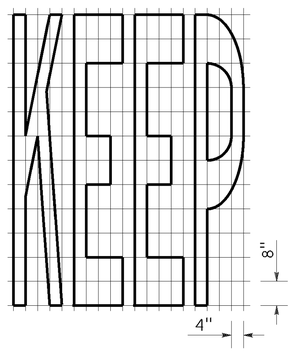

A=24 ft^2

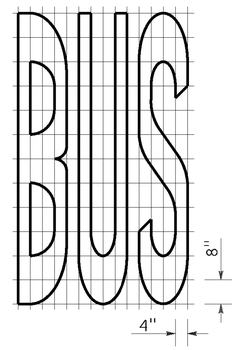

A=20 ft^2

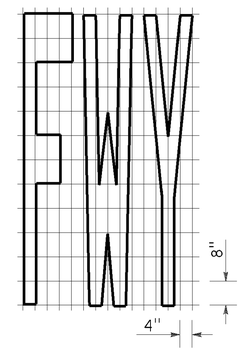

A=16 ft^2

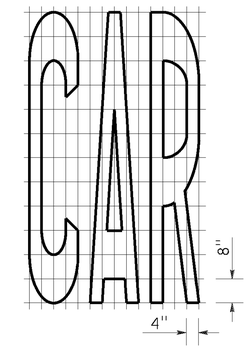

A=17 ft^2

WORD MARKINGS			
ITEM	ft^2	ITEM	ft^2
LANE	24	NO	14
POOL	23	BIKE	21
CAR	17	BUS	20
CLEAR	27	ONLY	22
KEEP	24	FWY	16

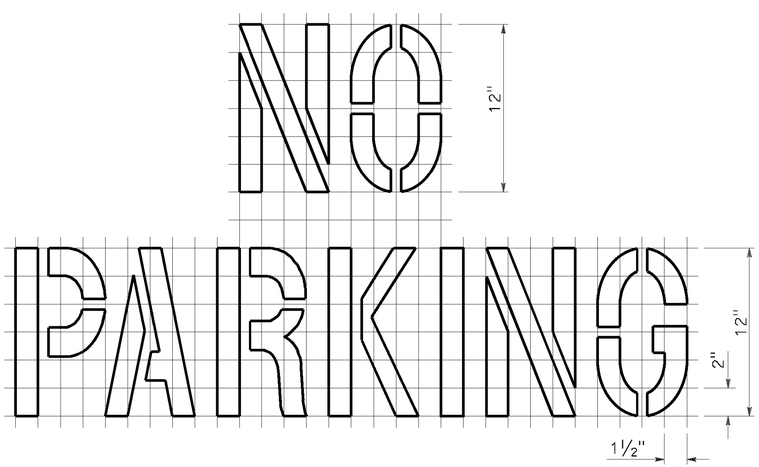

A=2 ft^2

See Notes 6 and 7

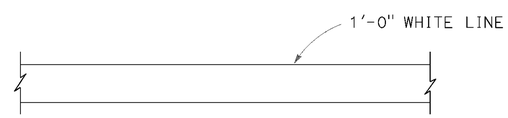

LIMIT LINE (STOP LINE)

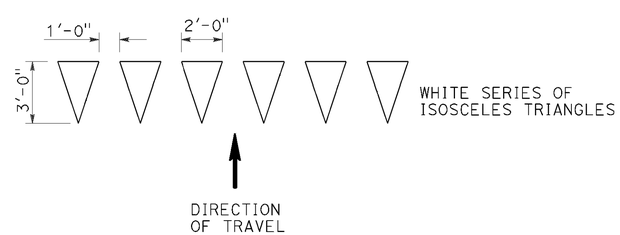

YIELD LINE

NOTES:

1. If a message consists of more than one word, it should read "UP", i.e., the first word should be nearest the driver.
2. The space between words should be at least four times the height of the characters for low speed roads, but not more than ten times the height of the characters. The space may be reduced appropriately where there is limited space because of local conditions.
3. Minor variations in dimensions may be accepted by the Engineer.
4. Portions of a letter, number or symbol may be separated by connecting segments not to exceed 2" in width.
5. The words "NO PARKING" pavement marking is to be used for parking facilities. For typical locations of markings, see Standard Plans A90A and A90B.
6. The words "NO PARKING", shall be painted in white letters no less than 1'-0" high on a contrasting background and located so that it is visible to traffic enforcement officials.

STATE OF CALIFORNIA
DEPARTMENT OF TRANSPORTATION

PAVEMENT MARKINGS WORDS, LIMIT AND YIELD LINES

NO SCALE

RSP A24E DATED JULY 20, 2012 SUPERSEDES STANDARD PLAN A24E DATED MAY 20, 2011 - PAGE 17 OF THE STANDARD PLANS BOOK DATED 2010.

REVISED STANDARD PLAN RSP A24E

2010 REVISED STANDARD PLAN RSP A24E

26-JUL-2016 09:50

P:\PROJ\01\0B430\drafting\sheets\0112000127va004.dgn

6-12-12

Dist	COUNTY	ROUTE	POST MILES TOTAL PROJECT	SHEET No.	TOTAL SHEETS
01	Hum	101	111.3/111.7	30	83

REGISTERED CIVIL ENGINEER

October 30, 2015
PLANS APPROVAL DATE

REGISTERED PROFESSIONAL ENGINEER
Carl M. Duan
No. C59976
Exp. 6-30-16
CIVIL
STATE OF CALIFORNIA

THE STATE OF CALIFORNIA OR ITS OFFICERS OR AGENTS SHALL NOT BE RESPONSIBLE FOR THE ACCURACY OR COMPLETENESS OF SCANNED COPIES OF THIS PLAN SHEET.

TO ACCOMPANY PLANS DATED 06-20-16

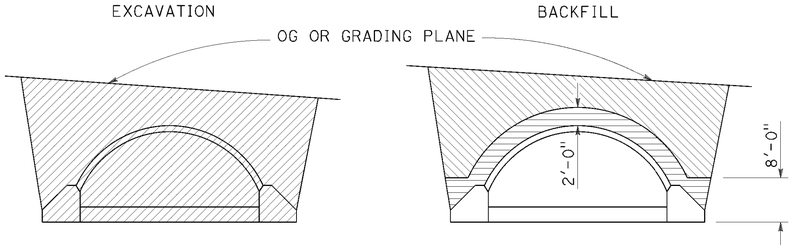

IN TRENCH

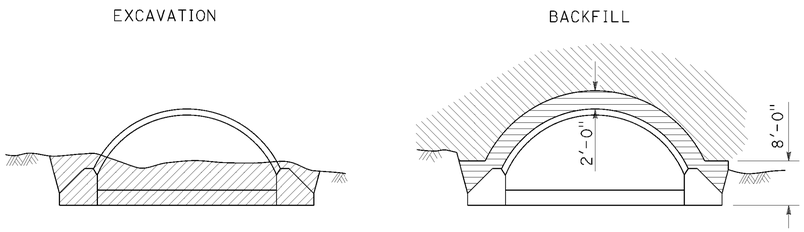

IN EMBANKMENT

STRUCTURAL STEEL PLATE ARCHES

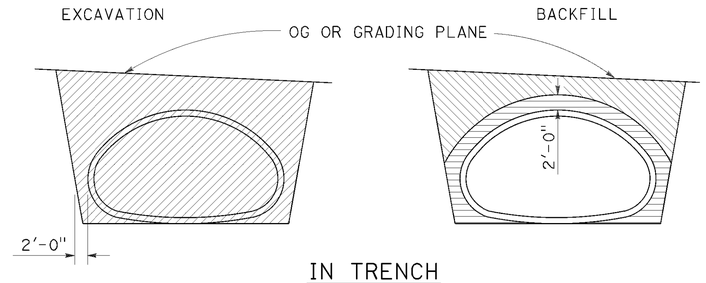

IN TRENCH

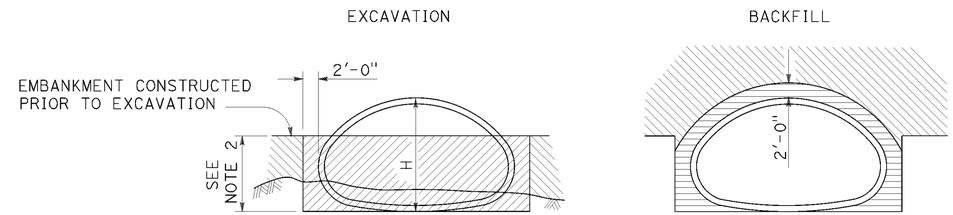

IN EMBANKMENT

STRUCTURAL STEEL PLATE PIPE ARCHES AND VEHICULAR UNDERCROSSING

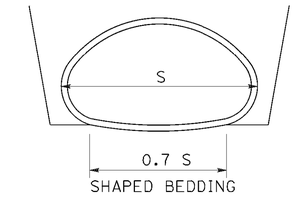

SHAPED BEDDING

S = Larger than 84"

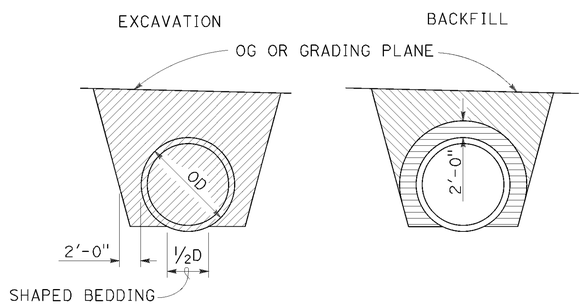

IN TRENCH

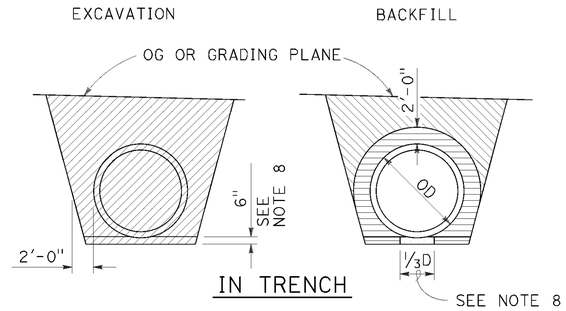

IN TRENCH

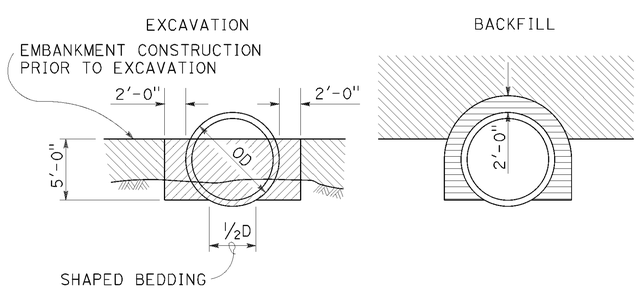

IN EMBANKMENT

PIPES

Larger than 84"

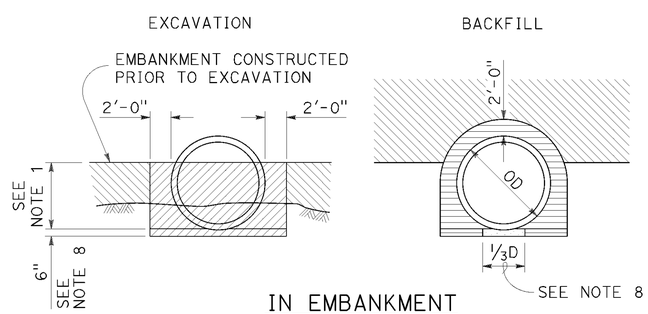

IN EMBANKMENT

METAL AND PLASTIC PIPES AND CORRUGATED METAL PIPE ARCHES

84" or Smaller

NOTES:

1. PIPES: 30" minimum for diameters up to and including 42" then ⅔ diameter but no more than 60" required. CORRUGATED METAL PIPE ARCHES: 30" maximum.
2. ⅔ H up to 60" maximum.
3. Slope or shore excavation sides as necessary.
4. Backfill shall be placed full width of excavation except as noted.
5. Diagrams do not apply to overside drains.
6. Dimensions shown are minimum.
7. Construction strutting of structural steel plate pipe, arches and vehicular undercrossing to be used when shown on the project plans. When shown, see Standard Plan D88A for strutting requirements.
8. Excavation below pipe and 80% relative compaction requirements for plastic pipes only.
9. D is the inside diameter (ID) of the pipe.

LEGEND

- STRUCTURE EXCAVATION (CULVERT)
- ROADWAY EMBANKMENT
- STRUCTURE BACKFILL (CULVERT) 95% RELATIVE COMPACTION
- STRUCTURE BACKFILL (CULVERT) 80% RELATIVE COMPACTION

STATE OF CALIFORNIA
DEPARTMENT OF TRANSPORTATION

EXCAVATION AND BACKFILL METAL AND PLASTIC CULVERTS

NO SCALE

RSP A62F DATED OCTOBER 30, 2015 SUPERSEDES STANDARD PLAN A62F DATED MAY 20, 2011 - PAGE 26 OF THE STANDARD PLANS BOOK DATED 2010.

REVISED STANDARD PLAN RSP A62F

2010 REVISED STANDARD PLAN RSP A62F

26-JUL-2016
09:50

P:\PROJ\01\0B430\drafting\sheets\0112000127va005.dgn

10-13-15

Dist	COUNTY	ROUTE	POST MILES TOTAL PROJECT	SHEET No.	TOTAL SHEETS
01	Hum	101	111.3/111.7	31	83

REGISTERED CIVIL ENGINEER

January 15, 2016
PLANS APPROVAL DATE

REGISTERED PROFESSIONAL ENGINEER
Michael Janzen
No. 44788
Exp. 3-31-16
CIVIL
STATE OF CALIFORNIA

THE STATE OF CALIFORNIA OR ITS OFFICERS OR AGENTS SHALL NOT BE RESPONSIBLE FOR THE ACCURACY OR COMPLETENESS OF SCANNED COPIES OF THIS PLAN SHEET.

TO ACCOMPANY PLANS DATED 06-20-16

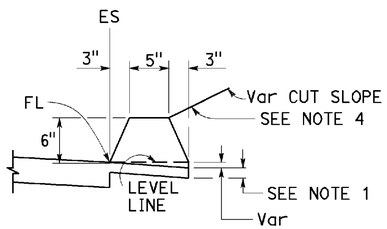

TYPE A
See Notes 3 and 5

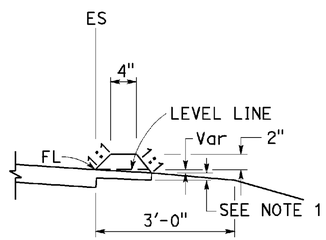

TYPE C

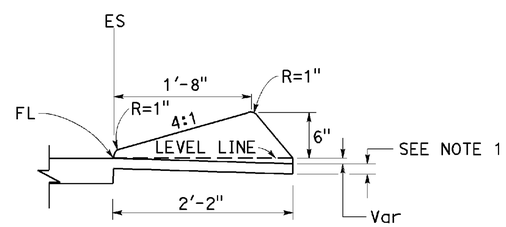

TYPE D

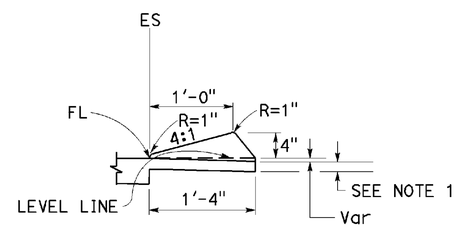

TYPE E

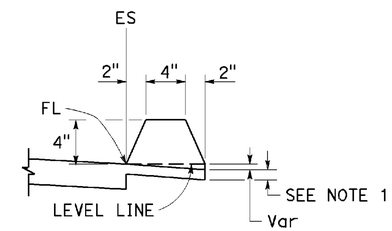

TYPE F
See Note 5

DIKES

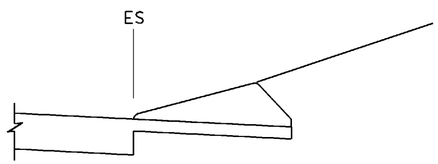

CASE C-1
Cut Slope

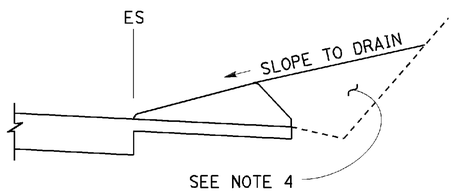

CASE C-2
Cut Slope

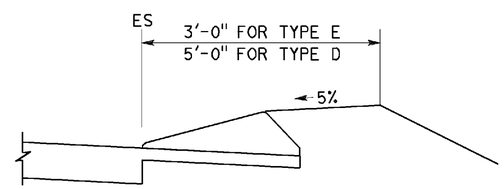

CASE F

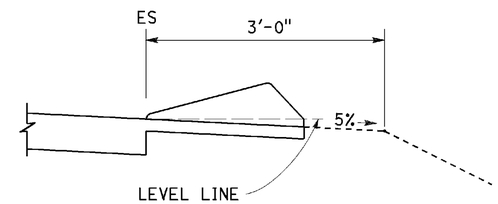

CASE R
See Note 2

TYPE D AND E BACKFILL DETAILS

NOTES:

1. For HMA shoulders only, extend top layer of HMA placed on the shoulder under dike with no joint at the ES. For projects with OGFC shoulders, do not extend OGFC under dike. See project plans for modified dike detail.
2. Case R applies to retrofit only projects where restrictive conditions do not provide enough width for Case F backfill.
3. Type A dike only to be used where restrictive slope conditions do not provide enough width to use Type D or Type E dike.
4. Fill and compact with excavated material to top of dike.
5. Use Type A or F dike, where dike is required with guardrail installations. See Revised Standard Plan RSP A77N4 for dike positioning details. See Revised Standard Plan RSP A77N3 for hinge point offsets with guardrail.

DIKE QUANTITIES

TYPE	CUBIC YARDS PER LINEAR FOOT
A	0.0135
C	0.0038
D	0.0293
E	0.0130
F	0.0066

Quantities based on 5% cross slope.

STATE OF CALIFORNIA
DEPARTMENT OF TRANSPORTATION

HOT MIX ASPHALT DIKES

NO SCALE

RSP A87B DATED JANUARY 15, 2016 SUPERSEDES RSP A87B DATED JULY 19, 2013 AND STANDARD PLAN A87B DATED MAY 20, 2011 - PAGE 120 OF THE STANDARD PLANS BOOK DATED 2010.

REVISED STANDARD PLAN RSP A87B

2010 REVISED STANDARD PLAN RSP A87B

26-JUL-2016
09:50

P:\PROJ\01\08430\drafting\sheets\0112000127va006.dgn

11-17-15

Dist	COUNTY	ROUTE	POST MILES TOTAL PROJECT	SHEET No.	TOTAL SHEETS
01	Hum	101	111.3/111.7	32	83

REGISTERED CIVIL ENGINEER

October 21, 2011
PLANS APPROVAL DATE

REGISTERED PROFESSIONAL ENGINEER
Tillat Satter
No. C42892
Exp. 3-31-12
CIVIL
STATE OF CALIFORNIA

THE STATE OF CALIFORNIA OR ITS OFFICERS OR AGENTS SHALL NOT BE RESPONSIBLE FOR THE ACCURACY OR COMPLETENESS OF SCANNED COPIES OF THIS PLAN SHEET.

TO ACCOMPANY PLANS DATED 06-20-16

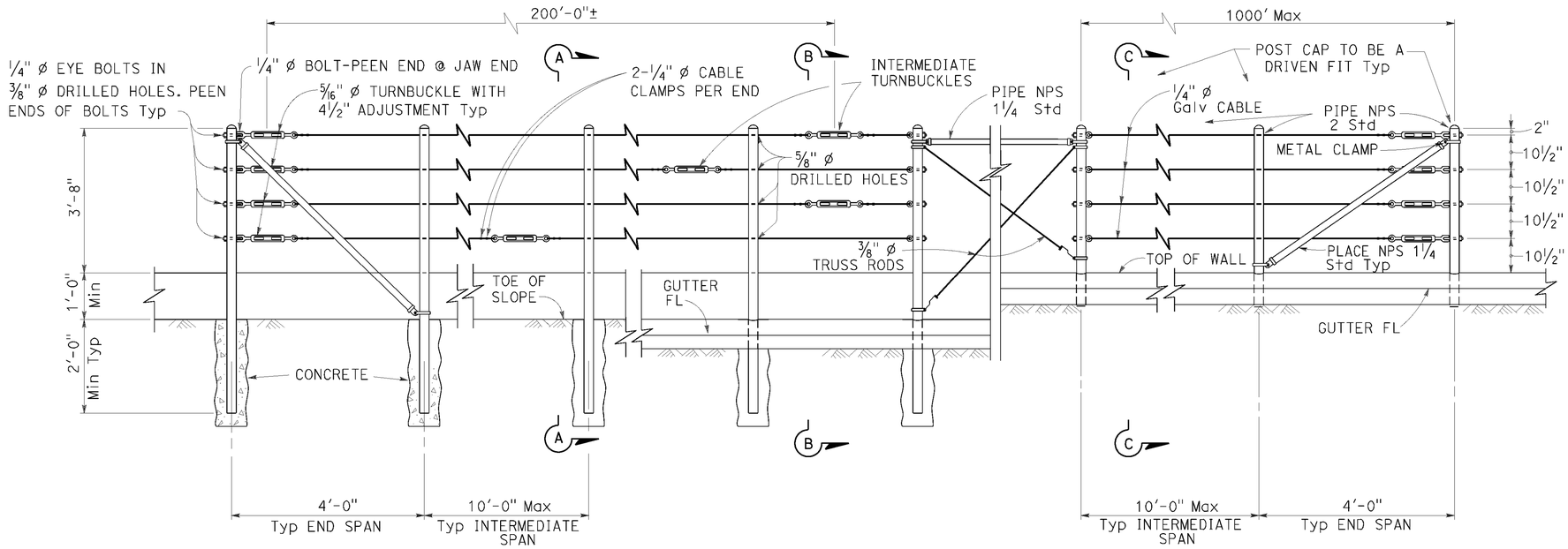

EXISTING WALL (WITHOUT GUTTER)
Existing

RETAINING WALL (WITH GUTTER)
Existing

RETAINING WALL (WITH GUTTER)
New construction

ELEVATION

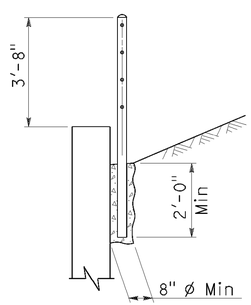

SECTION A-A
Existing

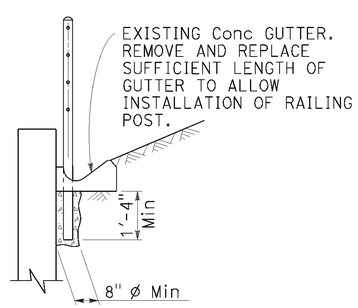

SECTION B-B
Existing

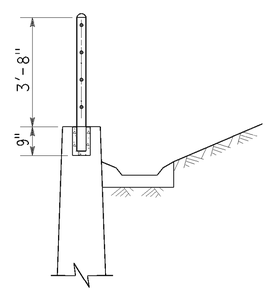

SECTION C-C
New construction

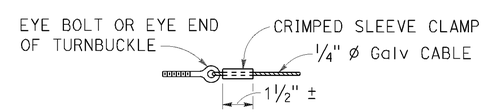

ALTERNATIVE CABLE CONNECTION

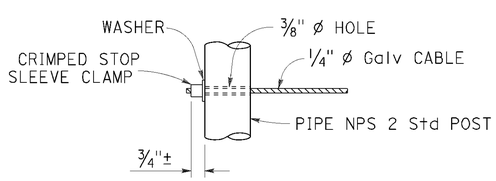

ALTERNATIVE DEAD END ANCHORAGE

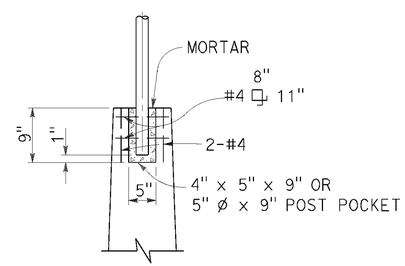

POST POCKET

NOTES:

1. Maximum distance between turnbuckles shall be 200'-0"±.
2. Intermediate turnbuckles to be placed in adjacent spans.
3. Cable shall not be spliced between intermediate turnbuckles and end posts.
4. Posts to be vertical.
5. Alignment of holes in posts may vary to conform to slope of top of retaining wall.
6. The Contractor shall verify all dependent dimensions in the field before ordering or fabricating any material.
7. Line posts shall be braced horizontally and trussed diagonally in both directions at intervals not to exceed 1000'.
8. Post pockets to be centered in top of wall.
9. Typical end spans, braced in both directions, shall be constructed at changes in line where the angle of deflection is 15° or more.
10. Provide thimbles at all cable loops.

STATE OF CALIFORNIA
DEPARTMENT OF TRANSPORTATION

CABLE RAILING

NO SCALE

RSP B11-47 DATED OCTOBER 21, 2011 SUPERSEDES STANDARD PLAN B11-47 DATED MAY 20, 2011 - PAGE 293 OF THE STANDARD PLANS BOOK DATED 2010.

REVISED STANDARD PLAN RSP B11-47

2010 REVISED STANDARD PLAN RSP B11-47

26-JUL-2016 15:51

P:\PROJ\01\0B430\drafting\sheets\0112000127va007.dgn

9-14-11

Dist	COUNTY	ROUTE	POST MILES TOTAL PROJECT	SHEET No.	TOTAL SHEETS
01	Hum	101	111.3/111.7	33	83

REGISTERED CIVIL ENGINEER

April 20, 2012
PLANS APPROVAL DATE

REGISTERED PROFESSIONAL ENGINEER
Tillat Satter
No. C42892
Exp. 3-31-14
CIVIL
STATE OF CALIFORNIA

THE STATE OF CALIFORNIA OR ITS OFFICERS OR AGENTS SHALL NOT BE RESPONSIBLE FOR THE ACCURACY OR COMPLETENESS OF SCANNED COPIES OF THIS PLAN SHEET.

TO ACCOMPANY PLANS DATED 06-20-16

2010 REVISED STANDARD PLAN RSP B11-68

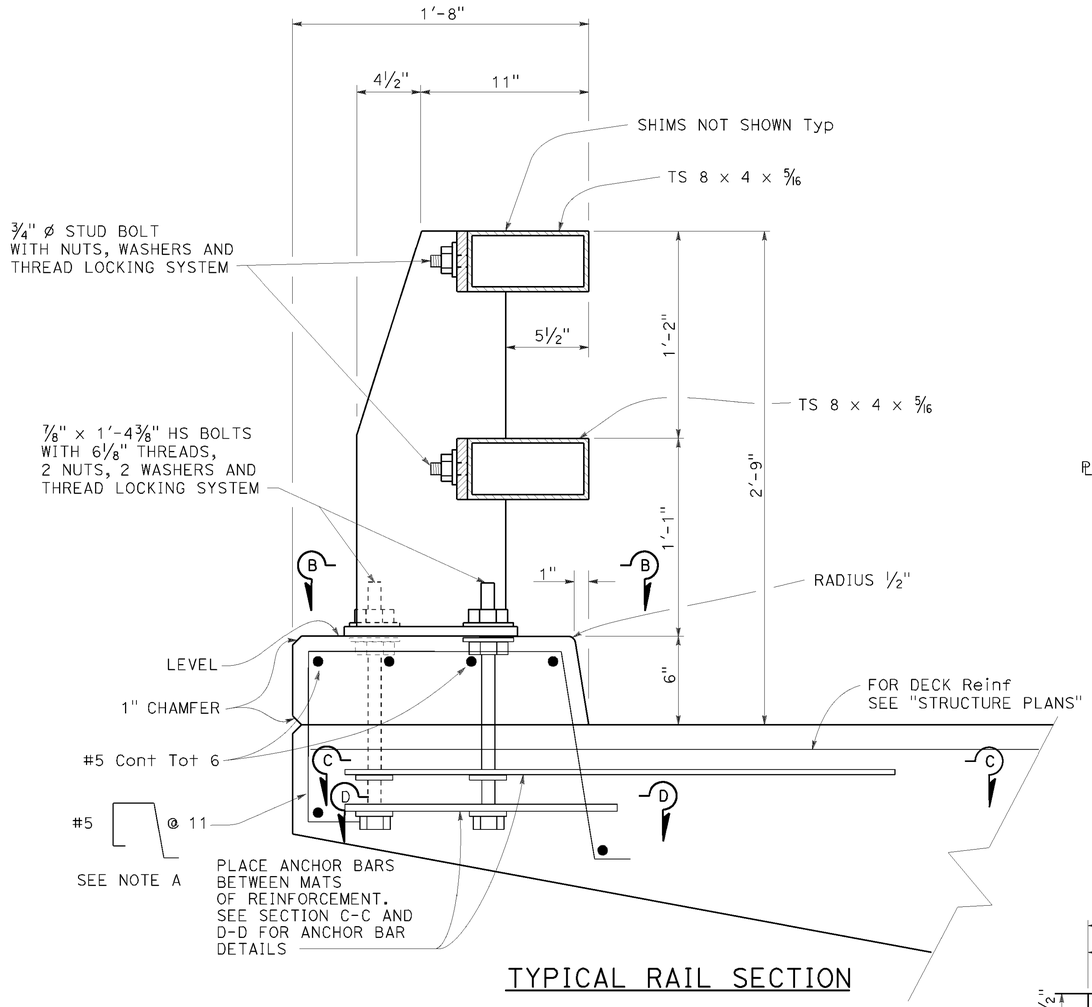

TYPICAL RAIL SECTION

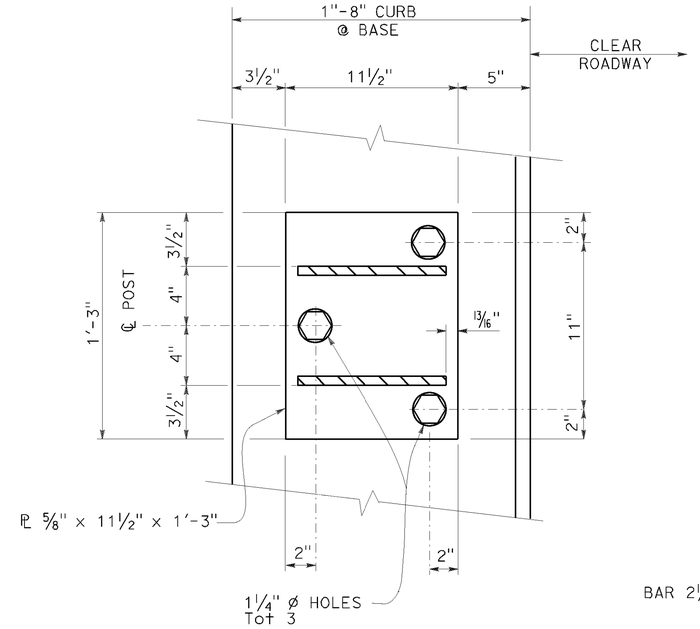

SECTION B-B

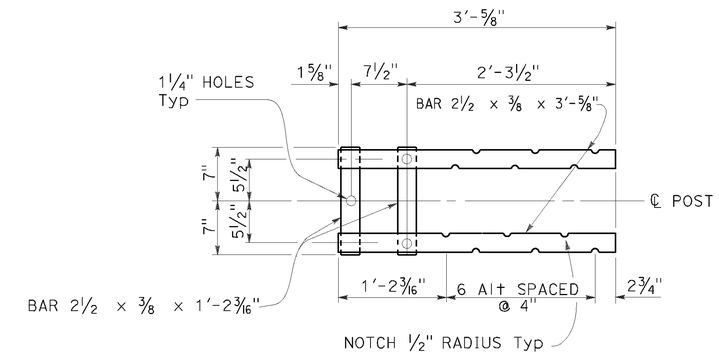

SECTION C-C
Top Anchorage

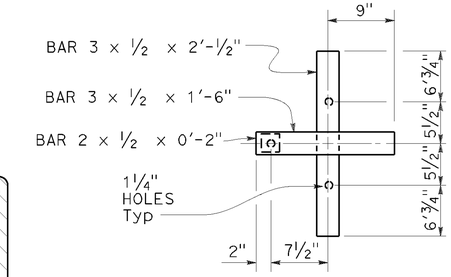

SECTION D-D
Lower Anchorage

NOTE A

Adjust spacing to clear scupper opening by 2" if applicable.

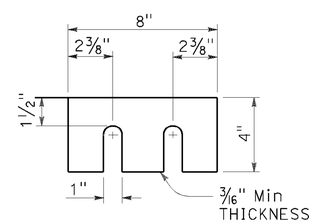

SHIMS REQUIRED FOR
TOP AND BOTTOM RAIL

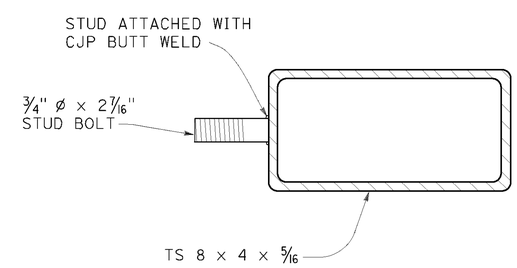

SECTION AT POST

STUD BOLT DETAIL

STATE OF CALIFORNIA
DEPARTMENT OF TRANSPORTATION

CALIFORNIA ST-10 BRIDGE RAIL (SHEET 1 OF 3)

NO SCALE

RSP B11-68 DATED APRIL 20, 2012 SUPERSEDES STANDARD PLAN B11-68
DATED MAY 20, 2011 - PAGE 308 OF THE STANDARD PLANS BOOK DATED 2010.

REVISED STANDARD PLAN RSP B11-68

26-JUL-2016
09:51

P:\PROJ\01\0B430\drafting\sheets\0112000127va008.dgn

3-23-12

Dist	COUNTY	ROUTE	POST MILES TOTAL PROJECT	SHEET No.	TOTAL SHEETS
01	Hum	101	111.3/111.7	34	83

REGISTERED CIVIL ENGINEER

July 19, 2013
PLANS APPROVAL DATE

REGISTERED PROFESSIONAL ENGINEER
Tillat Satter
No. C42892
Exp. 3-31-14
CIVIL
STATE OF CALIFORNIA

THE STATE OF CALIFORNIA OR ITS OFFICERS OR AGENTS SHALL NOT BE RESPONSIBLE FOR THE ACCURACY OR COMPLETENESS OF SCANNED COPIES OF THIS PLAN SHEET.

TO ACCOMPANY PLANS DATED 06-20-16

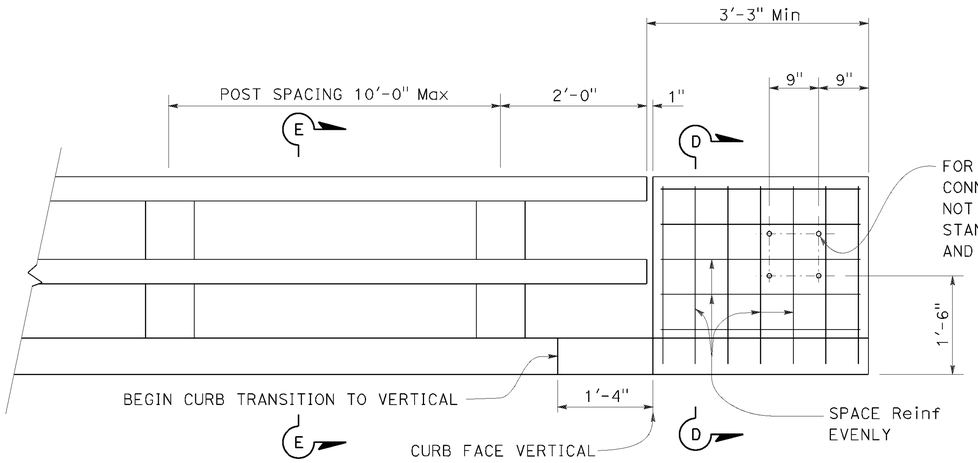

END OF RAILING ELEVATION

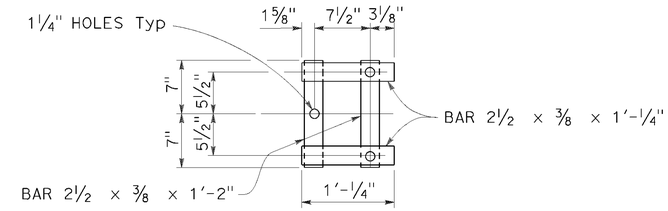

WALL ANCHOR PLATE DETAIL

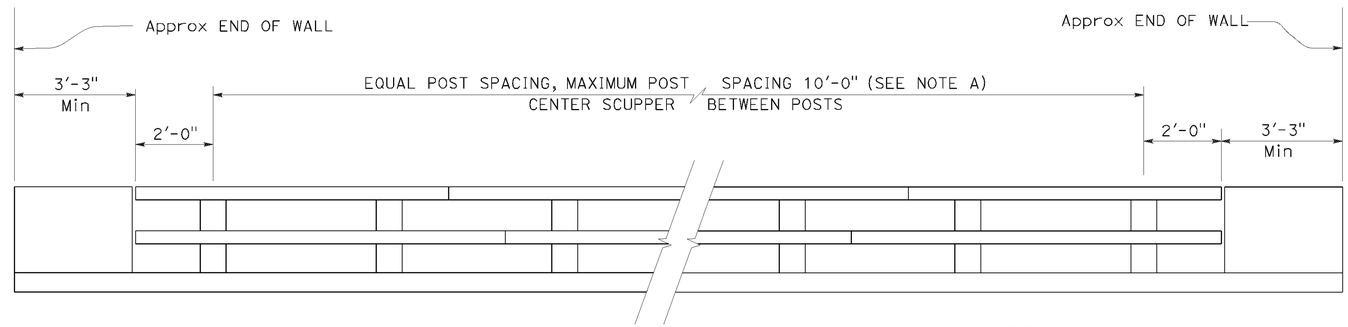

BRIDGE RAILING ELEVATION

NOTE A:

Post spacing and/or block length to be adjusted to fit bridge length or wingwall length.

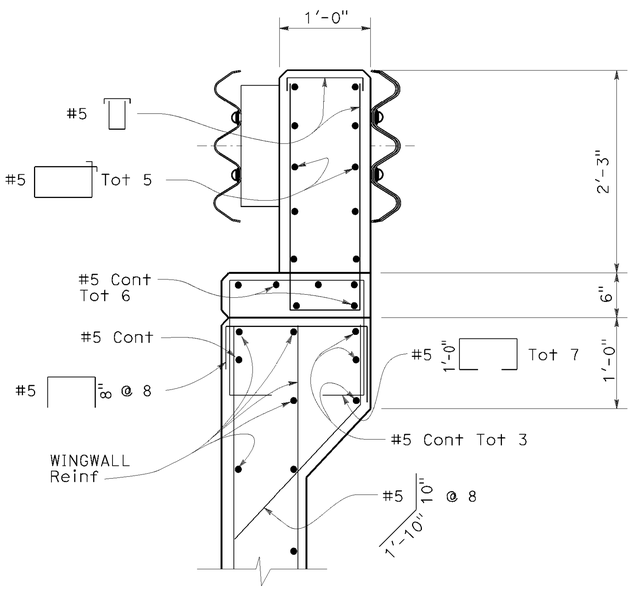

SECTION D-D

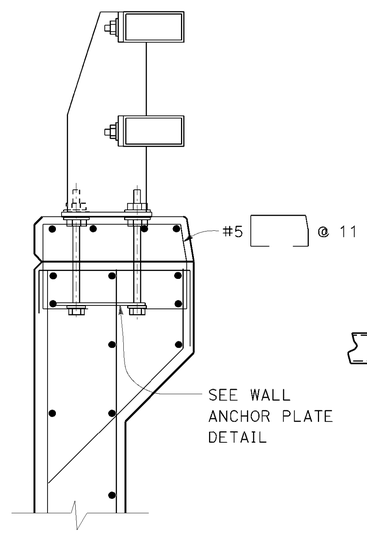

SECTION E-E

Reinf same as for Section D-D except as noted.

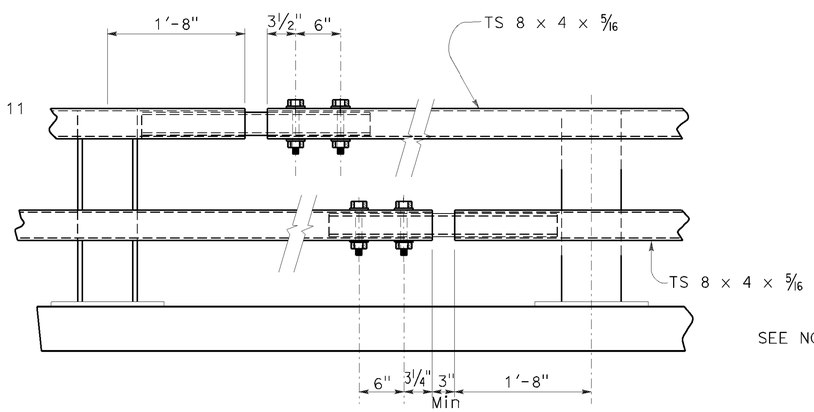

EXPANSION SPLICE

NOTE B:

Use ¾" ⌀ × 5⅝"
Hs bolts with washers, fully tensioned.
1" holes in rail Typ

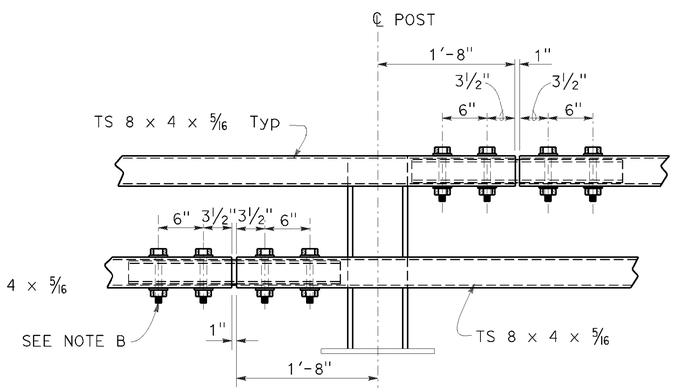

STANDARD SPLICE

STATE OF CALIFORNIA
DEPARTMENT OF TRANSPORTATION

CALIFORNIA ST-10 BRIDGE RAIL (SHEET 3 OF 3)

NO SCALE

RSP B11-70 DATED JULY 19, 2013 SUPERSEDES STANDARD PLAN B11-70 DATED MAY 20, 2011 - PAGE 310 OF THE STANDARD PLANS BOOK DATED 2010.

REVISED STANDARD PLAN RSP B11-70

2010 REVISED STANDARD PLAN RSP B11-70

26-JUL-2016
09:51

P:\PROJ\01\08430\drafting\sheets\0112000127va009.dgn

6-27-13

Dist	COUNTY	ROUTE	POST MILES TOTAL PROJECT	SHEET No.	TOTAL SHEETS
01	Hum	101	111.3/111.7	35	83

Raymond Don Tsztoo
REGISTERED CIVIL ENGINEER

October 30, 2015
PLANS APPROVAL DATE

REGISTERED PROFESSIONAL ENGINEER
Raymond Don Tsztoo
No. C37332
Exp. 6-30-16
CIVIL
STATE OF CALIFORNIA

THE STATE OF CALIFORNIA OR ITS OFFICERS OR AGENTS SHALL NOT BE RESPONSIBLE FOR THE ACCURACY OR COMPLETENESS OF SCANNED COPIES OF THIS PLAN SHEET.

TO ACCOMPANY PLANS DATED 06-20-16

ANNULAR AND HELICAL PROFILE

COUPLING TYPE	PIPE CORRUGATION	PIPE SIZE	W OR A	PIPE WALL THICKNESS		BAND THICKNESS		BAR AND STRAP (CSP ONLY)				ANGLE						
												DIMENSIONS		BOLTS (No.- Dia)		RIVETS ANGLE TO BAND		SPOT WELDS ANGLE TO BAND
				CSP	CAP	CSP	CAP	STRAP THICKNESS	BOLTS Dia	BAR Dia	BAR YIELD STRENGTH	CSP	CAP	CSP	CAP	CSP	CAP	CSP
TWO PIECE INTEGRAL FLANGE	1½′ × ¼"	6"	7"	0.064"-0.168"		0.052"								3-⅜"				
	1½′ × ¼"	8"-10"	7"	0.064"-0.168"	0.060"-0.164"	0.064"	0.060"							3-⅜"	3-⅜"			
ANNULAR	2⅔" × ½"	THROUGH 24"	12"	0.064"-0.168"	0.060"-0.164"	0.064"	0.060"					2" × 2" × 3/16"	2" × 2" × 3/16"	3-½"	3-½"	3-⅜"	3-⅜"	3-½"
HUGGER	2⅔" × ½" REROLLED END	THROUGH 24"	10½"	0.064"-0.168"		0.064"		0.079"	½"	⅞"	32 ksi							

SPIRAL RIB PROFILE

COUPLING TYPE	PIPE CORRUGATION	PIPE SIZE	W	PIPE WALL THICKNESS		BAND THICKNESS		BAR AND STRAP (SSRP ONLY)				ANGLE						
												DIMENSIONS		BOLTS (No.- Dia)		RIVETS ANGLE TO BAND		SPOT WELDS ANGLE TO BAND
				SSRP	ASRP	SSRP	ASRP	STRAP THICKNESS	BOLTS Dia	BAR Dia	BAR YIELD STRENGTH	SSRP	ASRP	SSRP	ASRP	SSRP	ASRP	SSRP
ANNULAR	2⅔" × ½" * REROLLED END	24"	12"	0.064"-0.168"	0.060"-0.164"	0.064"	0.060"					2" × 2" × 3/16"	2" × 2" × 3/16"	3-½"	3-½"	3-⅜"	3-⅜"	3-½"
HUGGER	2⅔" × ½" * REROLLED END	24"	10½"	0.064"-0.168"		0.064"		0.079"	½"	⅞"	32 ksi							

* See Note 11.

11. All profiles of Spiral Rib Pipe (¾" × ¾" ribs at 7½" pitch and ¾" × 1" ribs at 11½" pitch in both steel and aluminum and ¾" × 1" ribs at 8½" pitch in steel only) shall be manufactured with rerolled ends. Corrugation profile of the rerolled ends shall be 2⅔" × ½" annual corrugations with a minimum of two full corrugations at each end.

NOTES:

1. For helically corrugated coupling bands, the connection angles may be oriented parallel to the pipe axis, provided connecting holes are slotted lengthwise sufficiently to allow adjustment for the helix angle.
2. Tension strap may be connected to band with either spot welds or fillet welds that develop minimum required strength of strap.
3. Use 1¼" gage line dimension on attached angle leg for rivets and spot welds.
4. Band thickness shall not be less than:
   a. 3 standard thicknesses lighter than the thickness of the pipe for Corrugated Steel Pipe.
   b. 2 standard thicknesses lighter than the thickness of the pipe and in no case lighter than 0.060" for Corrugated Aluminum Pipe.
5. Dimensions, thicknesses and strengths shown are minimum.
6. For pipe arches use same width band as for round pipe of equal periphery.
7. Fillet welds of equivalent strength may be substituted for spot welds or rivets.
8. Spot welds shall develop minimum required strength of strap.
9. Pipe with rerolled ends having at least two 2⅔" × ½" annular corrugations at each end with or without an upturned flange may be connected with any of the annular coupling bands shown for pipe of the same diameter and wall thickness and having 2⅔" × ½" corrugations.
10. For downdrain applications, two piece integral flange couplers shall have factory applied sleeve type rubber gaskets with a minimum length of 7" measured along the length of the pipe.

STATE OF CALIFORNIA
DEPARTMENT OF TRANSPORTATION

CORRUGATED METAL PIPE COUPLING DETAILS No. 7 DOWNDRAIN

NO SCALE

RSP D97G DATED OCTOBER 30, 2015 SUPERSEDES STANDARD PLAN D97G DATED MAY 20, 2011 - PAGE 202 OF THE STANDARD PLANS BOOK DATED 2010.

REVISED STANDARD PLAN RSP D97G

2010 REVISED STANDARD PLAN RSP D97G

26-JUL-2016 15:50

P:\PROJ\01\0B430\drafting\sheets\0112000127va010.dgn

8-19-15

Dist	COUNTY	ROUTE	POST MILES TOTAL PROJECT	SHEET No.	TOTAL SHEETS
01	Hum	101	111.3/111.7	36	83

Theresa Gabriel
REGISTERED ELECTRICAL ENGINEER

October 30, 2015
PLANS APPROVAL DATE

REGISTERED PROFESSIONAL ENGINEER Theresa Aziz Gabriel No. E15129 Exp. 6-30-16 ELECTRICAL STATE OF CALIFORNIA

THE STATE OF CALIFORNIA OR ITS OFFICERS OR AGENTS SHALL NOT BE RESPONSIBLE FOR THE ACCURACY OR COMPLETENESS OF SCANNED COPIES OF THIS PLAN SHEET.

TO ACCOMPANY PLANS DATED 06-20-16

LEGEND:

- AB — ABANDON. IF APPLIED TO CONDUIT, REMOVE CONDUCTORS
- BC — INSTALL PULL BOX IN EXISTING CONDUIT RUN
- BP — PEDESTRIAN BARRICADE, TYPE AS INDICATED ON PLAN
- CB — INSTALL CONDUIT INTO EXISTING PULL BOX
- CC — CONNECT NEW AND EXISTING CONDUIT. REMOVE EXISTING CONDUCTORS AND INSTALL CONDUCTORS AS INDICATED
- CF — CONDUIT TO REMAIN FOR FUTURE USE. REMOVE CONDUCTORS. INSTALL PULL TAPE
- DH — DETECTOR HANDHOLE
- FA — FOUNDATION TO BE ABANDONED
- IS — INSTALL SIGN ON SIGNAL MAST ARM
- NS — NO SLIP BASE ON STANDARD
- PEC — PHOTOELECTRIC CONTROL
- PEU — PHOTOELECTRIC UNIT
- RC — EQUIPMENT OR MATERIAL TO BE REMOVED AND BECOME THE PROPERTY OF THE CONTRACTOR
- RE — REMOVE ELECTROLIER, FUSES AND BALLAST. TAPE ENDS OF CONDUCTORS
- RL — RELOCATE EQUIPMENT
- RR — REMOVE AND REUSE EQUIPMENT
- RS — REMOVE AND SALVAGE EQUIPMENT
- SC — SPLICE NEW TO EXISTING CONDUCTORS
- SD — SERVICE DISCONNECT
- TSP — TELEPHONE SERVICE POINT

ABBREVIATIONS

AC+	UNDERGROUNDED CONDUCTOR
APS	ACCESSIBLE PEDESTRIAN SIGNAL
Batt	BATTERY
BBS	BATTERY BACKUP SYSTEM
BC	BOLT CIRCLE
Blk	BLACK
BP	BYPASS
BPB	BICYCLE PUSH BUTTON
C	CONDUIT
CB	CIRCUIT BREAKER
CCTV	CLOSED CIRCUIT TELEVISION
Ckt	CIRCUIT
CMS	CHANGEABLE MESSAGE SIGN
Ctid	CALTRANS IDENTIFICATION
Comm	COMMUNICATION
Cntl	CONTROL
DF	DEPARTMENT-FURNISHED
DLC	LOOP DETECTOR LEAD-IN CABLE
EMS	EXTINGUISHABLE MESSAGE SIGN
EVUC	EMERGENCY VEHICLE UNIT CABLE
EVUD	EMERGENCY VEHICLE UNIT DETECTOR
FB	FLASHING BEACON
FBCA	FLASHING BEACON CONTROL ASSEMBLY
FBS	FLASHING BEACON WITH SLIP BASE
FO	FIBER OPTIC
G	EQUIPMENT GROUNDING CONDUCTOR
GB	GROUND BUS
GFCI	GROUND FAULT CIRCUIT INTERRUPTER
Grn	GREEN
HAR	HIGHWAY ADVISORY RADIO
Hex	HEXAGONAL
HPS	HIGH PRESSURE SODIUM
IISNS	INTERNALLY ILLUMINATED STREET NAME SIGN
ISL	INDUCTION SIGN LIGHTING
LED	LIGHT EMITTING DIODE
LMA	LUMINAIRE MAST ARM
LPS	LOW PRESSURE SODIUM
Ltg	LIGHTING
Lum	LUMINAIRE
M	METERED
MAT	MAST ARM MOUNTING TOP ATTACHMENT
MAS	MAST ARM MOUNTING SIDE ATTACHMENT
MBPS	MANUAL BYPASS SWITCH
M/M	MULTIPLE TO MULTIPLE TRANSFORMER
Mtg	MOUNTING
MV	MERCURY VAPOR LIGHTING FIXTURE
MVDS	MICROWAVE VEHICLE DETECTION SYSTEM
N	NEUTRAL (GROUNDED CONDUCTOR)
NB	NEUTRAL BUS
NC	NORMALLY CLOSE
NO	NORMALLY OPEN
P	CIRCUIT BREAKER'S POLE
PB	PULL BOX
PBA	PUSH BUTTON ASSEMBLY
PEC	PHOTOELECTRIC CONTROL
Ped	PEDESTRIAN
PEU	PHOTOELECTRIC UNIT
PT	CONDUIT WITH PULL TAPE
PTR	POWER TRANSFER RELAY
RE	RELOCATED EQUIPMENT
RM	RAMP METERING
RWIS	ROADSIDE WEATHER INFORMATION SYSTEM
SB	SLIP BASE
SIC	SIGNAL INTERCONNECT CABLE
Sig	SIGNAL
SMA	SIGNAL MAST ARM
SNS	STREET NAME SIGN
SP	SERVICE POINT
TB	TERMINAL BOARD
TDC	TELEPHONE DEMARCATION CABINET
Temp	TEMPERATURE
TMS	TRAFFIC MONITORING STATION
TOS	TRAFFIC OPERATIONS SYSTEM
UPS	UNINTERRUPTABLE POWER SUPPLY
UPSC	UNINTERRUPTABLE POWER SUPPLY CONTROLLER
Veh	VEHICLE
VIVDS	VIDEO IMAGE VEHICLE DETECTION SYSTEM
Wht	WHITE
WIM	WEIGH-IN-MOTION
Xfmr	TRANSFORMER

SOFFIT AND WALL-MOUNTED LUMINAIRES

- PENDANT SOFFIT LUMINAIRE, 70 W HPS UNLESS OTHERWISE SPECIFIED
- FLUSH-MOUNTED SOFFIT LUMINAIRE, 70 W HPS UNLESS OTHERWISE SPECIFIED
- WALL-MOUNTED LUMINAIRE, 70 W HPS UNLESS OTHERWISE SPECIFIED
- EXISTING SOFFIT OR WALL-MOUNTED LUMINAIRE TO REMAIN UNMODIFIED
- EXISTING SOFFIT OR WALL-MOUNTED LUMINAIRE TO BE MODIFIED AS SPECIFIED

NOTE:
Arrow indicates "street side" of luminaire.

COMMONLY USED SYMBOLS FOR UNITED STATES CUSTOMARY UNITS OF MEASUREMENT:

SYMBOL	DEFINITIONS
Ω	OHMS
min	MINUTE
s	SECOND
bps	BITS PER SECOND
Bps	BYTES PER SECOND
A	AMPERE
V	VOLT
V(dc)	VOLT (DIRECT CURRENT)
V(ac)	VOLT (ALTERNATING CURRENT)
FC	FOOT - CANDLE
W	WATTS
VA	VOLT-AMPERE
M	MEGA
k	KILO
m	MILLI
μ	MICRO
P	PICO
Hz	HERTZ

MISCELLANEOUS ELECTROLIERS

NEW	EXISTING	
		LUMINAIRE ON WOOD POLE
		NON-STANDARD ELECTROLIER (SEE PROJECT LEGEND)
		CITY ELECTROLIER
		ELECTROLIER FOUNDATION (FUTURE INSTALLATION)

NOTES:

1. LED luminaires shall be 235 W when installed on Type 21, 21D, 30, 31 and 32 Standards, unless otherwise specified. LED luminaires shall be 165 W when installed on other type standards or poles, unless otherwise specified.
2. Luminaires shall be the cutoff type, ANSI Type III medium cutoff lighting distribution, unless otherwise specified.

STANDARD ELECTROLIER

NEW	EXISTING	STANDARD TYPE
		15
		15D
		15 STRUCTURE
		15D STRUCTURE
		21
		21D
		21 STRUCTURE
		21D STRUCTURE
		30
		31
		32

STATE OF CALIFORNIA
DEPARTMENT OF TRANSPORTATION

ELECTRICAL SYSTEMS (LEGEND AND ABBREVIATIONS)

NO SCALE

RSP ES-1A DATED OCTOBER 30, 2015 SUPERSEDES RSP ES-1A DATED JULY 19, 2013 AND STANDARD PLAN ES-1A DATED MAY 20, 2011 - PAGE 425 OF THE STANDARD PLANS BOOK DATED 2010.

REVISED STANDARD PLAN RSP ES-1A

2010 REVISED STANDARD PLAN RSP ES-1A

26-JUL-2016
09:51

P:\PROJ\01\0B430\drafting\sheets\0112000127va011.dgn

9-29-15

Dist	COUNTY	ROUTE	POST MILES TOTAL PROJECT	SHEET No.	TOTAL SHEETS
01	Hum	101	111.3/111.7	37	83

Theresa Gabriel
REGISTERED ELECTRICAL ENGINEER

October 30, 2015
PLANS APPROVAL DATE

REGISTERED PROFESSIONAL ENGINEER Theresa Aziz Gabriel No. E15129 Exp. 6-30-16 ELECTRICAL STATE OF CALIFORNIA

THE STATE OF CALIFORNIA OR ITS OFFICERS OR AGENTS SHALL NOT BE RESPONSIBLE FOR THE ACCURACY OR COMPLETENESS OF SCANNED COPIES OF THIS PLAN SHEET.

TO ACCOMPANY PLANS DATED 06-20-16

CONDUIT

NEW	EXISTING	
		LIGHTING CONDUIT, UNLESS OTHERWISE INDICATED OR NOTED
		TRAFFIC SIGNAL CONDUIT
C	c	COMMUNICATION CONDUIT
T	t	TELEPHONE CONDUIT
F	f	FIRE ALARM CONDUIT
FO	fo	FIBER OPTIC CONDUIT
		CONDUIT TERMINATION
R	r	CONDUIT RISER ATTACHED TO THE STRUCTURE OR SERVICE POLE

SERVICE EQUIPMENT

NEW	EXISTING	
OH	oh	OVERHEAD LINES
U	U	WOOD POLE, "U" INDICATES UTILITY OWNED
		POLE GUY WITH ANCHOR
		UTILITY TRANSFORMER - GROUND MOUNTED
III	III	SERVICE EQUIPMENT ENCLOSURE TYPE. DOOR INDICATES FRONT OF ENCLOSURE
T	t	TELEPHONE DEMARCATION CABINET

POLE-MOUNTED SERVICE DESIGNATION

TYPE H SERVICE, 28'-10" — TYPE OF INSTALLATION AND POLE HEIGHT ABOVE GRADE

FLASHING BEACON

NEW	EXISTING	
R	R	FLASHING BEACON (ONE VEHICLE SIGNAL HEAD WITH BACKPLATE AND VISOR) "R" INDICATES RED INDICATION, "Y" INDICATES YELLOW INDICATION
Y Y	Y Y	FLASHING BEACON WITH TYPE 15-FBS STANDARD AND A SIGN.
R R	R R	FLASHING BEACON WITH TYPES 9, 9A OR 9B SIGN UNLESS OTHERWISE SPECIFIED OR INDICATED

SIGNAL EQUIPMENT

NEW	EXISTING	
		PEDESTRIAN SIGNAL HEAD
		PUSH BUTTON ASSEMBLY POST
		PEDESTRIAN BARRICADE
		VEHICLE SIGNAL HEAD (WITH BACKPLATE AND 3-SECTIONS: RED, YELLOW AND GREEN)
		VEHICLE SIGNAL HEAD WITH ANGLE VISOR
PV	PV	MODIFICATIONS OF BASIC SYMBOL: "L" INDICATES ALL NON-ARROW SECTIONS LOUVERED "LG" INDICATES LOUVERED GREEN SECTION ONLY "PV" INDICATES ALL 12" SECTIONS PROGRAMMED VISIBILITY "8" INDICATES ALL 8" SECTIONS (ONLY WHEN SPECIFIED)
		VEHICLE SIGNAL HEAD CONSISTING OF RED, YELLOW AND GREEN LEFT ARROW SECTIONS
		VEHICLE SIGNAL HEAD CONSISTING OF RED AND YELLOW SECTIONS WITH AN UP GREEN ARROW SECTION
		VEHICLE SIGNAL HEAD (5 SECTION) CONSISTING OF RED, YELLOW AND GREEN SECTIONS WITH YELLOW AND GREEN RIGHT ARROW SECTIONS
		TYPE 15TS STANDARD WITH VEHICLE SIGNAL HEAD AND LUMINAIRE
		TYPE 21TS STANDARD WITH VEHICLE SIGNAL HEAD AND LUMINAIRE
		STANDARD WITH LUMINAIRE AND SIGNAL MAST ARMS AND ATTACHED VEHICLE SIGNAL HEADS
		TYPE 1 STANDARD WITH ATTACHED VEHICLE SIGNAL HEADS
		STANDARD WITH A SIGNAL MAST ARM, ATTACHED VEHICLE SIGNAL HEADS AND INTERNALLY ILLUMINATED STREET NAME SIGN
		CONTROLLER ASSEMBLY. DOOR INDICATES FRONT OF CABINET

SIGNAL EQUIPMENT Cont

NEW	EXISTING	
		GUARD POST
		TYPE 1 STANDARD WITH RAMP METERING SIGN
		OPTICAL DETECTOR FOR THE EMERGENCY VEHICLE DETECTION

NOTES:

1. All signal sections shall be 12" unless shown otherwise.
2. Signal heads shall be provided with backplates unless shown otherwise.

ILLUMINATED OVERHEAD SIGN

NEW	EXISTING	
		SINGLE POST, SINGLE ILLUMINATED SIGN, BALANCED BUTTERFLY
		SINGLE POST, DOUBLE ILLUMINATED SIGN, BALANCED BUTTERFLY
		SINGLE POST, SINGLE ILLUMINATED SIGN, FULL CANTILEVER
		DOUBLE POST, SINGLE ILLUMINATED SIGN
		SINGLE ILLUMINATED SIGN MOUNTED ON STRUCTURE
		DOUBLE POST, SINGLE ILLUMINATED SIGN WITH ELECTROLIER

STATE OF CALIFORNIA
DEPARTMENT OF TRANSPORTATION

ELECTRICAL SYSTEMS (LEGEND AND ABBREVIATIONS)

NO SCALE

RSP ES-1B DATED OCTOBER 30, 2015 SUPERSEDES RSP ES-1B DATED JULY 19, 2013 AND STANDARD PLAN ES-1B DATED MAY 20, 2011 - PAGE 426 OF THE STANDARD PLANS BOOK DATED 2010.

REVISED STANDARD PLAN RSP ES-1B

2010 REVISED STANDARD PLAN RSP ES-1B

26-JUL-2016
09:52

P:\PROJ\01\0B430\drafting\sheets\0112000127va012.dgn

8-19-15

Dist	COUNTY	ROUTE	POST MILES TOTAL PROJECT	SHEET No.	TOTAL SHEETS
01	Hum	101	111.3/111.7	38	83

Theresa Gabriel
REGISTERED ELECTRICAL ENGINEER

April 15, 2016
PLANS APPROVAL DATE

REGISTERED PROFESSIONAL ENGINEER
Theresa Aziz Gabriel
No. E15129
Exp. 6-30-16
ELECTRICAL
STATE OF CALIFORNIA

THE STATE OF CALIFORNIA OR ITS OFFICERS OR AGENTS SHALL NOT BE RESPONSIBLE FOR THE ACCURACY OR COMPLETENESS OF SCANNED COPIES OF THIS PLAN SHEET.

TO ACCOMPANY PLANS DATED 06-20-16

EQUIPMENT IDENTIFICATION

ILLUMINATED SIGN IDENTIFICATION:

SIGN No. 12345
10 ISL SCI 1.0

- SIGN EQUIPMENT IDENTIFICATION CHARACTERS - PLACE ON POST OR STRUCTURE
- TRANSFORMER RATING (kVA)
- LIGHTING CONTROL TYPE
- NUMBER AND TYPE OF FIXTURES

} DO NOT PLACE ON STANDARD OR STRUCTURE

ELECTROLIER OR EQUIPMENT IDENTIFICATION:

L2745 - 15'-0"

- MAST ARM LENGTH, IF SHOWN. DO NOT PLACE ON STANDARD OR STRUCTURE
- EQUIPMENT IDENTIFICATION CHARACTERS - PLACE ON STANDARD OR STRUCTURE. EXISTING EQUIPMENT IDENTIFICATION CHARACTERS ARE SHOWN IN PARENTHESIS

CONDUIT AND CONDUCTOR IDENTIFICATION:

1½"C, 2#10, 15#14, 2 DLC, 12P#18 (PAIR)

- NUMBER AND SIZE OF CONDUCTORS AND CABLES
- SIZE OF CONDUIT IN INCHES

Ø1, Ø2, Ø2P, etc.	TRAFFIC PHASE IDENTIFICATION FOR SIGNALS, DETECTORS AND PHASE DIAGRAMS
1 2 3	LEGEND NUMBERS
A B C	EQUIPMENT, SIGNAL POLES, INSTALLATION OR ITEMS
1 2 3	CONDUIT RUN NUMBERS

SIGNAL AND LIGHTING STANDARD (TYPICAL DESIGNATION):

19A - 3 - 100

- WIND VELOCITY = 100 mph
- CASE 3 ARM LOADING
- STANDARD TYPE
- STANDARD PLAN SHEET NUMBER
- DETAIL, NUMBER, SECTION, TYPE OR ELEVATION

MISCELLANEOUS EQUIPMENT

NEW	EXISTING	
CMS	cms	CHANGEABLE MESSAGE SIGN
		CLOSED CIRCUIT TELEVISION CAMERA
		HIGHWAY ADVISORY RADIO POLE AND ANTENNA
EMS	ems	LED EXTINGUISHABLE MESSAGE SIGN
M V	m v	DETECTION DEVICE M = MICROWAVE SENSOR V = VIDEO IMAGE SENSOR

WIRING DIAGRAM LEGEND

----	EXTERNAL CONDUCTOR
———	CONDUCTOR OR BUS
	TIE POINT
	CONTACTOR COIL
	CONTACTOR, NO CONTACT
	TERMINAL BLOCKS
	CONTACTOR, NC CONTACT
	ENCLOSURE BOND
	GROUNDING ELECTRODE
	CIRCUIT BREAKER
	RECEPTACLE

PULL BOXES

NEW	EXISTING	
		PULL BOX, No. 5 UNLESS OTHERWISE INDICATED OR NOTED
3	9A(21)	PULL BOX, ADDITIONAL DESIGNATIONS OR DESCRIPTIONS

3 No. 3½ PULL BOX
5 No. 5 PULL BOX
6 No. 6 PULL BOX
7 No. 7 PULL BOX (CEILING)
8 No. 8 PULL BOX
9 No. 9 PULL BOX (STRUCTURE)
9A No. 9A PULL BOX (STRUCTURE)

(C) COMMUNICATIONS PULL BOX
(E) PULL BOX WITH EXTENSION
(S) SPRINKLER CONTROL PULL BOX
(21) ANCHOR BOLTS AND CONDUIT FOR FUTURE INSTALLATION OF TYPE 21 STANDARD
(T) TRAFFIC PULL BOX

VEHICLE DETECTORS

5 J 9 U

- VEHICLE DETECTOR DESIGNATION
- U = UPPER
  L = LOWER
- SLOT NUMBER IN INPUT FILE
- INPUT FILE (I OR J)
- PHASE

NEW	EXISTING	
		TYPE A LOOP DETECTOR. OUTLINE OF SAW CUT SHOWN
		TYPE B LOOP DETECTOR. OUTLINE OF SAW CUT SHOWN
		TYPE C LOOP DETECTOR. OUTLINE OF SAW CUT SHOWN
		TYPE D LOOP DETECTOR. OUTLINE OF SAW CUT SHOWN
		TYPE E LOOP DETECTOR. OUTLINE OF SAW CUT SHOWN
		TYPE Q LOOP DETECTOR. OUTLINE OF SAW CUT SHOWN
DH	dh	DETECTOR HANDHOLE
		MICROWAVE OR VIDEO DETECTION ZONE

STATE OF CALIFORNIA
DEPARTMENT OF TRANSPORTATION

ELECTRICAL SYSTEMS (LEGEND AND ABBREVIATIONS)

NO SCALE

RSP ES-1C DATED APRIL 15, 2016 SUPERSEDES RSP ES-1C DATED OCTOBER 30, 2015 AND RSP ES-1C DATED JULY 19, 2013 AND STANDARD PLAN ES-1C DATED MAY 20, 2011 - PAGE 427 OF THE STANDARD PLANS BOOK DATED 2010.

REVISED STANDARD PLAN RSP ES-1C

2010 REVISED STANDARD PLAN RSP ES-1C

26-JUL-2016 25:03

P:\PROJ\01\0B430\drafting\sheets\0112000127va013.dgn

1-22-16

Dist	COUNTY	ROUTE	POST MILES TOTAL PROJECT	SHEET No.	TOTAL SHEETS
01	Hum	101	111.3/111.7	39	83

Theresa Gabriel
REGISTERED ELECTRICAL ENGINEER

October 30, 2015
PLANS APPROVAL DATE

REGISTERED PROFESSIONAL ENGINEER
Theresa Aziz Gabriel
No. E15129
Exp. 6-30-16
ELECTRICAL
STATE OF CALIFORNIA

THE STATE OF CALIFORNIA OR ITS OFFICERS OR AGENTS SHALL NOT BE RESPONSIBLE FOR THE ACCURACY OR COMPLETENESS OF SCANNED COPIES OF THIS PLAN SHEET.

TO ACCOMPANY PLANS DATED 06-20-16

2010 REVISED STANDARD PLAN RSP ES-2C

NOTES:

1. The plan shows the approximate location of devices within the enclosure. Components may be rearranged, however, the "working" clearances within the service equipment enclosure shall be maintained.

2. In unpaved areas a raised portland cement concrete pad 2'-0" x 4" x width of foundation shall be constructed in front of new service equipment enclosure installation. Pad shall be set to elevation of foundation.

3. Plug-in circuit breakers may be mounted in the vertical or horizontal position. Cable-in/cable-out circuit breakers shall be mounted in the vertical position.

4. Type III-AF and Type III-BF service equipment enclosures shall have the meter viewing windows located on the front side of the service equipment enclosures.

5. Type III-AR and Type III-BR service equipment enclosure shall be similarly constructed as Type III-AF and Type III-BF respectively, except the meter viewing windows shall be located on the back side of the service equipment enclosures.

STATE OF CALIFORNIA
DEPARTMENT OF TRANSPORTATION

ELECTRICAL SYSTEMS (SERVICE EQUIPMENT ENCLOSURE NOTES TYPE III SERIES)

NO SCALE

RSP ES-2C DATED OCTOBER 30, 2015 SUPERSEDES STANDARD PLAN ES-2C DATED MAY 20, 2011 - PAGE 430 OF THE STANDARD PLANS BOOK DATED 2010.

REVISED STANDARD PLAN RSP ES-2C

26-JUL-2016 09:52

P:\PROJ\01\QB430\drafting\sheets\0112000127va014.dgn

8-19-15

Dist	COUNTY	ROUTE	POST MILES TOTAL PROJECT	SHEET No.	TOTAL SHEETS
01	Hum	101	111.3/111.7	40	83

Theresa Gabriel
REGISTERED ELECTRICAL ENGINEER

October 30, 2015
PLANS APPROVAL DATE

REGISTERED PROFESSIONAL ENGINEER Theresa Aziz Gabriel No. E15129 Exp. 6-30-16 ELECTRICAL STATE OF CALIFORNIA

THE STATE OF CALIFORNIA OR ITS OFFICERS OR AGENTS SHALL NOT BE RESPONSIBLE FOR THE ACCURACY OR COMPLETENESS OF SCANNED COPIES OF THIS PLAN SHEET.

TO ACCOMPANY PLANS DATED 06-20-16

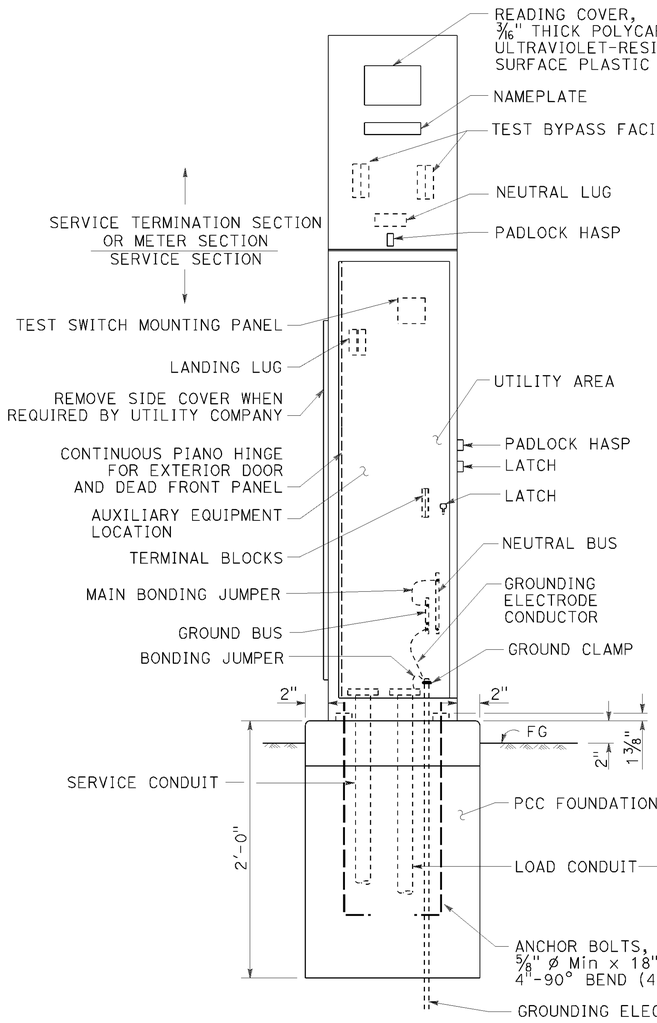

FRONT VIEW

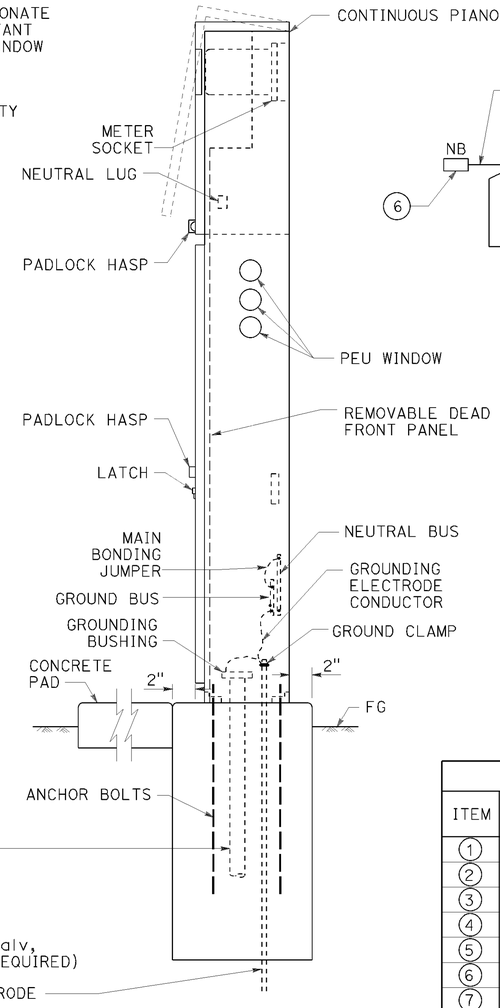

SIDE VIEW

TYPE III-AF SERVICE EQUIPMENT ENCLOSURE (TYPICAL)

DETAIL A

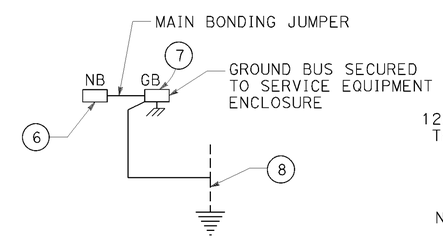

DETAIL D

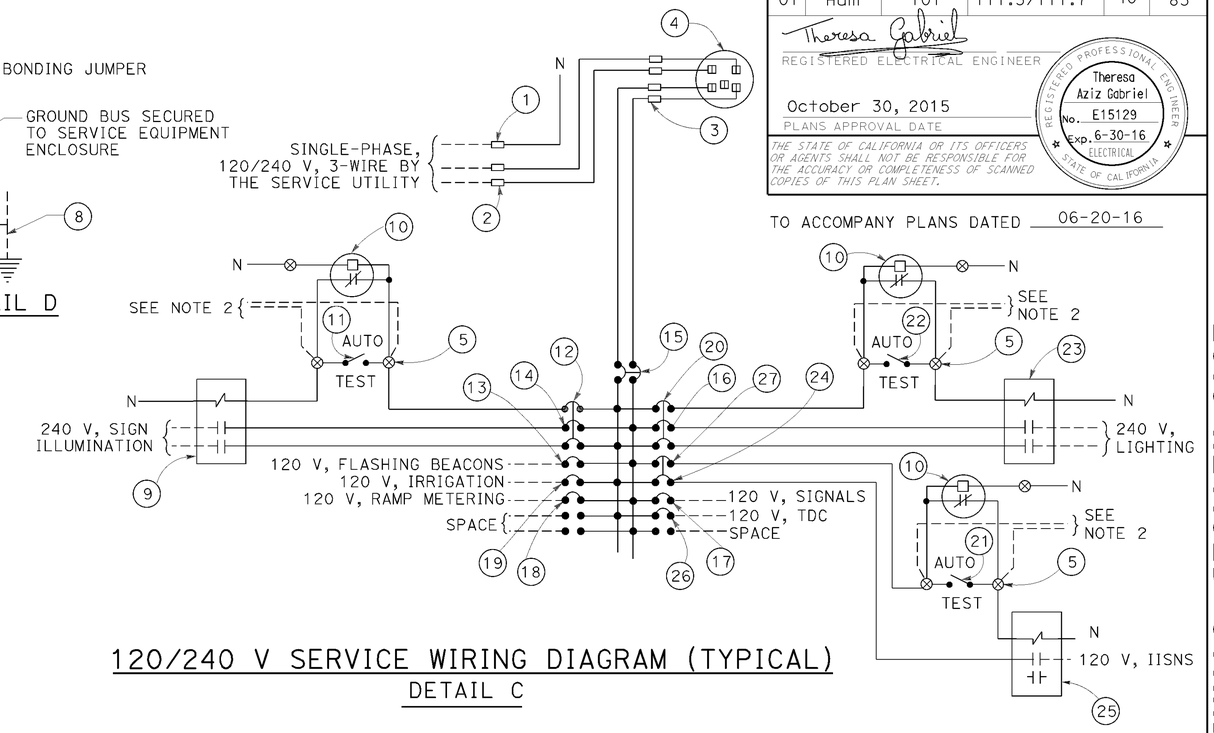

120/240 V SERVICE WIRING DIAGRAM (TYPICAL)

DETAIL C

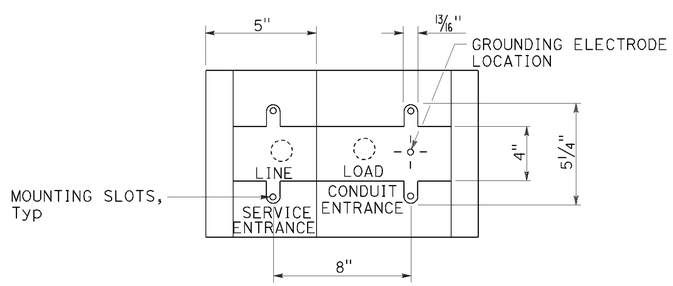

BASE FOR TYPE III-A SERVICE EQUIPMENT ENCLOSURE

DETAIL B

TYPE III-A SERVICE EQUIPMENT ENCLOSURE LEGEND (120/240 V)

ITEM	COMPONENT	NAMEPLATE DESCRIPTION	ITEM	COMPONENT	NAMEPLATE DESCRIPTION
1	NEUTRAL LUG		14	30 A, 240 V, 2P, CB	SIGN ILLUMINATION
2	LANDING LUG		15	100 A, 240 V, 2P, CB	MAIN BREAKER
3	TEST BYPASS FACILITY		16	30 A, 240 V, 2P, CB	LIGHTING
4	METER SOCKET AND SUPPORT		17	50 A, 120 V, 1P, CB	SIGNALS
5	TERMINAL BLOCKS		18	30 A, 120 V, 1P, CB	RAMP METERING
6	NEUTRAL BUS		19	20 A, 120 V, 1P, CB	IRRIGATION
7	GROUND BUS		20	15 A, 120 V, 1P, CB	LIGHTING CONTROL
8	GROUNDING ELECTRODE		21	15 A, 1P, TEST SWITCH	IISNS TEST SWITCH
9	30 A, 2P, NO CONTACTOR	SIGN ILLUMINATION	22	15 A, 1P, TEST SWITCH	LIGHTING TEST SWITCH
10	PHOTOELECTRIC UNIT (NOTE 4)	PEU	23	60 A, 2P, NO CONTACTOR	LIGHTING
11	15 A, 1P, TEST SWITCH	SIGN ILLUMINATION TEST SWITCH	24	15 A, 120 V, 1P, CB	IISNS
12	15 A, 120 V, 1P, CB	SIGN ILLUMINATION CONTROL	25	30 A, 2P, NO CONTACTOR	IISNS
13	15 A, 120 V, 1P, CB	FLASHING BEACON	26	20 A, 120 V, 1P, CB	TELEPHONE DEMARCATION CABINET
			27	15 A, 120 V, 1P, CB	IISNS CONTROL

NOTES:

1. Unless otherwise indicated on the plans, service equipment items shall be provided for each service equipment enclosure as shown.
2. Connect to remote test switch mounted on lighting standards, sign post or structure when required.
3. Items 1 and 6 shall be isolated from the service equipment enclosure.
4. Type V photoelectric control shall be used unless otherwise indicated on the plans.
5. Item 12, 20 and 27 shall be ganged operated CB.

STATE OF CALIFORNIA
DEPARTMENT OF TRANSPORTATION

ELECTRICAL SYSTEMS (SERVICE EQUIPMENT ENCLOSURE AND TYPICAL WIRING DIAGRAM, TYPE III-A SERIES)

NO SCALE

RSP ES-2D DATED OCTOBER 30, 2015 SUPERSEDES STANDARD PLAN ES-2D DATED MAY 20, 2011 - PAGE 431 OF THE STANDARD PLANS BOOK DATED 2010.

REVISED STANDARD PLAN RSP ES-2D

2010 REVISED STANDARD PLAN RSP ES-2D

26-JUL-2016
09:52

P:\PROJ\01\08430\drafting\sheets\0112000127va015.dgn

8-20-15

Dist	COUNTY	ROUTE	POST MILES TOTAL PROJECT	SHEET No.	TOTAL SHEETS
01	Hum	101	111.3/111.7	41	83

REGISTERED ELECTRICAL ENGINEER

April 15, 2016
PLANS APPROVAL DATE

REGISTERED PROFESSIONAL ENGINEER Theresa Aziz Gabriel No. E15129 Exp. 6-30-16 ELECTRICAL STATE OF CALIFORNIA

THE STATE OF CALIFORNIA OR ITS OFFICERS OR AGENTS SHALL NOT BE RESPONSIBLE FOR THE ACCURACY OR COMPLETENESS OF SCANNED COPIES OF THIS PLAN SHEET.

TO ACCOMPANY PLANS DATED 06-20-16

NOTES:

1. Controller units, plug-mounted equipment, shelf-mounted equipment and wall-mounted equipment shall be located to permit safe and easy removal or replacement without removing any other piece of equipment.
2. Cabinet fan may be installed at an alternate location near the top of the cabinet when approved by the Engineer.
3. Where telephone interconnect is required, a minimum of 5" clear vertical space shall be provided inside the cabinet for the equipment.
4. Telephone interconnect conductors shall be enclosed in a ¾"C or larger conduit through the foundation. Type 4 conduit shall be used to separate telephone and power conductors in cabinets.

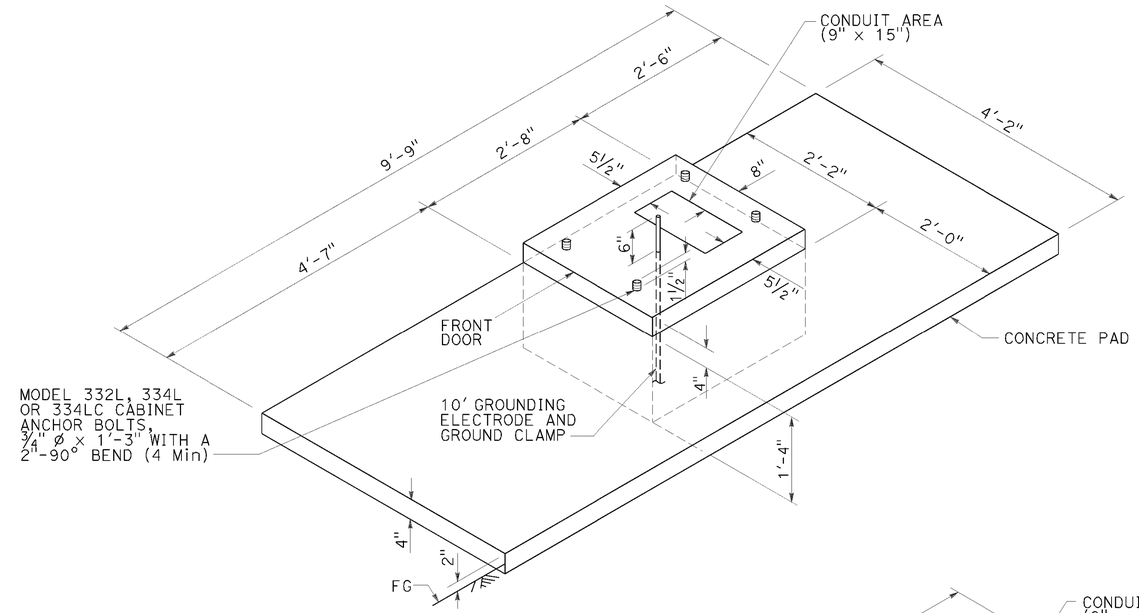

FOUNDATION AND PAD DETAIL

Model 332L, 334L and 334LC

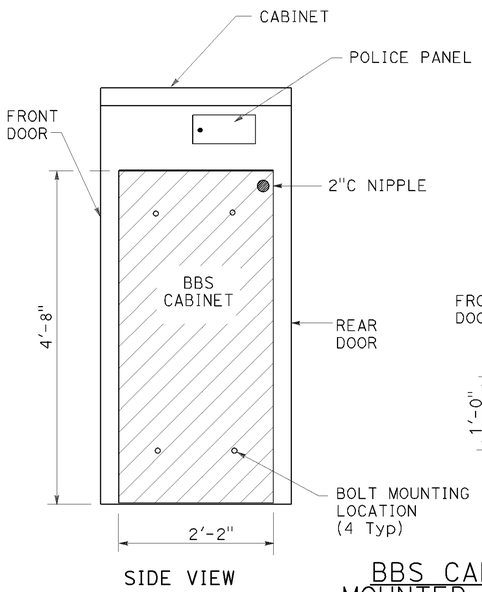

SIDE VIEW

BBS CABINET MOUNTED TO THE MODEL 332L CABINET

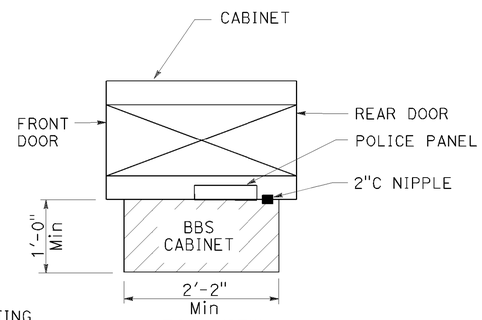

TOP VIEW

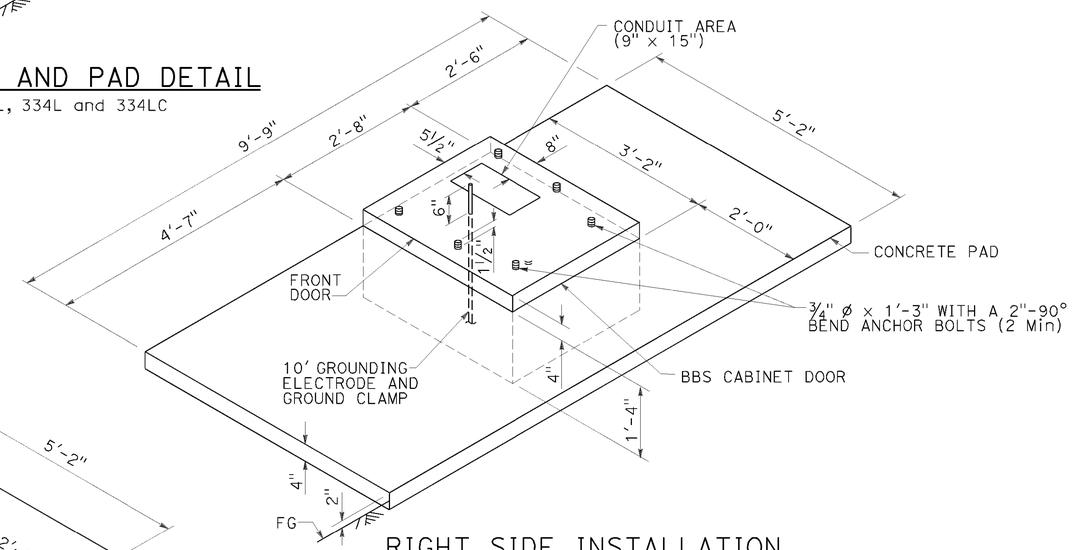

RIGHT SIDE INSTALLATION

DETAIL B

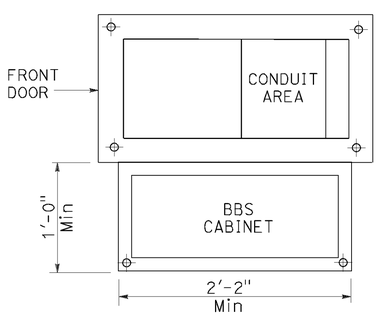

BASE PLAN FOR BBS MOUNTED TO THE MODEL 332L CABINET

(FOR DIMENSIONS AND DETAILS NOT SHOWN, SEE CABINET HOUSING DETAILS OF THE TRANSPORTATION ELECTRICAL EQUIPMENT SPECIFICATION (TEES))

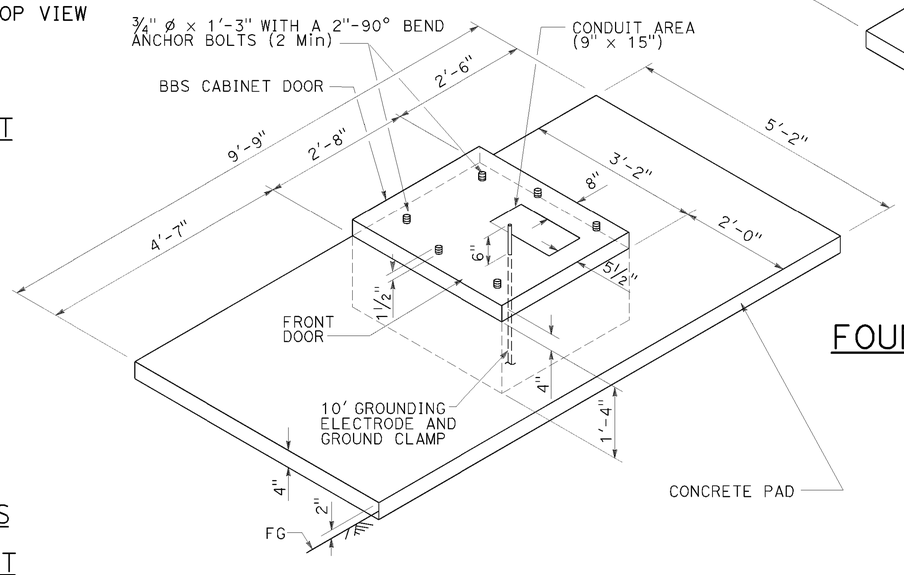

LEFT SIDE INSTALLATION

DETAIL A

MODIFIED MODEL 332L CABINET FOUNDATION DETAIL FOR BATTERY BACKUP SYSTEM

STATE OF CALIFORNIA
DEPARTMENT OF TRANSPORTATION

ELECTRICAL SYSTEMS (CONTROLLER CABINET FOUNDATION AND PAD DETAILS)

NO SCALE

RSP ES-3C DATED APRIL 15, 2016 SUPERSEDES RSP ES-3C DATED OCTOBER 30, 2015 AND STANDARD PLAN ES-3C DATED MAY 20, 2011 - PAGE 437 OF THE STANDARD PLANS BOOK DATED 2010.

REVISED STANDARD PLAN RSP ES-3C

2010 REVISED STANDARD PLAN RSP ES-3C

26-JUL-2016 09:52

P:\PROJ\01\0B430\drafting\sheets\0112000127va016.dgn

1-12-16

Dist	COUNTY	ROUTE	POST MILES TOTAL PROJECT	SHEET No.	TOTAL SHEETS
01	Hum	101	111.3/111.7	42	83

Theresa Gabriel
REGISTERED ELECTRICAL ENGINEER

October 30, 2015
PLANS APPROVAL DATE

REGISTERED PROFESSIONAL ENGINEER Theresa Aziz Gabriel No. E15129 Exp. 6-30-16 ELECTRICAL STATE OF CALIFORNIA

THE STATE OF CALIFORNIA OR ITS OFFICERS OR AGENTS SHALL NOT BE RESPONSIBLE FOR THE ACCURACY OR COMPLETENESS OF SCANNED COPIES OF THIS PLAN SHEET.

TO ACCOMPANY PLANS DATED 06-20-16

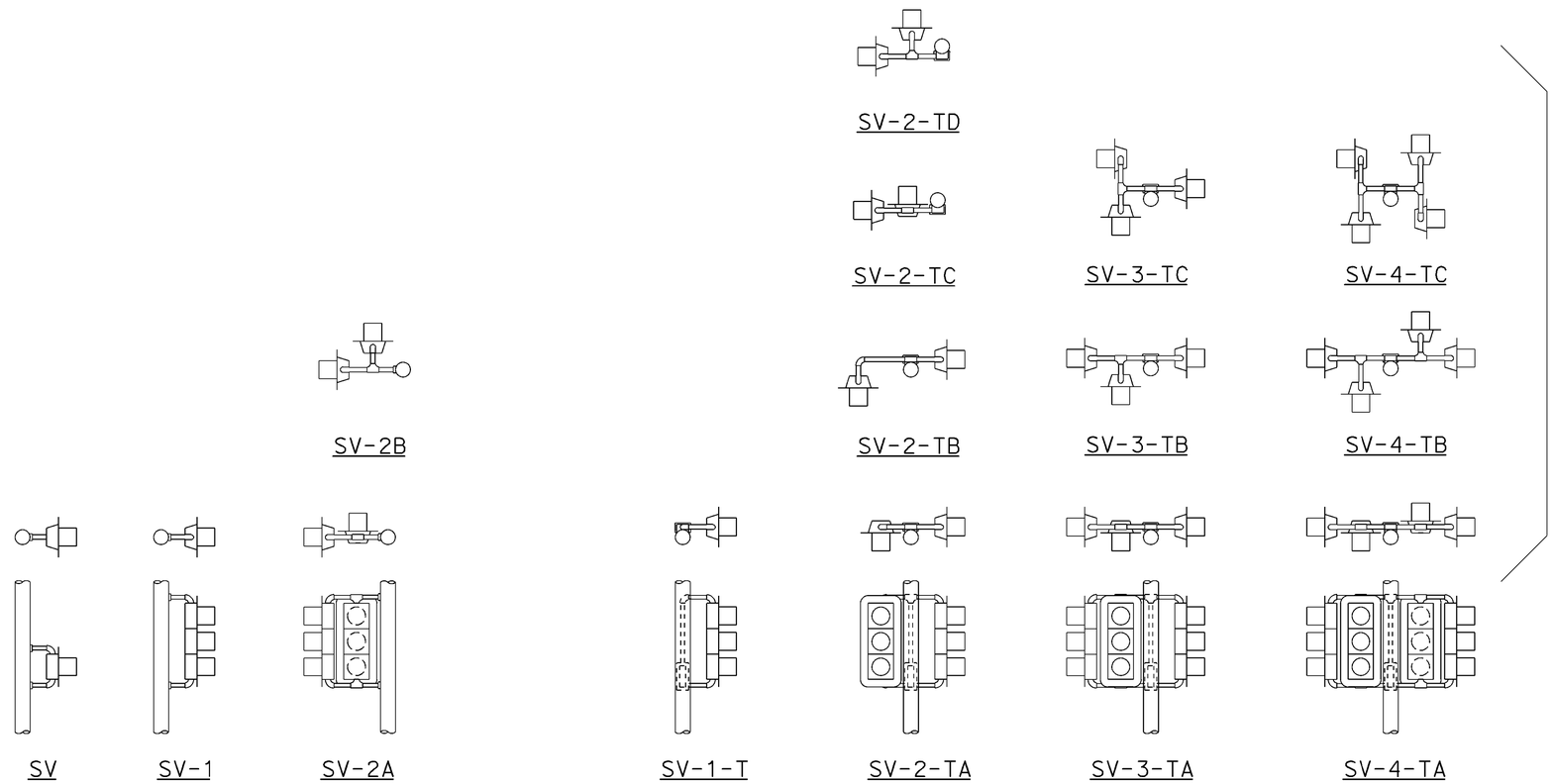

SIDE MOUNTINGS

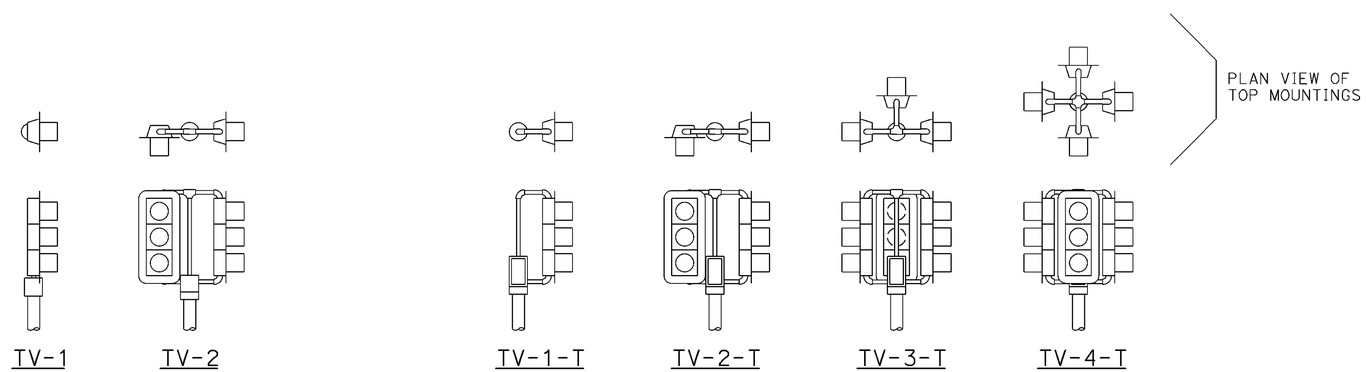

TOP MOUNTINGS

ABBREVIATIONS:

SV	SIDE MOUNTED SIGNAL HEADS
T	TERMINAL COMPARTMENT
TV	TOP MOUNTED SIGNAL HEADS
1, 2, 3, 4	NUMBER OF SIGNAL FACES (3 - SECTION, UNLESS OTHERWISE INDICATED)
A, B, C, D	CONFIGURATION OF SIGNALS

NOTES:

1. Mountings shall be oriented to provide maximum horizontal clearance to adjacent roadway.
2. Bracket arms shall be long enough to permit proper alignment of signals and backplate installation.
3. See Revised Standard Plans RSP ES-4D and RSP ES-4E for attachment fitting details.

STATE OF CALIFORNIA
DEPARTMENT OF TRANSPORTATION

ELECTRICAL SYSTEMS (SIGNAL HEADS AND MOUNTINGS)

NO SCALE

RSP ES-4A DATED OCTOBER 30, 2015 SUPERSEDES RSP ES-4A DATED JULY 19, 2013 AND STANDARD PLAN ES-4A DATED MAY 20, 2011 - PAGE 443 OF THE STANDARD PLANS BOOK DATED 2010.

REVISED STANDARD PLAN RSP ES-4A

2010 REVISED STANDARD PLAN RSP ES-4A

26-JUL-2016 09:52

P:\PROJ\01\QB430\drafting\sheets\0112000127va017.dgn

9-28-15

Dist	COUNTY	ROUTE	POST MILES TOTAL PROJECT	SHEET No.	TOTAL SHEETS
01	Hum	101	111.3/111.7	43	83

REGISTERED ELECTRICAL ENGINEER

October 30, 2015
PLANS APPROVAL DATE

REGISTERED PROFESSIONAL ENGINEER Theresa Aziz Gabriel No. E15129 Exp. 6-30-16 ELECTRICAL STATE OF CALIFORNIA

THE STATE OF CALIFORNIA OR ITS OFFICERS OR AGENTS SHALL NOT BE RESPONSIBLE FOR THE ACCURACY OR COMPLETENESS OF SCANNED COPIES OF THIS PLAN SHEET.

TO ACCOMPANY PLANS DATED 06-20-16

VISORS

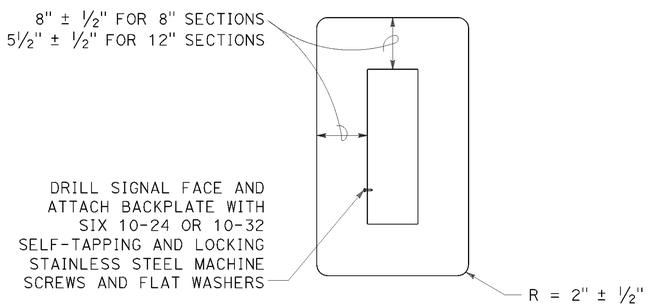

8" AND 12" SECTIONS

BACKPLATE

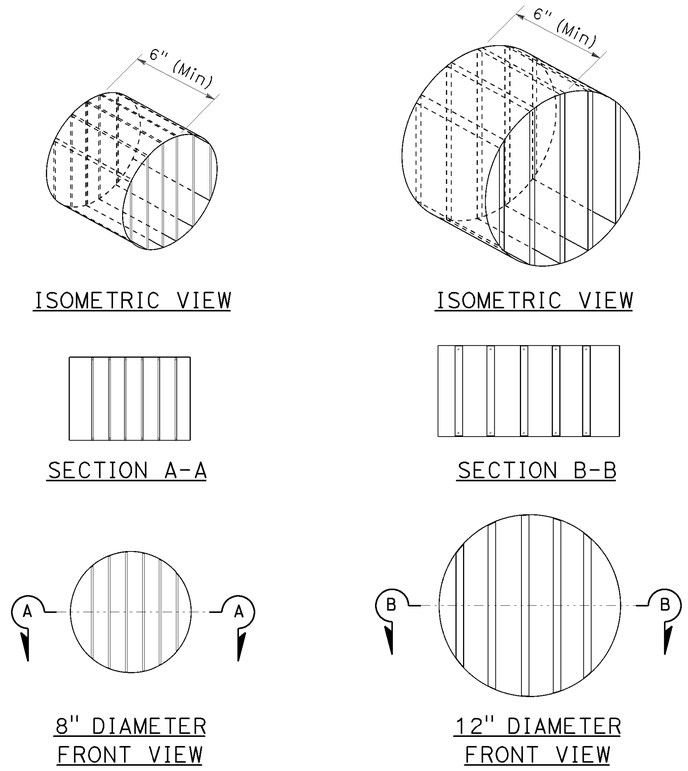

DIRECTIONAL LOUVER

Directional louvers shall be oriented and secured in place with one plated brass machine screw and nut.

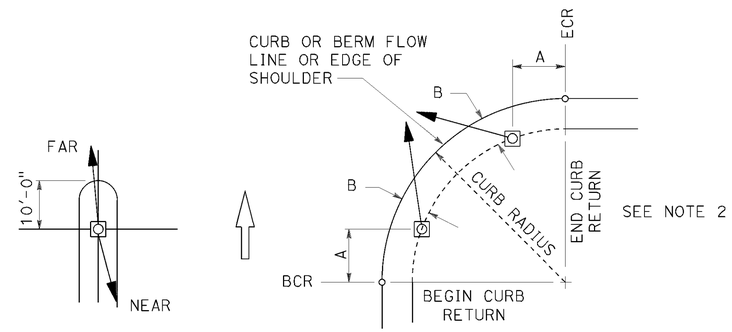

NOTES:

1. Typical signal pole placement unless dimensioned on plans.
2. For A and B dimensions, see Pole Schedule.

SIGNAL STANDARD PLACEMENT DIMENSIONS AND EQUIPMENT LOCATIONS

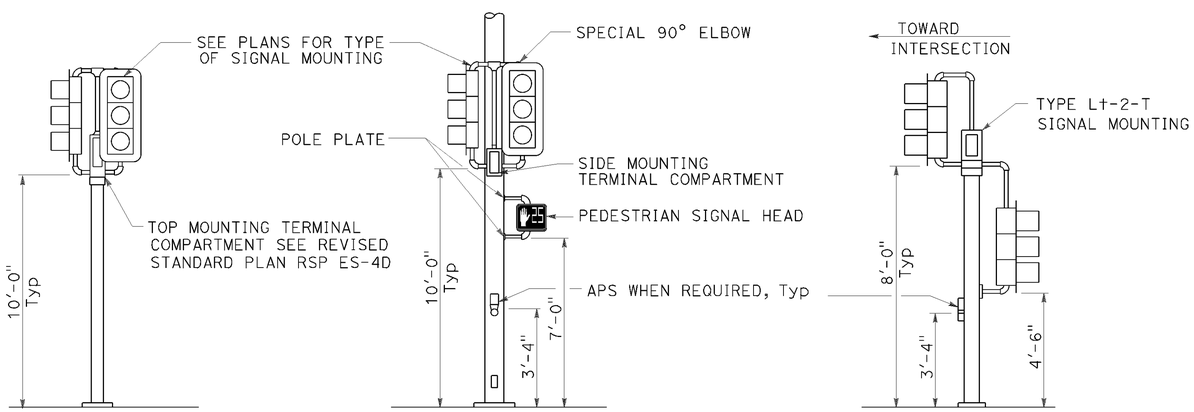

TOP MOUNTED SIGNALS (TV)
Type 1-A, 1-B, 1-C and 1-D standard as indicated on the plans

SIDE MOUNTED SIGNALS (SV AND SP)
Normally used on standards with luminaire or signal mast arm

LEFT TURN LANE SIGNAL
Type 1-A, 1-B, 1-C and 1-D standard as indicated on plans

TYPICAL SIGNAL HEAD INSTALLATIONS

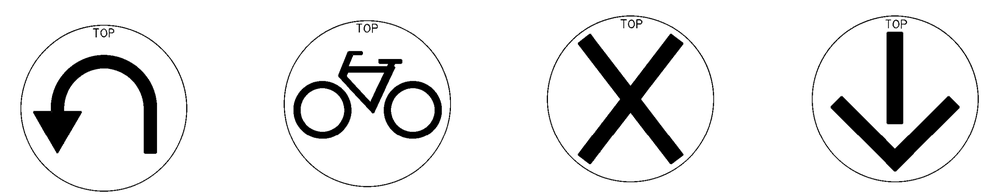

U-TURN | BICYCLE | LANE CONTROL | LANE CONTROL

SIGNAL FACES

STATE OF CALIFORNIA
DEPARTMENT OF TRANSPORTATION

ELECTRICAL SYSTEMS (SIGNAL HEADS AND MOUNTINGS)

NO SCALE

RSP ES-4C DATED OCTOBER 30, 2015 SUPERSEDES RSP ES-4C DATED JULY 19, 2013 AND STANDARD PLAN ES-4C DATED MAY 20, 2011 - PAGE 445 OF THE STANDARD PLANS BOOK DATED 2010.

REVISED STANDARD PLAN RSP ES-4C

2010 REVISED STANDARD PLAN RSP ES-4C

P:\PROJ\01\0B430\drafting\sheets\0112000127va018.dgn

26-JUL-2016 09:53

9-28-15

Dist	COUNTY	ROUTE	POST MILES TOTAL PROJECT	SHEET No.	TOTAL SHEETS
01	Hum	101	111.3/111.7	44	83

Theresa Gabriel
REGISTERED ELECTRICAL ENGINEER

October 30, 2015
PLANS APPROVAL DATE

REGISTERED PROFESSIONAL ENGINEER Theresa Aziz Gabriel No. E15129 Exp. 6-30-16 ELECTRICAL STATE OF CALIFORNIA

THE STATE OF CALIFORNIA OR ITS OFFICERS OR AGENTS SHALL NOT BE RESPONSIBLE FOR THE ACCURACY OR COMPLETENESS OF SCANNED COPIES OF THIS PLAN SHEET.

TO ACCOMPANY PLANS DATED 06-20-16

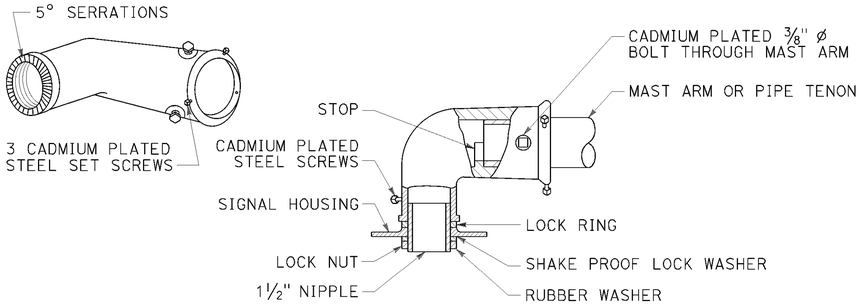

TYPE MAT
MAST ARM MOUNTING
For 2 NPS pipe, see Note 1.

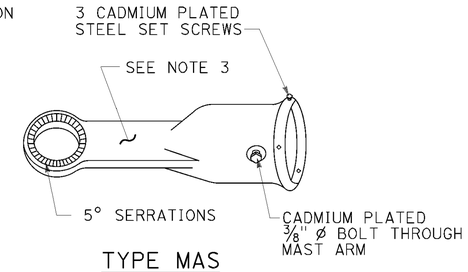

TYPE MAS
MAST ARM MOUNTING
For 2 NPS pipe, see Note 1.

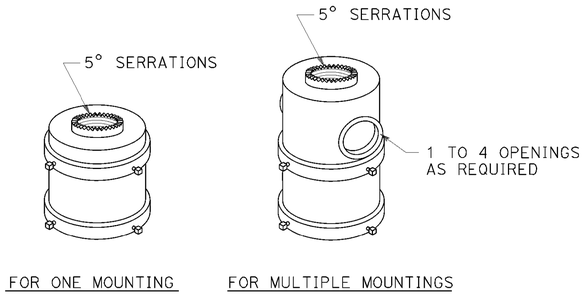

TOP MOUNTINGS
For 4 NPS pipe, see Note 2.

SIGNAL SLIP FITTERS

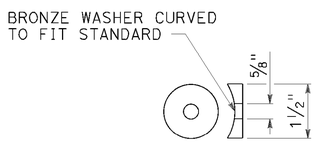

DETAIL C

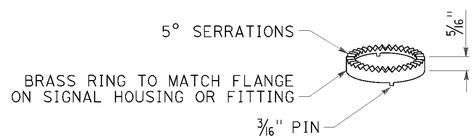

LOCK RING
Use where locking ring is not integral With signal housing or fitting.

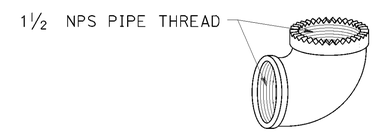

SPECIAL 90° ELBOW
One for each signal head, except those With special slip fitter mounting

MISCELLANEOUS MOUNTING HARDWARE

NOTES:

1. After mast arm signal has been plumbed and secured, drill 7/16" hole through mast arm tenon in line with slip fitter hole. Place a cadmium plated 3/8" ø galvanized bolt with washer under bolt head through hole and secure with washer, nut, and locknut. Seal openings between mast arm mountings and mast arm with mastic.
2. (A) Threaded top mounted slip fitter openings shall be 1½ NPS.
   (B) Serrations in fittings shall match those on bottom of signal heads or in lock ring.
   (C) Top opening shall be offset when backplate is used.
3. Wireway shall have a cross section area of 0.95 square inch minimum. Minimum width of ½".

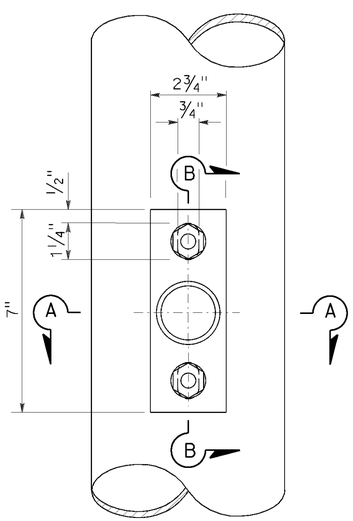

TOP VIEW

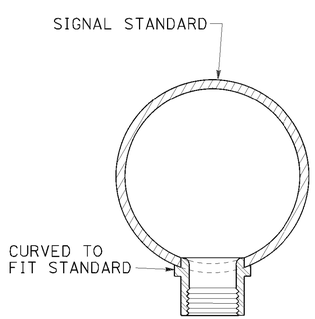

SECTION A-A

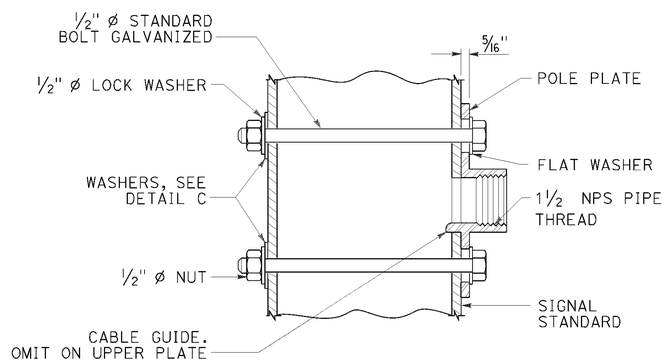

SECTION B-B

POLE PLATE FOR SIDE MOUNTED SIGNAL HEAD
WITHOUT TERMINAL COMPARTMENT

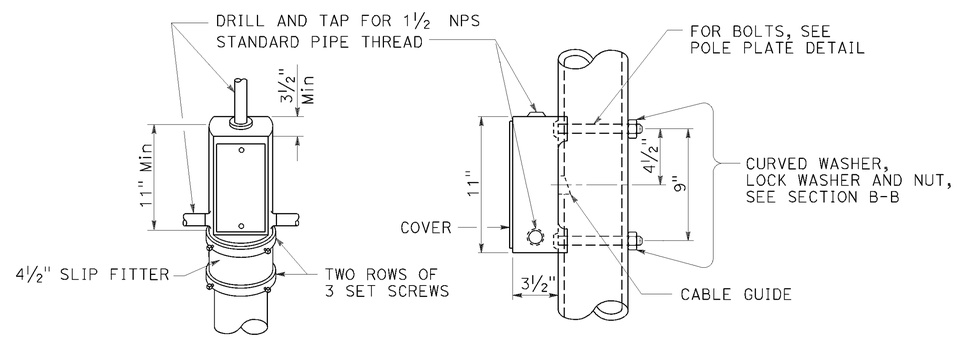

TOP MOUNTING

SIDE MOUNTING

TERMINAL COMPARTMENT

STATE OF CALIFORNIA
DEPARTMENT OF TRANSPORTATION

ELECTRICAL SYSTEMS (SIGNAL HEAD MOUNTING)

NO SCALE

RSP ES-4D DATED OCTOBER 30, 2015 SUPERSEDES STANDARD PLAN ES-4D DATED MAY 20, 2011 - PAGE 446 OF THE STANDARD PLANS BOOK DATED 2010.

REVISED STANDARD PLAN RSP ES-4D

2010 REVISED STANDARD PLAN RSP ES-4D

26-JUL-2016 09:53

P:\PROJ\01\QB430\drafting\sheets\0112000127va019.dgn

8-20-15

Dist	COUNTY	ROUTE	POST MILES TOTAL PROJECT	SHEET No.	TOTAL SHEETS
01	Hum	101	111.3/111.7	45	83

Theresa Gabriel
REGISTERED ELECTRICAL ENGINEER

October 30, 2015
PLANS APPROVAL DATE

REGISTERED PROFESSIONAL ENGINEER
Theresa Aziz Gabriel
No. E15129
Exp. 6-30-16
ELECTRICAL
STATE OF CALIFORNIA

THE STATE OF CALIFORNIA OR ITS OFFICERS OR AGENTS SHALL NOT BE RESPONSIBLE FOR THE ACCURACY OR COMPLETENESS OF SCANNED COPIES OF THIS PLAN SHEET.

TO ACCOMPANY PLANS DATED 06-20-16

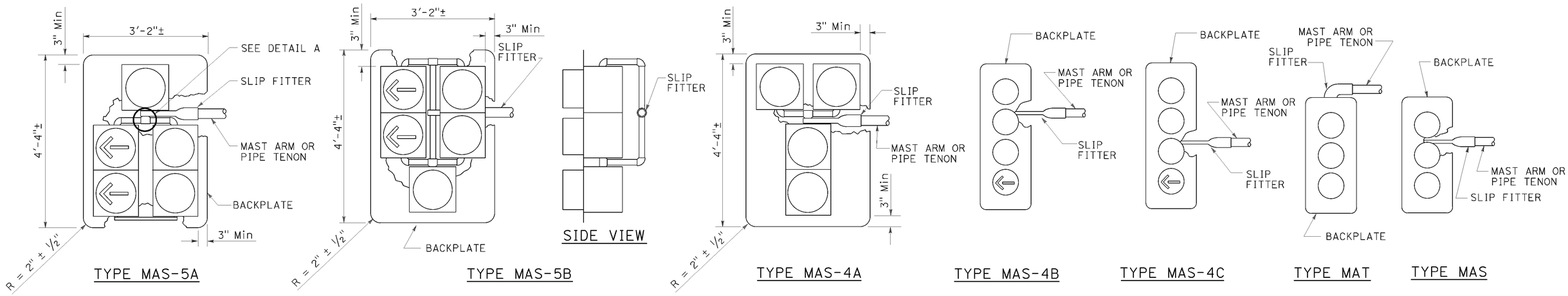

MAST ARM MOUNTINGS

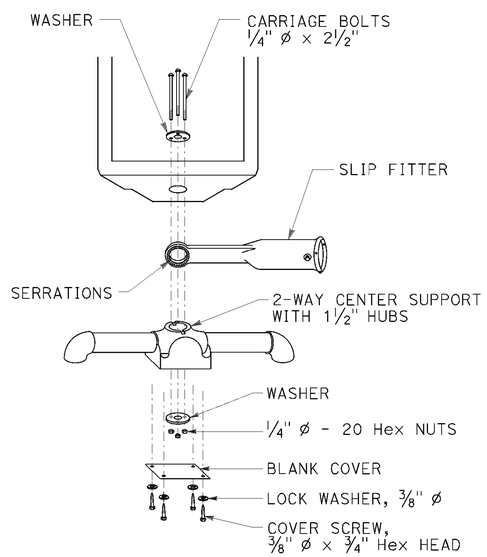

DETAIL A

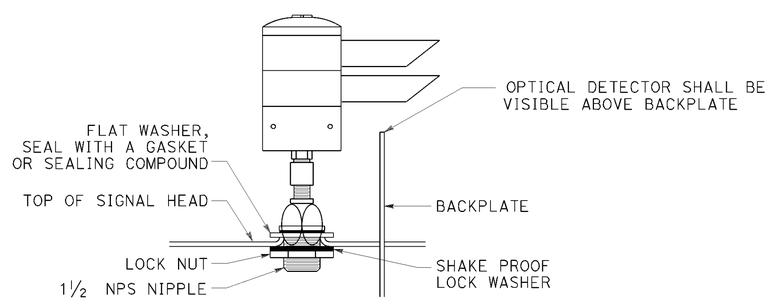

OPTICAL DETECTOR MOUNTING FOR EMERGENCY VEHICLE DETECTION

DETAIL B

STATE OF CALIFORNIA
DEPARTMENT OF TRANSPORTATION

ELECTRICAL SYSTEMS (SIGNAL HEADS AND OPTICAL DETECTOR MOUNTING)

NO SCALE

RSP ES-4E DATED OCTOBER 30, 2015 SUPERSEDES RSP ES-4E DATED JULY 19, 2013 AND STANDARD PLAN ES-4E DATED MAY 20, 2011 - PAGE 447 OF THE STANDARD PLANS BOOK DATED 2010.

REVISED STANDARD PLAN RSP ES-4E

2010 REVISED STANDARD PLAN RSP ES-4E

26-JUL-2016
09:53

P:\PROJ\01\0B430\drafting\sheets\0112000127va020.dgn

8-19-15

Dist	COUNTY	ROUTE	POST MILES TOTAL PROJECT	SHEET No.	TOTAL SHEETS
01	Hum	101	111.3/111.7	46	83

Theresa Gabriel
REGISTERED ELECTRICAL ENGINEER

April 15, 2016
PLANS APPROVAL DATE

REGISTERED PROFESSIONAL ENGINEER
Theresa Aziz Gabriel
No. E15129
Exp. 6-30-16
ELECTRICAL
STATE OF CALIFORNIA

THE STATE OF CALIFORNIA OR ITS OFFICERS OR AGENTS SHALL NOT BE RESPONSIBLE FOR THE ACCURACY OR COMPLETENESS OF SCANNED COPIES OF THIS PLAN SHEET.

TO ACCOMPANY PLANS DATED 06-20-16

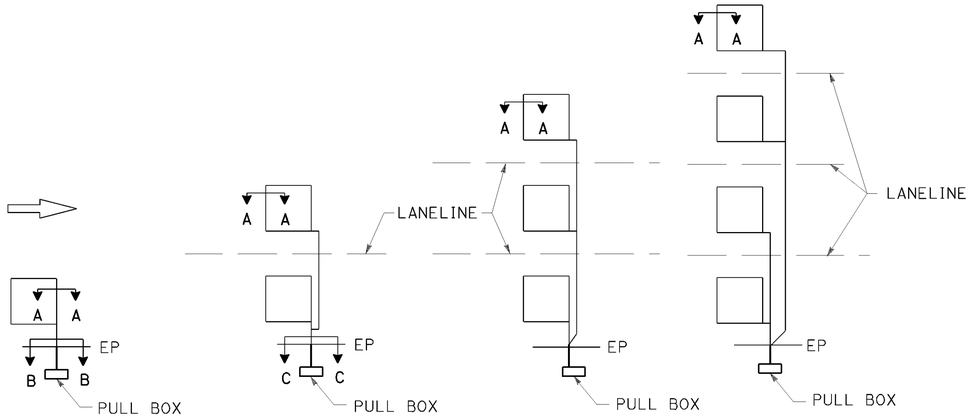

SAW CUT DETAILS

Type A loop detector configurations illustrated

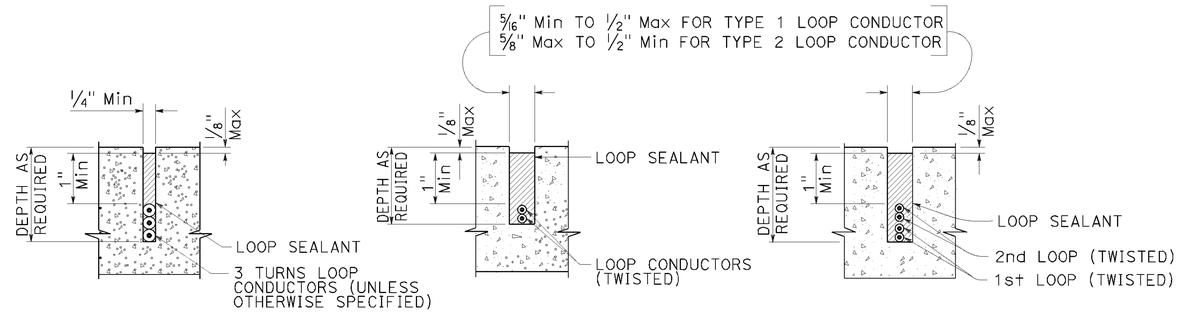

SECTION A-A SECTION B-B SECTION C-C

SLOT DETAILS - TYPE 1 AND TYPE 2 LOOP CONDUCTOR

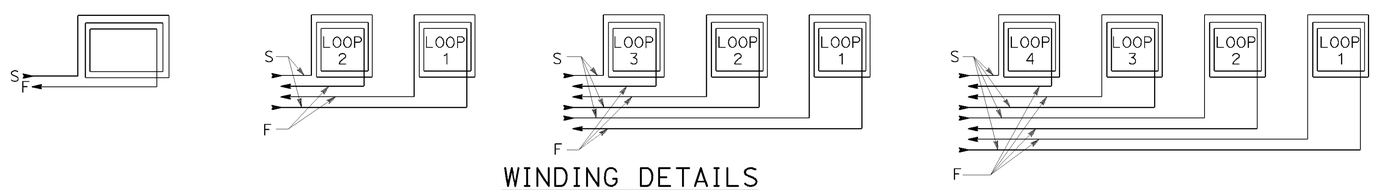

WINDING DETAILS

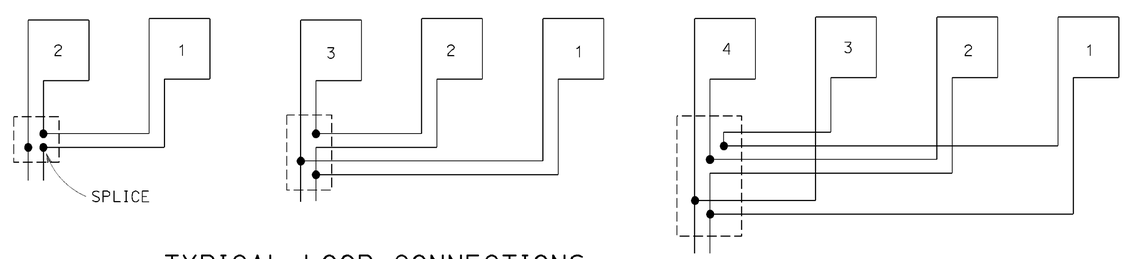

TYPICAL LOOP CONNECTIONS

Dashed lines represent the pull box

ABBREVIATIONS:

S - START
F - FINISH

STATE OF CALIFORNIA
DEPARTMENT OF TRANSPORTATION

ELECTRICAL SYSTEMS (LOOP DETECTORS)

NO SCALE

RSP ES-5A DATED APRIL 15, 2016 SUPERSEDES RSP ES-5A DATED OCTOBER 30, 2015 AND STANDARD PLAN ES-5A DATED MAY 20, 2011 - PAGE 448 OF THE STANDARD PLANS BOOK DATED 2010.

REVISED STANDARD PLAN RSP ES-5A

2010 REVISED STANDARD PLAN RSP ES-5A

26-JUL-2016 09:53

P:\PROJ\01\0B430\drafting\sheets\0112000127va021.dgn

1-12-16

Dist	COUNTY	ROUTE	POST MILES TOTAL PROJECT	SHEET No.	TOTAL SHEETS
01	Hum	101	111.3/111.7	47	83

Theresa Gabriel
REGISTERED ELECTRICAL ENGINEER

April 15, 2016
PLANS APPROVAL DATE

REGISTERED PROFESSIONAL ENGINEER
Theresa Aziz Gabriel
No. E15129
Exp. 6-30-16
ELECTRICAL
STATE OF CALIFORNIA

THE STATE OF CALIFORNIA OR ITS OFFICERS OR AGENTS SHALL NOT BE RESPONSIBLE FOR THE ACCURACY OR COMPLETENESS OF SCANNED COPIES OF THIS PLAN SHEET.

TO ACCOMPANY PLANS DATED 06-20-16

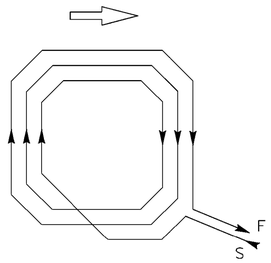

WINDING DETAIL

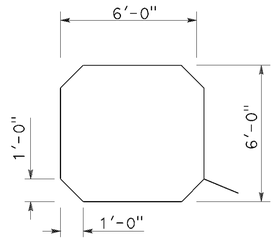

SAW CUT DETAIL

TYPE A LOOP DETECTOR CONFIGURATION

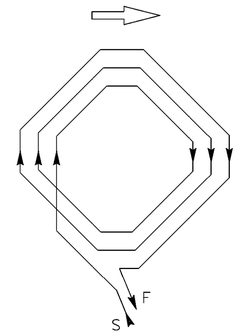

WINDING DETAIL

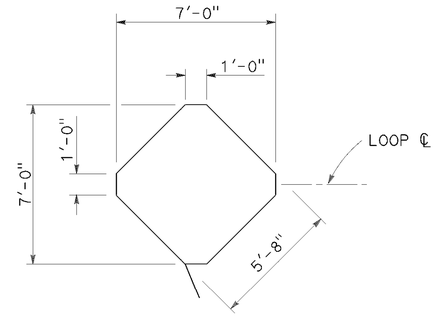

SAW CUT DETAIL

TYPE B LOOP DETECTOR CONFIGURATION

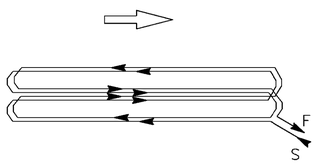

WINDING DETAIL

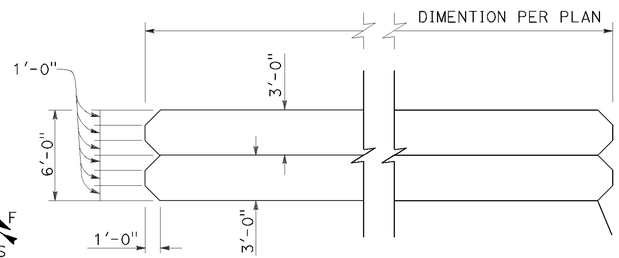

SAW CUT DETAIL

TYPE C LOOP DETECTOR CONFIGURATION

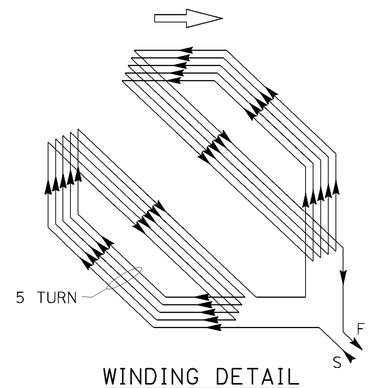

WINDING DETAIL

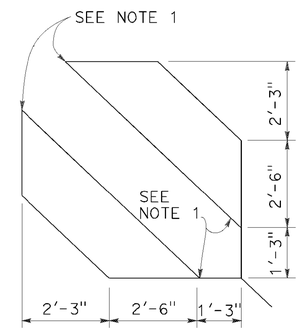

SAW CUT DETAIL

TYPE D LOOP DETECTOR CONFIGURATION

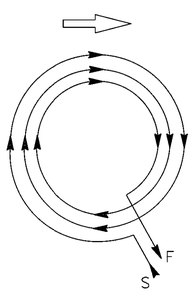

WINDING DETAIL

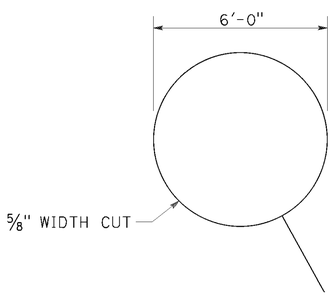

SAW CUT DETAIL

TYPE E LOOP DETECTOR CONFIGURATION

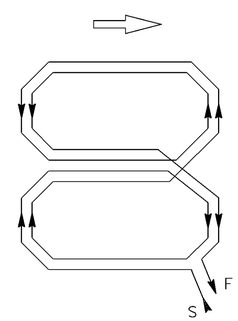

WINDING DETAIL

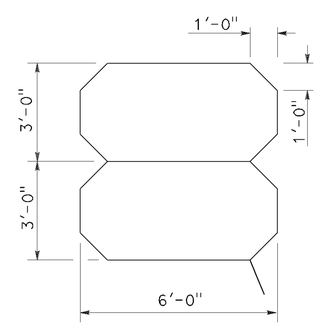

SAW CUT DETAIL

TYPE Q LOOP DETECTOR CONFIGURATION

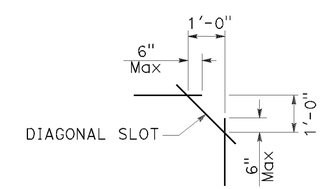

PLAN VIEW OF DIAGONAL SLOT AT CORNERS

NOTES:

1. Round corners of acute angle saw cuts to prevent damage to conductors.
2. Typical distance separating loops from edge to edge is 10' for Type A, B, D and E installation in single lane.
3. Use Type D loops for limit line detection and bicycle lanes.

STATE OF CALIFORNIA
DEPARTMENT OF TRANSPORTATION

ELECTRICAL SYSTEMS (DETECTORS)

NO SCALE

RSP ES-5B DATED APRIL 15, 2016 SUPERSEDES RSP ES-5B DATED OCTOBER 30, 2015 AND RSP ES-5B DATED JULY 19, 2013 AND STANDARD PLAN ES-5B DATED MAY 20, 2011 - PAGE 449 OF THE STANDARD PLANS BOOK DATED 2010.

REVISED STANDARD PLAN RSP ES-5B

2010 REVISED STANDARD PLAN RSP ES-5B

26-JUL-2016
09:53

P:\PROJ\01\QB430\drafting\sheets\0112000127va022.dgn

1-22-16

Dist	COUNTY	ROUTE	POST MILES TOTAL PROJECT	SHEET No.	TOTAL SHEETS
01	Hum	101	111.3/111.7	48	83

Theresa Gabriel
REGISTERED ELECTRICAL ENGINEER

October 30, 2015
PLANS APPROVAL DATE

REGISTERED PROFESSIONAL ENGINEER Theresa Aziz Gabriel No. E15129 Exp. 6-30-16 ELECTRICAL STATE OF CALIFORNIA

THE STATE OF CALIFORNIA OR ITS OFFICERS OR AGENTS SHALL NOT BE RESPONSIBLE FOR THE ACCURACY OR COMPLETENESS OF SCANNED COPIES OF THIS PLAN SHEET.

TO ACCOMPANY PLANS DATED 06-20-16

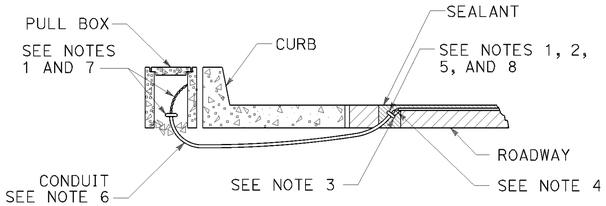

TYPE A
CURB TERMINATION DETAIL

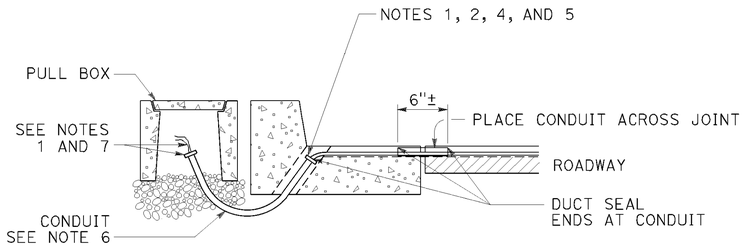

CROSS SECTION

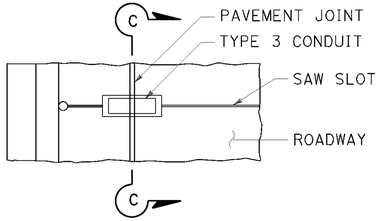

PLAN VIEW

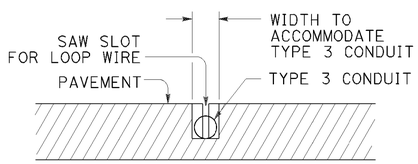

SECTION C-C

TYPE B
CURB TERMINATION DETAIL

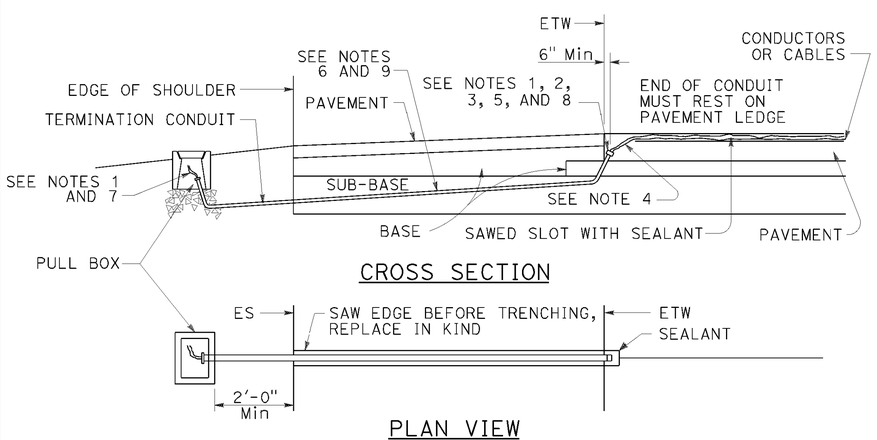

CROSS SECTION

PLAN VIEW
SHOULDER TERMINATION DETAILS

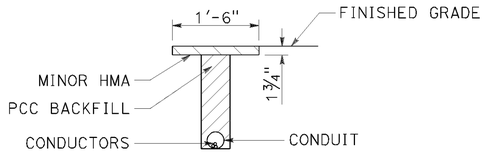

"T" TRENCH
DETAIL T

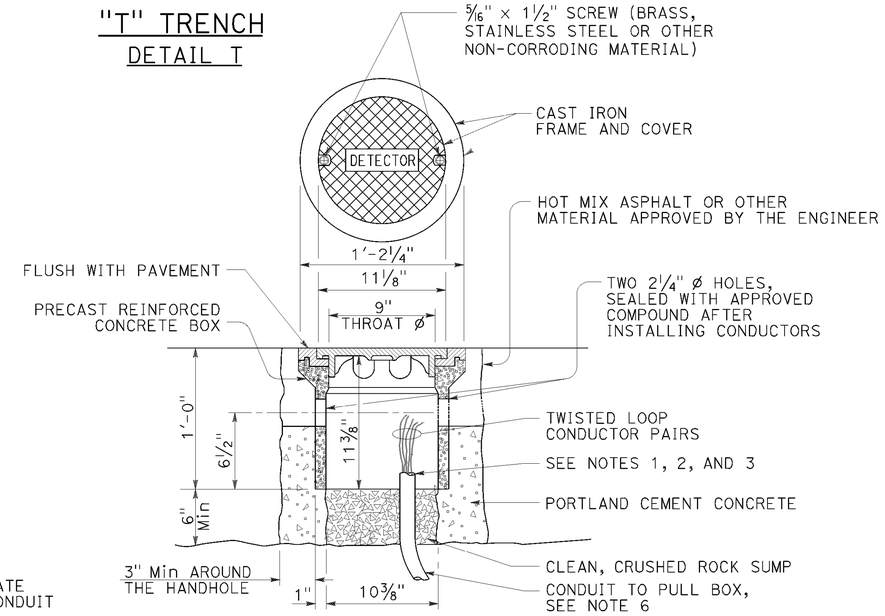

DETECTOR HANDHOLE DETAIL

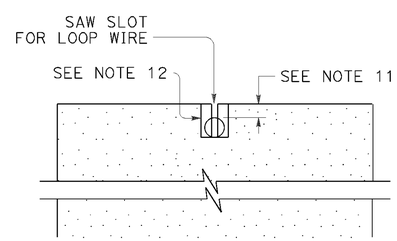

SECTION A-A

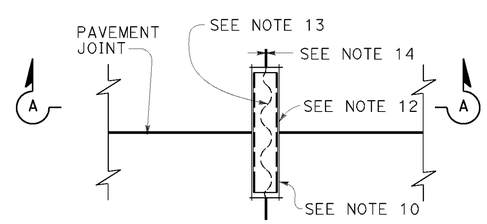

PLAN VIEW
TYPICAL LOOP LEAD-IN DETAIL AT PAVEMENT JOINT

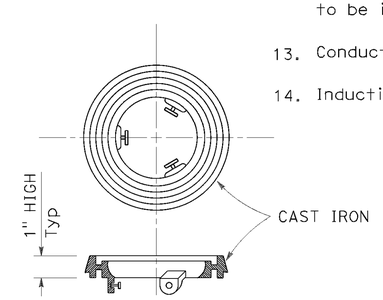

LOCKING GRADE RING

NOTES:

1. Bushing shall be used at end of conduit.
2. Tape detector conductors or cables 3" each side of bushings.
3. Install duct seal compound to each end of termination conduit before installing sealant.
4. Round all sharp edges where detector conductors or cables have to pass.
5. End of conduit shall be 3⅛" below roadway surface.
6.

Conduit size	Loop conductors
1"C minimum	1 to 2 pairs
1½"C minimum	3 to 4 pairs
2"C minimum	5 or more pairs

7. Splice detector conductors or cables to detector lead-in-cable.
8. Location of detector handhole when shown on plans.
9. When the shoulder and traveled way are paved with the same material and there is no joint between them, the conduit shall extend only 2'-0" into the shoulder pavement.
10. ¾"C, Type 3 conduit 6" long minimum, plug both ends with duct compound to keep out sealant.
11. ½" Minimum between top of conduit and pavement surface.
12. Sawcut shall not exceed 1" in width and ⅛" longer than conduit to be installed.
13. Conductors with ½" minimum slack inside conduit.
14. Inductive loop detector saw slot.

STATE OF CALIFORNIA
DEPARTMENT OF TRANSPORTATION

ELECTRICAL SYSTEMS (CURB AND SHOULDER TERMINATION, TRENCH, AND HANDHOLE DETAILS)

NO SCALE

RSP ES-5D DATED OCTOBER 30, 2015 SUPERSEDES RSP ES-5D DATED JULY 19, 2013 AND STANDARD PLAN ES-5D DATED MAY 20, 2011 - PAGE 451 OF THE STANDARD PLANS BOOK DATED 2010.

REVISED STANDARD PLAN RSP ES-5D

2010 REVISED STANDARD PLAN RSP ES-5D

26-JUL-2016 09:54

P:\PROJ\01\08430\drafting\sheets\0112000127va023.dgn

8-19-15

Dist	COUNTY	ROUTE	POST MILES TOTAL PROJECT	SHEET No.	TOTAL SHEETS
01	Hum	101	111.3/111.7	49	83

REGISTERED CIVIL ENGINEER

July 15, 2016
PLANS APPROVAL DATE

REGISTERED PROFESSIONAL ENGINEER
Stanley P. Johnson
No. C57793
Exp. 3-31-18
CIVIL
STATE OF CALIFORNIA

THE STATE OF CALIFORNIA OR ITS OFFICERS OR AGENTS SHALL NOT BE RESPONSIBLE FOR THE ACCURACY OR COMPLETENESS OF SCANNED COPIES OF THIS PLAN SHEET.

TO ACCOMPANY PLANS DATED 06-20-16

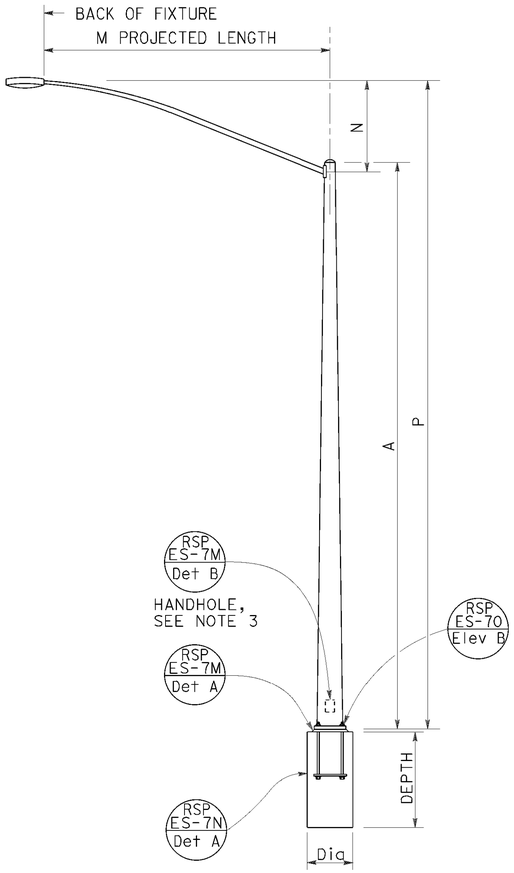

TYPE 15 AND TYPE 21
ELEVATION A

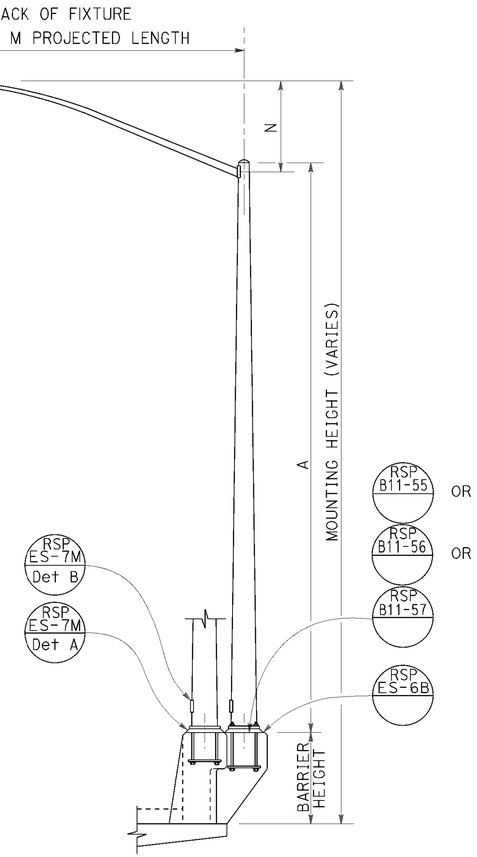

TYPE 15 AND TYPE 21 BARRIER RAIL MOUNTED
ELEVATION B

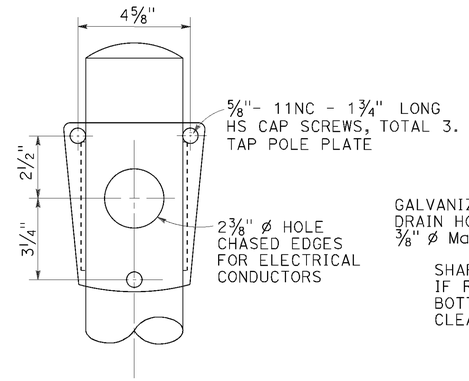

FRONT VIEW

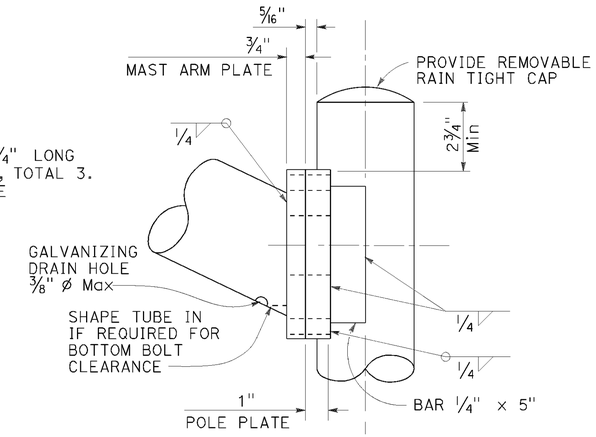

SIDE VIEW

LUMINAIRE MAST ARM CONNECTION
DETAIL R

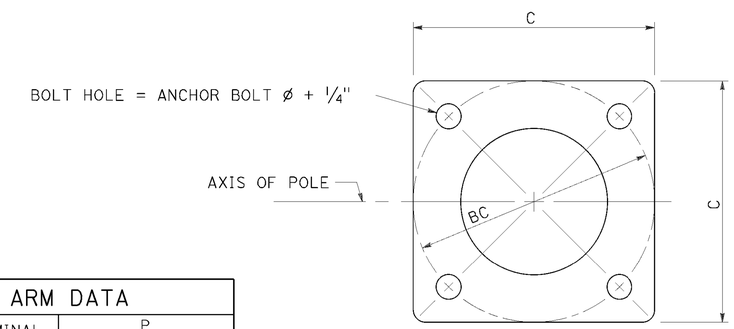

BASE PLATE
DETAIL A

POLE TYPE	POLE DATA				BASE PLATE DATA				CIDH PILE FOUNDATION	
	A HEIGHT	Min OD BASE	Min OD TOP	WALL THICKNESS	C	BC = BOLT CIRCLE	THICKNESS	ANCHOR BOLT SIZE	Dia	DEPTH
15	30'-0"	8"	3 11/16"	0.1196"	1'-0"	1'-0"	1 1/2"	1" ø x 36" *	2'-6"	6'-0"
21	35'-0"	8 5/8"	3 9/16"	0.1793"			2"	1 1/4" ø x 36" *		7'-0"

* FOR BARRIER RAIL BOLTS, SEE REVISED STANDARD PLAN RSP ES-6B.

LUMINAIRE MAST ARM DATA					
M PROJECTED LENGTH	N RISE	Min OD AT POLE	NOMINAL THICKNESS	P TYPE 15	P TYPE 21
6'-0"	2'-0"±	3 1/4"	0.1196"	31'-6"±	36'-6"±
8'-0"	2'-6"±	3 1/2"		32'-0"±	37'-0"±
10'-0"	3'-3"±	3 7/8"		32'-9"±	37'-9"±
12'-0"	4'-3"±			33'-9"±	38'-9"±
15'-0"	4'-9"±	4 1/4"		34'-3"±	39'-3"±

NOTES:

1. [ ] Indicates mast arm length to be used unless otherwise noted on the plans.
2. For Type 15-SB, use Type 15 standard with Type 30 slip base plate details, see Revised Standard Plan RSP ES-6F.
3. Handhole shall be located on the downstream side of traffic.
4. For additional notes and details, see Revised Standard Plans RSP ES-7M and RSP ES-7N.

STATE OF CALIFORNIA
DEPARTMENT OF TRANSPORTATION

ELECTRICAL SYSTEMS (LIGHTING STANDARD, TYPES 15 AND 21)

NO SCALE

RSP ES-6A DATED JULY 15, 2016 SUPERSEDES RSP ES-6A DATED OCTOBER 30, 2015 AND STANDARD PLAN ES-6A DATED MAY 20, 2011 - PAGE 452 OF THE STANDARD PLANS BOOK DATED 2010.

REVISED STANDARD PLAN RSP ES-6A

2010 REVISED STANDARD PLAN RSP ES-6A

26-JUL-2016
09:54

P:\PROJ\01\QB430\drafting\sheets\0112000127va024.dgn

6-20-16

Dist	COUNTY	ROUTE	POST MILES TOTAL PROJECT	SHEET No.	TOTAL SHEETS
01	Hum	101	111.3/111.7	50	83

REGISTERED CIVIL ENGINEER

July 15, 2016

PLANS APPROVAL DATE

REGISTERED PROFESSIONAL ENGINEER Stanley P. Johnson No. C57793 Exp. 3-31-18 CIVIL STATE OF CALIFORNIA

THE STATE OF CALIFORNIA OR ITS OFFICERS OR AGENTS SHALL NOT BE RESPONSIBLE FOR THE ACCURACY OR COMPLETENESS OF SCANNED COPIES OF THIS PLAN SHEET.

TO ACCOMPANY PLANS DATED 06-20-16

NOTES:

1. [ ] Indicates mast arm length to be used unless otherwise noted on the plans.
2. For additional notes and details, see Rvised Standard Plans RSP ES-7M and RSP ES-7N.
3. See Concrete Barrier Details Type 60E and 60SE.
4. For locations with one arm, plug unused cap screw holes and chased outlet with galvanized cap screws and knockout plug.
5. Handhole shall be located perpendicular to the luminaire mast arm and as directed by the Engineer.

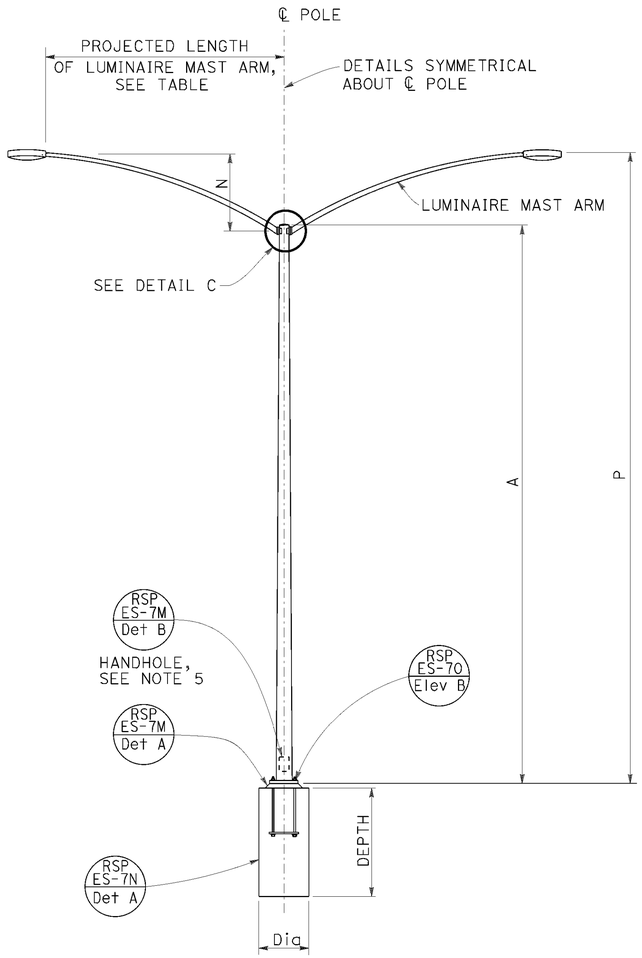

TYPE 15D AND TYPE 21D

ELEVATION A

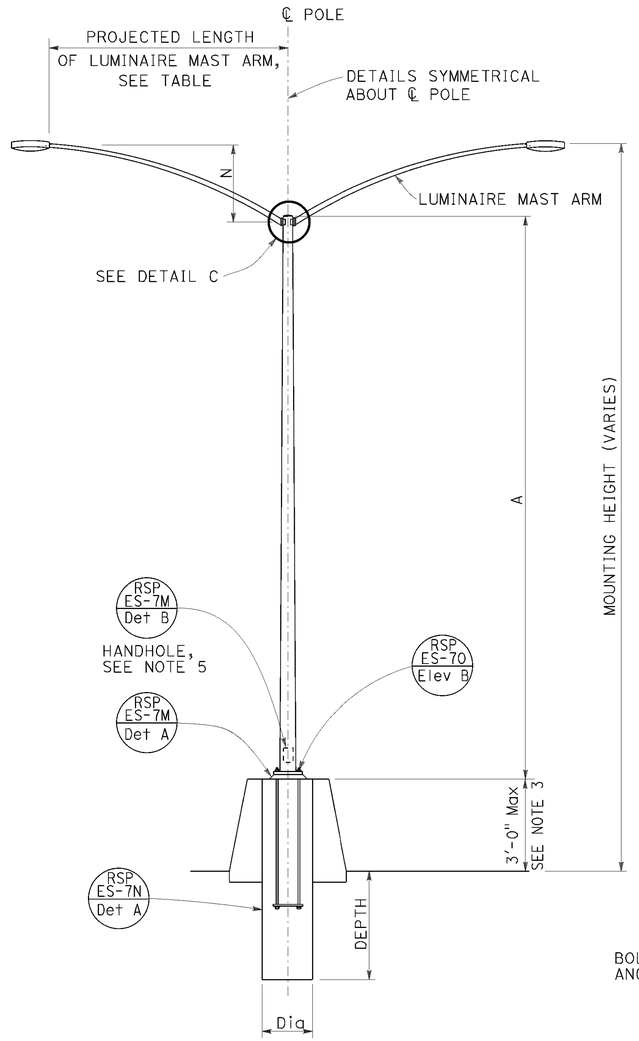

TYPE 15D AND TYPE 21D

MEDIAN BARRIER MOUNTED

ELEVATION B

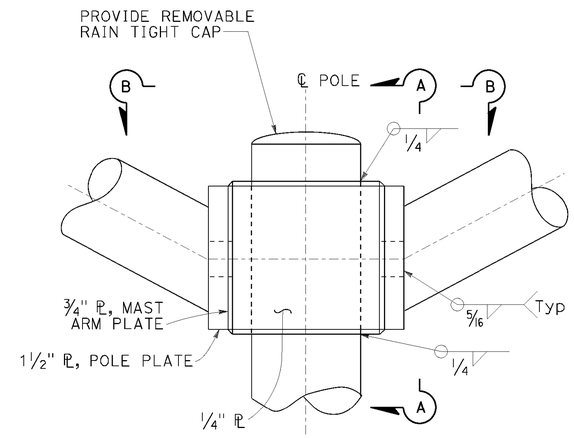

DETAIL C

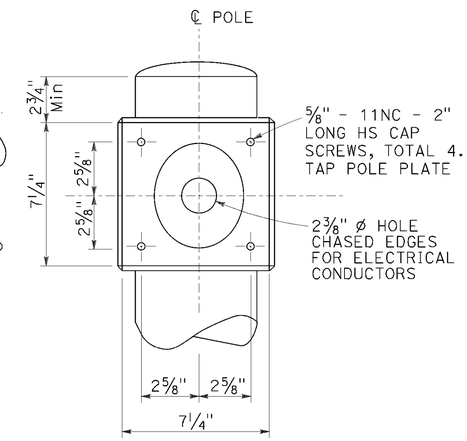

SECTION A-A

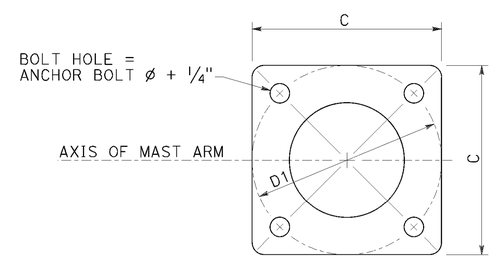

BASE PLATE

DETAIL B

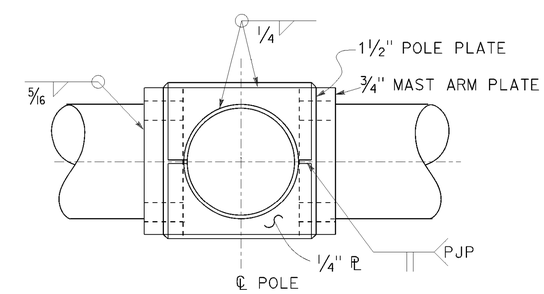

SECTION B-B

POLE TYPE	POLE DATA				BASE PLATE DATA				CIDH PILE FOUNDATION	
	A HEIGHT	Min OD BASE	Min OD TOP	Min THICKNESS	C	BC = BOLT CIRCLE	THICKNESS	ANCHOR BOLT SIZE	Dia	DEPTH
15D	30'-0"	8"	3 11/16"	0.1793"	1'-0"	1'-0"	1 1/2"	1 1/4" ø x 42"	2'-6"	7'-0"
21D	35'-0"	8 5/8"								

LUMINAIRE MAST ARM DATA					
PROJECTED LENGTH	N RISE	Min OD AT POLE	NOMINAL THICKNESS	P TYPE 15D	P TYPE 21D
6'-0"	2'-0"±	3 1/4"	0.1196"	31'-6"±	36'-6"±
8'-0"	2'-6"±	3 1/2"		32'-0"±	37'-0"±
10'-0"	3'-3"±	3 7/8"		32'-9"±	37'-9"±
12'-0"	4'-3"±			33'-9"±	38'-9"±

STATE OF CALIFORNIA
DEPARTMENT OF TRANSPORTATION

ELECTRICAL SYSTEMS (LIGHTING STANDARD, TYPES 15D AND 21D, DOUBLE LUMINAIRE MAST ARM)

NO SCALE

RSP ES-6D DATED JULY 15, 2016 SUPERSEDES RSP ES-6D DATED OCTOBER 30, 2015 AND STANDARD PLAN ES-6D DATED MAY 20, 2011 - PAGE 455 OF THE STANDARD PLANS BOOK DATED 2010.

REVISED STANDARD PLAN RSP ES-6D

2015 REVISED STANDARD PLAN RSP ES-6D

26-JUL-2016 09:54

P:\PROJ\01\0B430\drafting\sheets\0112000127va025.dgn

6-20-16

DIST	COUNTY	ROUTE	POST MILES TOTAL PROJECT	SHEET NO.	TOTAL SHEETS
01	Hum	101	111.3/111.7	51	83

Theresa Gabriel
REGISTERED ELECTRICAL ENGINEER

April 15, 2016
PLANS APPROVAL DATE

REGISTERED PROFESSIONAL ENGINEER Theresa Aziz Gabriel No. E15129 Exp. 6-30-16 ELECTRICAL STATE OF CALIFORNIA

THE STATE OF CALIFORNIA OR ITS OFFICERS OR AGENTS SHALL NOT BE RESPONSIBLE FOR THE ACCURACY OR COMPLETENESS OF SCANNED COPIES OF THIS PLAN SHEET.

TO ACCOMPANY PLANS DATED 06-20-16

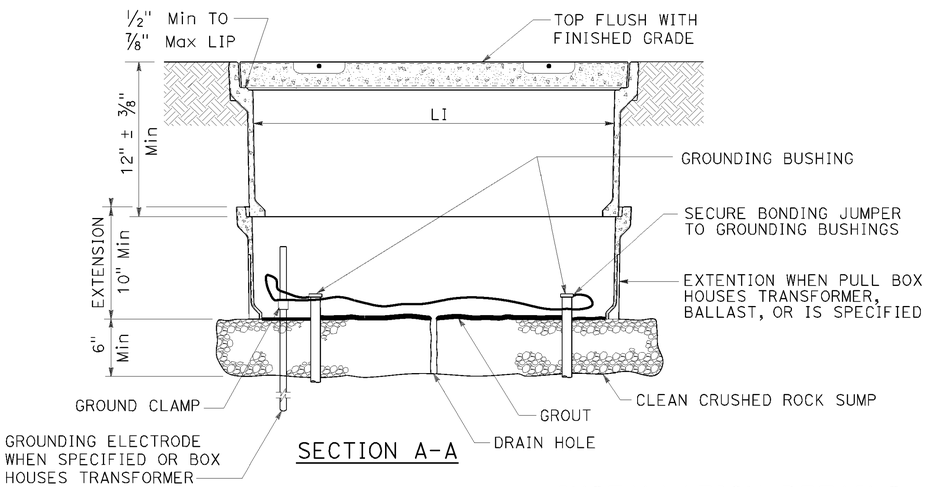

SECTION A-A

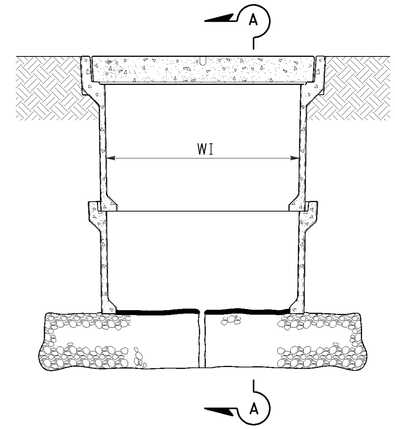

SIDE VIEW

INSTALLATION DETAILS

DETAIL A

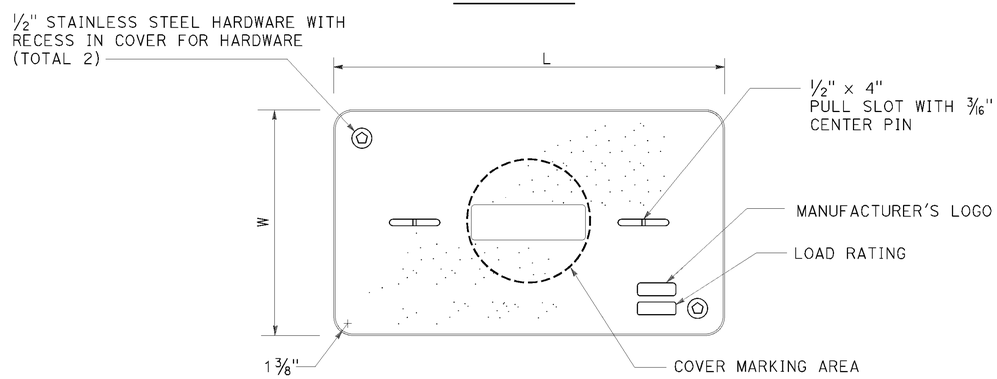

COVER TOP VIEW

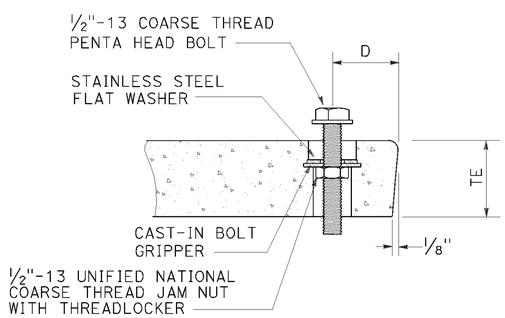

TYPICAL COVER CAPTIVE BOLT

OR SIMILAR

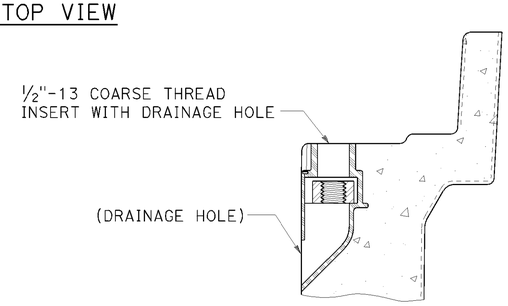

TYPICAL THREADED INSERT

OR SIMILAR

NOTES:

1. The nominal dimensions of the opening in which the cover sets shall be the same as the cover dimensions except the length and width dimensions shall be 1/8" greater.
2. Covers and boxes shall be interchangeable with California standard male and female gages. When interchanged with a standard male or female gage, the top surfaces shall be flush within 1/8". Top outside radius of covers and pull boxes shall have a 1/8" radius.
3. Dimensions for the cover for non-traffic pull box are nominal values.

DIMENSION TABLE

PULL BOX	PULL BOX					COVER				
	MINIMUM DEPTH BOX	MINIMUM DEPTH EXTENSION	MINIMUM WEIGHT	LI Min	WI Min	TE	D	L	W	MINIMUM WEIGHT
No. 3 1/2	12"	N/A	40 lb	1' - 3"	9"	1 3/4"	1 3/4"	1'-3 1/4" - 1'-3 3/8"	10" - 10 1/8"	30 lb
No. 5	12"	10"	55 lb	1' - 8"	11"	2"	1 3/4"	1'-11 1/4"	1'-1 3/4"	60 lb
No. 6	12"	10"	70 lb	2' - 4 1/4"	1' - 3 1/4"	2"	2"	2'-6 1/2"	1'-5 1/2"	85 lb

STATE OF CALIFORNIA
DEPARTMENT OF TRANSPORTATION

ELECTRICAL SYSTEMS (NON-TRAFFIC PULL BOX)

NO SCALE

RSP ES-8A DATED APRIL 15, 2016 SUPERSEDES RSP ES-8A DATED OCTOBER 30, 2015 AND RSP ES-8A DATED JULY 19, 2013 AND RSP ES-8A DATED JANUARY 20, 2012 THAT SUPPLEMENTS THE STANDARD PLANS BOOK DATED 2010.

REVISED STANDARD PLAN RSP ES-8A

2010 REVISED STANDARD PLAN RSP ES-8A

26-JUL-2016 09:54

P:\PROJ\01\0B430\drafting\sheets\0112000127va026.dgn

1-22-16

Dist	COUNTY	ROUTE	POST MILES TOTAL PROJECT	SHEET No.	TOTAL SHEETS
01	Hum	101	111.3/111.7	52	83

Theresa Gabriel
REGISTERED ELECTRICAL ENGINEER

October 30, 2015
PLANS APPROVAL DATE

REGISTERED PROFESSIONAL ENGINEER
Theresa Aziz Gabriel
No. E15129
Exp. 6-30-16
ELECTRICAL
STATE OF CALIFORNIA

THE STATE OF CALIFORNIA OR ITS OFFICERS OR AGENTS SHALL NOT BE RESPONSIBLE FOR THE ACCURACY OR COMPLETENESS OF SCANNED COPIES OF THIS PLAN SHEET.

TO ACCOMPANY PLANS DATED 06-20-16

NOTE:
Curves represent the minimum footcandle (FC).

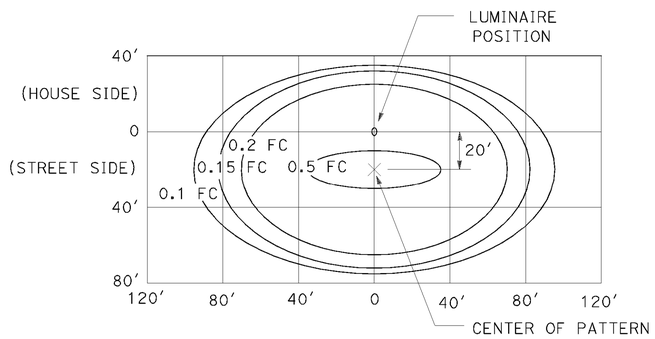

LED LUMINAIRE 165 W
34′ Mounting Height

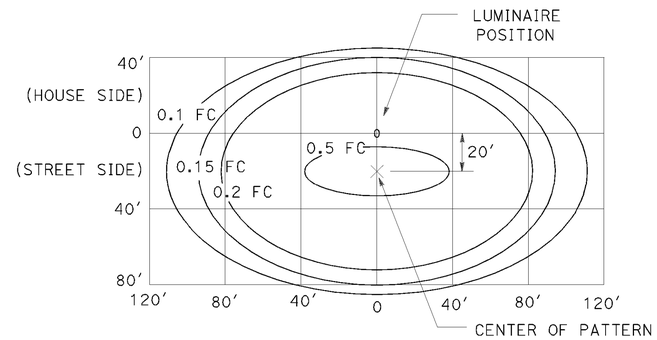

LED LUMINAIRE 235 W
40′ Mounting Height

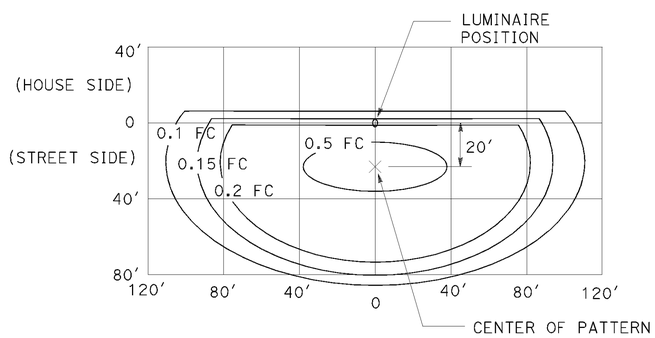

LED LUMINAIRE 235 W
40′ Mounting Height
with back side control

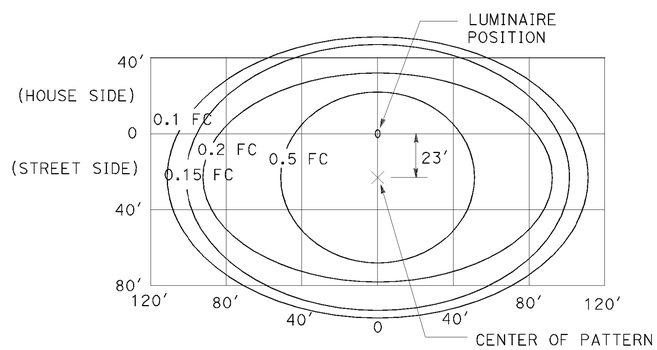

LED LUMINAIRE 300 W
40′ Mounting Height

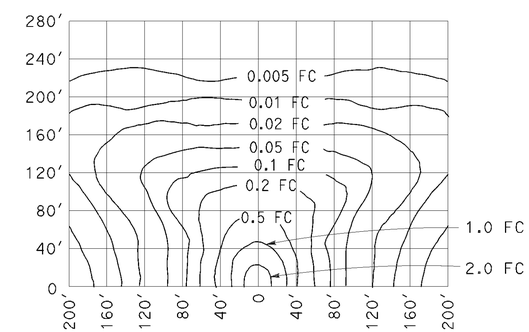

LOW-PRESSURE SODIUM LUMINAIRE 180 W
40′ Mounting Height
Lamp operated at 33,000 lm

STATE OF CALIFORNIA
DEPARTMENT OF TRANSPORTATION

ELECTRICAL SYSTEMS (ISOFOOTCANDLE CURVES)

NO SCALE

RSP ES-10A DATED OCTOBER 30, 2015 SUPERSEDES RSP ES-10A DATED JULY 19, 2013 THAT SUPPLEMENTS THE STANDARD PLANS BOOK DATED 2010.

REVISED STANDARD PLAN RSP ES-10A

2010 REVISED STANDARD PLAN RSP ES-10A

26-JUL-2016
09:54

P:\PROJ\01\0B430\drafting\sheets\0112000127va027.dgn

9-29-15

Dist	COUNTY	ROUTE	POST MILES TOTAL PROJECT	SHEET No.	TOTAL SHEETS
01	Hum	101	111.3/111.7	53	83

Theresa Gabriel
REGISTERED ELECTRICAL ENGINEER

April 15, 2016
PLANS APPROVAL DATE

REGISTERED PROFESSIONAL ENGINEER Theresa Aziz Gabriel No. E15129 Exp. 6-30-16 ELECTRICAL STATE OF CALIFORNIA

THE STATE OF CALIFORNIA OR ITS OFFICERS OR AGENTS SHALL NOT BE RESPONSIBLE FOR THE ACCURACY OR COMPLETENESS OF SCANNED COPIES OF THIS PLAN SHEET.

TO ACCOMPANY PLANS DATED 06-20-16

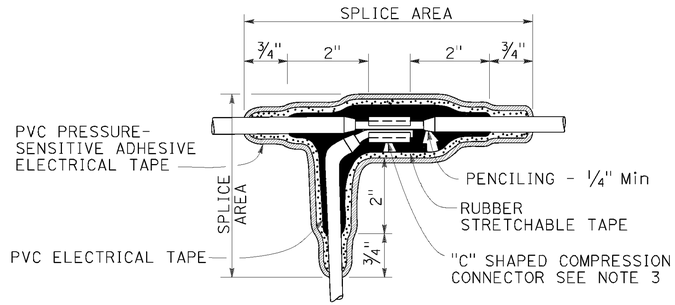

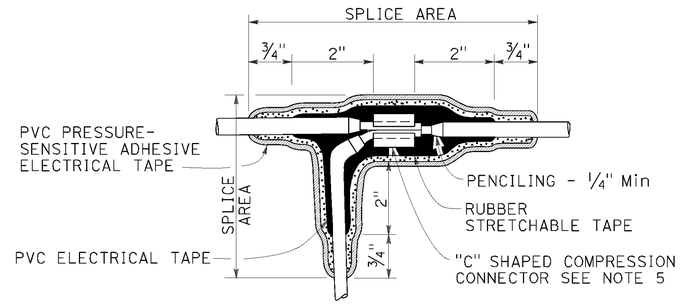

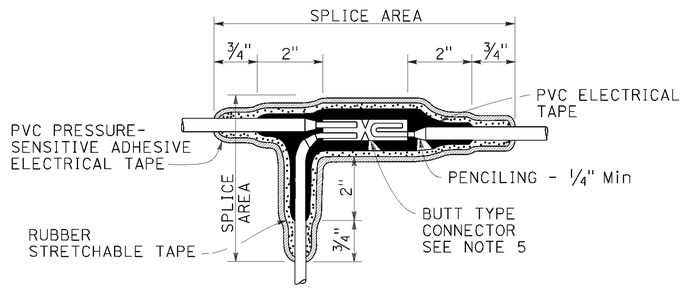

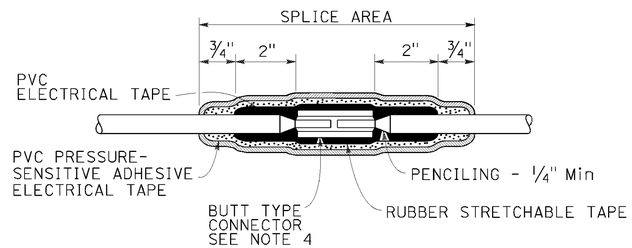

NOTES:

1. Dimensions are minimum.
2. Rubber tapes shall be rolled after application.
3. Between 1 free-end and 1 through conductor.
4. Between 2 free-end conductors.
5. Between 3 free-end conductors.

TYPICAL SPLICE INSULATION METHOD B

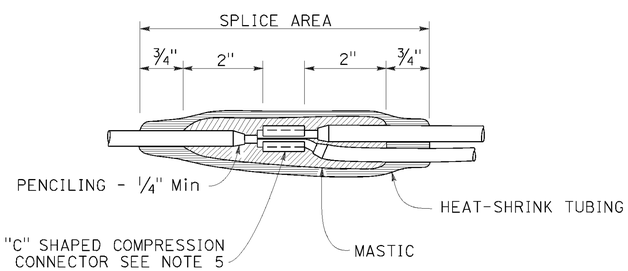

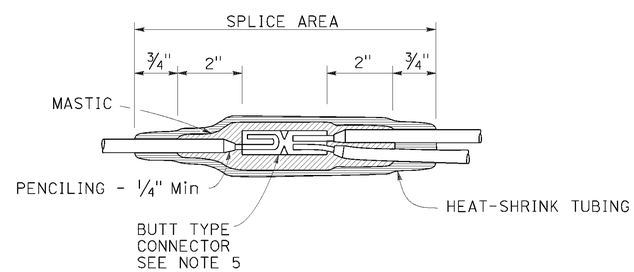

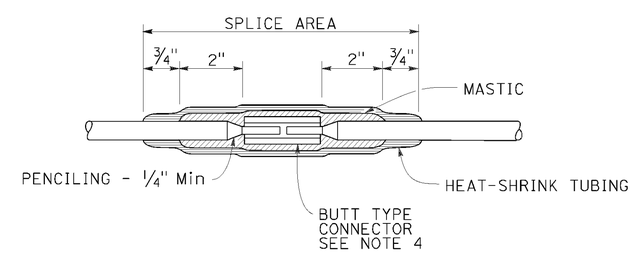

TYPICAL SPLICE INSULATION HEAT-SHRINK TUBING

STATE OF CALIFORNIA
DEPARTMENT OF TRANSPORTATION

ELECTRICAL SYSTEMS (SPLICE INSULATION METHODS DETAILS)

NO SCALE

RSP ES-13A DATED APRIL 15, 2016 SUPERSEDES RSP ES-13A DATED OCTOBER 30, 2015 AND STANDARD PLAN ES-13A DATED MAY 20, 2011 - PAGE 491 OF THE STANDARD PLANS BOOK DATED 2010.

REVISED STANDARD PLAN RSP ES-13A

2010 REVISED STANDARD PLAN RSP ES-13A

26-JUL-2016 09:55

P:\PROJ\01\08430\drafting\sheets\0112000127va028.dgn

1-22-16

Dist	COUNTY	ROUTE	POST MILES TOTAL PROJECT	SHEET No.	TOTAL SHEETS
01	Hum	101	111.3/111.7	54	83

Theresa Gabriel
REGISTERED ELECTRICAL ENGINEER

April 15, 2016
PLANS APPROVAL DATE

REGISTERED PROFESSIONAL ENGINEER Theresa Aziz Gabriel No. E15129 Exp. 6-30-16 ELECTRICAL STATE OF CALIFORNIA

THE STATE OF CALIFORNIA OR ITS OFFICERS OR AGENTS SHALL NOT BE RESPONSIBLE FOR THE ACCURACY OR COMPLETENESS OF SCANNED COPIES OF THIS PLAN SHEET.

TO ACCOMPANY PLANS DATED 06-20-16

CIRCUIT VOLTAGE	FUSE VOLTAGE RATING	FUSE CURRENT RATING						
		HPS LAMP BALLAST		LOW PRESSURE SODIUM BALLAST	INDUCTION SIGN LIGHTING	SINGLE PHASE (TWO WIRE) TRANSFORMERS (PRIMARY SIDE)		
		70 W	100 W	180 W	85 W	1 kVA	2 kVA	3 kVA
120 V	250 V	5 A	5 A	5 A	5 A	10 A	20 A	30 A
240 V	250 V	5 A	5 A	5 A	5 A	6 A	10 A	20 A
480 V	500-600 V	5 A	5 A	3 A	1 A (SEE NOTE 2)	3 A	6 A	10 A

NOTES:

1. Primary lines of multiple ballasts shall be provided with fused connectors. Fuse ratings shall be as noted above.
2. See Revised Standard Plan RSP ES-15D, Type SC3 control.

FUSE RATINGS FOR FUSED CONNECTORS

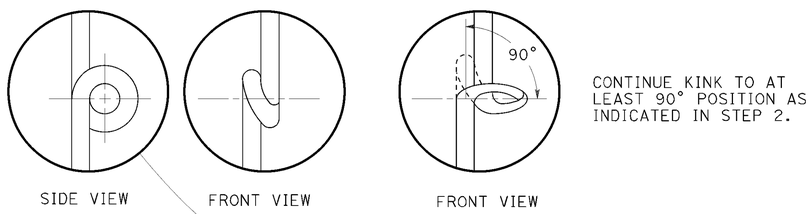

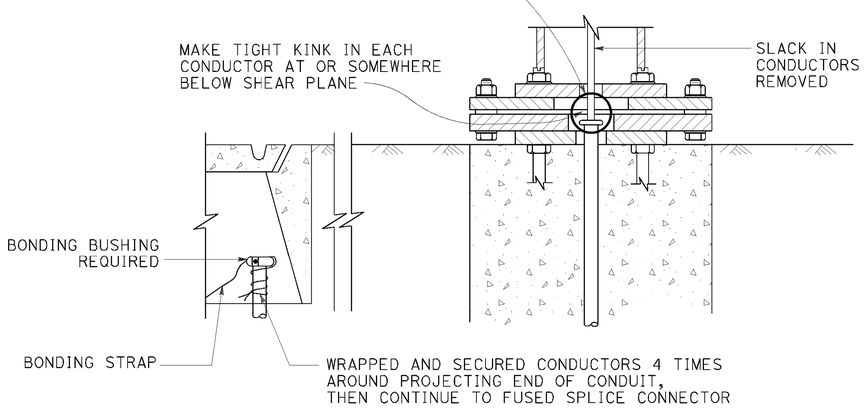

KINKING DETAIL FOR SLIP BASE STANDARDS

DETAIL A

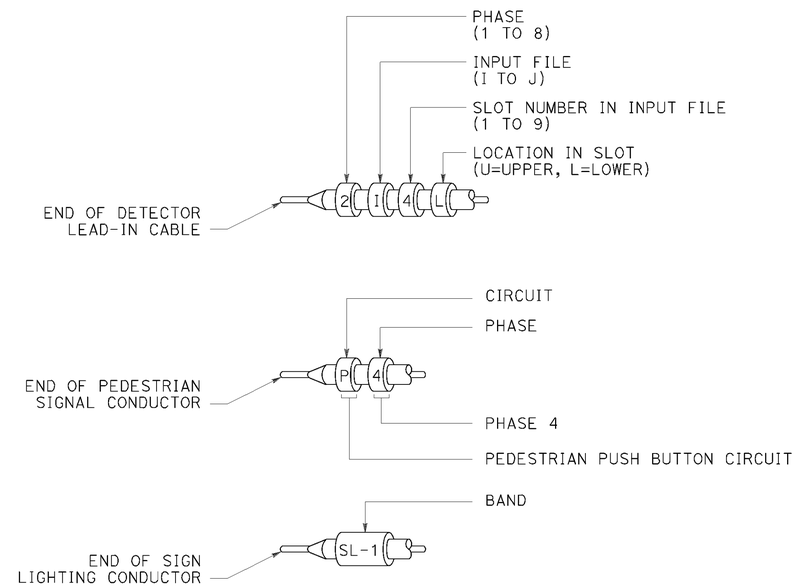

TYPICAL BANDING DETAILS

DETAIL B

STATE OF CALIFORNIA
DEPARTMENT OF TRANSPORTATION

ELECTRICAL SYSTEMS (FUSE RATING, KINKING AND BANDING DETAIL)

NO SCALE

RSP ES-13B DATED APRIL 15, 2016 SUPERSEDES STANDARD PLAN ES-13B DATED MAY 20, 2011 - PAGE 492 OF THE STANDARD PLANS BOOK DATED 2010.

REVISED STANDARD PLAN RSP ES-13B

2010 REVISED STANDARD PLAN RSP ES-13B

26-JUL-2016 09:55

P:\PROJ\01\0B430\drafting\sheets\0112000127va029.dgn

1-12-16

Dist	COUNTY	ROUTE	POST MILES TOTAL PROJECT	SHEET No.	TOTAL SHEETS
01	Hum	101	111.3/111.7	55	83

Gregory A. Balzer
LICENSED LANDSCAPE ARCHITECT

July 19, 2013
PLANS APPROVAL DATE

THE STATE OF CALIFORNIA OR ITS OFFICERS OR AGENTS SHALL NOT BE RESPONSIBLE FOR THE ACCURACY OR COMPLETENESS OF SCANNED COPIES OF THIS PLAN SHEET.

LICENSED LANDSCAPE ARCHITECT
Gregory A. Balzer 2016
C.A. License No. 2-28-15
Renewal Date 7-19-13
Date
STATE OF CALIFORNIA

TO ACCOMPANY PLANS DATED 06-20-16

A

AB	AGGREGATE BASE
ABS	ACRYLONITRILE-BUTADIENE-STYRENE
AC	ASPHALT CONCRETE
ACC	ARMOR-CLAD CONDUCTORS
Adj	ADJACENT/ADJUSTABLE
AIC	AUXILIARY IRRIGATION CONTROLLER
Alt	ALTERNATIVE
AMEND	AMENDMENT
ARV	AIR RELEASE VALVE
AUTO	AUTOMATIC
AUX	AUXILIARY
AVB	ATMOSPHERIC VACUUM BREAKER

B

B&B	BALLED AND BURLAPPED
B/B	BRASS/BRONZE
B/B/PL	BRASS/BRONZE/PLASTIC
B/PL	BRASS/PLASTIC
BFM	BONDED FIBER MATRIX
Bit Ctd	BITUMINOUS COATED
BP	BOOSTER PUMP
BPA	BACKFLOW PREVENTER ASSEMBLY
BPE	BACKFLOW PREVENTER ENCLOSURE
BV	BALL VALVE

C

C	CONDUIT
CAP	CORRUGATED ALUMINUM PIPE
CARV	COMBINATION AIR RELEASE VALVE
CB	COUPLING BAND
CCA	CAM COUPLER ASSEMBLY
CEC	CONTROLLER ENCLOSURE CABINET
CHDPE	CORRUGATED HIGH DENSITY POLYETHYLENE
CL	CHAIN LINK
CNC	CONTROL AND NEUTRAL CONDUCTORS
Conc	CONCRETE
CP	COPPER PIPE
CS	COMPOST SOCK
CSP	CORRUGATED STEEL PIPE
CST	CENTER STRIP
CV	CHECK VALVE

D

Dia	DIAMETER
DIP	DUCTILE IRON PIPE
DIT	DRIP IRRIGATION TUBING
DG	DECOMPOSED GRANITE
DN	DIAMETER NOMINAL
DVA	DRIP VALVE ASSEMBLY

E

EC	EROSION CONTROL
ECTC	EROSION CONTROL TECHNOLOGY COUNCIL
Elect	ELECTRIC/ELECTRICAL
Elev	ELEVATION
ELL	ELBOW
ENCL	ENCLOSURE
EP	EDGE OF PAVEMENT
ES	EDGE OF SHOULDER
EST	END STRIP
ESTB	ESTABLISHMENT
ETW	EDGE OF TRAVELED WAY

F

F	FULL CIRCLE
F/P	FULL/PART CIRCLE
FCV	FLOW CONTROL VALVE
FERT	FERTILIZER
FG	FINISHED GRADE
FH	FLEXIBLE HOSE
FIPT	FEMALE IRON PIPE THREAD
FIS	FERTILIZER INJECTOR SYSTEM
FL	FLOW LINE
FR	FIBER ROLL
FS	FLOW SENSOR
FSC	FLOW SENSOR CABLE
FV	FLUSH VALVE

G

Galv	GALVANIZED
GARV	GARDEN VALVE
GARVA	GARDEN VALVE ASSEMBLY
GM	GRAVEL MULCH
GPH	GALLONS PER HOUR
GPM	GALLONS PER MINUTE
GSP	GALVANIZED STEEL PIPE
GV	GATE VALVE

H

H	HALF CIRCLE
HDPE	HIGH DENSITY POLYETHYLENE
HP	HORSEPOWER/HINGE POINT
HPL	HIGH PRESSURE LINE
Hwy	HIGHWAY

I

IC	IRRIGATION CONTROLLER
ICC	IRRIGATION CONTROLLER(S) IN CONTROLLER ENCLOSURE CABINET
ID	INSIDE DIAMETER
IFS	IRRIGATION FILTRATION SYSTEM
IPS	IRON PIPE SIZE
IPT	IRON PIPE THREAD
Irr	IRRIGATION

L

L	LENGTH

M

Max	MAXIMUM
MBGR	METAL BEAM GUARD RAILING
MCV	MANUAL CONTROL VALVE
MIC	MASTER IRRIGATION CONTROLLER
Min	MINIMUM
MIPT	MALE IRON PIPE THREAD
Misc	MISCELLANEOUS
Mtl	MATERIAL
MVP	MAINTENANCE VEHICLE PULLOUT

N

NCN	NO COMMON NAME
NL	NOZZLE LINE
No.	NUMBER
NPT	NATIONAL PIPE THREAD

O

O/C	ON CENTER
OD	OUTSIDE DIAMETER
OL	OVERLAP

P

P	PART CIRCLE
PB	PULL BOX
PCC	PORTLAND CEMENT CONCRETE
PE	POLYETHYLENE
Pkt	PACKET
PL	PLASTIC
PLS	PURE LIVE SEED
PLT	PLANT/PLANTING
PLT ESTB	PLANT ESTABLISHMENT
PM	POST MILE
PR	PRESSURE RATED
PRLV	PRESSURE RELIEF VALVE
PRV	PRESSURE REGULATING VALVE
PVC	POLYVINYL CHLORIDE
Pvmt	PAVEMENT

Q

Q	QUARTER CIRCLE
QCV	QUICK COUPLING VALVE

R

R	RADIUS
RCP	REINFORCED CONCRETE PIPE
RCV	REMOTE CONTROL VALVE
RCVM	REMOTE CONTROL VALVE (MASTER)
RCVMF	REMOTE CONTROL VALVE (MASTER) W/FLOW SENSOR
RCVP	REMOTE CONTROL VALVE W/PRESSURE REGULATOR
RCW	RECYCLED WATER
RECP	ROLLED EROSION CONTROL PRODUCT
REQ	REQUIRED
RICS	REMOTE IRRIGATION CONTROL SYSTEM
R/W	RIGHT OF WAY

S

S	SLIP
SCH	SCHEDULE
SF	STATE-FURNISHED
Shld	SHOULDER
Sq	SQUARE
SST	SIDE STRIP
Sta	STATION
Std	STANDARD
SW	SIDEWALK/SOUND WALL

T

T	THIRD CIRCLE/THREAD
TLS	TRUCK LOADING STANDPIPE
TQ	THREE QUARTER CIRCLE
TRM	TURF REINFORCEMENT MAT
TT	TWO-THIRDS CIRCLE
TWSA	TREE WELL SPRINKLER ASSEMBLY
Typ	TYPICAL

U

UG	UNDERGROUND

W

W	WIDTH
W/	WITH
WM	WATER METER
WS	WYE STRAINER
WSA	WYE STRAINER ASSEMBLY
WSP	WELDED STEEL PIPE
WWM	WELDED WIRE MESH

NOTE:

For additional abbreviations, see Standard Plans A10A and A10B.

STATE OF CALIFORNIA
DEPARTMENT OF TRANSPORTATION

LANDSCAPE AND EROSION CONTROL ABBREVIATIONS

NO SCALE

RSP H1 DATED JULY 19, 2013 SUPERSEDES STANDARD PLAN H1 DATED MAY 20, 2011 - PAGE 218 OF THE STANDARD PLANS BOOK DATED 2010.

REVISED STANDARD PLAN RSP H1

2010 REVISED STANDARD PLAN RSP H1

26-JUL-2016
09:55

P:\PROJ\01\0B430\drafting\sheets\0112000127va030.dgn

6-28-13

Dist	COUNTY	ROUTE	POST MILES TOTAL PROJECT	SHEET No.	TOTAL SHEETS
01	Hum	101	111.3/111.7	56	83

LICENSED LANDSCAPE ARCHITECT

July 15, 2016
PLANS APPROVAL DATE

LICENSED LANDSCAPE ARCHITECT
Michael V. Ferrara 3859
Registration
9-30-17
Renewal Date
Date
STATE OF CALIFORNIA

THE STATE OF CALIFORNIA OR ITS OFFICERS OR AGENTS SHALL NOT BE RESPONSIBLE FOR THE ACCURACY OR COMPLETENESS OF SCANNED COPIES OF THIS PLAN SHEET.

TO ACCOMPANY PLANS DATED 06-20-16

EXISTING	NEW	ITEM DESCRIPTION
		WATER METER (WM)
		BACKFLOW PREVENTER ASSEMBLY (BPA)
		BACKFLOW PREVENTER ENCLOSURE (BPE)
		BOOSTER PUMP (BP)
		TRUCK LOADING STANDPIPE (TLS)
	FS	FLOW SENSOR (FS)
		MASTER IRRIGATION CONTROLLER (MIC)
		AUXILIARY IRRIGATION CONTROLLER (AIC)
		IRRIGATION CONTROLLER (IC) IRRIGATION CONTROLLER (IC) (BATTERY) IRRIGATION CONTROLLER (IC) (SOLAR) IRRIGATION CONTROLLER (IC) (TWO WIRE)
		IRRIGATION CONTROLLER(S) IN CONTROLLER ENCLOSURE CABINET (ICC)
acc	ACC	ARMOR-CLAD CONDUCTORS (ACC)
		CONTROL AND NEUTRAL CONDUCTORS (CNC)
		IRRIGATION CONDUIT
		IRRIGATION SLEEVE
dip	DIP	DUCTILE IRON PIPE (SUPPLY LINE) (MAIN) (DIP)
		GALVANIZED STEEL PIPE (SUPPLY LINE) (MAIN) (GSP)
		GALVANIZED STEEL PIPE (SUPPLY LINE) (LATERAL) (GSP)
		PLASTIC PIPE (SUPPLY LINE) (MAIN)
		PLASTIC PIPE (SUPPLY LINE) (LATERAL)
cp	CP	COPPER PIPE (SUPPLY LINE)
dit	DIT	DRIP IRRIGATION TUBING
		REMOTE CONTROL VALVE (RCV) REMOTE CONTROL VALVE (MASTER) (RCVM) REMOTE CONTROL VALVE (MASTER) W/FLOW METER (RCVMF)
P	P	REMOTE CONTROL VALVE W/PRESSURE REGULATOR (RCVP)
		EXISTING MANUAL CONTROL VALVE (MCV)
	V	DRIP VALVE ASSEMBLY (DVA)
	Y	WYE STRAINER ASSEMBLY (WSA)

EXISTING	NEW	ITEM DESCRIPTION
		GATE VALVE (GV)
		BALL VALVE (BV)
		QUICK COUPLING VALVE (QCV)
		CAM COUPLER ASSEMBLY (CCA)
		GARDEN VALVE ASSEMBLY (GARVA)
		PRESSURE REGULATING VALVE (PRV)
		PRESSURE RELIEF VALVE (PRLV)
		FLOW CONTROL VALVE (FCV)
		COMBINATION AIR RELEASE VALVE (CARV)
		CHECK VALVE (CV)
		FLUSH VALVE (FV)
		EXISTING NOZZLE LINE W/TURNING UNION
		EXISTING IRRIGATION SYSTEM
		EXISTING IRRIGATION SYSTEM TO BE REMOVED
		CHAIN LINK GATE
		QUICK COUPLING VALVE W/SPRINKLER PROTECTOR
3	3	SPRINKLER W/SPRINKLER PROTECTOR
	C	CONNECT TO EXISTING SYSTEM
		CAP
		CAP EXISTING
	\\\FR\\\	FIBER ROLL
	\\\CS\\\	COMPOST SOCK

RCV SIZE
IRRIGATION CONTROLLER
CONTROLLER STATION
VALVE IN PARALLEL (IF APPLICABLE)
GPM
QUANTITY OF SPRINKLERS (WHEN SHOWN)

* 2½"-A-2b-40-60

VALVE CODE

* VALVE CODES FOR EXISTING VALVES ARE SHOWN IN A DASHED ENCLOSURE.

STATE OF CALIFORNIA
DEPARTMENT OF TRANSPORTATION

LANDSCAPE AND EROSION CONTROL SYMBOLS

NO SCALE

RSP H2 DATED JULY 15, 2016 SUPERSEDES RSP H2 DATED NOVEMBER 15, 2013 AND RSP H2 DATED JULY 19, 2013 AND STANDARD PLAN H2 DATED MAY 20, 2011 - PAGE 219 OF THE STANDARD PLANS BOOK DATED 2010.

REVISED STANDARD PLAN RSP H2

2010 REVISED STANDARD PLAN RSP H2

26-JUL-2016 15:50

P:\PROJ\01\0B430\drafting\sheets\0112000127va031.dgn

5-24-16

Dist	COUNTY	ROUTE	POST MILES TOTAL PROJECT	SHEET No.	TOTAL SHEETS
01	Hum	101	111.3/111.7	57	83

REGISTERED CIVIL ENGINEER

October 30, 2015
PLANS APPROVAL DATE

REGISTERED PROFESSIONAL ENGINEER Srikanth N. Balasubramanian No. C56426 Exp. 6-30-17 CIVIL STATE OF CALIFORNIA

THE STATE OF CALIFORNIA OR ITS OFFICERS OR AGENTS SHALL NOT BE RESPONSIBLE FOR THE ACCURACY OR COMPLETENESS OF SCANNED COPIES OF THIS PLAN SHEET.

TO ACCOMPANY PLANS DATED 06-20-16

ABBREVIATIONS:

TE TAPERED EDGE

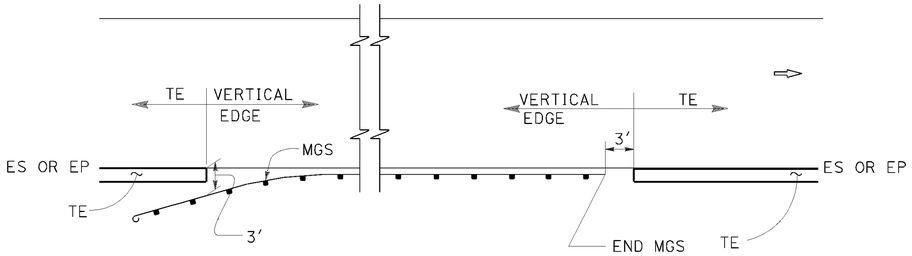

MGS

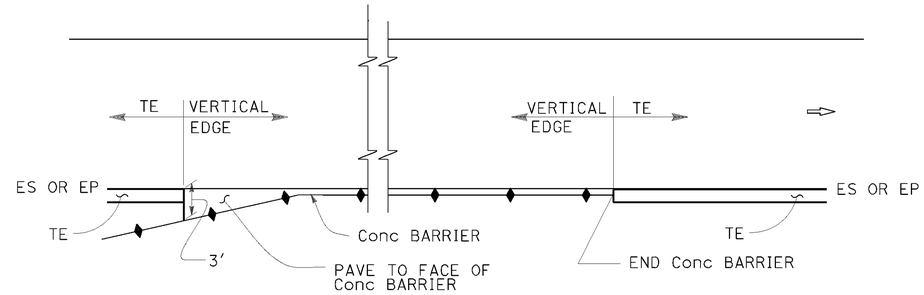

CONCRETE BARRIER

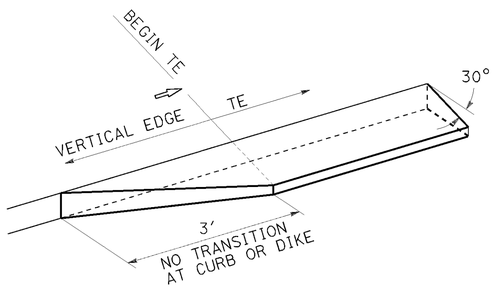

TRANSITION DETAIL FOR CONCRETE ONLY

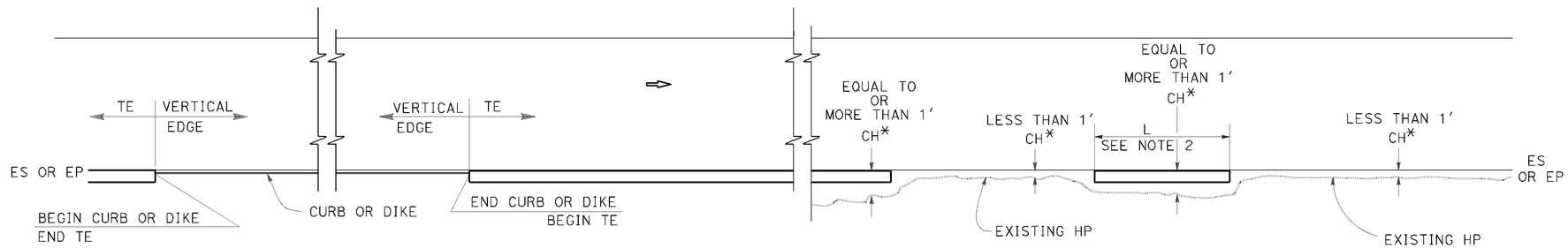

CURB OR DIKE

NARROW SIDE SLOPE

* CH = Distance from ES or EP to existing HP.

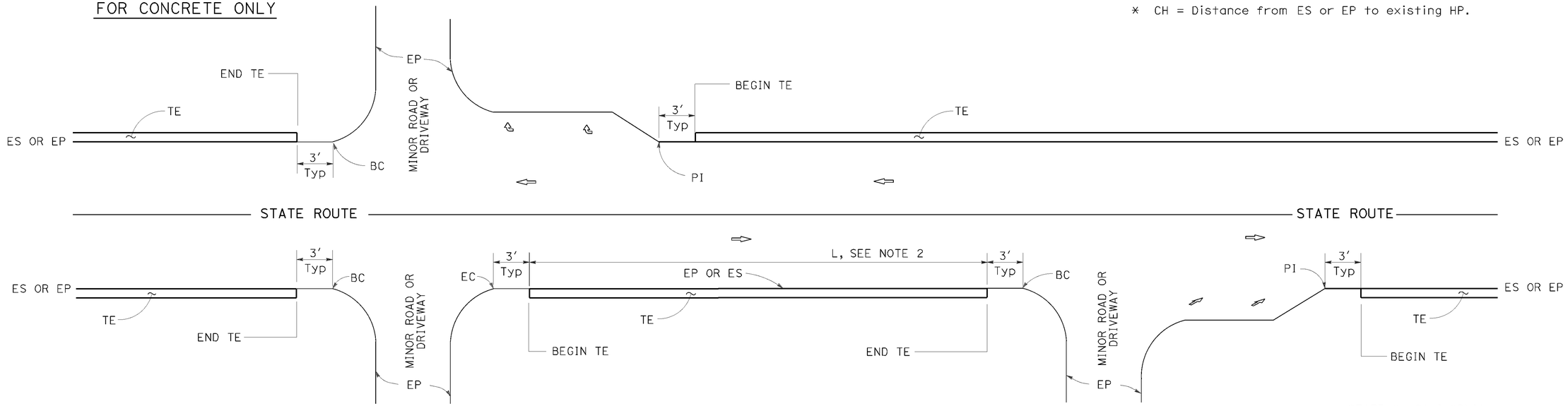

INTERTECTION

MINOR ROADWAY OR DRIVEWAY

DRIVEWAY AND INTERSECTION

STATE OF CALIFORNIA
DEPARTMENT OF TRANSPORTATION

PAVEMENT EDGE TREATMENTS

NO SCALE

NOTES:

1. For details not shown, see Revised Standard Plans RSP P75 and RSP P76.
2. Tapered edge is optional when L is less than 30′.

RSP P74 DATED OCTOBER 30, 2015 SUPERSEDES RSP P74 DATED NOVEMBER 15, 2013 AND RSP P74 DATED JANUARY 20, 2012 THAT SUPPLEMENTS THE STANDARD PLANS BOOK DATED 2010.

REVISED STANDARD PLAN RSP P74

2010 REVISED STANDARD PLAN RSP P74

26-JUL-2016
09:55

P:\PROJ\01\QB430\drafting\sheets\0112000127va032.dgn

10-13-15

Dist	COUNTY	ROUTE	POST MILES TOTAL PROJECT	SHEET No.	TOTAL SHEETS
01	Hum	101	111.3/111.7	58	83

REGISTERED CIVIL ENGINEER

October 30, 2015
PLANS APPROVAL DATE

REGISTERED PROFESSIONAL ENGINEER Srikanth N. Balasubramanian No. C56426 Exp. 6-30-17 CIVIL STATE OF CALIFORNIA

THE STATE OF CALIFORNIA OR ITS OFFICERS OR AGENTS SHALL NOT BE RESPONSIBLE FOR THE ACCURACY OR COMPLETENESS OF SCANNED COPIES OF THIS PLAN SHEET.

TO ACCOMPANY PLANS DATED 06-20-16

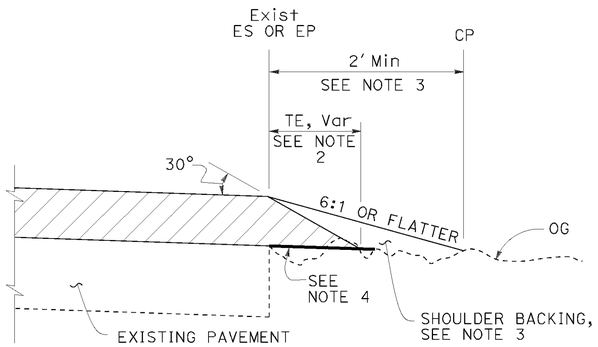

CASE A
Tapered Edge

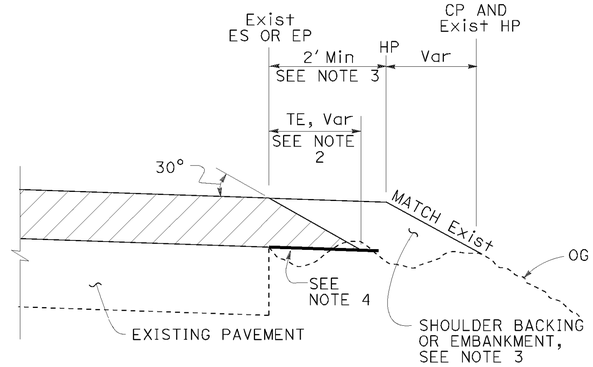

CASE B
Tapered Edge

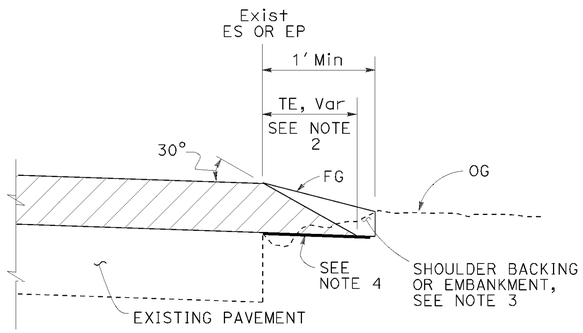

CASE C
Tapered Edge

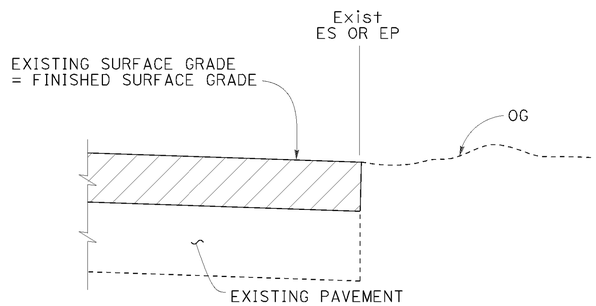

CASE D
Vertical Edge

LEGEND:

- HMA OVERLAY
- HMA OR CONCRETE OVERLAY
- CONCRETE OVERLAY

ABBREVIATIONS:

TE TAPERED EDGE
TT TOTAL THICKNESS OF TE

TABLE A
EDGE TREATMENT FOR VARIOUS OVERLAY THICKNESS AND CONDITIONS

	OVERLAY THICKNESS	
FIELD CONDITION	LESS THAN 0.15'	0.15' OR MORE
Exist SLOPE 6:1 OR FLATTER	CASE E	CASE A
Exist SLOPE 3:1 TO 6:1	CASE E	CASE B
Exist SLOPE STEEPER THAN 3:1	CASE F	CASE F
CUT SECTION (REPLACE, COLD PLANE, MILL PAVEMENT)	CASE D	CASE C

ADDITIONAL HMA OR CONCRETE QUANTITIES FOR TE/SIDE/MILE

TYPICAL CROSS SECTION	TT	TOTAL ADDITIONAL MATERIAL FOR TE/SIDE/MILE		
		HMA (TON)	CONCRETE (CY)*	CONCRETE (CY)**
TT	0.15'	7.7	NA	NA
	0.20'	13.7	NA	NA
	0.30'	30.9	NA	NA
	0.40'	54.9	NA	NA
	0.45'	69.4	NA	NA
TT 0.43'	0.50'	84.2	NA	NA
	0.60'	113.9	NA	NA
	0.70'	143.6	70.9	94.2
	0.80'	173.3	85.6	112.2
	0.90'	203.0	100.3	130.2
	1.00'	232.7	114.9	148.2
	1.10'	262.4	129.6	166.2
	1.20'	292.1	144.3	184.2

* For Detail "A"
** For Optional Detail "A"

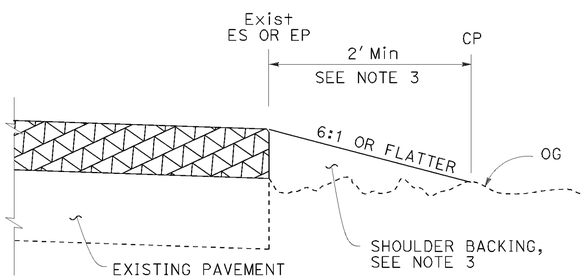

CASE E
Vertical Edge

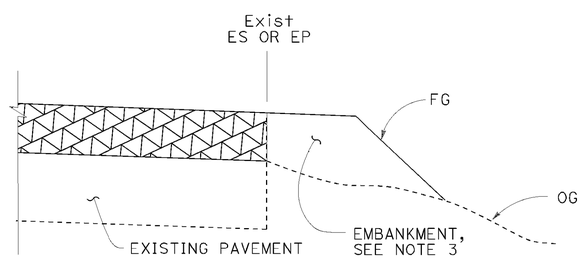

CASE F
Vertical Edge
* See Table A and Revised Std Plan RSP P74

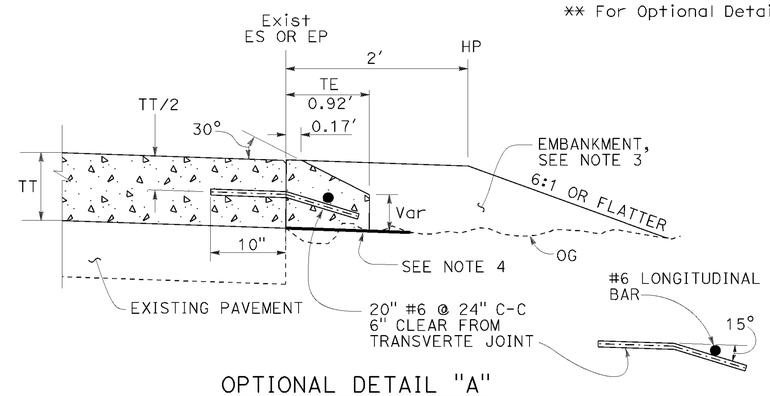

OPTIONAL DETAIL "A"
For concrete overlay
See Note 5

NOTES:

1. For limits of tapered edge and vertical edge treatments, see Revised Standard Plan RSP P74.
2. Details shown for HMA overlay thickness less than 0.43'. See Detail "A" for HMA overlay thickness more than 0.43' or concrete overlay.
3. For locations and limits of shoulder backing or embankment see project plans.
4. Grade existing ground to place tapered edge. 1' minimum width
5. Tapered edge transverse joint must match overlay transverse joint. End of #6 longitudinal bar must be 2" ±½" clear from transverse joint.
6. Tapered edge is not needed in the area of MGS, barrier, right turn lane and acceleration lane. See Revised Standard Plan RSP P74.

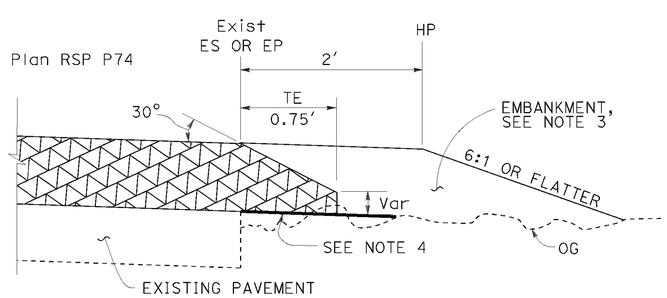

DETAIL "A"
For HMA overlay thickness more than 0.43' or concrete overlay

STATE OF CALIFORNIA
DEPARTMENT OF TRANSPORTATION

PAVEMENT EDGE TREATMENTS-OVERLAYS

NO SCALE

RSP P75 DATED OCTOBER 30, 2015 SUPERSEDES RSP P75 DATED NOVEMBER 15, 2013 AND RSP P75 DATED JANUARY 20, 2012 THAT SUPPLEMENTS THE STANDARD PLANS BOOK DATED 2010.

REVISED STANDARD PLAN RSP P75

2010 REVISED STANDARD PLAN RSP P75

26-JUL-2016
09:56

P:\PROJ\01\0B430\drafting\sheets\0112000127va033.dgn

7-2-15

Dist	COUNTY	ROUTE	POST MILES TOTAL PROJECT	SHEET No.	TOTAL SHEETS
01	Hum	101	111.3/111.7	59	83

REGISTERED CIVIL ENGINEER

July 19, 2013
PLANS APPROVAL DATE

REGISTERED PROFESSIONAL ENGINEER
Gurinderpal Bhullar
No. C48815
Exp. 9-30-14
CIVIL
STATE OF CALIFORNIA

THE STATE OF CALIFORNIA OR ITS OFFICERS OR AGENTS SHALL NOT BE RESPONSIBLE FOR THE ACCURACY OR COMPLETENESS OF SCANNED COPIES OF THIS PLAN SHEET.

TO ACCOMPANY PLANS DATED 06-20-16

TABLE 1

TAPER LENGTH CRITERIA AND CHANNELIZING DEVICE SPACING

SPEED (S)	MINIMUM TAPER LENGTH * FOR WIDTH OF OFFSET 12 FEET (W)				MAXIMUM CHANNELIZING DEVICE SPACING		
					X	Y	Z **
	TANGENT 2L	MERGING L	SHIFTING L/2	SHOULDER L/3	TAPER	TANGENT	CONFLICT
mph	ft	ft	ft	ft	ft	ft	ft
20	160	80	40	27	20	40	10
25	250	125	63	42	25	50	12
30	360	180	90	60	30	60	15
35	490	245	123	82	35	70	17
40	640	320	160	107	40	80	20
45	1080	540	270	180	45	90	22
50	1200	600	300	200	50	100	25
55	1320	660	330	220	55	110	27
60	1440	720	360	240	60	120	30
65	1560	780	390	260	65	130	32
70	1680	840	420	280	70	140	35

* - For other offsets, use the following merging taper length formula for L:
For speed of 40 mph or less, $L = WS^2/60$
For speed of 45 mph or more, $L = WS$

Where: L = Taper length in feet
W = Width of offset in feet
S = Posted speed limit, off-peak 85th-percentile speed prior to work starting, or the anticipated operating speed in mph

** - Use for taper and tangent sections where there are no pavement markings or where there is a conflict between existing pavement markings and channelizers (CA).

TABLE 2

LONGITUDINAL BUFFER SPACE AND FLAGGER STATION SPACING

SPEED *	Min D **	DOWNGRADE Min D ***		
		-3%	-6%	-9%
mph	ft	ft	ft	ft
20	115	116	120	126
25	155	158	165	173
30	200	205	215	227
35	250	257	271	287
40	305	315	333	354
45	360	378	400	427
50	425	446	474	507
55	495	520	553	593
60	570	598	638	686
65	645	682	728	785
70	730	771	825	891

* - Speed is posted speed limit, off-peak 85th-percentile speed prior to work starting, or the anticipated operating speed in mph

** - Longitudinal buffer space or flagger station spacing

*** - Use on sustained downgrade steeper than -3 percent and longer than 1 mile.

TABLE 3

ADVANCE WARNING SIGN SPACING

ROAD TYPE	DISTANCE BETWEEN SIGNS *		
	A	B	C
	ft	ft	ft
URBAN - 25 mph OR LESS	100	100	100
URBAN - MORE THAN 25 mph TO 40 mph	250	250	250
URBAN - MORE THAN 40 mph	350	350	350
RURAL	500	500	500
EXPRESSWAY / FREEWAY	1000	1500	2640

* - The distances are approximate, are intended for guidance purposes only, and should be applied with engineering judgment. These distances should be adjusted by the Engineer for field conditions, if necessary, by increasing or decreasing the recommmended distances.

STATE OF CALIFORNIA
DEPARTMENT OF TRANSPORTATION

TRAFFIC CONTROL SYSTEM TABLES FOR LANE AND RAMP CLOSURES

NO SCALE

RSP T9 DATED JULY 19, 2013 SUPERSEDES RSP T9 DATED APRIL 19, 2013 THAT SUPPLEMENTS THE STANDARD PLANS BOOK DATED 2010.

REVISED STANDARD PLAN RSP T9

2010 REVISED STANDARD PLAN RSP T9

P:\PROJ\01\0B430\drafting\sheets\0112000127va034.dgn
09:56 02-JUL-2016
4-30-13

DIST	COUNTY	ROUTE	POST MILES TOTAL PROJECT	SHEET No.	TOTAL SHEETS
01	Hum	101	111.3/111.7	60	83

Eric Watson 3-4-16
REGISTERED CIVIL ENGINEER DATE

June 20, 2016
PLANS APPROVAL DATE

REGISTERED PROFESSIONAL ENGINEER Eric Watson No. 64273 Exp. 6/30/17 CIVIL STATE OF CALIFORNIA

The State of California or its officers or agents shall not be responsible for the accuracy or completeness of scanned copies of this plan sheet.

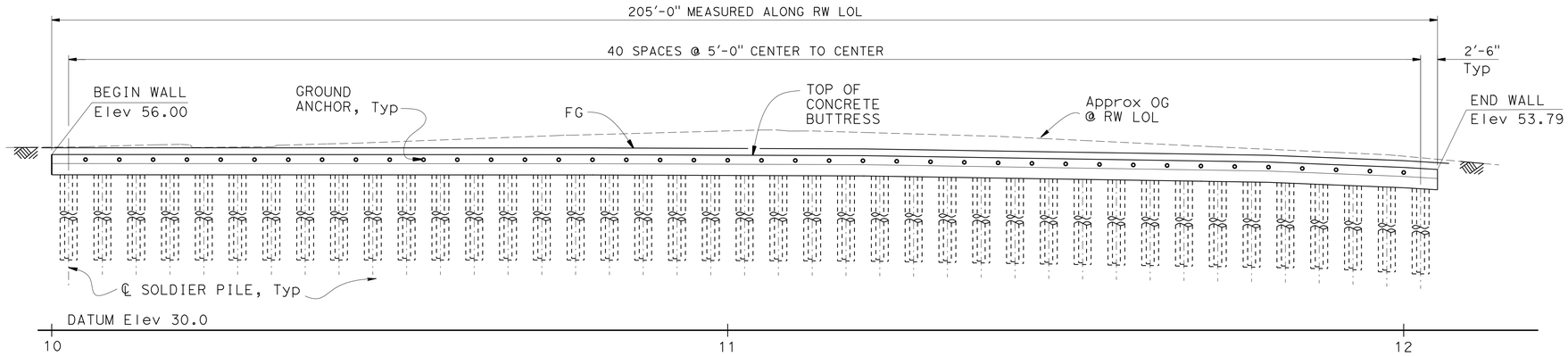

MIRRORED ELEVATION

1" = 10'

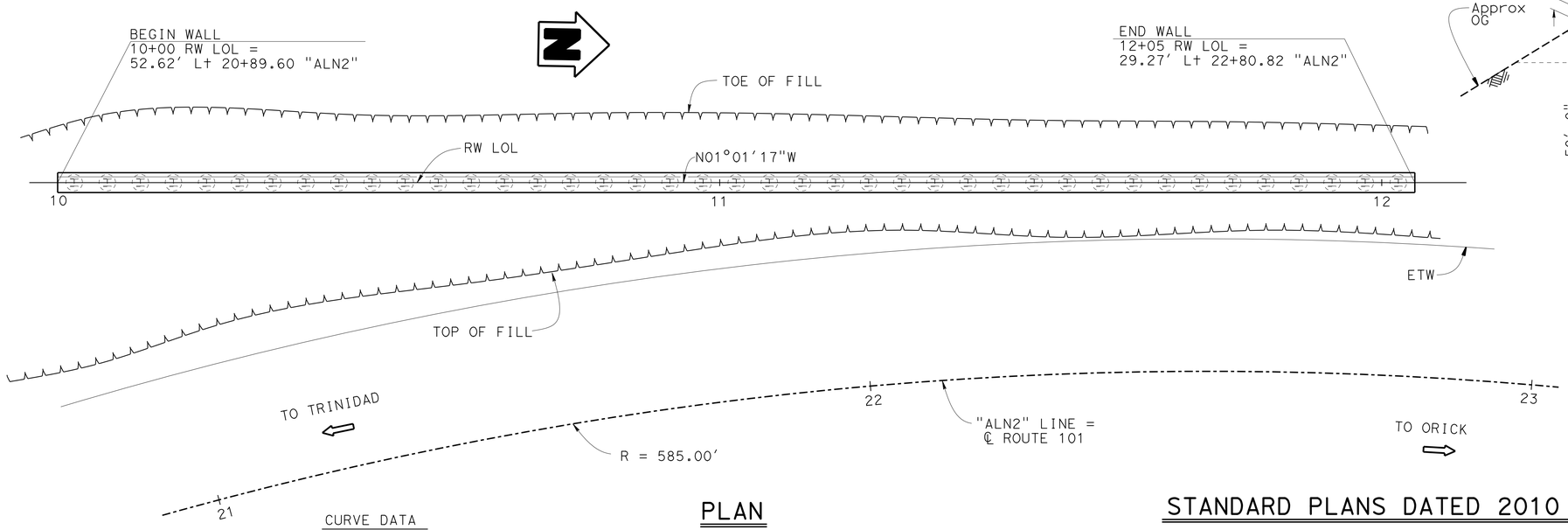

CURVE DATA

R = 585.00'
D = 9°47'38.94"
Δ = 42°53'45.46"
L = 437.98'

PLAN

1" = 10'

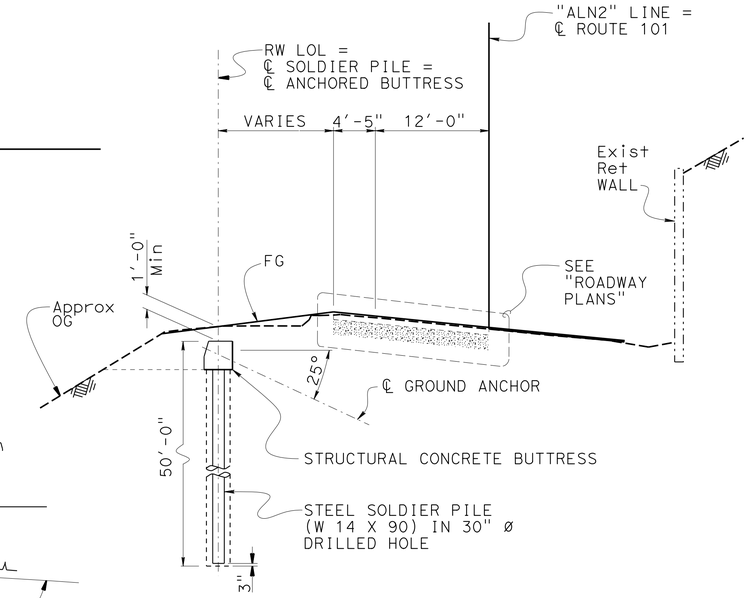

TYPICAL SECTION

⅛" = 1'-0"

INDEX TO PLANS

SHEET NO.	TITLE
1.	GENERAL PLAN
2.	STRUCTURE PLAN NO. 1
3.	STRUCTURE PLAN NO. 2
4.	FOUNDATION PLAN
5.	BUTTRESS DETAILS
6.	GROUND ANCHOR DETAILS
7.	LOG OF TEST BORINGS

STANDARD PLANS DATED 2010

	A10A	ABBREVIATIONS (SHEET 1 OF 2)
RSP	A10B	ABBREVIATIONS (SHEET 2 OF 2)
	A10C	LINES AND SYMBOLS (SHEET 1 OF 3)
	A10D	LINES AND SYMBOLS (SHEET 2 OF 3)
	A10E	LINES AND SYMBOLS (SHEET 3 OF 3)
	A10F	LEGEND - SOIL (SHEET 1 OF 2)
	A10G	LEGEND - SOIL (SHEET 2 OF 2)
	A10H	LEGEND - ROCK

STANDARD PLAN SHEET No.

DETAIL No.

QUANTITIES

STRUCTURE EXCAVATION (SOLDIER PILE WALL)	147	CY
STRUCTURE BACKFILL (SOLDIER PILE WALL)	64	CY
CONCRETE BACKFILL (SOLDIER PILE WALL)	352	CY
GROUND ANCHOR (SUBHORIZONTAL)	40	EA
STEEL SOLDIER PILE (W 14 X 90)	1,978	LF
30" DRILLED HOLE	1,927	LF
STRUCTURAL CONCRETE, BUTTRESS	65	CY
BAR REINFORCING STEEL (BUTTRESS)	7,760	LB

Jeff Sims
DESIGN ENGINEER

	BY	CHECKED			
DESIGN	Eric Watson	Glen Lawson	LOAD & RESISTANCE FACTOR DESIGN		
DETAILS	B. Jenko/ J. Zhou	Glen Lawson	LAYOUT	Eric Watson	Glen Lawson
QUANTITIES	Greg Thornton	Bob Huddleston	SPECIFICATIONS	Jennifer Ramierez	PLANS AND SPECS COMPARED Sharon Hansen

ORIGINAL SCALE IN INCHES FOR REDUCED PLANS 0 1 2 3

STATE OF CALIFORNIA
DEPARTMENT OF TRANSPORTATION

DIVISION OF ENGINEERING SERVICES
STRUCTURE DESIGN
DESIGN BRANCH 1

BRIDGE NO. 04E0035
POST MILE 111.6

ANCHORED BUTTRESS WALL NO. 11
GENERAL PLAN

UNIT: 3576
PROJECT NUMBER & PHASE: 01120001271
CONTRACT NO.: 01-0B4304

DISREGARD PRINTS BEARING EARLIER REVISION DATES

REVISION DATES 7-22-14 09/16/15 10/26/15

SHEET 1 OF 7

USERNAME => s132662 DATE PLOTTED => 26-JUL-2016 TIME PLOTTED => 09:56

STRUCTURES DESIGN GENERAL PLAN SHEET (ENGLISH) (REV.09-01-10)

FILE => wall11-a-gp01.dgn

DIST	COUNTY	ROUTE	POST MILES TOTAL PROJECT	SHEET No.	TOTAL SHEETS
01	Hum	101	111.3/111.7	61	83

Eric Watson 3-4-16
REGISTERED CIVIL ENGINEER DATE

June 20, 2016
PLANS APPROVAL DATE

REGISTERED PROFESSIONAL ENGINEER
Eric Watson
No. 64273
Exp. 6/30/17
CIVIL
STATE OF CALIFORNIA

The State of California or its officers or agents shall not be responsible for the accuracy or completeness of scanned copies of this plan sheet.

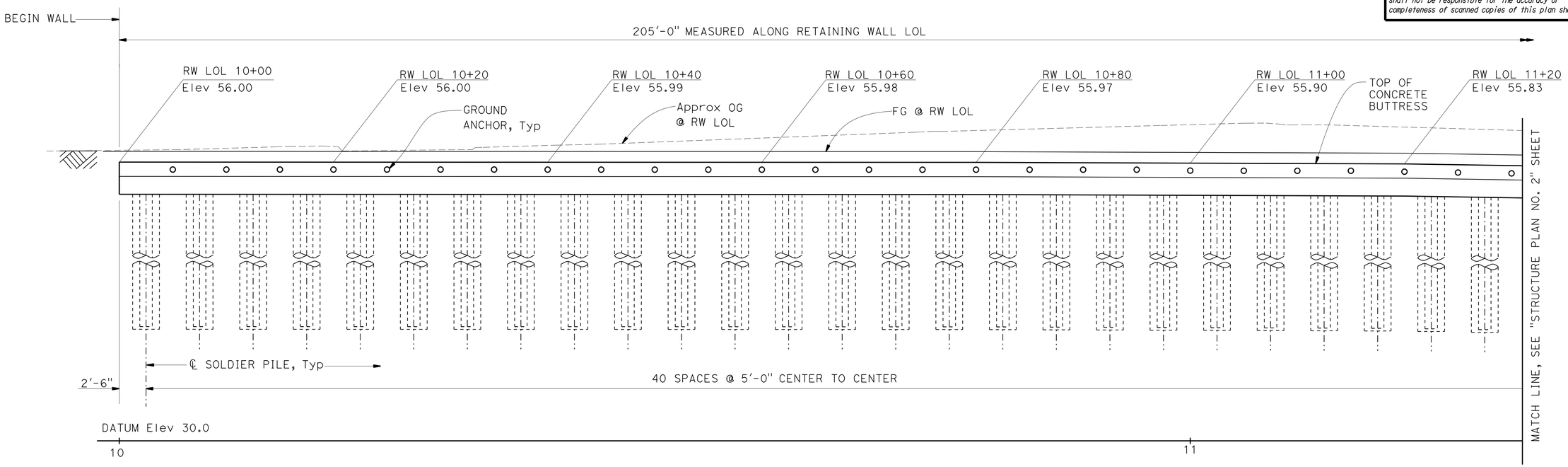

MIRRORED ELEVATION

1" = 5'

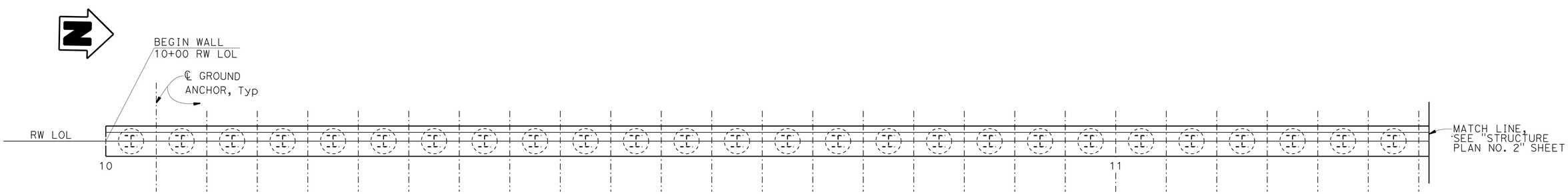

PLAN

1" = 5'

DESIGN	BY Eric Watson	CHECKED Glen Lawson	
DETAILS	BY Jin Zhou	CHECKED Glen Lawson	
QUANTITIES	BY Greg Thornton	CHECKED Bob Huddleston	

STATE OF CALIFORNIA
DEPARTMENT OF TRANSPORTATION

DIVISION OF ENGINEERING SERVICES
STRUCTURE DESIGN
DESIGN BRANCH 1

BRIDGE NO. 04E0035
POST MILE 111.6

ANCHORED BUTTRESS WALL NO. 11

STRUCTURE PLAN NO. 1

STRUCTURES DESIGN DETAIL SHEET (ENGLISH) (REV. 09-01-10)

ORIGINAL SCALE IN INCHES FOR REDUCED PLANS 0 1 2 3

UNIT: 3576
PROJECT NUMBER & PHASE: 01120001271
CONTRACT NO.: 01-0B4304

DISREGARD PRINTS BEARING EARLIER REVISION DATES

REVISION DATES: 08/19/14 02/23/15 05/02/15

SHEET 2 OF 7

FILE => wall11-b-struc01.dgn

USERNAME => s132662 DATE PLOTTED => 26-JUL-2016 TIME PLOTTED => 09:56

DIST	COUNTY	ROUTE	POST MILES TOTAL PROJECT	SHEET No.	TOTAL SHEETS
01	Hum	101	111.3/111.7	62	83

Eric Watson 3-4-16
REGISTERED CIVIL ENGINEER DATE

June 20, 2016
PLANS APPROVAL DATE

REGISTERED PROFESSIONAL ENGINEER Eric Watson No. 64273 Exp. 6/30/15 CIVIL STATE OF CALIFORNIA

The State of California or its officers or agents shall not be responsible for the accuracy or completeness of scanned copies of this plan sheet.

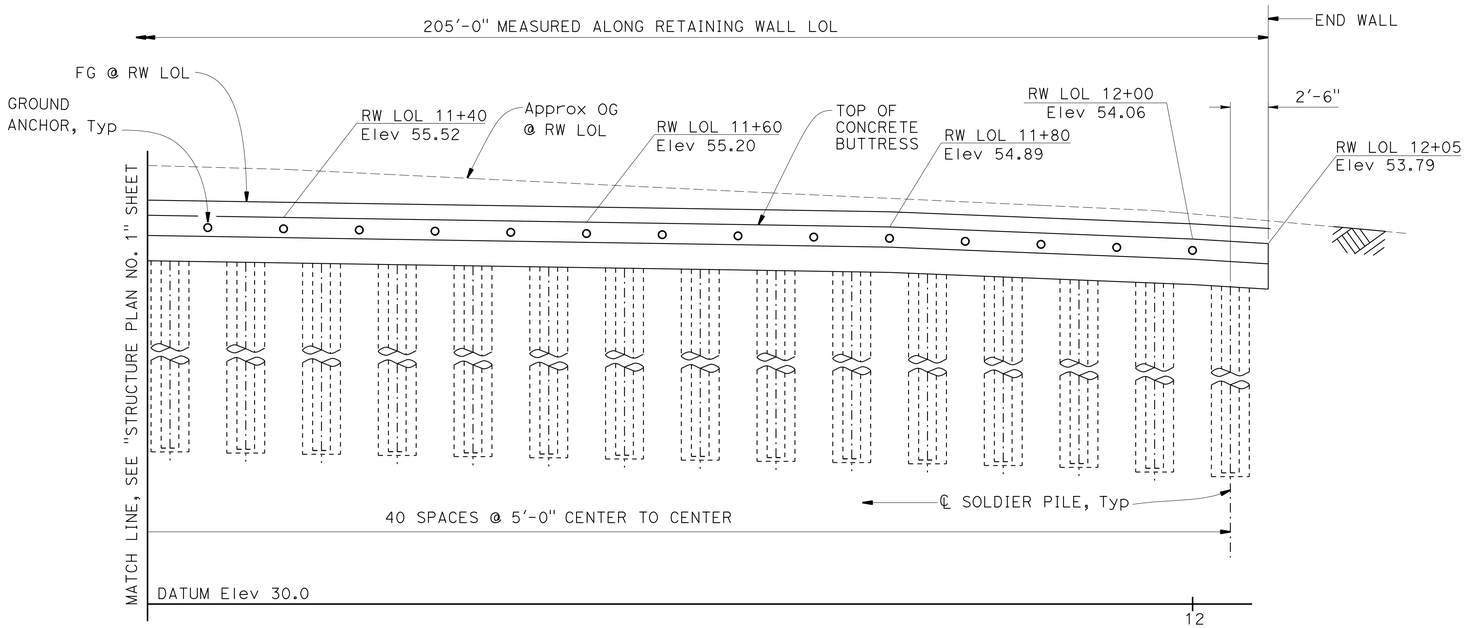

MIRRORED ELEVATION

1" = 5'

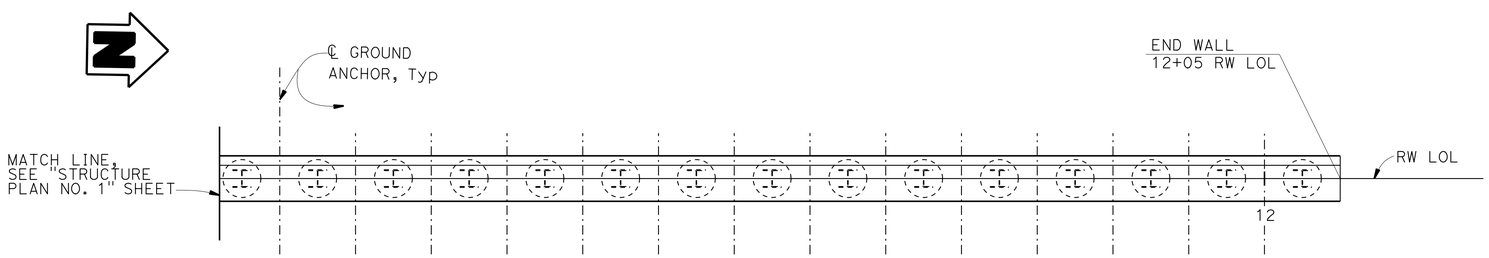

PLAN

1" = 5'

GENERAL NOTES
LOAD AND RESISTANCE FACTOR DESIGN

DESIGN:

AASHTO LRFD Bridge Design Specifications, 2012 Edition with Caltrans Amendments, preface dated January 2014.

LIVE LOAD:

2'-0" Level Earth Surcharge

SOIL PARAMETERS (For determination of Design Lateral Earth Pressures):

0'-20' from surface: $\Phi = 34°$, $\gamma = 125$ pcf

20'-50' from surface: $\Phi = 21°$, $\gamma = 125$ pcf

SEISMIC LOADING:

PGA = 0.63g

Horizontal seismic coefficient (k_h) = 0.21

Vertical seismic coefficient (k_v) = 0.0

STEEL SOLDIER PILES:

f_y = 50 ksi

REINFORCED CONCRETE:

f'_c = 3.6 ksi

f_y = 60 ksi

n = 8

PRESTRESSING STEEL (GROUND ANCHORS):

Strands - ASTM designation:A416

Bars - ASTM designation: A722 Type I

FDL = Factored Design Load 90 kips

FTL = Factored Test Load 90 kips

LL = Lock-Off Load 50 kips

f_{pu} = Minimum ultimate tensile stress of ground anchor steel (ksi)

A_s (Min) = Minimum cross sectional area of steel in Ground Anchor (in^2)

$$A_s(\text{Min}) = \frac{1.0\ \text{FTL}}{0.75\ f_{pu}}$$

DESIGN	BY Eric Watson	CHECKED Glen Lawson	
DETAILS	BY Jin Zhou	CHECKED Glen Lawson	
QUANTITIES	BY Greg Thornton	CHECKED Bob Huddleston	

STATE OF CALIFORNIA
DEPARTMENT OF TRANSPORTATION

DIVISION OF ENGINEERING SERVICES
STRUCTURE DESIGN
DESIGN BRANCH 1

BRIDGE NO. 04E0035
POST MILE 111.6

ANCHORED BUTTRESS WALL NO. 11
STRUCTURE PLAN NO. 2

STRUCTURES DESIGN DETAIL SHEET (ENGLISH) (REV. 09-01-10)

ORIGINAL SCALE IN INCHES FOR REDUCED PLANS 0 1 2 3

UNIT: 3576
PROJECT NUMBER & PHASE: 01120001271
CONTRACT NO.: 01-0B4304

DISREGARD PRINTS BEARING EARLIER REVISION DATES

REVISION DATES 08-30-14 02-27-15 05-22-15 05-29-15

SHEET 3 OF 7

FILE => wall11-b-struc02.dgn

USERNAME => s132662 DATE PLOTTED => 26-JUL-2016 TIME PLOTTED => 09:56

DIST	COUNTY	ROUTE	POST MILES TOTAL PROJECT	SHEET No.	TOTAL SHEETS
01	Hum	101	111.3/111.7	63	83

Eric Watson 3-4-16
REGISTERED CIVIL ENGINEER DATE

June 20, 2016
PLANS APPROVAL DATE

REGISTERED PROFESSIONAL ENGINEER Eric Watson No. 64273 Exp. 6/30/17 CIVIL STATE OF CALIFORNIA

The State of California or its officers or agents shall not be responsible for the accuracy or completeness of electronic copies of this plan sheet.

CURVE DATA

No. ⊛	R	Δ	T	L
2	600.00	12°23'43"	65.16	129.80
3	585.00	42°53'46"	229.82	437.98

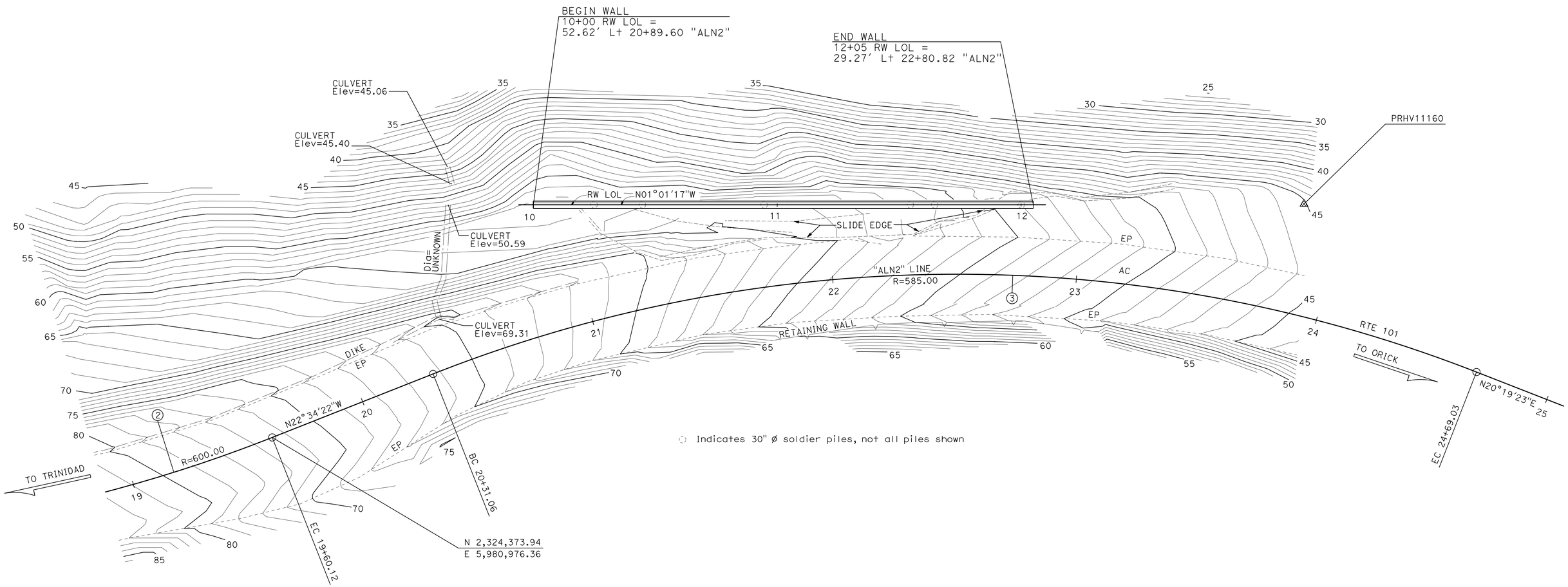

PRELIMINARY INVESTIGATION SECTION							
SCALE 1"=20'	VERT.DATUM NAVD88	PHOTOGRAMMETRY AS OF: X					
	HORZ.DATUM NAD83 (1991.35)	SURVEYED	BY DISTRICT	CHECKED	BY D. IVY	7/2014	
ALIGNMENT TIES Dist TRAVERSE SHEET		DRAFTED	BY L. YOUNG	7/2014	CHECKED	BY S. SOU	7/2014

DESIGN	BY Eric Watson	CHECKED Glen Lawson
DETAILS	BY Jin Zhou	CHECKED Glen Lawson
QUANTITIES	BY Greg Thornton	CHECKED Bob Huddleston

STATE OF CALIFORNIA
DEPARTMENT OF TRANSPORTATION

DIVISION OF ENGINEERING SERVICES
STRUCTURE DESIGN
DESIGN BRANCH 1

BRIDGE NO. 04E0035
POST MILE 111.6

ANCHORED BUTTRESS WALL NO. 11
FOUNDATION PLAN

STRUCTURES FOUNDATION PLAN SHEET (ENGLISH) (REV. 09-01-10)

ORIGINAL SCALE IN INCHES FOR REDUCED PLANS 0 1 2 3

UNIT: 3576
PROJECT NUMBER & PHASE: 01120001271
CONTRACT NO.: 01-0B4304

DISREGARD PRINTS BEARING EARLIER REVISION DATES

REVISION DATES 08-29-14 02-24-15 05-22-15 09/15/15

SHEET 4 OF 7

FILE => wall11-e-fp.dgn

USERNAME => s132662 DATE PLOTTED => 26-JUL-2016 TIME PLOTTED => 09:56

DIST	COUNTY	ROUTE	POST MILES TOTAL PROJECT	SHEET No.	TOTAL SHEETS
01	Hum	101	111.3/111.7	64	83

Eric Watson 3-4-16
REGISTERED CIVIL ENGINEER DATE

June 20, 2016
PLANS APPROVAL DATE

REGISTERED PROFESSIONAL ENGINEER Eric Watson No. 64273 Exp. 6/30/15 CIVIL STATE OF CALIFORNIA

The State of California or its officers or agents shall not be responsible for the accuracy or completeness of scanned copies of this plan sheet.

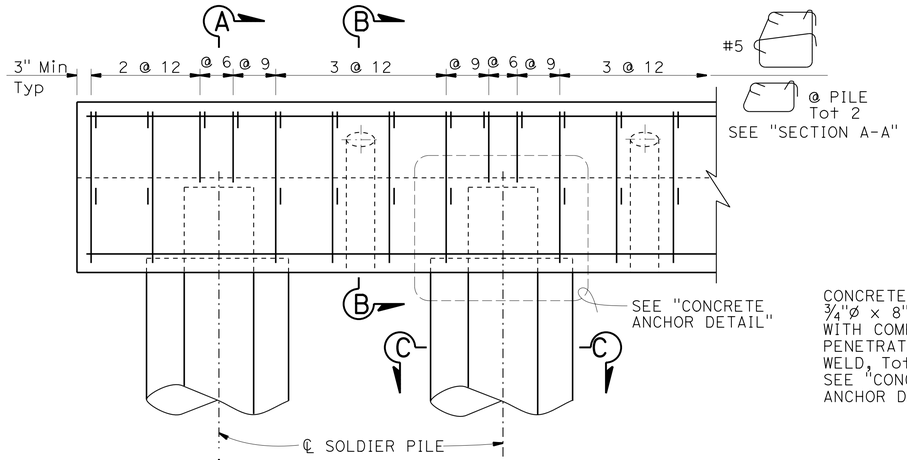

PART ELEVATION
3/4" = 1'-0"

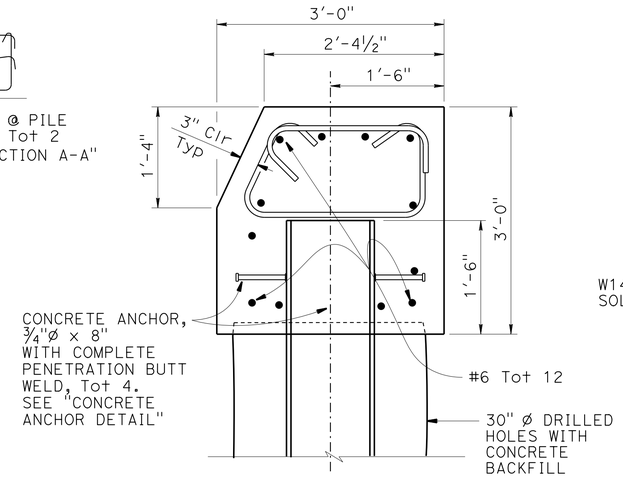

SECTION A-A
1" = 1'-0"

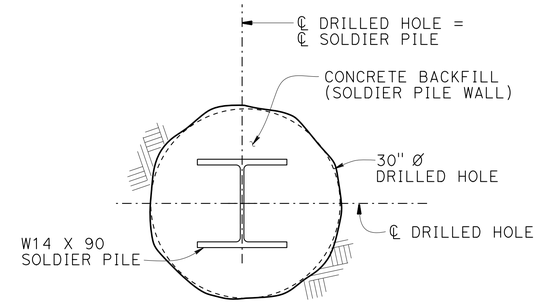

SECTION C-C
3" = 1'-0"

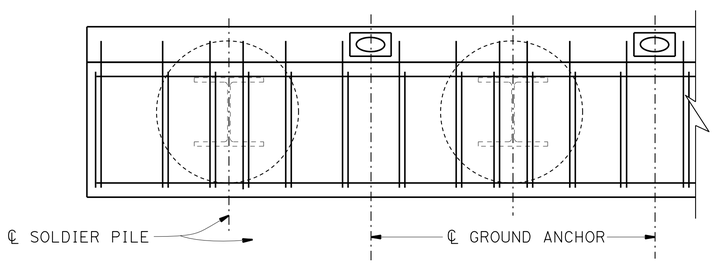

PLAN
3/4" = 1'-0"

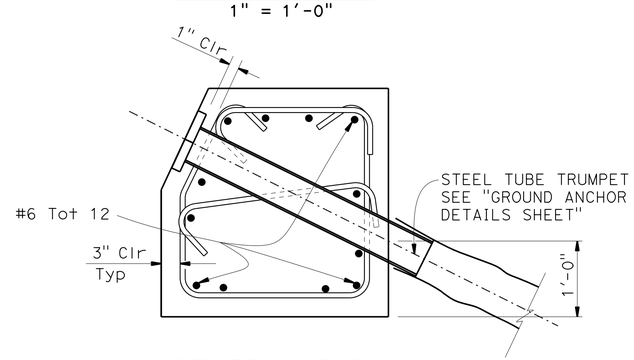

SECTION B-B
1" = 1'-0"

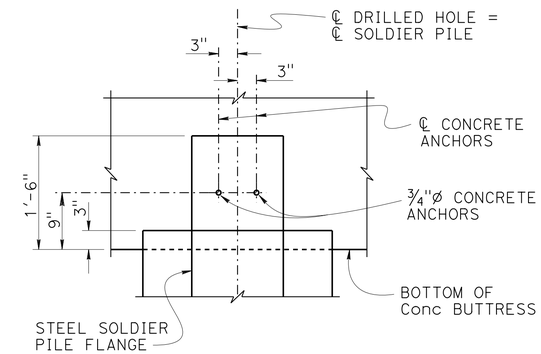

CONCRETE ANCHOR DETAIL
1" = 1'-0"

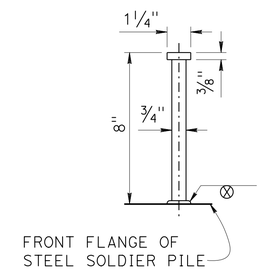

CONCRETE ANCHOR
3" = 1'-0"

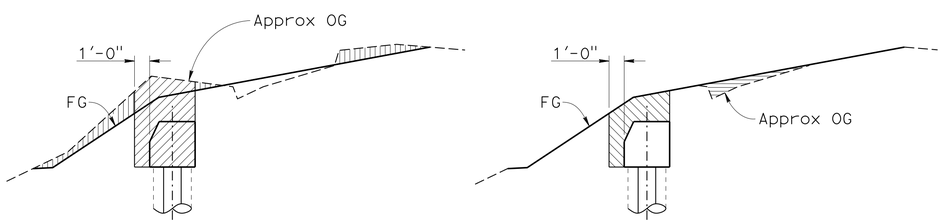

EXCAVATION BACKFILL

LEGEND:

- Indicates Structure Excavation (Soldier Pile Wall)
- Indicates Structure Backfill (Soldier Pile Wall)
- Indicates Roadway Excavation, See "ROADWAY PLANS"
- Indicates Roadway Embankment, See "ROADWAY PLANS"

LIMITS OF PAYMENT FOR EXCAVATION AND BACKFILL
NO SCALE

CONSTRUCTION SEQUENCE:

1. Excavate to bottom of Concrete Buttress and build temporary Working Bench where required.
2. Excavate back side of Concrete Buttress at 1:1 slope, or flatter, from top corner of Buttress to Original Grade. Concrete Buttress must be placed against undisturbed material.
3. Install Ground Anchors, see "Ground Anchor Details" sheet.
4. Construct Concrete Buttress.
5. Test Ground Anchors and lock off.
6. Backfill to Finish Grade.

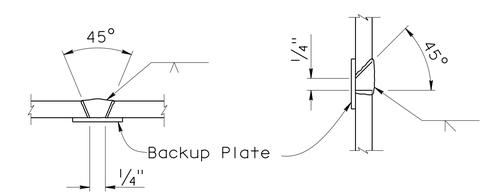

SINGLE VEE-GROOVE SINGLE BEVEL-GROOVE

PILE WELDING DETAIL-BUTT JOINTS
NO SCALE

NOTES:

a. Single Vee-Groove permitted for all position

b. Single Bevel-Groove permitted for horizontal joints only

DESIGN	BY Eric Watson	CHECKED Glen Lawson	
DETAILS	BY Jin Zhou	CHECKED Glen Lawson	
QUANTITIES	BY Greg Thornton	CHECKED Bob Huddleston	

STATE OF CALIFORNIA DEPARTMENT OF TRANSPORTATION

DIVISION OF ENGINEERING SERVICES STRUCTURE DESIGN DESIGN BRANCH 1

BRIDGE NO. 04E0035 POST MILE 111.6

ANCHORED BUTTRESS WALL NO. 11
BUTTRESS DETAILS

STRUCTURES DESIGN DETAIL SHEET (ENGLISH) (REV. 09-01-10)

ORIGINAL SCALE IN INCHES FOR REDUCED PLANS 0 1 2 3

UNIT: 3576
PROJECT NUMBER & PHASE: 01120001271 CONTRACT NO.: 01-0B4304

DISREGARD PRINTS BEARING EARLIER REVISION DATES

REVISION DATES 09-02-14 07-24-15 05-23-15 06-22-15 SHEET 5 OF 7

FILE => wall11-f-det01.dgn

USERNAME => s132662 DATE PLOTTED => 26-JUL-2016 TIME PLOTTED => 09:56

DIST	COUNTY	ROUTE	POST MILES TOTAL PROJECT	SHEET No.	TOTAL SHEETS
01	Hum	101	111.3/111.7	65	83

Eric Watson 3-4-16
REGISTERED CIVIL ENGINEER DATE

June 20, 2016
PLANS APPROVAL DATE

REGISTERED PROFESSIONAL ENGINEER Eric Watson No. 64273 Exp. 6/30/17 CIVIL STATE OF CALIFORNIA

The State of California or its officers or agents shall not be responsible for the accuracy or completeness of scanned copies of this plan sheet.

NOTES:

(A) Level of initial grouting for drilled hole 6" in diameter or smaller

(B) Level of secondary grouting

(C) Level of initial grouting inside corrugated sheathing

(D) Face of wall excavation

NOTES:

1. Anchorage enclosure shall only be used when anchor head assembly is not enclosed in concrete.
2. Anchorage enclosure shall have provisions to allow injecting grout at low end and venting at high end. Galvanize after fabrication.
3. Silicone sealant to cover full width of flange.
4. Steel tube (Min thickness = 1/4") welded to bearing plate. Galvanize assembly after fabrication
5. Steel tube welded to bearing plate. Inside diameter of steel tube (Min thickness = 1/4") to be 1" greater than outside diameter of smooth sheathing. Galvanize assembly after fabrication.

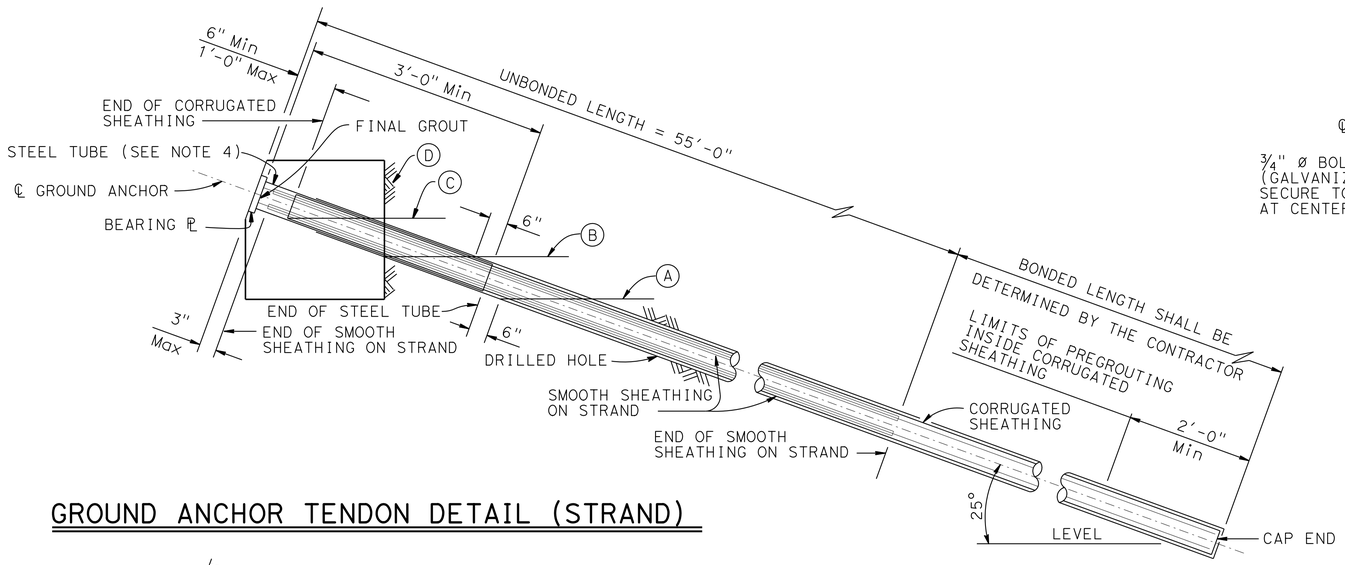

GROUND ANCHOR TENDON DETAIL (STRAND)

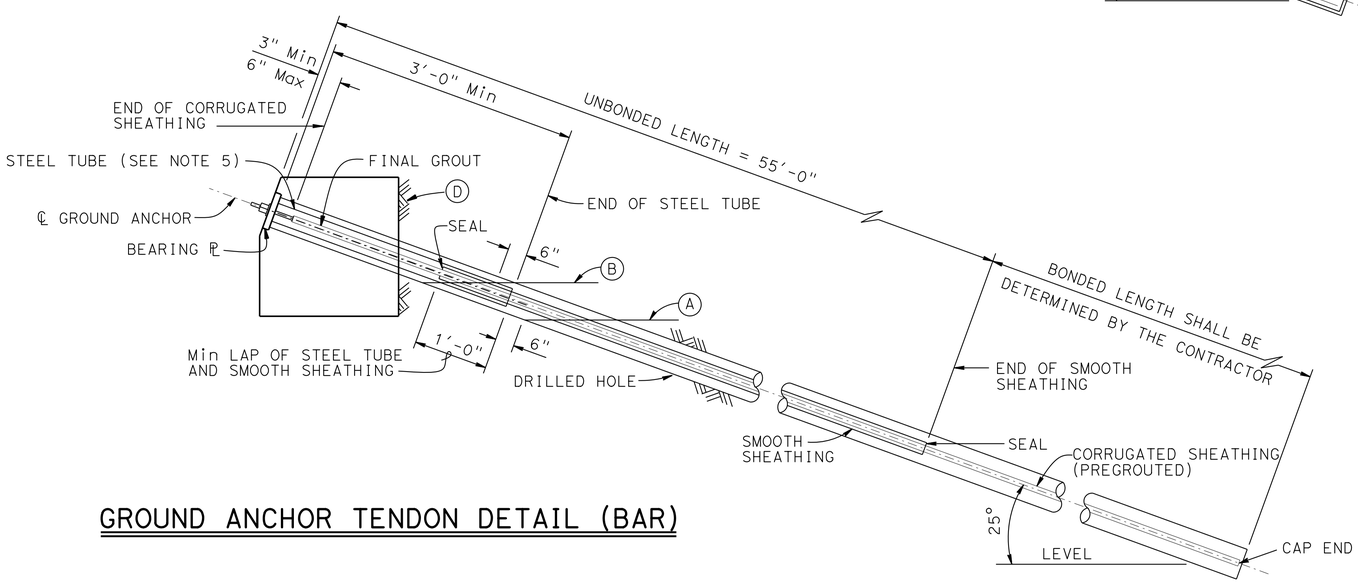

GROUND ANCHOR TENDON DETAIL (BAR)

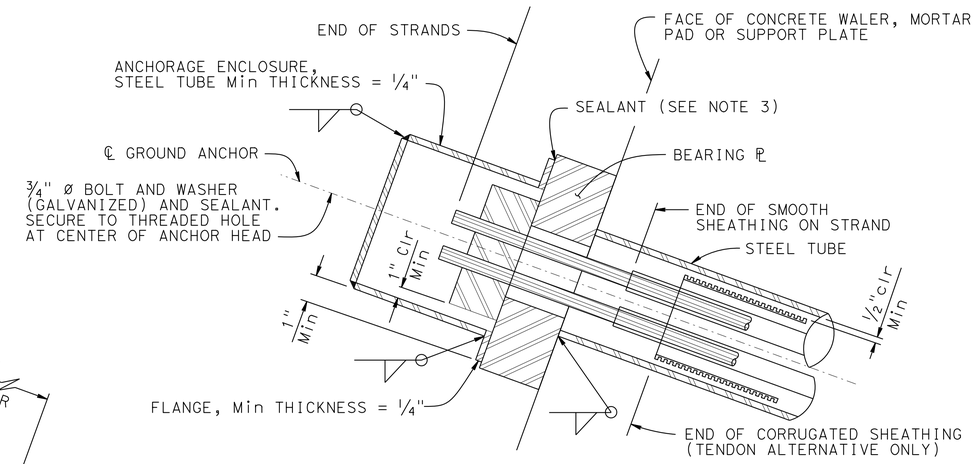

ALTERNATIVE X

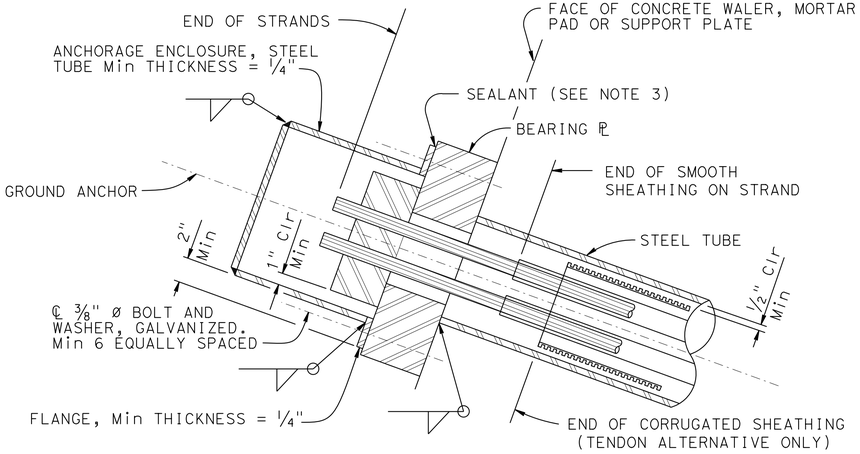

ALTERNATIVE Y

ANCHORAGE ENCLOSURE DETAILS

NO SCALE

DESIGN	BY Eric Watson	CHECKED Glen Lawson	
DETAILS	BY Jin Zhou	CHECKED Glen Lawson	
QUANTITIES	BY Greg Thornton	CHECKED Bob Huddleston	

STATE OF CALIFORNIA
DEPARTMENT OF TRANSPORTATION

DIVISION OF ENGINEERING SERVICES
STRUCTURE DESIGN
DESIGN BRANCH 1

BRIDGE NO. 04E0035
POST MILE 111.6

ANCHORED BUTTRESS WALL NO. 11
GROUND ANCHOR DETAILS

STRUCTURES DESIGN DETAIL SHEET (ENGLISH) (REV. 09-01-10)

ORIGINAL SCALE IN INCHES FOR REDUCED PLANS 0 1 2 3

UNIT: 3576
PROJECT NUMBER & PHASE: 01120001271
CONTRACT NO.: 01-0B4304

DISREGARD PRINTS BEARING EARLIER REVISION DATES

REVISION DATES: 08/25/14 02/24/15

SHEET 6 OF 7

FILE => wal11-grou-det_xs12-040.dgn

USERNAME => s132662 DATE PLOTTED => 26-JUL-2016 TIME PLOTTED => 09:57

DIST	COUNTY	ROUTE	POST MILES TOTAL PROJECT	SHEET No.	TOTAL SHEETS
01	Hum	101	111.3/111.7	66	83

REGISTERED CIVIL ENGINEER 5-18-15 DATE

June 20, 2016
PLANS APPROVAL DATE

REGISTERED PROFESSIONAL ENGINEER Kathy Gallagher No. C62012 Exp. 9-30-15 CIVIL STATE OF CALIFORNIA

The State of California or its officers or agents shall not be responsible for the accuracy or completeness of electronic copies of this plan sheet.

This LOTB sheet was prepared in accordance with the Caltrans Soil & Rock Logging, Classification, & Presentation Manual (2010 Edition).

See 2010 Standard Plans A10F and A10G for Soil Legend, and A10H for Rock Legend.

BENCH MARK

PRHV 11160 Elev 44.250
Found AC Cap on rebar
N 2324795.230
E 5980873.090
NAVD 88

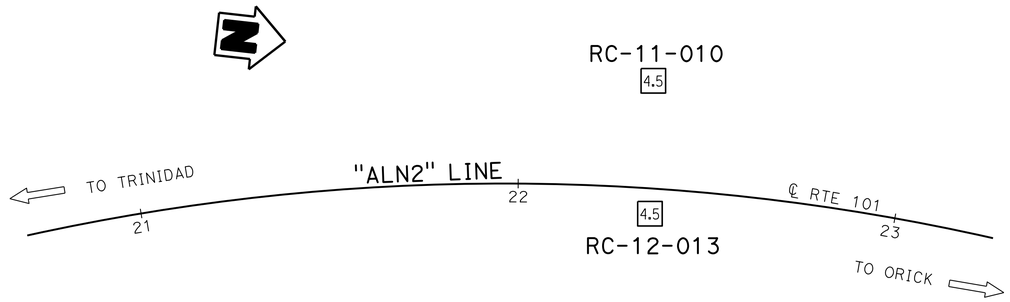

PLAN

1" = 20'

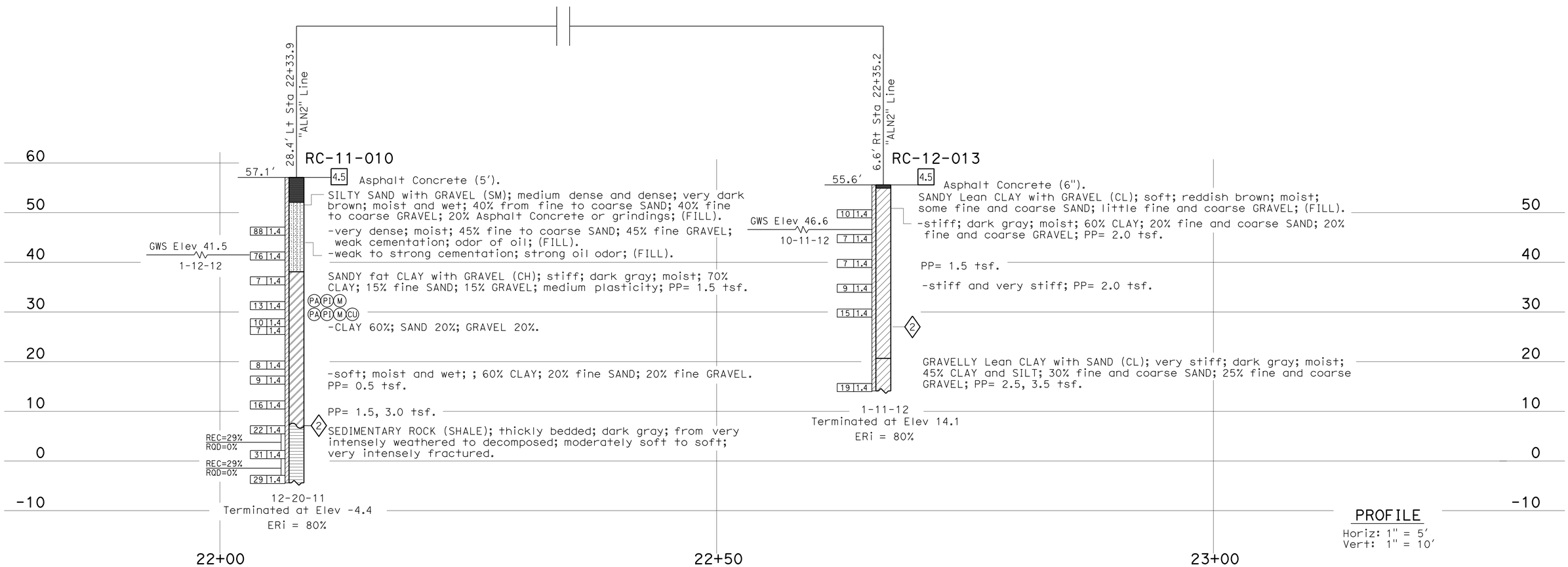

PROFILE

Horiz: 1" = 5'
Vert: 1" = 10'

ENGINEERING SERVICES	MATERIALS AND GEOTECHNICAL SERVICES	STATE OF CALIFORNIA DEPARTMENT OF TRANSPORTATION	DIVISION OF ENGINEERING SERVICES STRUCTURE DESIGN DESIGN BRANCH 1	BRIDGE NO. 04E0035 POST MILE 111.6	ANCHORED BUTTRESS WALL NO. 11 LOG OF TEST BORINGS
FUNCTIONAL SUPERVISOR NAME: C. Narwold	DRAWN BY: I. G-Remmen CHECKED BY: R. Newman	FIELD INVESTIGATION BY: K. Gallagher			

OGS CIVIL LOG OF TEST BORINGS SHEET

ORIGINAL SCALE IN INCHES FOR REDUCED PLANS 0 1 2 3

UNIT: 3650
PROJECT NUMBER & PHASE: 01120001271 CONTRACT NO.: 01-0B4304

DISREGARD PRINTS BEARING EARLIER REVISION DATES

REVISION DATES: 05-08-15 05-18-15

SHEET 7 OF 7

FILE => wal11-z-lotb.dgn

USERNAME => s132662 DATE PLOTTED => 26-JUL-2016 TIME PLOTTED => 09:57

DIST	COUNTY	ROUTE	POST MILES TOTAL PROJECT	SHEET No.	TOTAL SHEETS
01	Hum	101	111.3/111.7	67	83

Eric Watson 3-4-16
REGISTERED CIVIL ENGINEER DATE

June 20, 2016
PLANS APPROVAL DATE

REGISTERED PROFESSIONAL ENGINEER
Eric Watson
No. 64273
Exp. 6/30/17
CIVIL
STATE OF CALIFORNIA

The State of California or its officers or agents shall not be responsible for the accuracy or completeness of scanned copies of this plan sheet.

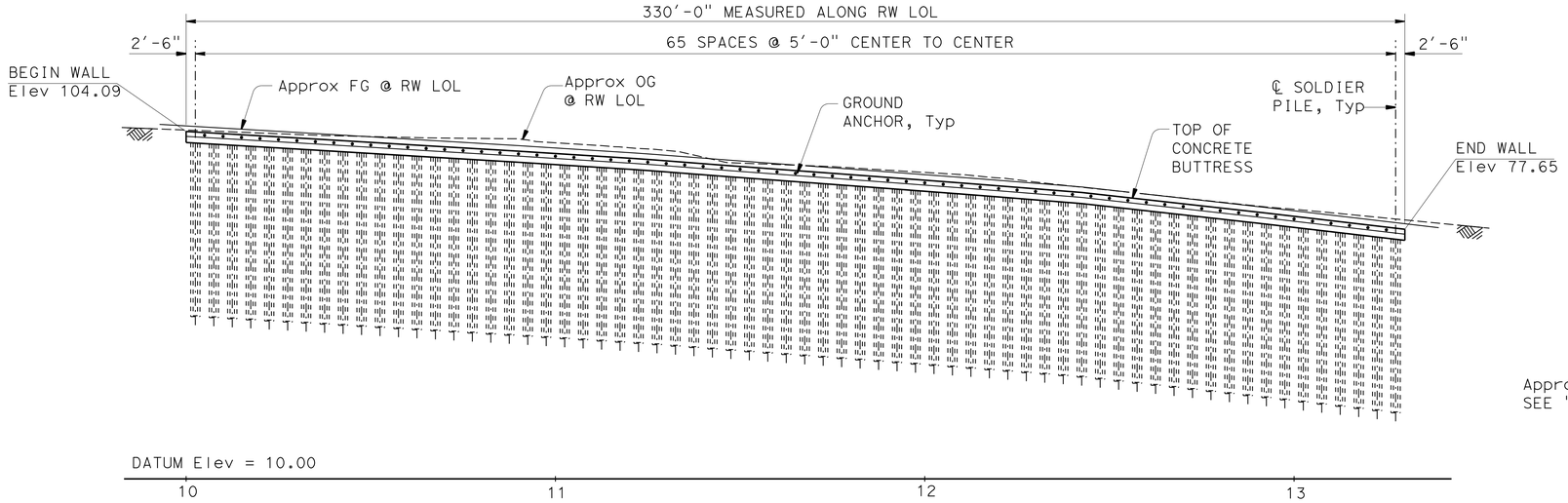

DEVELOPED MIRRORED ELEVATION

1" = 20'

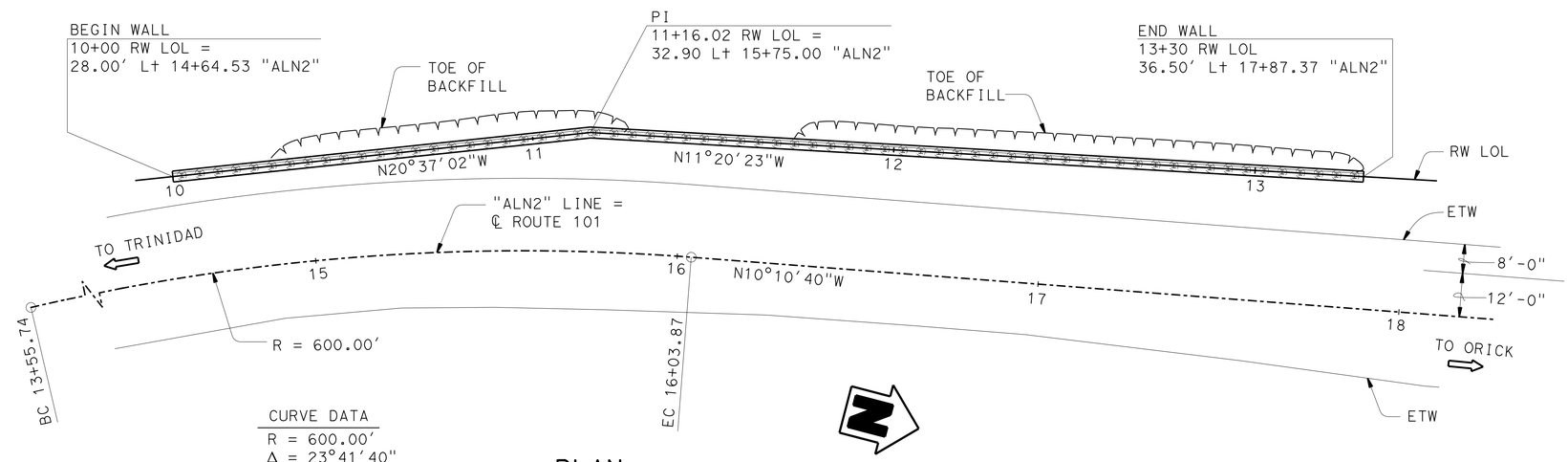

CURVE DATA
R = 600.00'
Δ = 23°41'40"
T = 125.86'
L = 248.13'

PLAN

1" = 20'

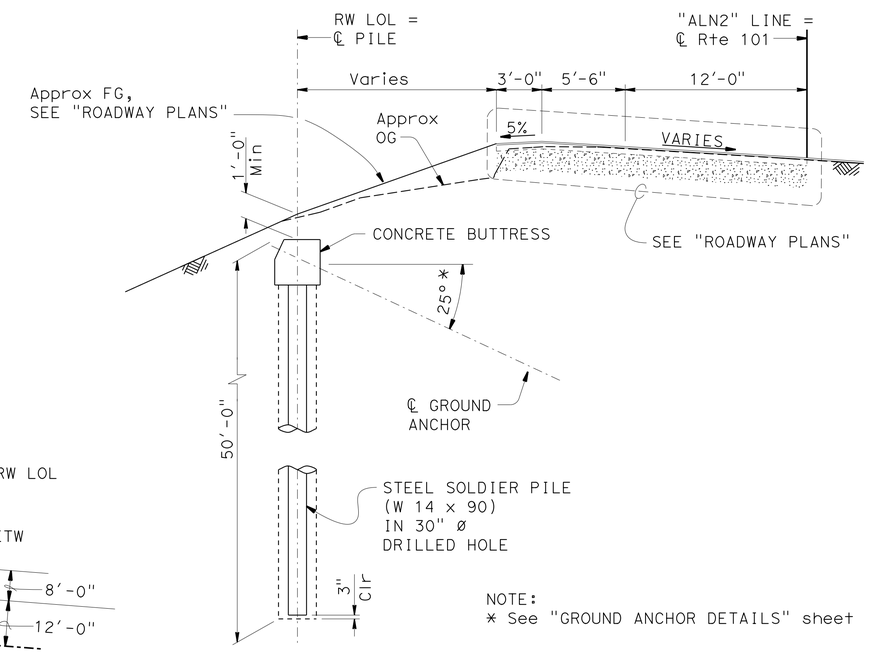

NOTE:
* See "GROUND ANCHOR DETAILS" sheet

TYPICAL SECTION

1" = 5'

INDEX TO PLANS

SHEET NO.	TITLE
1.	GENERAL PLAN
2.	STRUCTURE PLAN NO. 1
3.	STRUCTURE PLAN NO. 2
4.	FOUNDATION PLAN
5.	BUTTRESS DETAILS
6.	GROUND ANCHOR DETAILS
7.	LOG OF TEST BORINGS

STANDARD PLANS DATED 2010

	A10A	ABBREVIATIONS (SHEET 1 OF 2)
RSP	A10B	ABBREVIATIONS (SHEET 2 OF 2)
	A10C	LINES AND SYMBOLS (SHEET 1 OF 3)
	A10D	LINES AND SYMBOLS (SHEET 2 OF 3)
	A10E	LINES AND SYMBOLS (SHEET 3 OF 3)
	A10F	LEGEND - SOIL (SHEET 1 OF 2)
	A10G	LEGEND - SOIL (SHEET 2 OF 2)
	A10H	LEGEND - ROCK

STANDARD PLAN SHEET No.

DETAIL No.

QUANTITIES

STRUCTURE EXCAVATION (SOLDIER PILE WALL)	263	CY
STRUCTURE BACKFILL (SOLDIER PILE WALL)	135	CY
CONCRETE BACKFILL (SOLDIER PILE WALL)	546	CY
GROUND ANCHOR (SUBHORIZONTAL)	65	EA
STEEL SOLDIER PILE (W 14 X 90)	3,185	LF
30" DRILLED HOLE	3,102	LF
STRUCTURAL CONCRETE, BUTTRESS	104	CY
BAR REINFORCING STEEL (BUTTRESS)	12,820	LB

Jeff Sims
DESIGN ENGINEER

	BY	CHECKED		BY	CHECKED
DESIGN	Eric Watson	Daniel Sessions	LOAD & RESISTANCE FACTOR DESIGN		
DETAILS	Bob Huddleston	Daniel Sessions	LAYOUT	Eric Watson	Daniel Sessions
QUANTITIES	Greg Thornton	Jie Tang	SPECIFICATIONS	Jennifer Ramierez	PLANS AND SPECS COMPARED Sharon Hansen

ORIGINAL SCALE IN INCHES FOR REDUCED PLANS 0 1 2 3

STATE OF CALIFORNIA
DEPARTMENT OF TRANSPORTATION

DIVISION OF ENGINEERING SERVICES
STRUCTURE DESIGN
DESIGN BRANCH 1

BRIDGE NO. 04E0036
POST MILE 111.46

ANCHORED BUTTRESS WALL NO. 12
GENERAL PLAN

UNIT: 3576
PROJECT NUMBER & PHASE: 01120001271
CONTRACT NO.: 01-0B4304

DISREGARD PRINTS BEARING EARLIER REVISION DATES

REVISION DATES 08-05-14 10/26/15 09/15/15

SHEET 1 OF 7

USERNAME => s132662 DATE PLOTTED => 26-JUL-2016 TIME PLOTTED => 09:57

STRUCTURES DESIGN GENERAL PLAN SHEET (ENGLISH) (REV.09-01-10)

FILE => wall12-a-gp01.dgn

DIST	COUNTY	ROUTE	POST MILES TOTAL PROJECT	SHEET No.	TOTAL SHEETS
01	Hum	101	111.3/111.7	68	83

Eric Watson 3-4-16
REGISTERED CIVIL ENGINEER DATE

June 20, 2016
PLANS APPROVAL DATE

REGISTERED PROFESSIONAL ENGINEER
Eric Watson
No. 64273
Exp. 6/30/17
CIVIL
STATE OF CALIFORNIA

The State of California or its officers or agents shall not be responsible for the accuracy or completeness of scanned copies of this plan sheet.

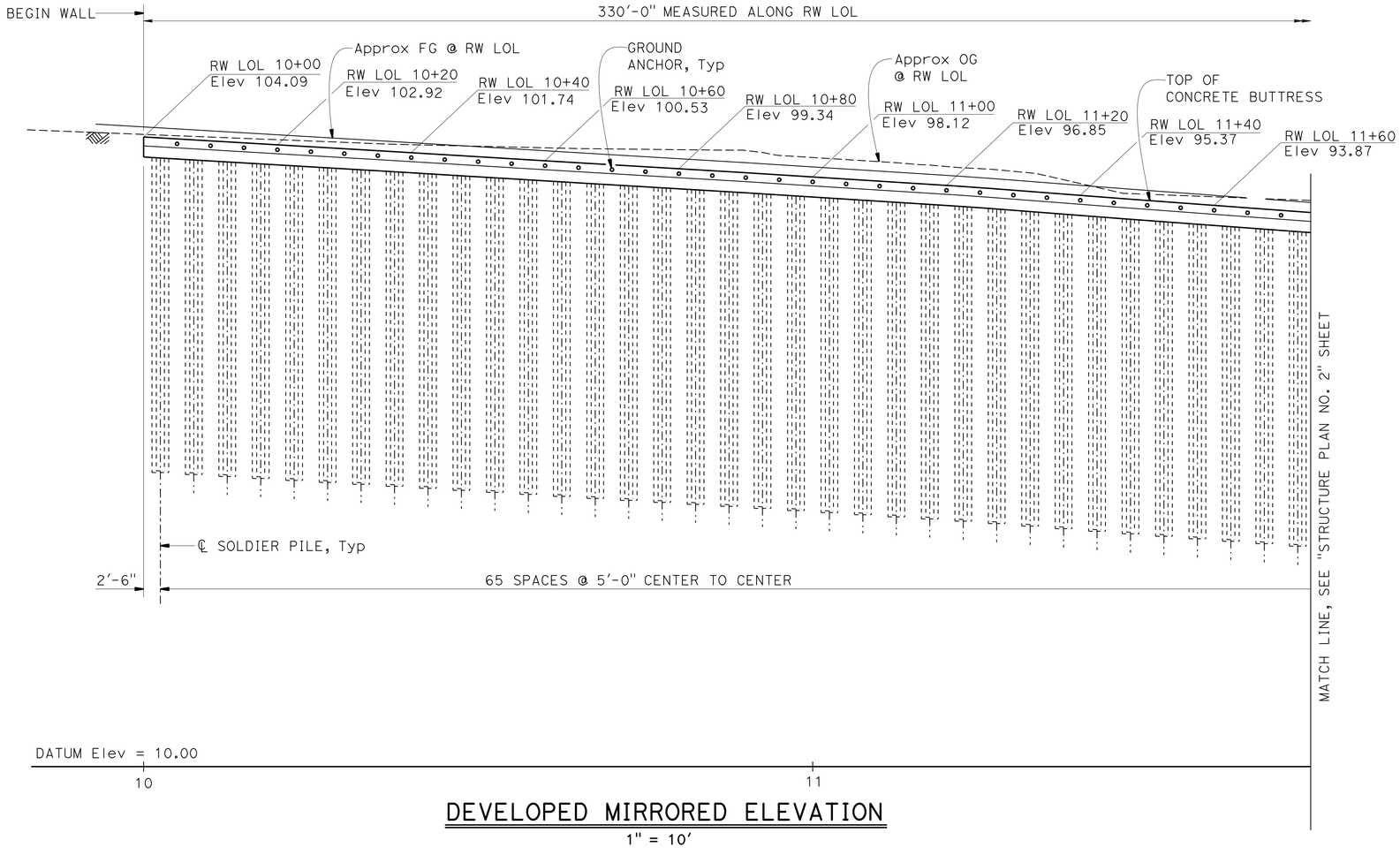

DEVELOPED MIRRORED ELEVATION

1" = 10'

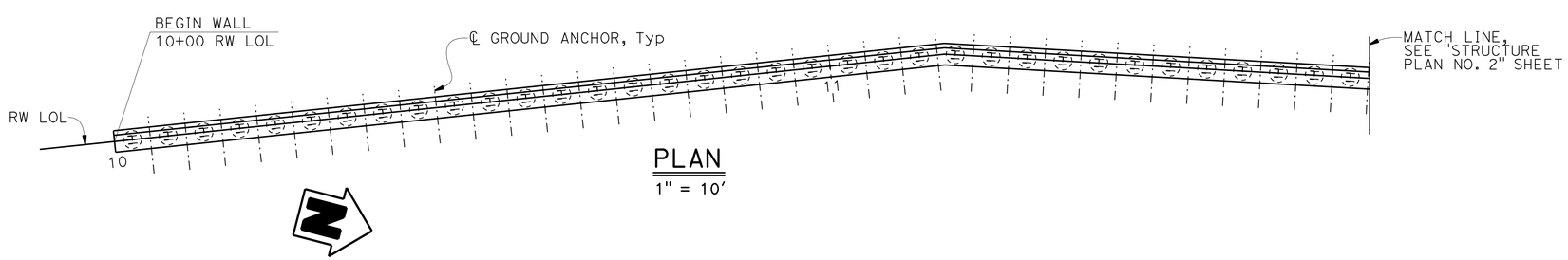

PLAN

1" = 10'

DESIGN	BY Eric Watson	CHECKED Daniel Sessions	
DETAILS	BY Jin Zhou	CHECKED Daniel Sessions	
QUANTITIES	BY Greg Thornton	CHECKED Jie Tang	

STATE OF CALIFORNIA
DEPARTMENT OF TRANSPORTATION

DIVISION OF ENGINEERING SERVICES
STRUCTURE DESIGN
DESIGN BRANCH 1

BRIDGE NO. 04E0036
POST MILE 111.46

ANCHORED BUTTRESS WALL NO. 12
STRUCTURE PLAN NO. 1

STRUCTURES DESIGN DETAIL SHEET (ENGLISH) (REV. 09-01-10)

ORIGINAL SCALE IN INCHES FOR REDUCED PLANS 0 1 2 3

UNIT: 3576
PROJECT NUMBER & PHASE: 01120001271
CONTRACT NO.: 01-0B4304

DISREGARD PRINTS BEARING EARLIER REVISION DATES

REVISION DATES: 08-26-14 02-26-15 05-01-15

SHEET 2 OF 7

FILE => wall12-b-struc01.dgn

USERNAME => s132662 DATE PLOTTED => 26-JUL-2016 TIME PLOTTED => 09:57

DIST	COUNTY	ROUTE	POST MILES TOTAL PROJECT	SHEET No.	TOTAL SHEETS
01	Hum	101	111.3/111.7	69	83

Eric Watson 3-4-16
REGISTERED CIVIL ENGINEER DATE

June 20, 2016
PLANS APPROVAL DATE

REGISTERED PROFESSIONAL ENGINEER Eric Watson No. 64273 Exp. 6/30/15 CIVIL STATE OF CALIFORNIA

The State of California or its officers or agents shall not be responsible for the accuracy or completeness of scanned copies of this plan sheet.

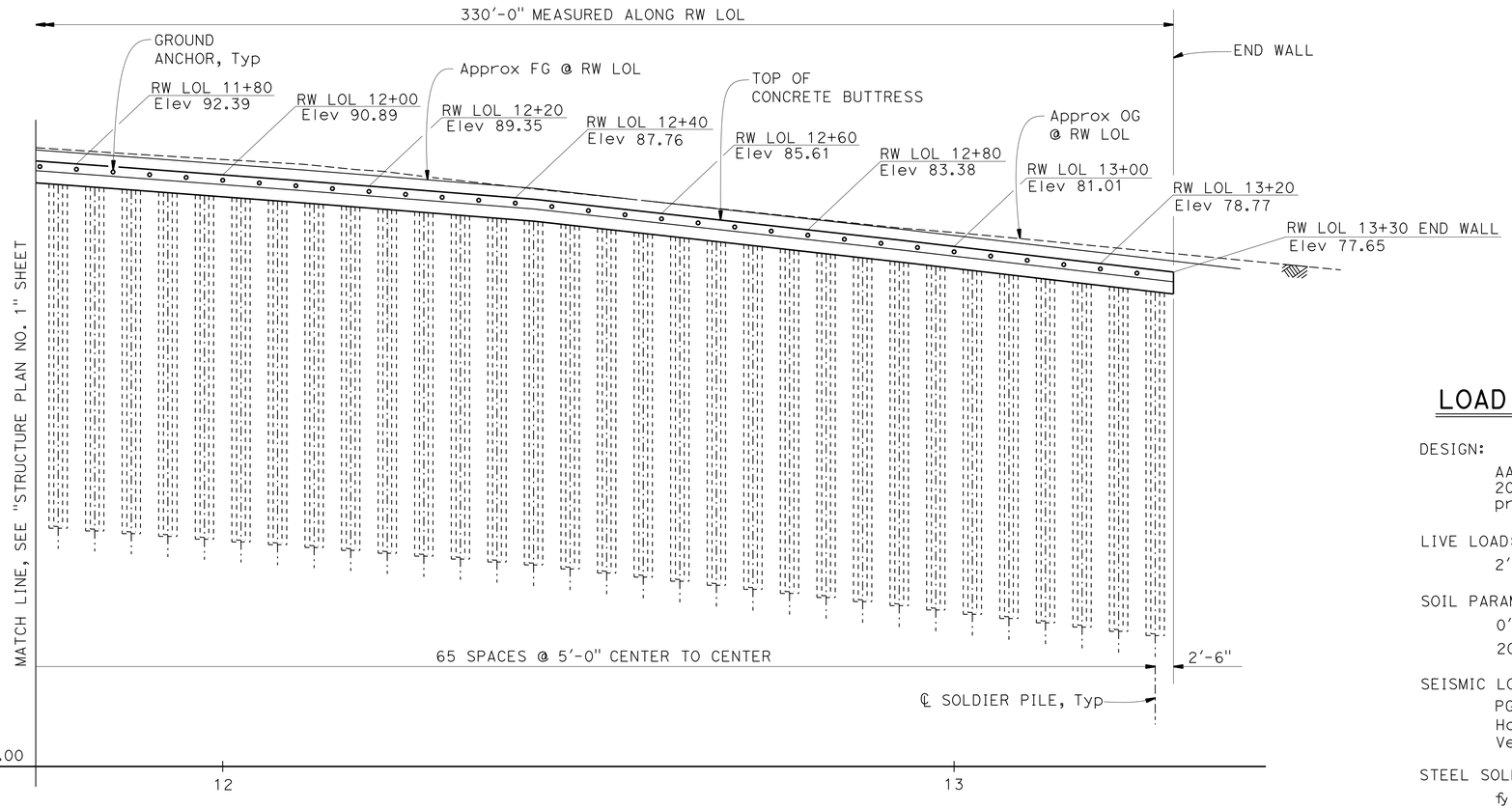

DEVELOPED MIRRORED ELEVATION

1" = 10'

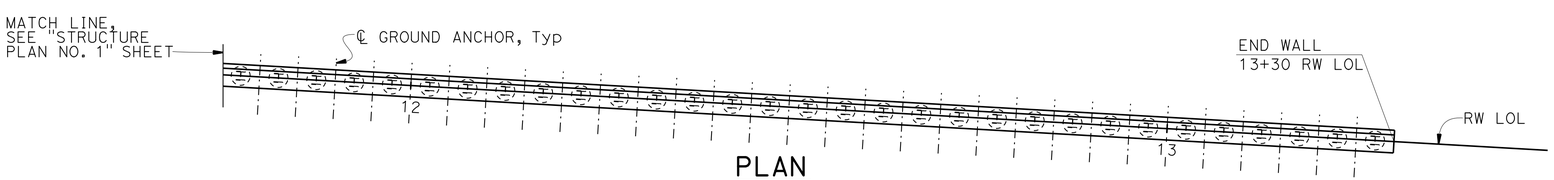

PLAN

1" = 10'

GENERAL NOTES
LOAD AND RESISTANCE FACTOR DESIGN

DESIGN:

AASHTO LRFD Bridge Design Specifications, 2012 Edition with Caltras Amendments, preface dated January 2014.

LIVE LOAD:

2'-0" Level Earth Surcharge

SOIL PARAMETERS (For determination of Design Lateral Earth Pressures):

0'-20' from surface: $\Phi = 34°$, $\gamma = 125$ pcf

20'-50' from surface: $\Phi = 21°$, $\gamma = 125$ pcf

SEISMIC LOADING:

PGA = 0.63g
Horizontal seismic coefficient (k_h) = 0.21
Vertical seismic coefficient (k_v) = 0.0

STEEL SOLDIER PILES:

f_y = 50 ksi

REINFORCED CONCRETE:

f_c' = 3.6 ksi
f_y = 60 ksi
n = 8

PRESTRESSING STEEL (GROUND ANCHORS):

Strands - ASTM designation:A416

Bars - ASTM designation: A722 Type I

FDL = Factored Design Load 90 kips

FTL = Factored Test Load 90 kips

LL = Lock-Off Load 50 kips

f_{pu} = Minimum ultimate tensile stress of ground anchor steel (ksi)

A_s (Min) = Minimum cross sectional area of steel in Ground Anchor (in^2)

$$A_s\,(Min) = \frac{1.0\ FTL}{0.75\ f_{pu}}$$

DESIGN	BY Eric Watson	CHECKED Daniel Sessions	
DETAILS	BY Jin Zhou	CHECKED Daniel Sessions	
QUANTITIES	BY Greg Thornton	CHECKED Jie Tang	

STATE OF CALIFORNIA
DEPARTMENT OF TRANSPORTATION

DIVISION OF ENGINEERING SERVICES
STRUCTURE DESIGN
DESIGN BRANCH 1

BRIDGE NO. 04E0036
POST MILE 111.46

ANCHORED BUTTRESS WALL NO. 12
STRUCTURE PLAN NO. 2

STRUCTURES DESIGN DETAIL SHEET (ENGLISH) (REV. 09-01-10)

ORIGINAL SCALE IN INCHES FOR REDUCED PLANS 0 1 2 3

UNIT: 3576
PROJECT NUMBER & PHASE: 01120001271
CONTRACT NO.: 01-0B4304

DISREGARD PRINTS BEARING EARLIER REVISION DATES

REVISION DATES 08-26-14 02-26-15 05-04-15 05-29-15

SHEET 3 OF 7

FILE => wall12-b-struc02.dgn

USERNAME => s132862 DATE PLOTTED => 26-JUL-2016 TIME PLOTTED => 09:57

DIST	COUNTY	ROUTE	POST MILES TOTAL PROJECT	SHEET No.	TOTAL SHEETS
01	Hum	101	111.3/111.7	70	83

Eric Watson 3-4-16
REGISTERED CIVIL ENGINEER DATE

June 20, 2016
PLANS APPROVAL DATE

REGISTERED PROFESSIONAL ENGINEER
Eric Watson
No. 64273
Exp. 6/30/17
CIVIL
STATE OF CALIFORNIA

The State of California or its officers or agents shall not be responsible for the accuracy or completeness of electronic copies of this plan sheet.

CURVE DATA

No. ⓡ	R	Δ	T	L
1	600.00	23°41'40"	125.86	248.13
2	600.00	12°23'43"	65.16	129.80

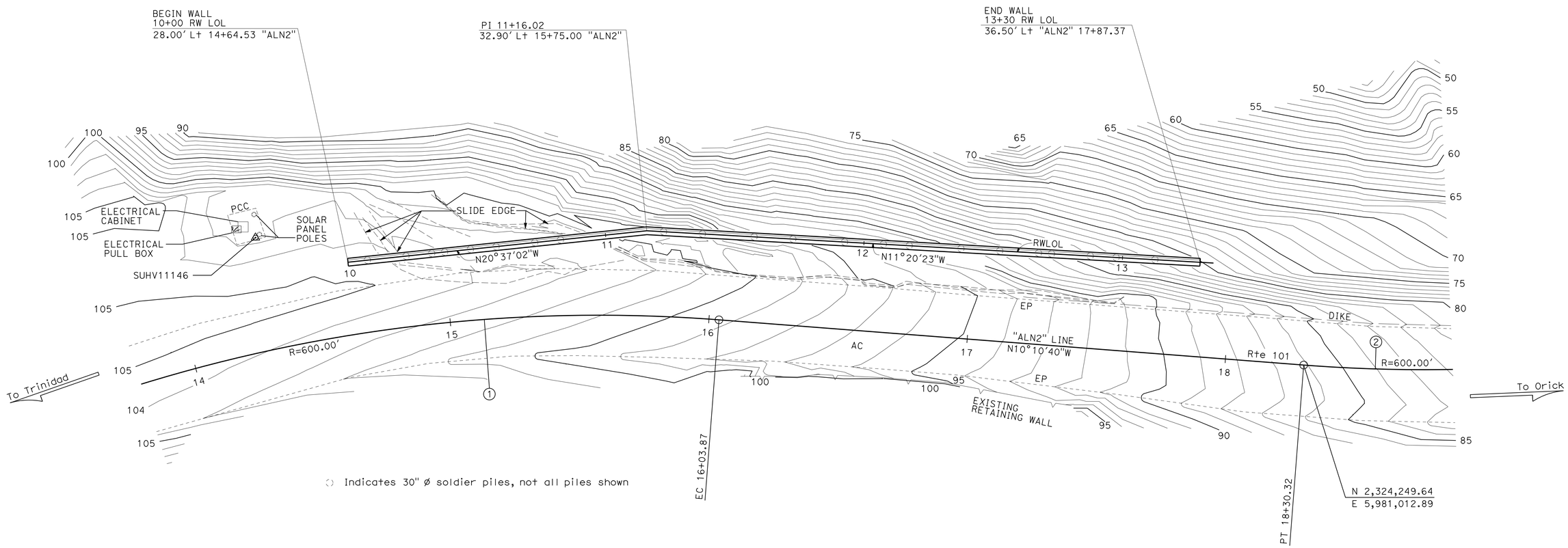

◯ Indicates 30" Ø soldier piles, not all piles shown

PRELIMINARY INVESTIGATION SECTION							
SCALE 1"=20'	VERT.DATUM NAVD88	PHOTOGRAMMETRY AS OF: X					
	HORZ.DATUM NAD83 (1991.35)	SURVEYED	BY DISTRICT		CHECKED	BY D. IVY	7/2014
ALIGNMENT TIES Dist. Traverse Sheet		DRAFTED	BY L. YOUNG	7/2014	CHECKED	BY S. SOU	7/2014

DESIGN	BY Eric Watson	CHECKED Daniel Sessions
DETAILS	BY Jin Zhou	CHECKED Daniel Sessions
QUANTITIES	BY Greg Thornton	CHECKED Jie Tang

STATE OF CALIFORNIA
DEPARTMENT OF TRANSPORTATION

DIVISION OF ENGINEERING SERVICES
STRUCTURE DESIGN
DESIGN BRANCH 1

BRIDGE NO. 04E0036
POST MILE 111.46

ANCHORED BUTTRESS WALL NO. 12
FOUNDATION PLAN

STRUCTURES FOUNDATION PLAN SHEET (ENGLISH) (REV. 09-01-10)

ORIGINAL SCALE IN INCHES FOR REDUCED PLANS 0 1 2 3

UNIT: 3576
PROJECT NUMBER & PHASE: 01120001271
CONTRACT NO.: 01-0B4304

DISREGARD PRINTS BEARING EARLIER REVISION DATES

REVISION DATES: 08-26-14 02-26-15 05/02/15

SHEET 4 OF 7

FILE => wall12-e-fp.dgn

USERNAME => s132662 DATE PLOTTED => 26-JUL-2016 TIME PLOTTED => 09:57

DIST	COUNTY	ROUTE	POST MILES TOTAL PROJECT	SHEET No.	TOTAL SHEETS
01	Hum	101	111.3/111.7	71	83

Eric Watson 3-4-16
REGISTERED CIVIL ENGINEER DATE

June 20, 2016
PLANS APPROVAL DATE

REGISTERED PROFESSIONAL ENGINEER Eric Watson No. 64273 Exp. 6/30/15 CIVIL STATE OF CALIFORNIA

The State of California or its officers or agents shall not be responsible for the accuracy or completeness of scanned copies of this plan sheet.

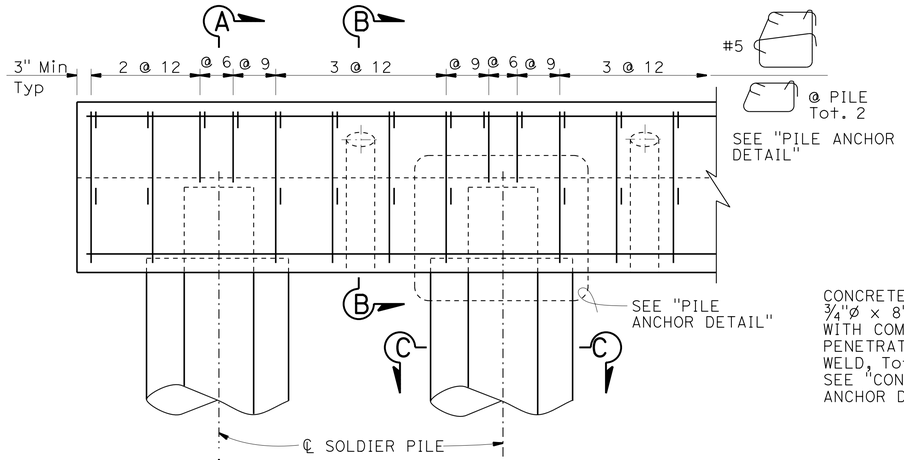

PART ELEVATION
3/4" = 1'-0"

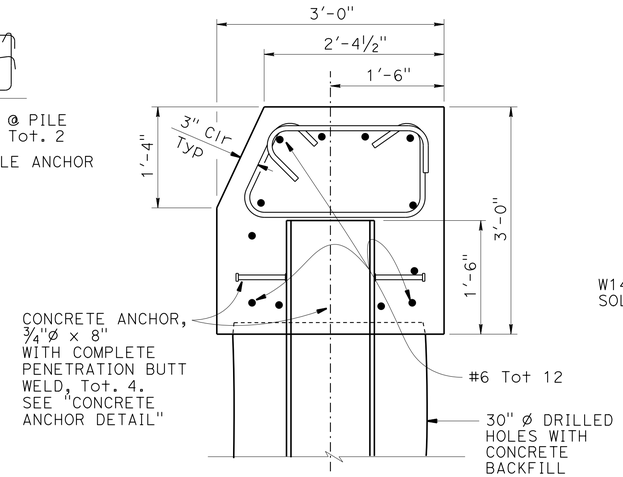

SECTION A-A
1" = 1'-0"

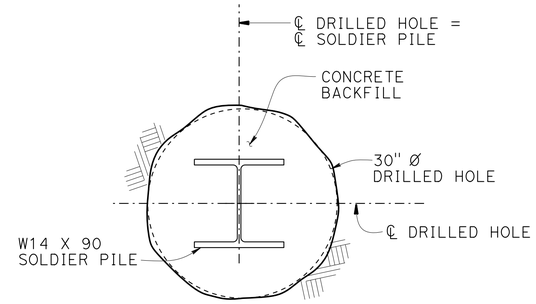

SECTION C-C
3" = 1'-0"

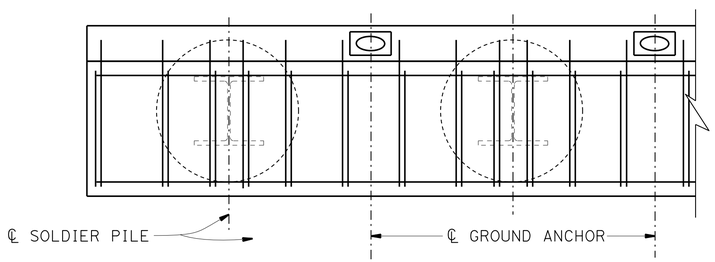

PLAN
3/4" = 1'-0"

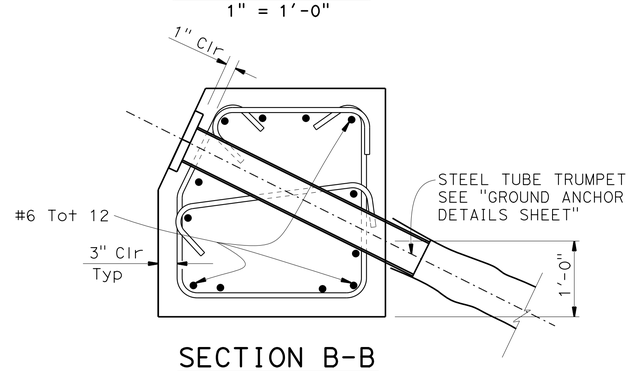

SECTION B-B
1" = 1'-0"

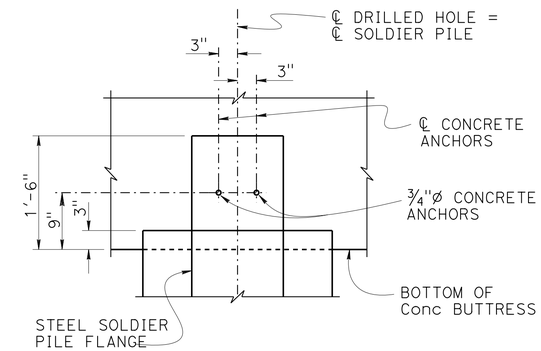

CONCRETE ANCHOR DETAIL
1" = 1'-0"

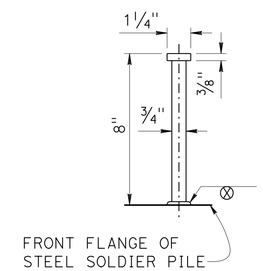

CONCRETE ANCHOR
3" = 1'-0"

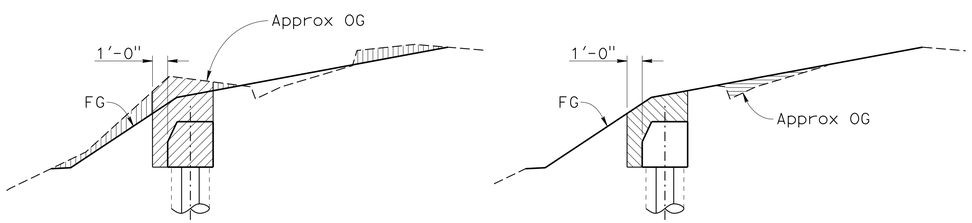

EXCAVATION BACKFILL

LEGEND:

- Indicates Structure Excavation (Soldier Pile Wall)
- Indicates Structure Backfill (Soldier Pile Wall)
- Indicates Roadway Excavation, See "ROADWAY PLANS"
- Indicates Roadway Embankment, See "ROADWAY PLANS"

LIMITS OF PAYMENT FOR EXCAVATION AND BACKFILL
NO SCALE

CONSTRUCTION SEQUENCE:

1. Excavate to bottom of Concrete Buttress and build temporary Working Bench where required.
2. Excavate back side of Concrete Buttress at 1:1 slope, or flatter, from top corner of Buttress to Original Grade. Concrete Buttress must be placed against undisturbed material.
3. Install Ground Anchors, see "Ground Anchor Details" sheet.
4. Construct Concrete Buttress.
5. Test Ground Anchors and lock off.
6. Backfill to Finish Grade.

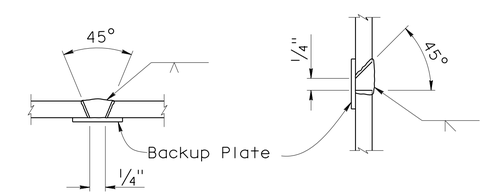

SINGLE VEE-GROOVE SINGLE BEVEL-GROOVE

PILE WELDING DETAIL-BUTT JOINTS
NO SCALE

NOTES:

a. Single Vee-Groove permitted for all position

b. Single Bevel-Groove permitted for horizontal joints only

DESIGN	BY Eric Watson	CHECKED Daniel Sessions	
DETAILS	BY Jin Zhou	CHECKED Daniel Sessions	
QUANTITIES	BY Greg Thornton	CHECKED Jie Tang	

STATE OF CALIFORNIA DEPARTMENT OF TRANSPORTATION

DIVISION OF ENGINEERING SERVICES STRUCTURE DESIGN DESIGN BRANCH 1

BRIDGE NO. 04E0036 POST MILE 111.46

ANCHORED BUTTRESS WALL NO. 12
BUTTRESS DETAILS

STRUCTURES DESIGN DETAIL SHEET (ENGLISH) (REV. 09-01-10)

ORIGINAL SCALE IN INCHES FOR REDUCED PLANS 0 1 2 3

UNIT: 3576
PROJECT NUMBER & PHASE: 01120001271 CONTRACT NO.: 01-0B4304

DISREGARD PRINTS BEARING EARLIER REVISION DATES → 09/02/14 10/26/15 05-18-15

SHEET 5 OF 7

FILE => wall12-f-det01.dgn

USERNAME => s132662 DATE PLOTTED => 26-JUL-2016 TIME PLOTTED => 09:57

DIST	COUNTY	ROUTE	POST MILES TOTAL PROJECT	SHEET No.	TOTAL SHEETS
01	Hum	101	111.3/111.7	72	83

Eric Watson 3-4-16
REGISTERED CIVIL ENGINEER DATE

June 20, 2016
PLANS APPROVAL DATE

REGISTERED PROFESSIONAL ENGINEER Eric Watson No. 64273 Exp. 6/30/17 CIVIL STATE OF CALIFORNIA

The State of California or its officers or agents shall not be responsible for the accuracy or completeness of scanned copies of this plan sheet.

NOTES:

(A) Level of initial grouting for drilled hole 6" in diameter or smaller

(B) Level of secondary grouting

(C) Level of initial grouting inside corrugated sheathing

(D) Face of wall excavation

NOTES:

1. Anchorage enclosure shall only be used when anchor head assembly is not enclosed in concrete.
2. Anchorage enclosure shall have provisions to allow injecting grout at low end and venting at high end. Galvanize after fabrication.
3. Silicone sealant to cover full width of flange.
4. Steel tube (Min thickness = 1/4") welded to bearing plate. Galvanize assembly after fabrication
5. Steel tube welded to bearing plate. Inside diameter of steel tube (Min thickness = 1/4") to be 1" greater than outside diameter of smooth sheathing. Galvanize assembly after fabrication.

* Vertical angle for Ground Anchors at Sta 11+15 and 11+20 shall be adjusted to avoid conflict with each other.

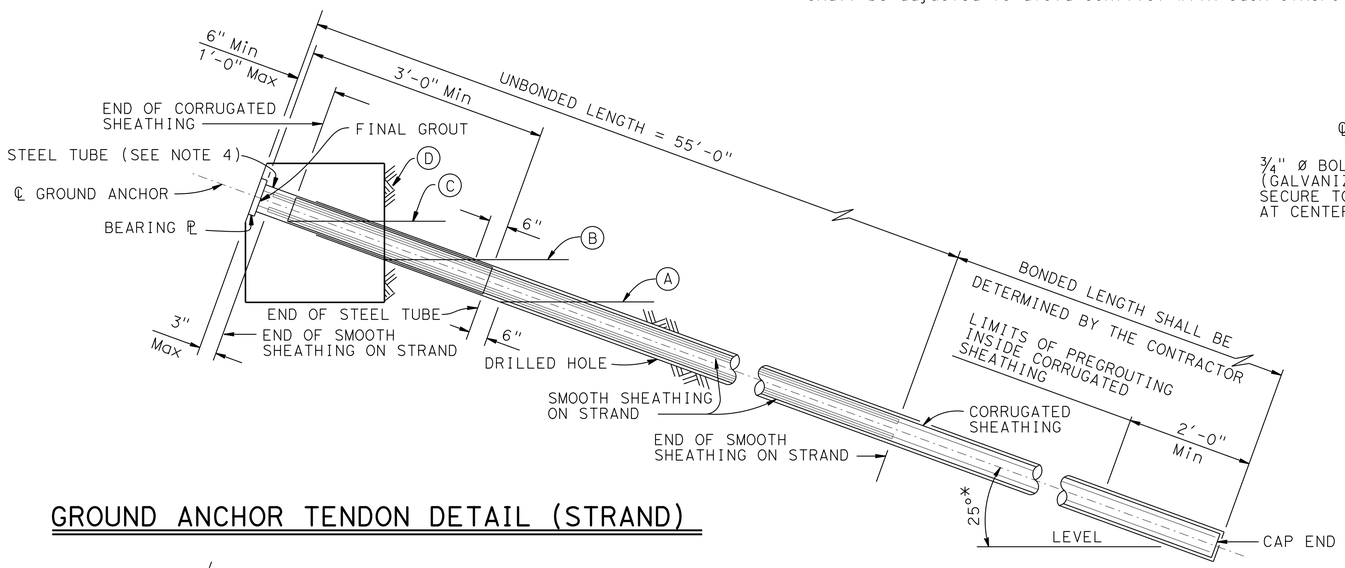

GROUND ANCHOR TENDON DETAIL (STRAND)

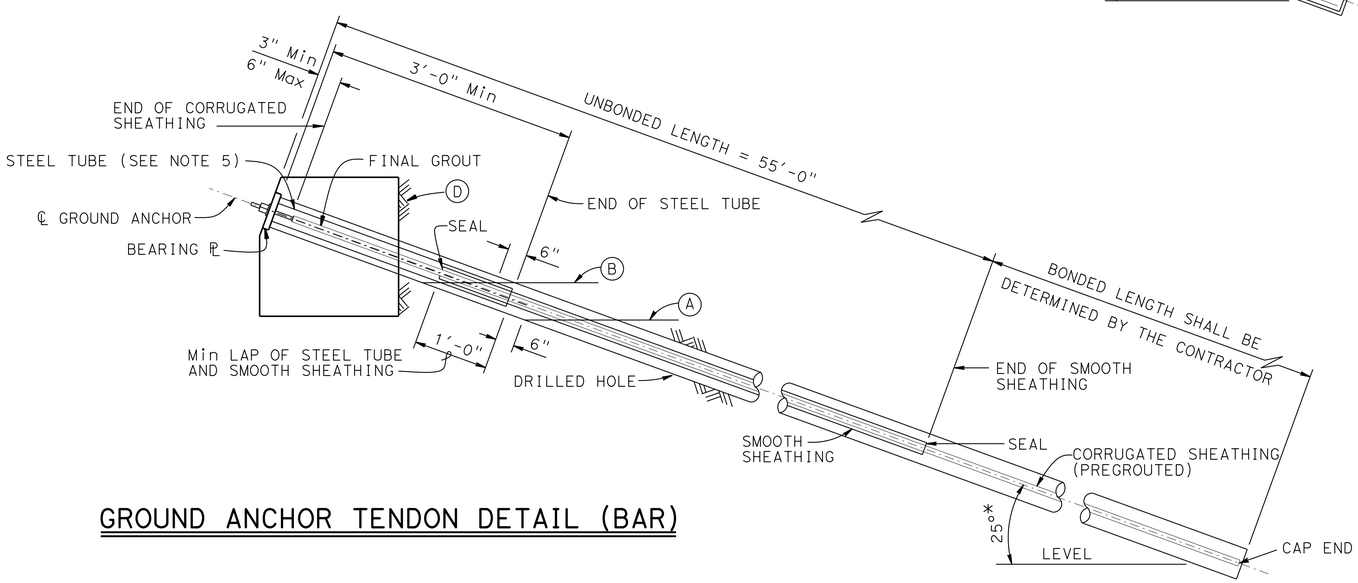

GROUND ANCHOR TENDON DETAIL (BAR)

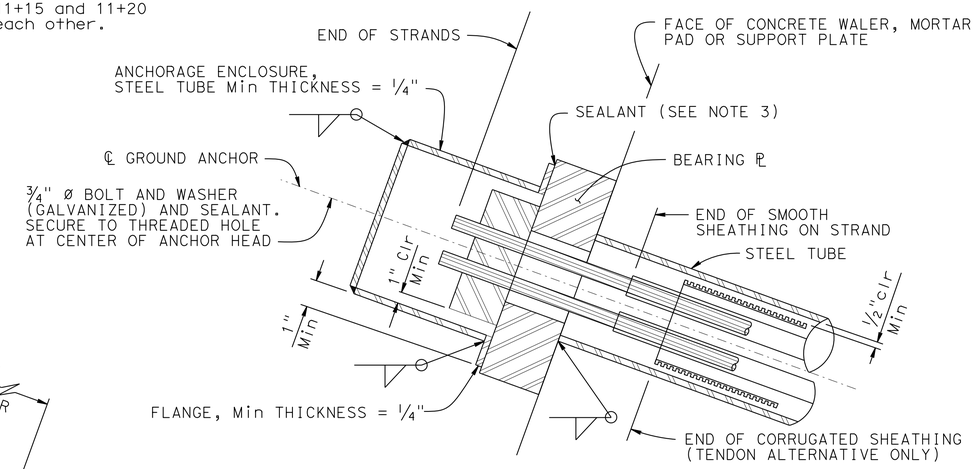

ALTERNATIVE X

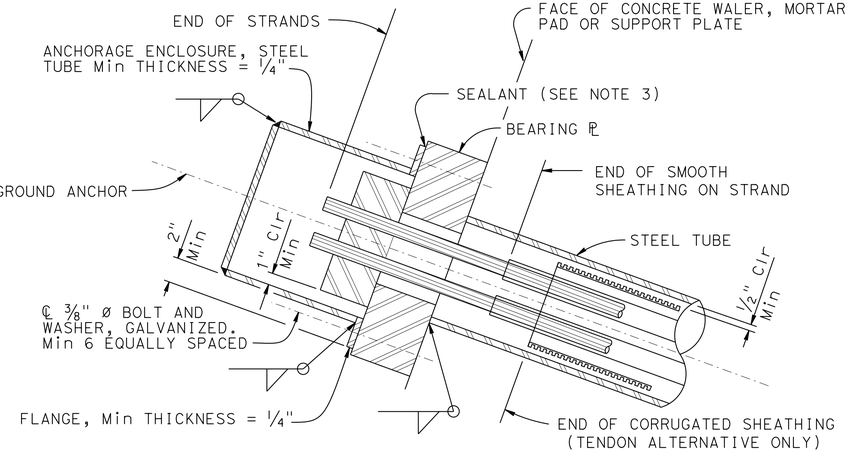

ALTERNATIVE Y

ANCHORAGE ENCLOSURE DETAILS

NO SCALE

DESIGN	BY Eric Watson	CHECKED Daniel Sessions	
DETAILS	BY Jin Zhou	CHECKED Daniel Sessions	
QUANTITIES	BY Greg Thornton	CHECKED Jie Tang	

STATE OF CALIFORNIA
DEPARTMENT OF TRANSPORTATION

DIVISION OF ENGINEERING SERVICES
STRUCTURE DESIGN
DESIGN BRANCH 1

BRIDGE NO. 04E0036
POST MILE 111.46

ANCHORED BUTTRESS WALL NO. 12

GROUND ANCHOR DETAILS

STRUCTURES DESIGN DETAIL SHEET (ENGLISH) (REV. 09-01-10)

ORIGINAL SCALE IN INCHES FOR REDUCED PLANS 0 1 2 3

UNIT: 3576
PROJECT NUMBER & PHASE: 01120001271
CONTRACT NO.: 01-0B4304

DISREGARD PRINTS BEARING EARLIER REVISION DATES

REVISION DATES: 08/25/14 02/24/15 05/02/15

SHEET 6 OF 7

FILE => wall12-grou-det_xs12-040.dgn

USERNAME => s132662 DATE PLOTTED => 26-JUL-2016 TIME PLOTTED => 09:57

DIST	COUNTY	ROUTE	POST MILES TOTAL PROJECT	SHEET No.	TOTAL SHEETS
01	Hum	101	111.3/111.7	73	83

REGISTERED CIVIL ENGINEER — DATE 5-18-15

June 20, 2016
PLANS APPROVAL DATE

REGISTERED PROFESSIONAL ENGINEER — Kathy Gallagher — No. C62012 — Exp. 9-30-15 — CIVIL — STATE OF CALIFORNIA

The State of California or its officers or agents shall not be responsible for the accuracy or completeness of electronic copies of this plan sheet.

This LOTB sheet was prepared in accordance with the Caltrans Soil & Rock Logging, Classification, & Presentation Manual (2010 Edition).

See 2010 Standard Plans A10F and A10G for Soil Legend, and A10H for Rock Legend.

BENCH MARK

SUHV 11146 Elev 102.754
"X-NE CONC. SOLAR PAD"
N 2323845.572
E 5981067.290
NAVD 88

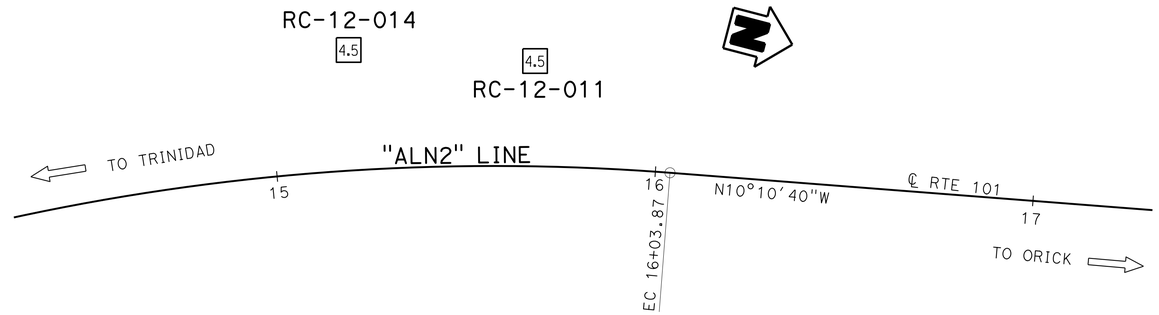

PLAN

1" = 20'

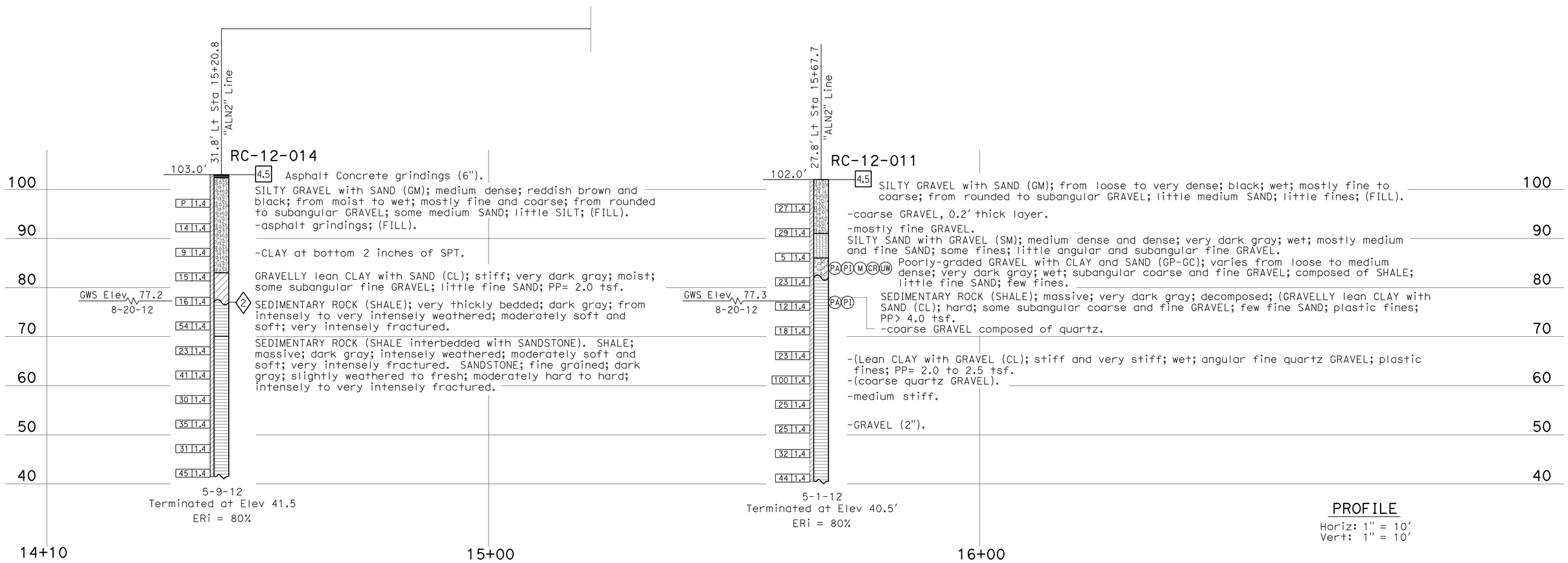

PROFILE

Horiz: 1" = 10'
Vert: 1" = 10'

ENGINEERING SERVICES	MATERIALS AND GEOTECHNICAL SERVICES	STATE OF CALIFORNIA DEPARTMENT OF TRANSPORTATION	DIVISION OF ENGINEERING SERVICES STRUCTURE DESIGN DESIGN BRANCH 1	BRIDGE NO. 04E0036 POST MILE 111.46	ANCHORED BUTTRESS WALL NO. 12 LOG OF TEST BORINGS
FUNCTIONAL SUPERVISOR NAME: C. Narwold	DRAWN BY: I. G-Remmen, F. Nguyen CHECKED BY: R. Newman	FIELD INVESTIGATION BY: K. Gallagher / M.J. James			

OGS CIVIL LOG OF TEST BORINGS SHEET

ORIGINAL SCALE IN INCHES FOR REDUCED PLANS 0 1 2 3

UNIT: 3650
PROJECT NUMBER & PHASE: 01120001271 CONTRACT NO.: 01-0B4304

DISREGARD PRINTS BEARING EARLIER REVISION DATES

REVISION DATES 05-06-15 05-06-15 05-18-15

SHEET 7 OF 7

FILE => wall12-z-lotb.dgn

USERNAME => s132662 DATE PLOTTED => 26-JUL-2016 TIME PLOTTED => 09:57

DIST	COUNTY	ROUTE	POST MILES TOTAL PROJECT	SHEET No.	TOTAL SHEETS
01	Hum	101	111.3/111.7	74	83

Eric Watson 3-4-16
REGISTERED CIVIL ENGINEER DATE

June 20, 2016
PLANS APPROVAL DATE

REGISTERED PROFESSIONAL ENGINEER Eric Watson No. 64273 Exp. 6/30/17 CIVIL STATE OF CALIFORNIA

The State of California or its officers or agents shall not be responsible for the accuracy or completeness of scanned copies of this plan sheet.

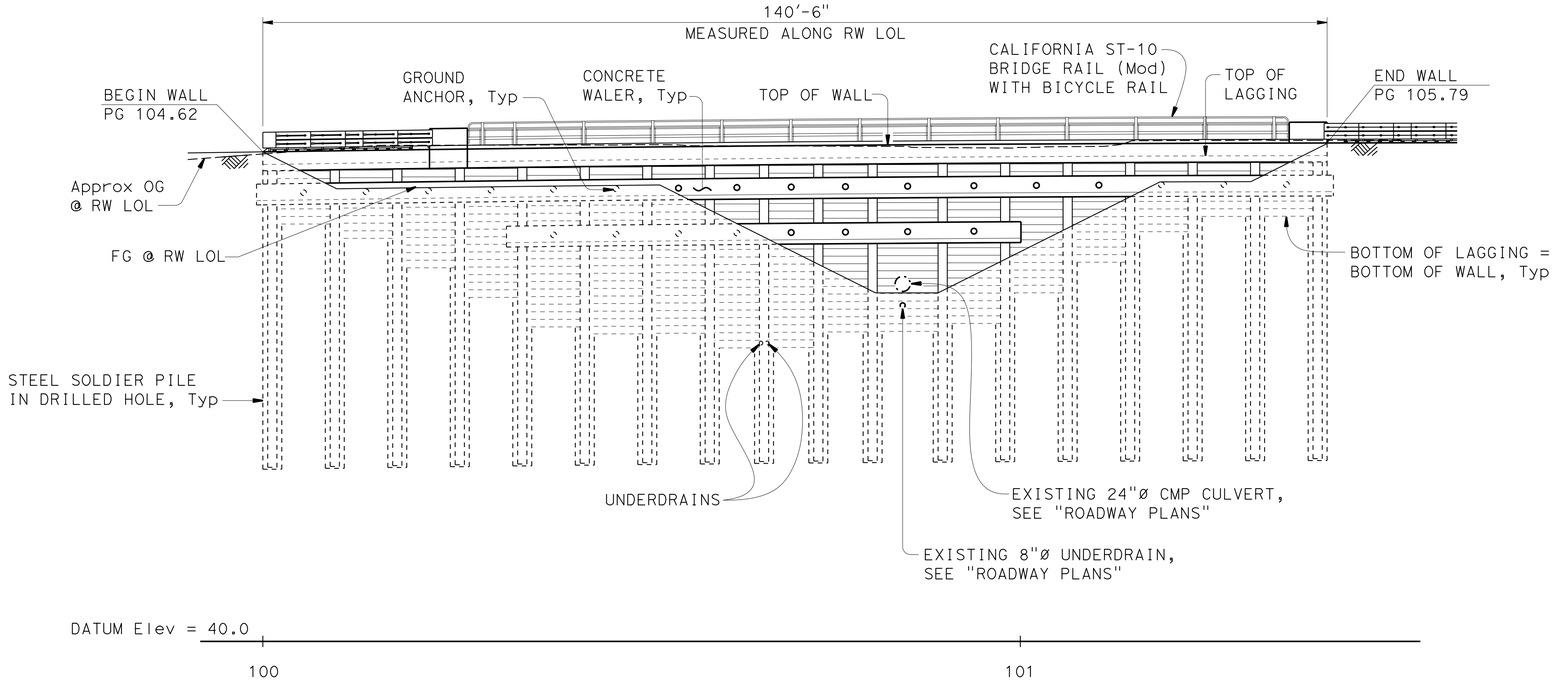

MIRRORED ELEVATION

1" = 10'

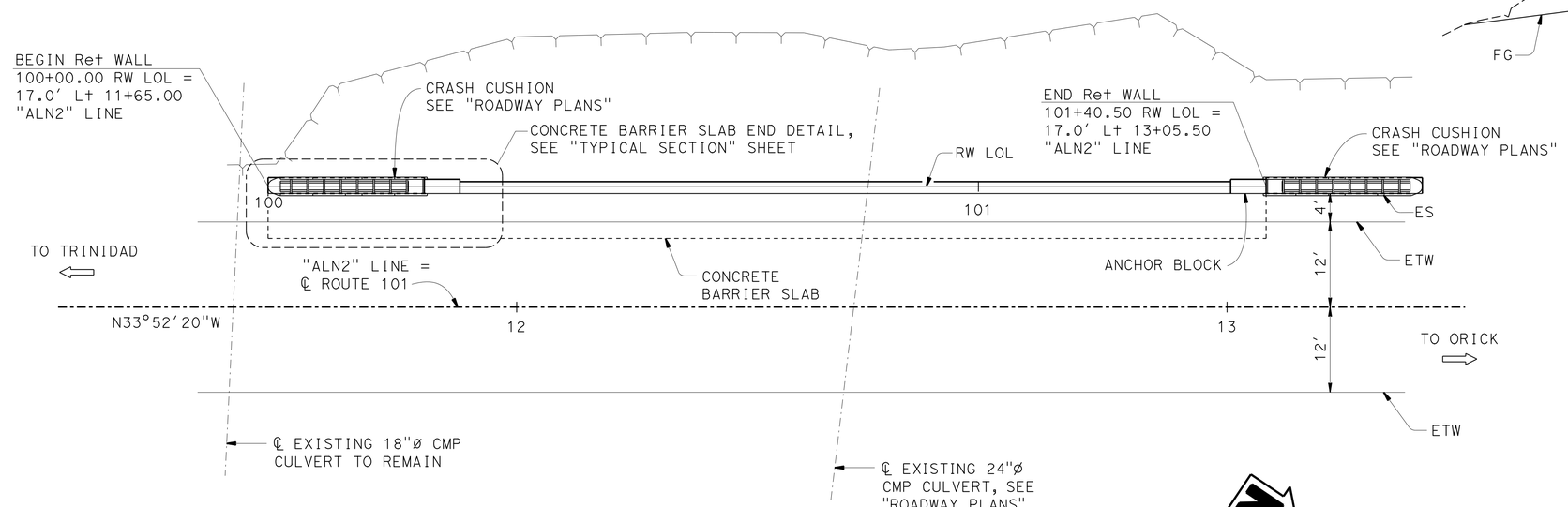

PLAN

1" = 10'

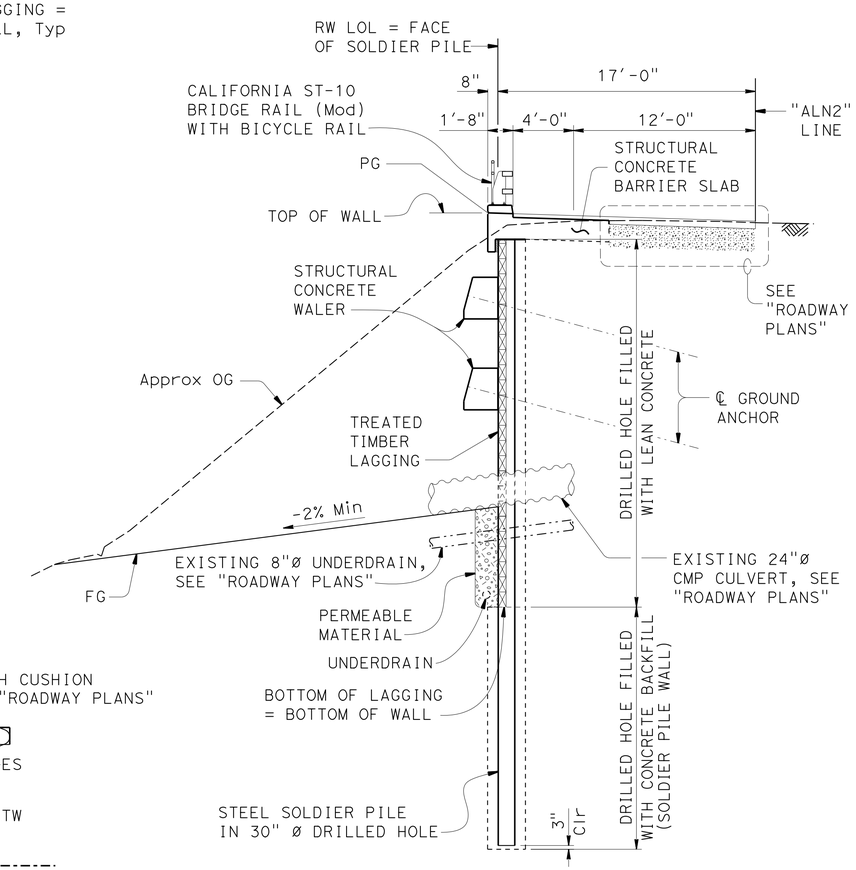

TYPICAL SECTION

1" = 5'

For "INDEX TO PLANS, STANDARD PLANS LIST, QUANTITIES and GENERAL NOTES", see "INDEX TO PLANS" sheet.

Jeff Sims
DESIGN ENGINEER

	BY	CHECKED		BY	CHECKED
DESIGN	Rizia da Cruz Ferreira	Glen Lawson	LOAD & RESISTANCE FACTOR DESIGN		
DETAILS	Bob Huddleston	Glen Lawson	LAYOUT	Rizia da Cruz Ferreira	Glen Lawson
QUANTITIES	Eric Watson	Jin Zhou	SPECIFICATIONS	Jennifer Ramierez	PLANS AND SPECS COMPARED Sharon Hansen

ORIGINAL SCALE IN INCHES FOR REDUCED PLANS 0 1 2 3

STATE OF CALIFORNIA
DEPARTMENT OF TRANSPORTATION

DIVISION OF ENGINEERING SERVICES
STRUCTURE DESIGN
DESIGN BRANCH 1

UNIT: 3576
PROJECT NUMBER & PHASE: 01120001271
CONTRACT NO.: 01-0B4304

BRIDGE NO. 04E0037
POST MILE 111.42

SOLDIER PILE WALL NO. 14
GENERAL PLAN

DISREGARD PRINTS BEARING EARLIER REVISION DATES

REVISION DATES 7-31-14 09-08-15 06-01-15

SHEET 1 OF 10

USERNAME => s132662 DATE PLOTTED => 26-JUL-2016 TIME PLOTTED => 09:58

STRUCTURES DESIGN GENERAL PLAN SHEET (ENGLISH) (REV.09-01-10)

FILE => wall14-a-gp.dgn

DIST	COUNTY	ROUTE	POST MILES TOTAL PROJECT	SHEET No.	TOTAL SHEETS
01	Hum	101	111.3/111.7	75	83

Eric Watson 3-4-16
REGISTERED CIVIL ENGINEER DATE

June 20, 2016
PLANS APPROVAL DATE

REGISTERED PROFESSIONAL ENGINEER Eric Watson No. 64273 Exp. 6/30/17 CIVIL STATE OF CALIFORNIA

The State of California or its officers or agents shall not be responsible for the accuracy or completeness of scanned copies of this plan sheet.

INDEX TO PLANS

1 GENERAL PLAN
2 INDEX TO PLANS
3 STRUCTURE PLAN
4 FOUNDATION PLAN
5 TYPICAL SECTION
6 WALL DETAILS
7 GROUND ANCHOR DETAILS
8 DRAINAGE DETAILS
9 CALIFORNIA ST-10 BRIDGE RAIL (MOD) DETAILS
10 LOG OF TEST BORINGS

STANDARD PLANS 2010

	A10A	ABBREVIATIONS (SHEET 1 OF 2)
RSP	A10B	ABBREVIATIONS (SHEET 2 OF 2)
	A10C	LINES AND SYMBOLS (SHEET 1 OF 3)
	A10D	LINES AND SYMBOLS (SHEET 2 OF 3)
	A10E	LINES AND SYMBOLS (SHEET 3 OF 3)
	A10F	LEGEND - SOIL (SHEET 1 OF 2)
	A10G	LEGEND - SOIL (SHEET 2 OF 2)
	A10H	LEGEND - ROCK
RSP	B11-47	CABLE RAILING
RSP	B11-68	CALIFORNIA ST-10 BRIDGE RAIL (1 OF 3)
	B11-69	CALIFORNIA ST-10 BRIDGE RAIL (2 OF 3)
RSP	B11-70	CALIFORNIA ST-10 BRIDGE RAIL (3 OF 3)

STANDARD PLAN SHEET No.
DETAIL No.

QUANTITIES

STRUCTURE EXCAVATION (SOLDIER PILE WALL)	280	CY
STRUCTURE BACKFILL (SOLDIER PILE WALL)	111	CY
CONCRETE BACKFILL (SOLDIER PILE WALL)	77	CY
LEAN CONCRETE BACKFILL	54	CY
GROUND ANCHOR (SUBHORIZONTAL)	25	EA
STEEL SOLDIER PILE (HP 14 X 73)	720	LF
30" DRILLED HOLE	725	LF
STRUCTURAL CONCRETE, BARRIER SLAB	65	CY
STRUCTURAL CONCRETE, WALER	43	CY
BAR REINFORCING STEEL (EPOXY COATED)(WALER)	12,170	LB
TIMBER LAGGING	13	MFBM
CLEAN AND PAINT STEEL SOLDIER PILING	LUMP	SUM
PREPARE AND STAIN CONCRETE	1,415	SQFT
6" PERFORATED PLASTIC PIPE UNDERDRAIN	146	LF
6" NON-PERFORATED PLASTIC PIPE UNDERDRAIN	27	LF
CALIFORNIA ST-10 BRIDGE RAIL (MODIFIED) WITH BICYCLE RAILING	119	LF

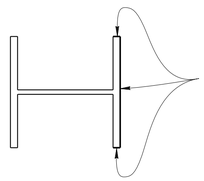

LIMITS OF FINISH COAT STEEL SOLDIER PILE

NO SCALE

LEGEND:

- Structure Excavation (Soldier Pile Wall)
- Structure Backfill (Soldier Pile Wall)
- Permeable Material

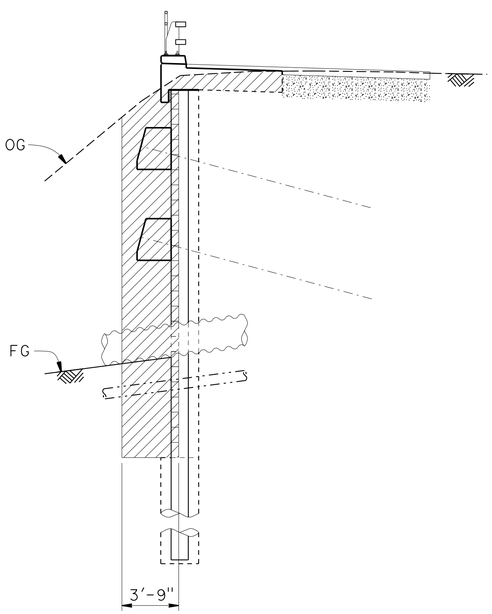

EXCAVATION

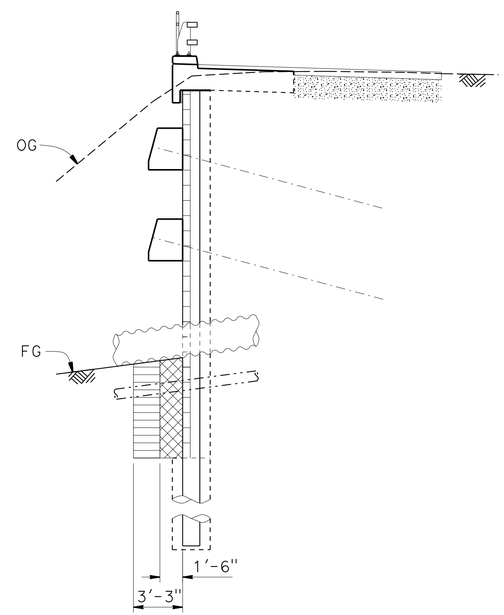

BACKFILL

LIMITS OF EXCAVATION AND BACKFILL

1" = 5'

GENERAL NOTES
LOAD AND RESISTANCE FACTOR DESIGN

DESIGN:

AASHTO LRFD Bridge Design Specifications, 2012 Edition with Caltrans Amendments, preface dated January 2014.

LIVE LOAD:

2'-0" Level Earth Surcharge

SOIL PARAMETERS (For determination of Design Lateral Earth Pressures):

0'-27' from surface: $\Phi = 26°$, $\gamma = 125$ pcf
27'+ from surface: $\Phi = 38°$, $\gamma = 140$ pcf , c = 500 psf, Cohesion used for seismic only

SEISMIC LOADING:

PGA = 0.63g
Horizontal seismic coefficient (k_h) = 0.32
Vertical seismic coefficient (k_v) = 0.0

STRUCTURAL STEEL:

f_y = 50 ksi

REINFORCED CONCRETE:

f_y = 60 ksi
f'_c = 3.6 ksi
n = 8

PRESTRESSING STEEL (GROUND ANCHORS):

Strands - ASTM designation:A416 (270 ksi Low Relaxation Steel)
Bars - ASTM designation: A722 Type II (150 ksi)
FTL = Factored Test Load Per Anchor (kips)
FDL = Factored Design Load Per Anchor
FTL = 1.0 FDL
LL = Lock-Off Load = 0.55 FDL
f_{pu} = Minimum ultimate tensile stress of steel in ground anchor (kips/in^2)
A_s (Min) = Minimum cross sectional area of prestressing steel in ground anchor (in^2)

$$A_s\,(\text{Min}) = \frac{1.0\ \text{FTL}}{0.75\ f_{pu}}$$

STRUCTURAL TIMBER:

Treated Douglas Fir No.1 or better
Timber to be full sawn

	BY	CHECKED
DESIGN	Rizia da Cruz Ferreira	Glen Lawson
DETAILS	Bob Huddleston	Glen Lawson
QUANTITIES	Eric Watson	Jin Zhou

STATE OF CALIFORNIA
DEPARTMENT OF TRANSPORTATION

DIVISION OF ENGINEERING SERVICES
STRUCTURE DESIGN
DESIGN BRANCH 1

BRIDGE NO. 04E0037
POST MILE 111.42

SOLDIER PILE WALL NO. 14
INDEX TO PLANS

STRUCTURES DESIGN DETAIL SHEET (ENGLISH) (REV. 09-01-10)

ORIGINAL SCALE IN INCHES FOR REDUCED PLANS 0 1 2 3

UNIT: 3576
PROJECT NUMBER & PHASE: 01120001271
CONTRACT NO.: 01-0B4304

DISREGARD PRINTS BEARING EARLIER REVISION DATES

REVISION DATES 10-02-14 03-26-15 10/26/15

SHEET 2 OF 10

FILE => wall14-a-itp.dgn

USERNAME => s132662 DATE PLOTTED => 26-JUL-2016 TIME PLOTTED => 09:58

DIST	COUNTY	ROUTE	POST MILES TOTAL PROJECT	SHEET No.	TOTAL SHEETS
01	Hum	101	111.3/111.7	76	83

Eric Watson 3-4-16
REGISTERED CIVIL ENGINEER DATE

June 20, 2016
PLANS APPROVAL DATE

REGISTERED PROFESSIONAL ENGINEER Eric Watson No. 64273 Exp. 6/30/17 CIVIL STATE OF CALIFORNIA

The State of California or its officers or agents shall not be responsible for the accuracy or completeness of scanned copies of this plan sheet.

NOTES:

1. All steel soldier piles are HP 14 x 73, 40'-0" long. See "GENERAL NOTES" on "INDEX TO PLANS" sheet for specifications.
2. California ST-10 Bridge Rail (Mod) not shown.
3. For underdrain details, see "DRAINAGE DETAILS" sheet.
4. For "CULVERT PENETRATION DETAIL", see "DRAINAGE DETAILS" sheet.
5. Existing culvert and retaining wall intersection to be verified by the Contractor.
6. Ground Anchor locations and horizontal angle to be adjusted by the Contractor and approved by the Engineer in order to avoid existing culvert

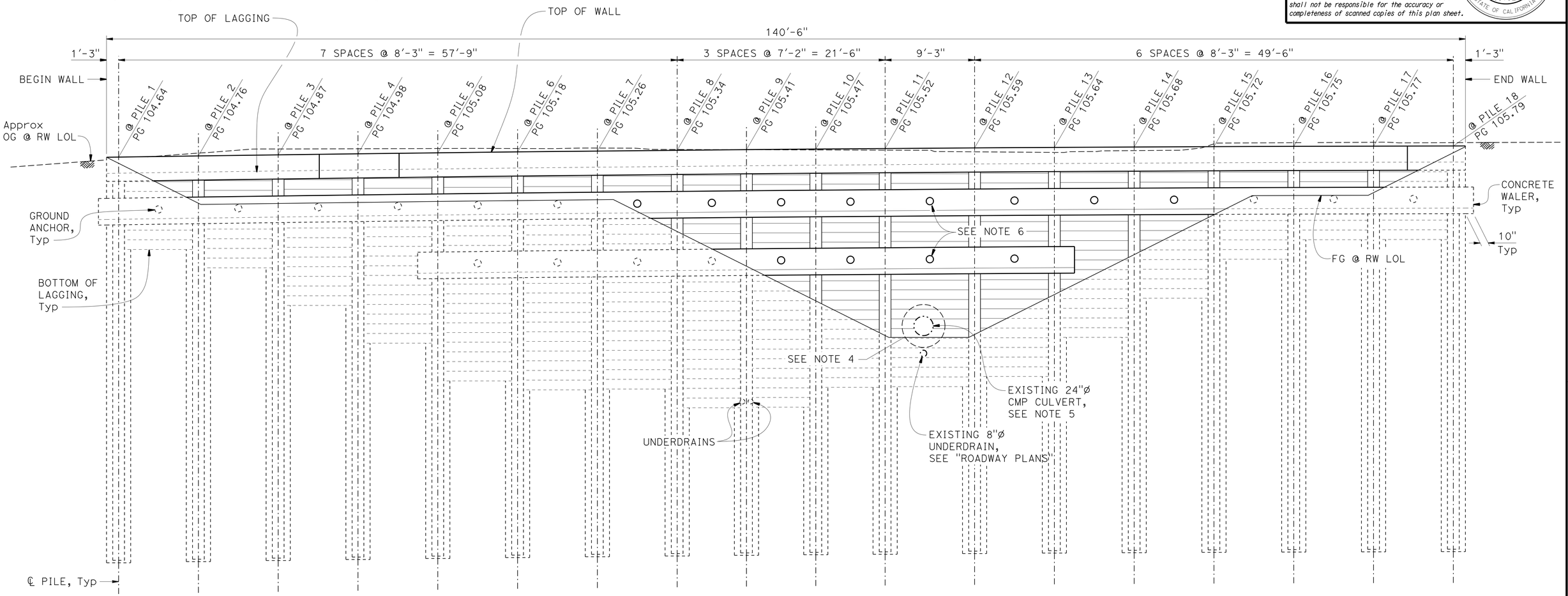

No. OF TIMBER LAGGINGS BETWEEN PILES	8	10	14	18	22	23	23	25	25	23	23	22	18	14	10	8	8
UPPER ANCHOR FDL (Kips)	80	80	132	186	155	155	155	155	155	155	155	155	186	132	80	80	80
LOWER ANCHOR FDL (Kips)					132	132	132	132	132	132	132	132					

DATUM Elev 45.0

100 101

MIRRORED ELEVATION

1" = 5'

DESIGN	BY Rizia da Cruz Ferreira	CHECKED Glen Lawson	
DETAILS	BY Bob Huddleston	CHECKED Glen Lawson	
QUANTITIES	BY Eric Watson	CHECKED Jin Zhou	

STATE OF CALIFORNIA
DEPARTMENT OF TRANSPORTATION

DIVISION OF ENGINEERING SERVICES
STRUCTURE DESIGN
DESIGN BRANCH 1

BRIDGE NO. 04E0037
POST MILE 111.42

SOLDIER PILE WALL NO. 14
STRUCTURE PLAN

STRUCTURES DESIGN DETAIL SHEET (ENGLISH) (REV. 09-01-10)

ORIGINAL SCALE IN INCHES FOR REDUCED PLANS 0 1 2 3

UNIT: 3576
PROJECT NUMBER & PHASE: 01120001271
CONTRACT NO.: 01-0B4304

DISREGARD PRINTS BEARING EARLIER REVISION DATES

REVISION DATES: 10-01-14 09-08-15 03-24-15

SHEET 3 OF 10

FILE => wall14-c-sp01.dgn

USERNAME => s132662 DATE PLOTTED => 26-JUL-2016 TIME PLOTTED => 09:58

DIST	COUNTY	ROUTE	POST MILES TOTAL PROJECT	SHEET No.	TOTAL SHEETS
01	Hum	101	111.3/111.7	77	83

Eric Watson 3-4-16
REGISTERED CIVIL ENGINEER DATE

June 20, 2016
PLANS APPROVAL DATE

REGISTERED PROFESSIONAL ENGINEER
Eric Watson
No. 64273
Exp. 6/30/17
CIVIL
STATE OF CALIFORNIA

The State of California or its officers or agents shall not be responsible for the accuracy or completeness of electronic copies of this plan sheet.

CURVE DATA

No. ®	R	Δ	T	L
1	600.00	23°41'40"	125.86	248.13

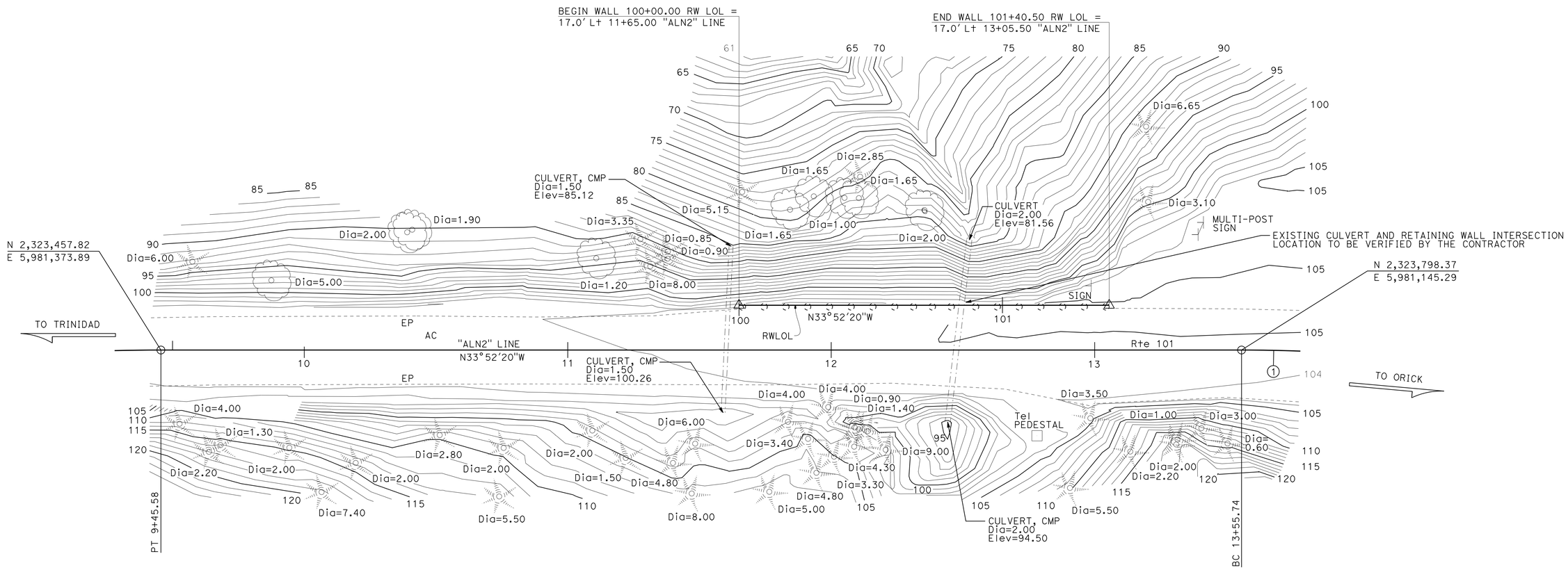

SURVEY CONTROL

SUHV11146 (SHOWN ON FOUNDATION PLAN No. 2)
Fnd X-NE Conc SOLAR PAD
43.78 Ft Lt "ALN2" LINE Rte 101
Sta 14+32.99
N 2,323,845.57
E 5,981,067.29
Elev = 102.75

PRHV11160 (SHOWN ON FOUNDATION PLAN No. 3)
Fnd ALCAR
45.05 Ft Lt "ALN2" LINE Rte 101
Sta 23+84.28
N 2,324,795.23
E 5,980,873.09
Elev = 44.25

PRELIMINARY INVESTIGATION SECTION

SCALE	VERT.DATUM NAVD88	PHOTOGRAMMETRY AS OF: X			
1"=20'	HORZ.DATUM NAD83 (1991.35)	SURVEYED	BY DISTRICT	CHECKED	BY D. IVY 7/2014
ALIGNMENT TIES Dist. Traverse Sheet		DRAFTED	BY L. YOUNG 7/2014	CHECKED	BY S. SOU 7/2014

DESIGN	BY Rizia da Cruz Ferreira	CHECKED Glen Lawson
DETAILS	BY Bob Huddleston	CHECKED Glen Lawson
QUANTITIES	BY Eric Watson	CHECKED Jin Zhou

STATE OF CALIFORNIA
DEPARTMENT OF TRANSPORTATION

DIVISION OF ENGINEERING SERVICES
STRUCTURE DESIGN
DESIGN BRANCH 1

BRIDGE NO. 04E0037
POST MILE 111.42

SOLDIER PILE WALL NO. 14
FOUNDATION PLAN

STRUCTURES FOUNDATION PLAN SHEET (ENGLISH) (REV. 09-01-10)

ORIGINAL SCALE IN INCHES FOR REDUCED PLANS 0 1 2 3

UNIT: 3646
PROJECT NUMBER & PHASE: 01120001271
CONTRACT NO.: 01-0B4304

DISREGARD PRINTS BEARING EARLIER REVISION DATES

REVISION DATES 10-14-14 03-26-15

SHEET 4 OF 10

FILE => wal114-e-fp.dgn

DIST	COUNTY	ROUTE	POST MILES TOTAL PROJECT	SHEET No.	TOTAL SHEETS
01	Hum	101	111.3/111.7	78	83

Eric Watson 3-4-16
REGISTERED CIVIL ENGINEER DATE

June 20, 2016
PLANS APPROVAL DATE

REGISTERED PROFESSIONAL ENGINEER Eric Watson No. 64273 Exp. 6/30/17 CIVIL STATE OF CALIFORNIA

The State of California or its officers or agents shall not be responsible for the accuracy or completeness of scanned copies of this plan sheet.

NOTE:
All reinforcement to be epoxy coated

LEGEND:
- Indicates bundled bars

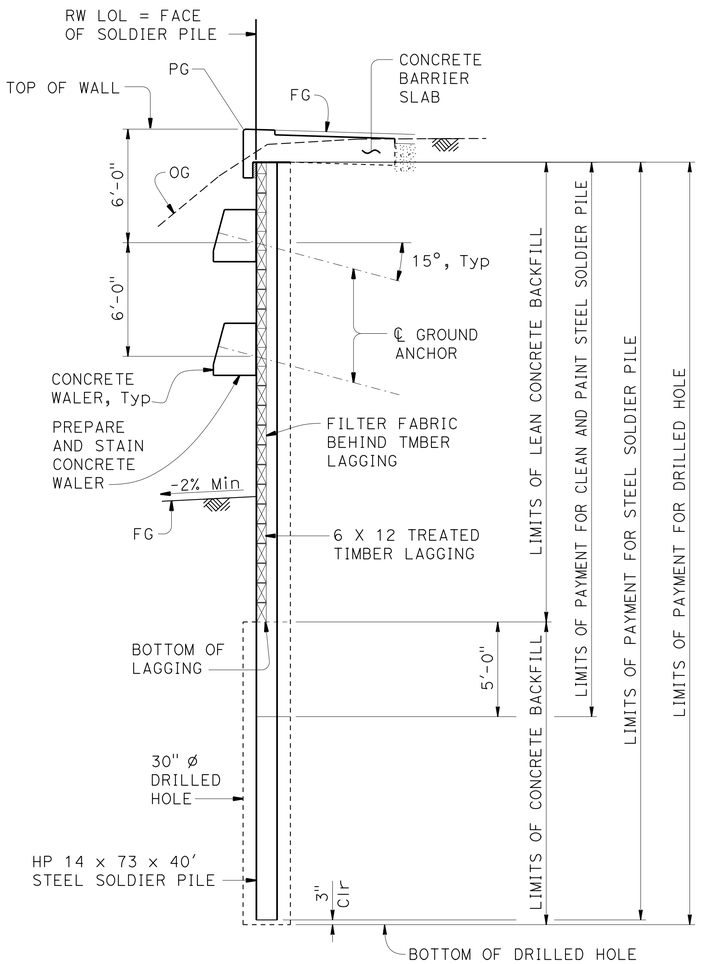

TYPICAL SECTION
¼" = 1'-0"

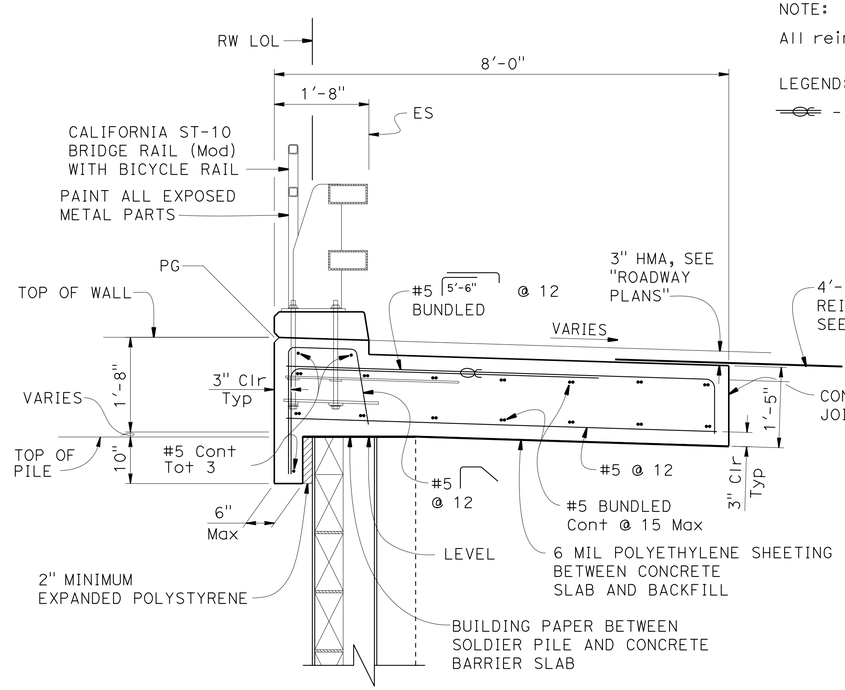

CONCRETE BARRIER SLAB DETAIL
¾" = 1'-0"

NOTE:
For details not shown, see "CALIFORNIA ST-10 BRIDGE RAIL (MOD) DETAILS" sheet and RSP B11-68

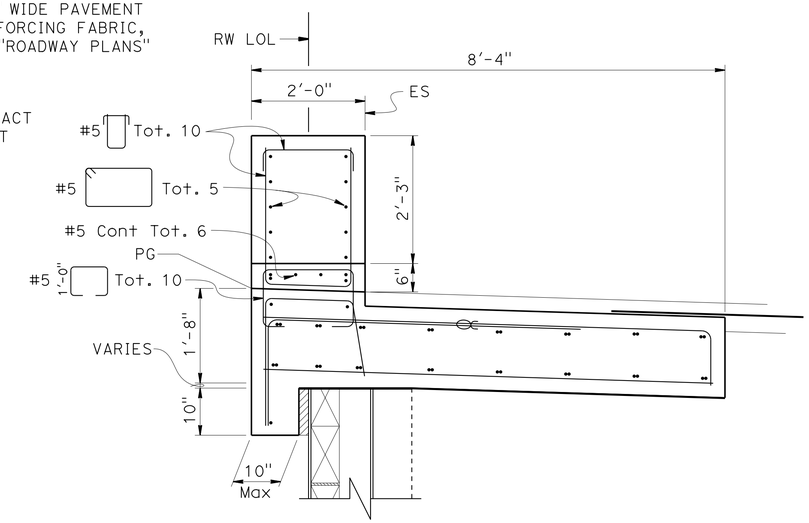

SECTION F-F
¾" = 1'-0"

NOTE:
For details not shown, see "CONCRETE BARRIER SLAB DETAIL"

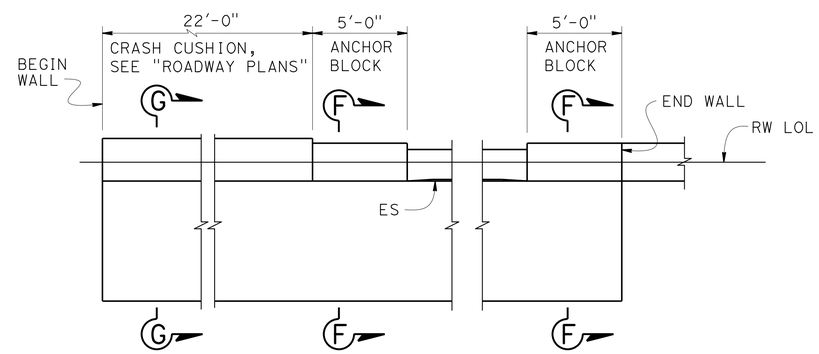

PLAN

CONCRETE BARRIER SLAB END DETAIL
¼" = 1'-0"

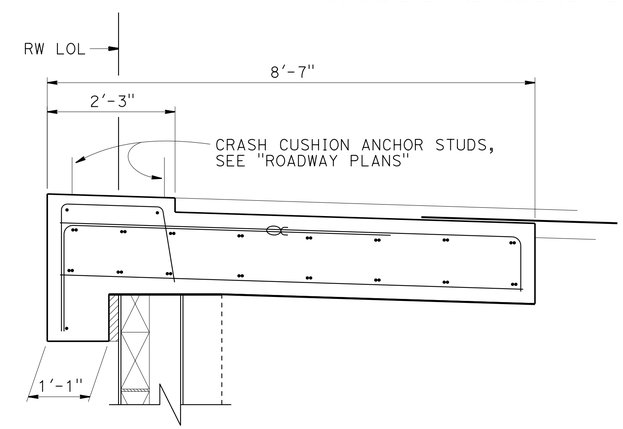

SECTION G-G
¾" = 1'-0"

NOTE:
For details not shown, see "CONCRETE BARRIER SLAB DETAIL"

	BY	CHECKED
DESIGN	Rizia da Cruz Ferreira	Glen Lawson
DETAILS	B. Huddleston/G. Dickerson	Glen Lawson
QUANTITIES	Eric Watson	Jin Zhou

STATE OF CALIFORNIA
DEPARTMENT OF TRANSPORTATION

DIVISION OF ENGINEERING SERVICES
STRUCTURE DESIGN
DESIGN BRANCH 1

BRIDGE NO. 04E0037
POST MILE 111.42

SOLDIER PILE WALL NO. 14
TYPICAL SECTION

STRUCTURES DESIGN DETAIL SHEET (ENGLISH) (REV. 09-01-10)

ORIGINAL SCALE IN INCHES FOR REDUCED PLANS 0 1 2 3

UNIT: 3576
PROJECT NUMBER & PHASE: 01120001271
CONTRACT NO.: 01-0B4304

DISREGARD PRINTS BEARING EARLIER REVISION DATES

REVISION DATES: 10-06-14 12-07-15 06-02-16

SHEET 5 OF 10

FILE => wall14-k-ts01.dgn

USERNAME => s132662 DATE PLOTTED => 26-JUL-2016 TIME PLOTTED => 09:58

DIST	COUNTY	ROUTE	POST MILES TOTAL PROJECT	SHEET No.	TOTAL SHEETS
01	Hum	101	111.3/111.7	79	83

Eric Watson 3-4-16
REGISTERED CIVIL ENGINEER DATE

June 20, 2016
PLANS APPROVAL DATE

REGISTERED PROFESSIONAL ENGINEER Eric Watson No. 64273 Exp. 6/30/17 CIVIL STATE OF CALIFORNIA

The State of California or its officers or agents shall not be responsible for the accuracy or completeness of scanned copies of this plan sheet.

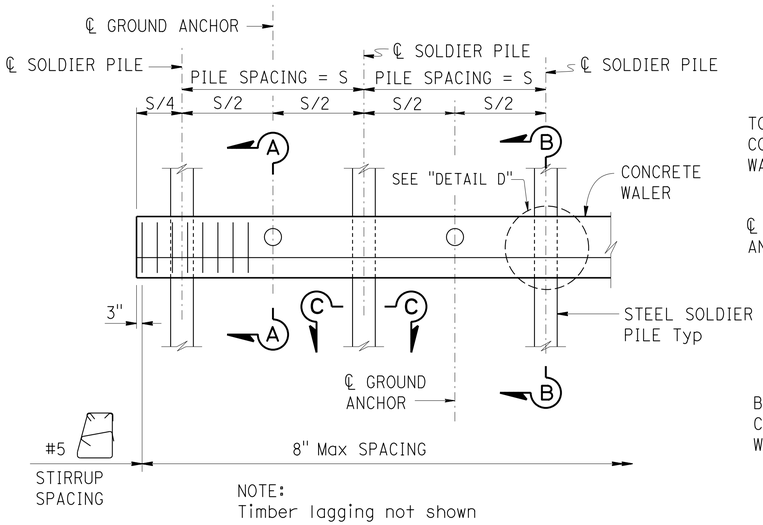

NOTE:
Timber lagging not shown

WALER PART ELEVATION
NO SCALE

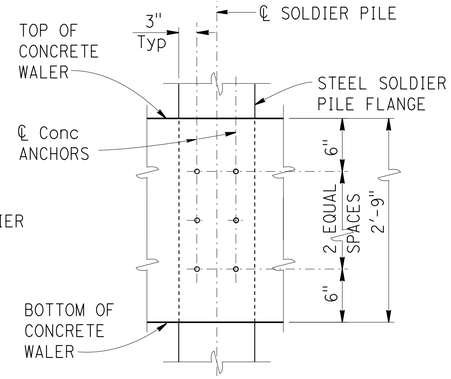

DETAIL D
NO SCALE

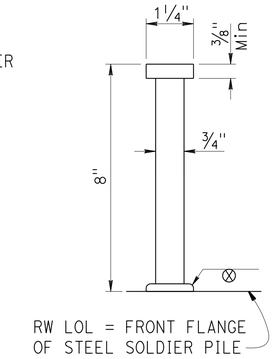

CONCRETE ANCHOR DETAIL
NO SCALE

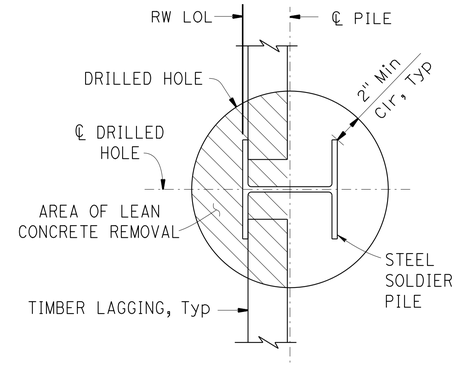

SECTION C-C
NO SCALE

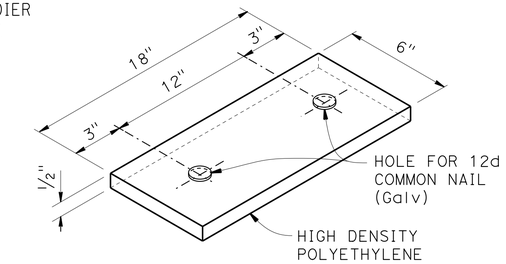

SHIM DETAIL
NO SCALE

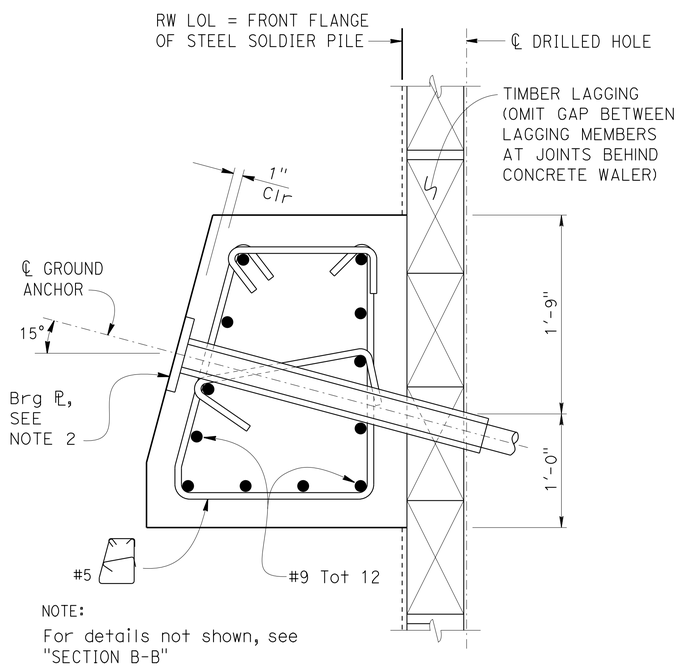

NOTE:
For details not shown, see "SECTION B-B"

SECTION A-A
1½" = 1'-0"

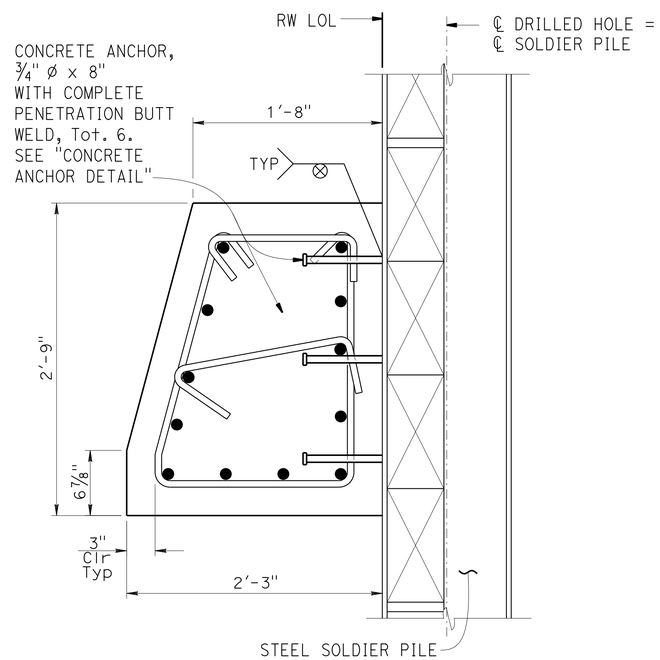

SECTION B-B
1½" = 1'-0"

NOTES:
1. Concrete walers may be poured to face of lagging.
2. Bearing plates may be recessed or on face of concrete waler.
3. All reinforcement to be epoxy coated.

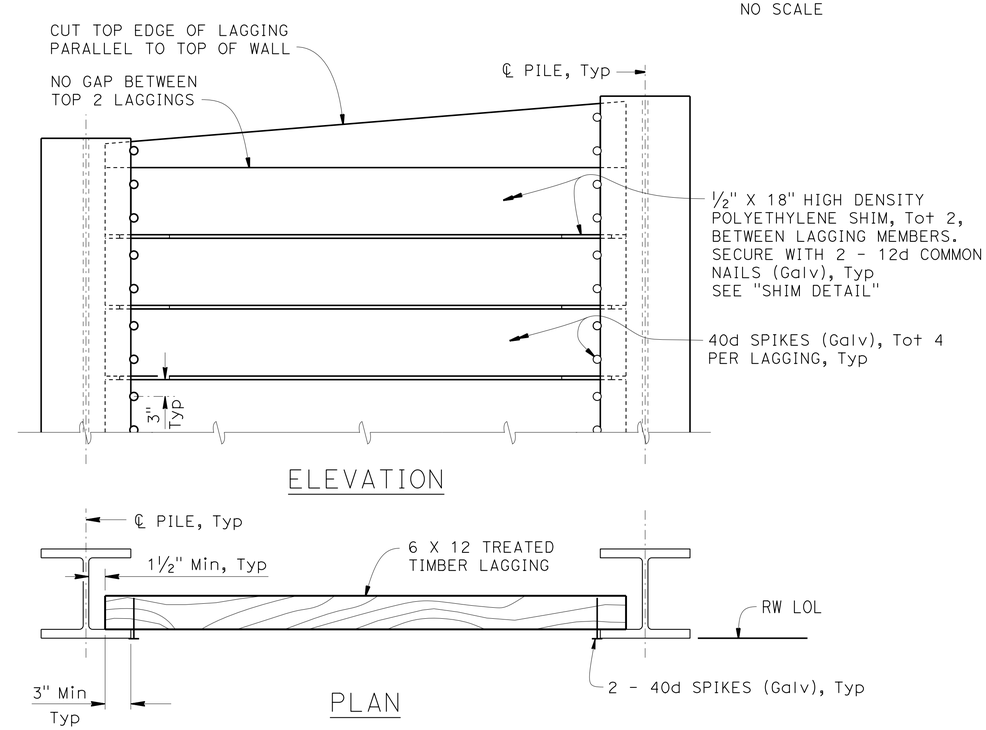

LAGGING DETAILS
NO SCALE

DESIGN	BY Rizia da Cruz Ferreira	CHECKED Glen Lawson	
DETAILS	BY Bob Huddleston	CHECKED Glen Lawson	
QUANTITIES	BY Eric Watson	CHECKED Jin Zhou	

STATE OF CALIFORNIA
DEPARTMENT OF TRANSPORTATION

DIVISION OF ENGINEERING SERVICES
STRUCTURE DESIGN
DESIGN BRANCH 1

BRIDGE NO. 04E0037
POST MILE 111.42

SOLDIER PILE WALL NO. 14
WALL DETAILS

STRUCTURES DESIGN DETAIL SHEET (ENGLISH) (REV. 09-01-10)

ORIGINAL SCALE IN INCHES FOR REDUCED PLANS 0 1 2 3

UNIT: 3576
PROJECT NUMBER & PHASE: 01120001271
CONTRACT NO.: 01-0B4304

DISREGARD PRINTS BEARING EARLIER REVISION DATES

REVISION DATES 10-01-14 03-26-15

SHEET 6 OF 10

FILE => wall14-1-rwdt01.dgn

USERNAME => s132662 DATE PLOTTED => 26-JUL-2016 TIME PLOTTED => 09:58

DIST	COUNTY	ROUTE	POST MILES TOTAL PROJECT	SHEET No.	TOTAL SHEETS
01	Hum	101	111.3/111.7	80	83

Eric Watson 3-4-16
REGISTERED CIVIL ENGINEER DATE

June 20, 2016
PLANS APPROVAL DATE

REGISTERED PROFESSIONAL ENGINEER Eric Watson No. 64273 Exp. 6/30/17 CIVIL STATE OF CALIFORNIA

The State of California or its officers or agents shall not be responsible for the accuracy or completeness of scanned copies of this plan sheet.

NOTES:

(A) Level of initial grouting for drilled hole 6" in diameter or smaller

(B) Level of secondary grouting

(C) Level of initial grouting inside corrugated sheathing

(D) Bonded length must be determined by the contractor

NOTES:

1. Anchorage enclosure must only be used when anchor head assembly is not encapsulated in concrete.
2. Anchorage enclosure must have provisions to allow injecting grout at low end and venting at high end.
3. Silicone sealant to cover full width of flange.
4. Steel tube (Min thickness = 1/4") welded to bearing plate.
5. Steel tube (Min thickness = 1/4") welded to bearing plate. Inside diameter of steel tube to be 1" greater than outside diameter of smooth sheathing.
6. Galvanize assembly after fabrication.

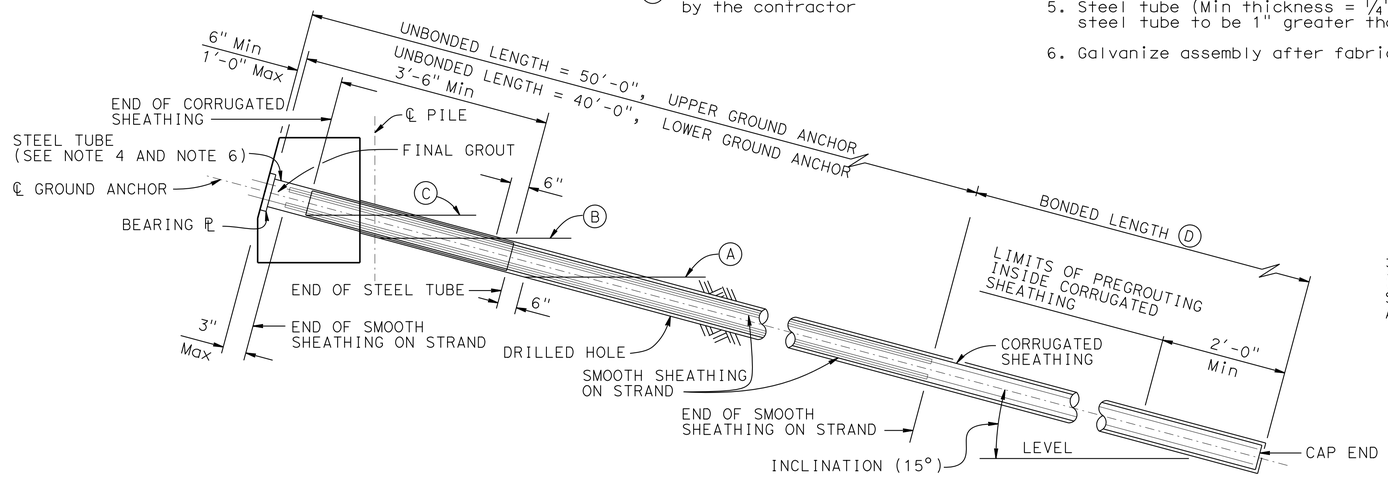

GROUND ANCHOR TENDON DETAIL (STRAND)

NO SCALE

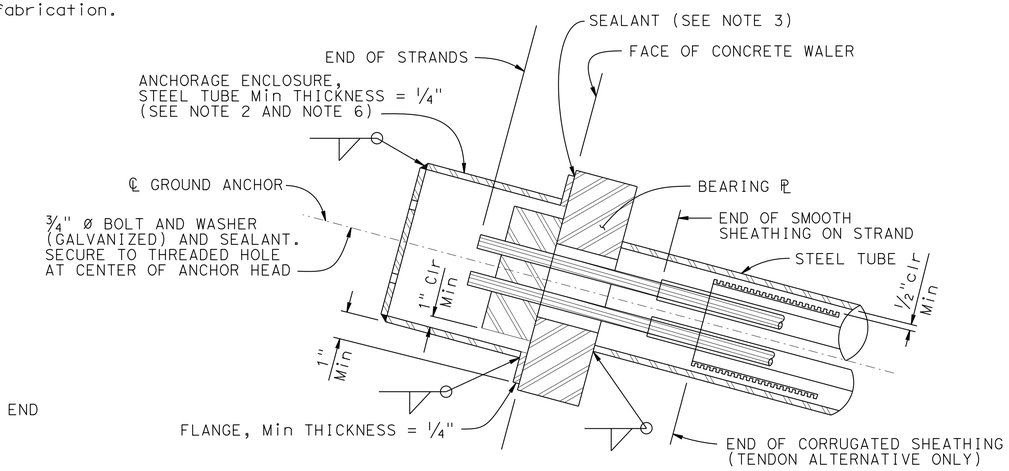

ALTERNATIVE X

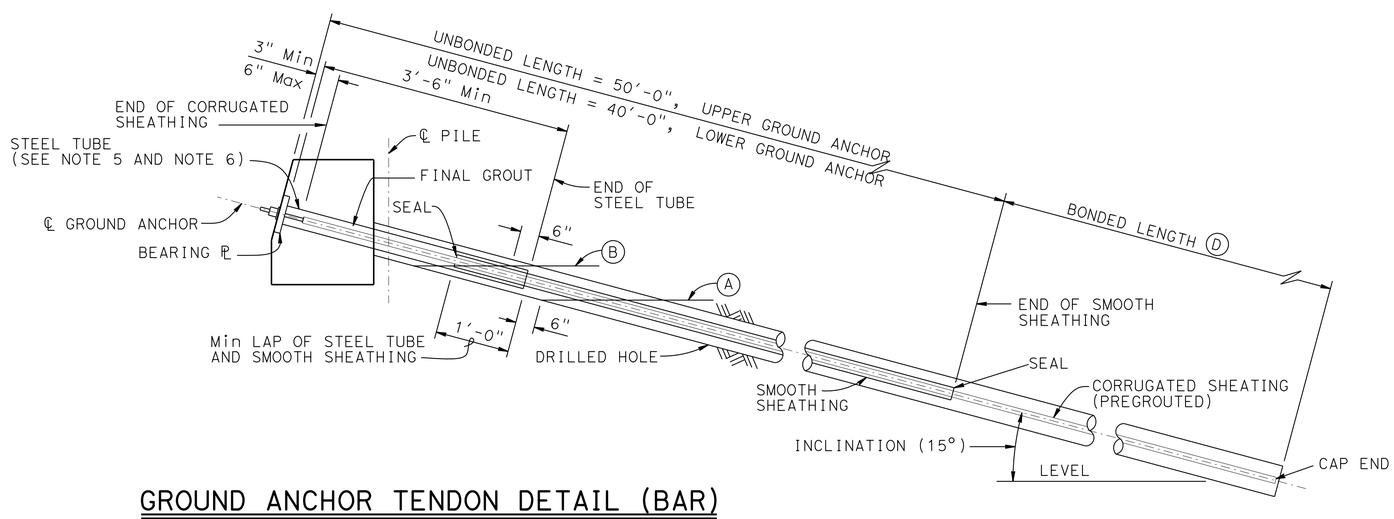

GROUND ANCHOR TENDON DETAIL (BAR)

NO SCALE

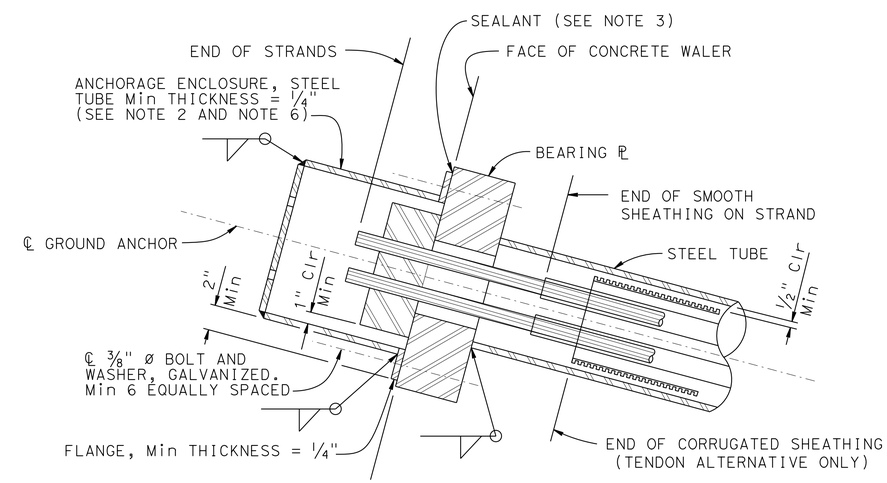

ALTERNATIVE Y

ANCHORAGE ENCLOSURE DETAILS

NO SCALE

DESIGN	BY Rizia da Cruz Ferreira	CHECKED Glen Lawson	
DETAILS	BY Bob Huddleston	CHECKED Glen Lawson	
QUANTITIES	BY Eric Watson	CHECKED Jin Zhou	

STATE OF CALIFORNIA
DEPARTMENT OF TRANSPORTATION

DIVISION OF ENGINEERING SERVICES
STRUCTURE DESIGN
DESIGN BRANCH 1

BRIDGE NO. 04E0037
POST MILE 111.42

SOLDIER PILE WALL NO. 14
GROUND ANCHOR DETAILS

STRUCTURES DESIGN DETAIL SHEET (ENGLISH) (REV. 09-01-10)

ORIGINAL SCALE IN INCHES FOR REDUCED PLANS 0 1 2 3

UNIT: 3576
PROJECT NUMBER & PHASE: 01120001271
CONTRACT NO.: 01-0B4304

DISREGARD PRINTS BEARING EARLIER REVISION DATES

REVISION DATES 10-06-14 03-26-15

SHEET 7 OF 10

FILE => wall14-m-rwdt02.dgn

USERNAME => s132662 DATE PLOTTED => 26-JUL-2016 TIME PLOTTED => 09:58

DIST	COUNTY	ROUTE	POST MILES TOTAL PROJECT	SHEET No.	TOTAL SHEETS
01	Hum	101	111.3/111.7	81	83

Eric Watson 3-4-16
REGISTERED CIVIL ENGINEER DATE

June 20, 2016
PLANS APPROVAL DATE

REGISTERED PROFESSIONAL ENGINEER Eric Watson No. 64273 Exp. 6/30/17 CIVIL STATE OF CALIFORNIA

The State of California or its officers or agents shall not be responsible for the accuracy or completeness of scanned copies of this plan sheet.

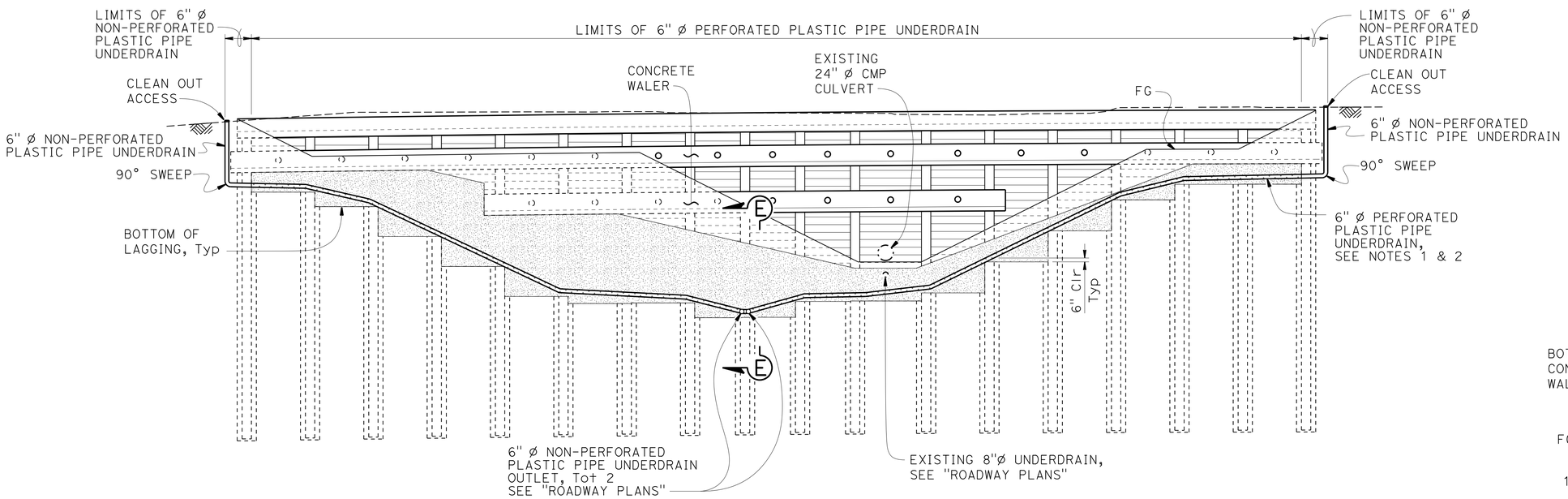

UNDERDRAIN LAYOUT

1/8" = 1'-0"

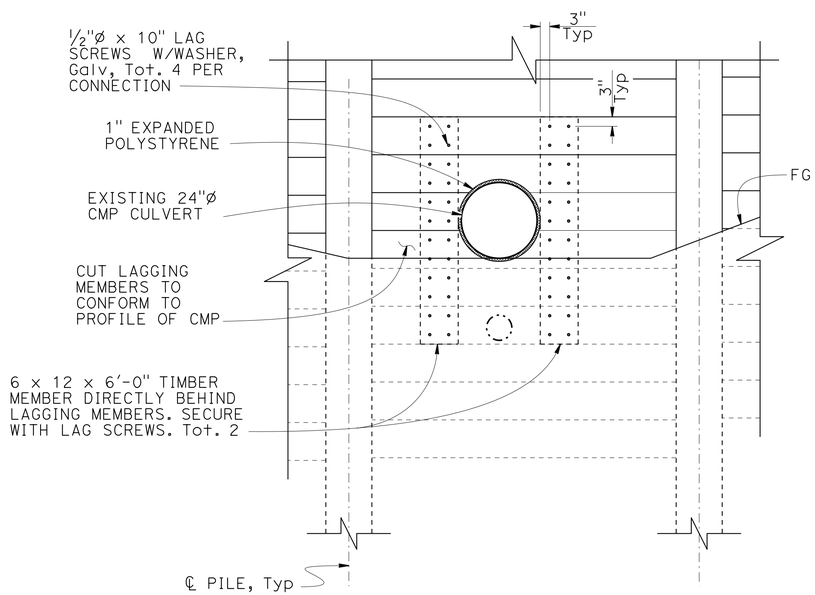

CULVERT PENETRATION DETAIL

1/2" = 1'-0"

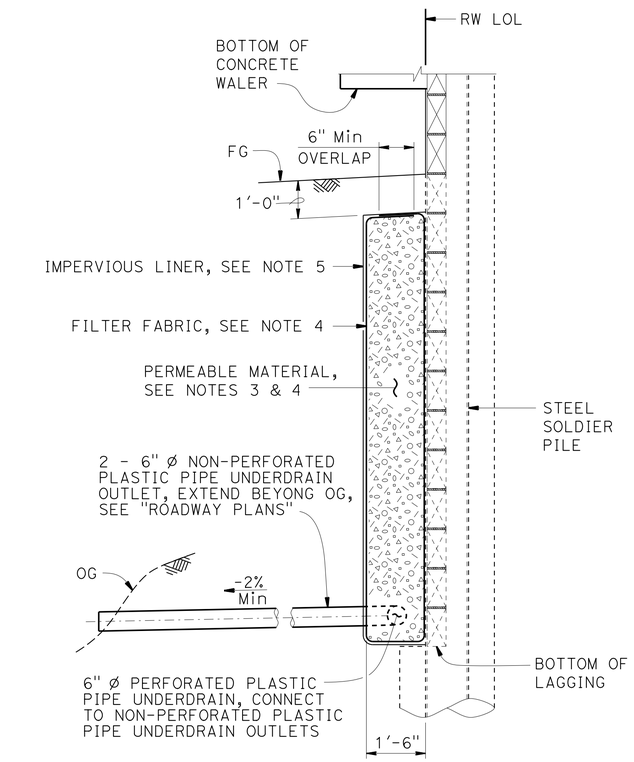

SECTION E-E

1/2" = 1'-0"

NOTES:

1. All underdrains must be placed with a minimum of -2% slope to facilitate drainage.
2. Perforated plastic pipes must have at least 6" clearance above the bottom of lagging at all locations.
3. Permeable material shall extend from bottom of lagging to bottom of concrete waler or 1' below FG, whichever is lower.
4. Permeable material to be placed against lagging and be completely surrounded by filter fabric.
5. Impervious liner to be placed between soil and permeable material only.
6. Clean out accesses are required at both ends of wall.

	BY	CHECKED
DESIGN	Rizia da Cruz Ferreira	Glen Lawson
DETAILS	B Huddleston/G Dickerson	Glen Lawson
QUANTITIES	Eric Watson	Jin Zhou

STATE OF CALIFORNIA
DEPARTMENT OF TRANSPORTATION

DIVISION OF ENGINEERING SERVICES
STRUCTURE DESIGN
DESIGN BRANCH 1

BRIDGE NO. 04E0037
POST MILE 111.42

SOLDIER PILE WALL NO. 14
DRAINAGE DETAILS

STRUCTURES DESIGN DETAIL SHEET (ENGLISH) (REV. 09-01-10)

ORIGINAL SCALE IN INCHES FOR REDUCED PLANS 0 1 2 3

UNIT: 3576
PROJECT NUMBER & PHASE: 01120001271
CONTRACT NO.: 01-0B4304

DISREGARD PRINTS BEARING EARLIER REVISION DATES

REVISION DATES 10-31-14 03-30-15 07-30-15 09/15/15

SHEET 8 OF 10

FILE => wall14-r-dde101.dgn

USERNAME => s132662 DATE PLOTTED => 26-JUL-2016 TIME PLOTTED => 09:58

DIST	COUNTY	ROUTE	POST MILES TOTAL PROJECT	SHEET No.	TOTAL SHEETS
01	Hum	101	111.3/111.7	82	83

Eric Watson
REGISTERED CIVIL ENGINEER 3-4-16
DATE

June 20, 2016
PLANS APPROVAL DATE

REGISTERED PROFESSIONAL ENGINEER
Eric Watson
No. 64273
Exp. 6/30/17
CIVIL
STATE OF CALIFORNIA

The State of California or its officers or agents shall not be responsible for the accuracy or completeness of scanned copies of this plan sheet.

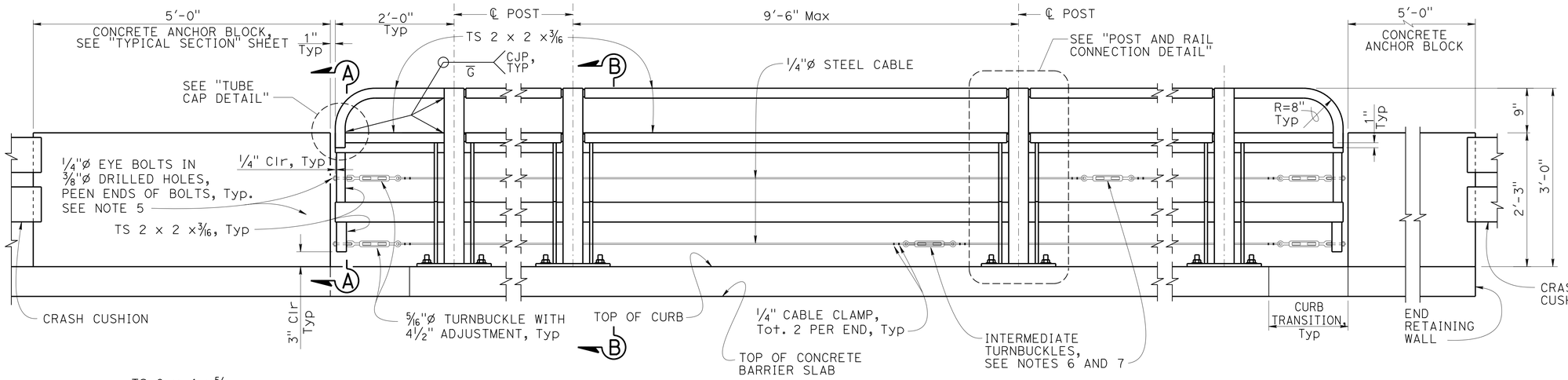

PART MIRRORED ELEVATION

1" = 1'-0"

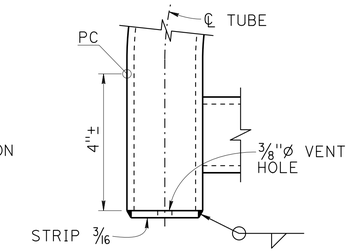

TUBE CAP DETAIL

6" = 1'-0"

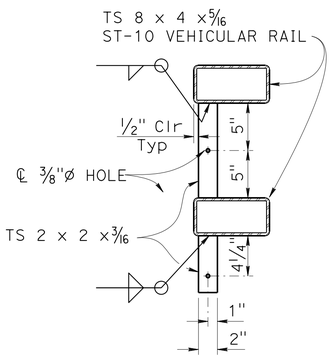

SECTION A-A

1 1/2" = 1'-0"

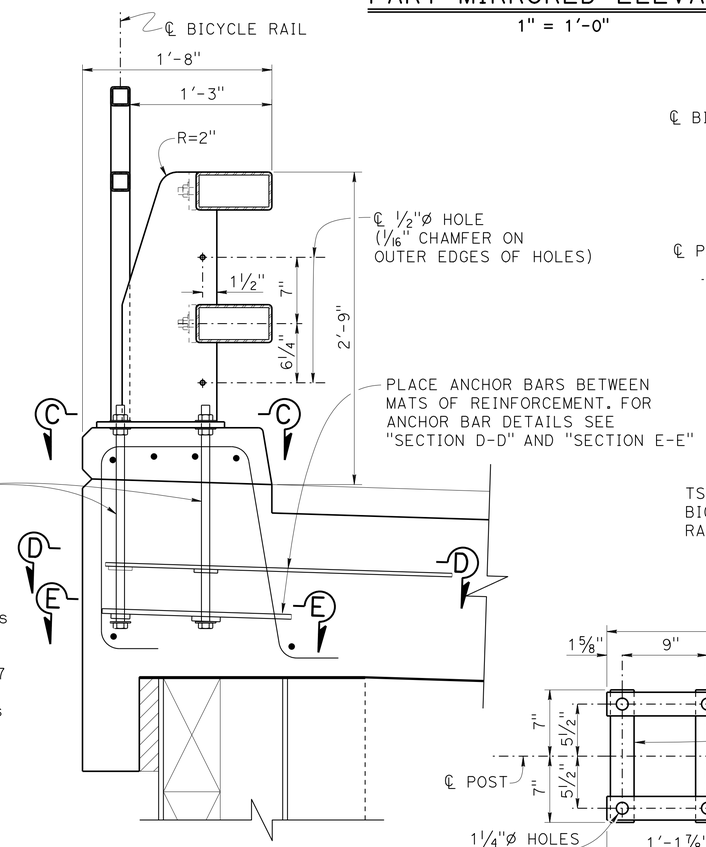

SECTION B-B

1 1/2" = 1'-0"

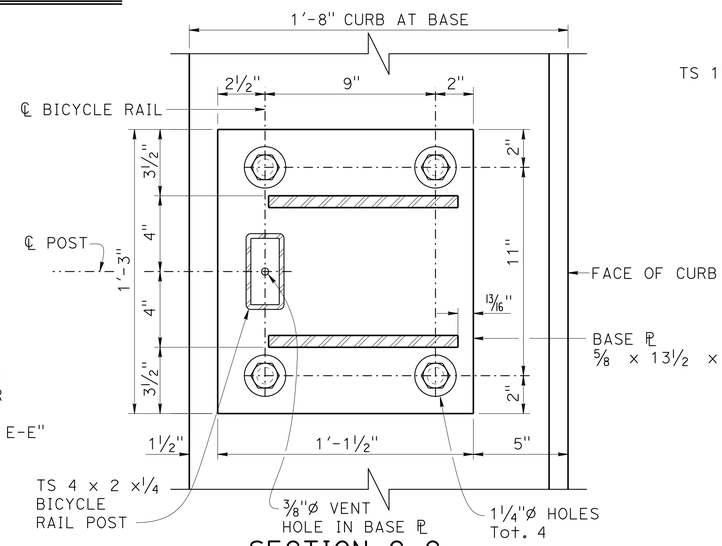

SECTION C-C

3" = 1'-0"

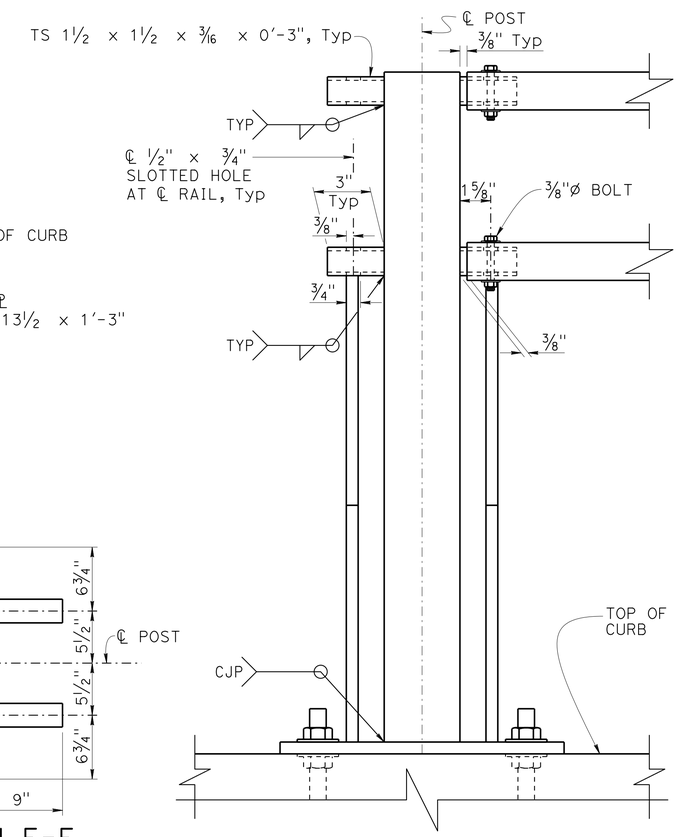

POST & RAIL CONNECTION DETAIL

3" = 1'-0"

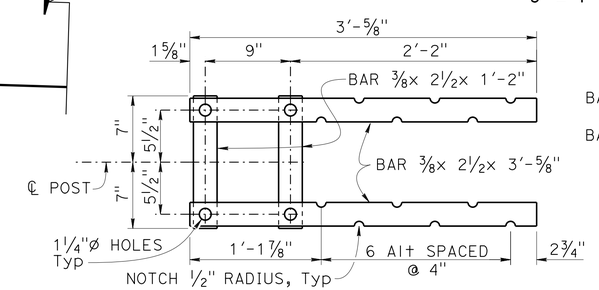

SECTION D-D

1 1/2" = 1'-0"

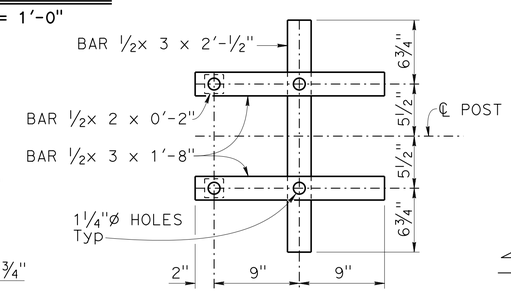

SECTION E-E

1 1/2" = 1'-0"

NOTES:

1. Galvanize rail assembly and all components after fabrication.
2. Posts shall be normal to railing.
3. All bolts and bicycle railing shall be A307 with Thread Locking System.
4. For details not shown, see Standard Plans RSP B11-68, B11-69 and RSP B11-70.
5. See Standard Plans RSP B11-47 for Alternative Cable Connection and Alternative Dead End Anchorage.
6. Maximum distance between turnbuckles shall be 100'.
7. Intermediate Turnbuckles shall be placed in adjacent spans.
8. Cable shall not be spliced between Intermediate Turnbuckles and End Anchorage.
9. Provide Thimbles at all cable loops.

	BY	CHECKED
DESIGN	Rizia da Cruz Ferreira	Glen Lawson
DETAILS	Gerald Dickerson	Glen Lawson
QUANTITIES	Eric Watson	Jin Zhou

STATE OF CALIFORNIA
DEPARTMENT OF TRANSPORTATION

DIVISION OF ENGINEERING SERVICES
STRUCTURE DESIGN
DESIGN BRANCH 1

BRIDGE NO. 04E0037
POST MILE 111.42

SOLDIER PILE WALL NO. 14
CALIFORNIA ST-10 BRIDGE RAIL (MOD) DETAILS

STRUCTURES DESIGN DETAIL SHEET (ENGLISH) (REV. 09-01-10)

ORIGINAL SCALE IN INCHES FOR REDUCED PLANS 0 1 2 3

UNIT: 3576
PROJECT NUMBER & PHASE: 01120001271
CONTRACT NO.: 01-0B4304

DISREGARD PRINTS BEARING EARLIER REVISION DATES

REVISION DATES 10-30-14 04-06-15 06-02-15 09/15/15

SHEET 9 OF 10

FILE => wall14-u-miscdt01.dgn

USERNAME => s132682 DATE PLOTTED => 26-JUL-2016 TIME PLOTTED => 09:58

DIST	COUNTY	ROUTE	POST MILES TOTAL PROJECT	SHEET No.	TOTAL SHEETS
01	Hum	101	111.3/111.7	83	83

REGISTERED CIVIL ENGINEER — DATE 5-18-15

June 20, 2016
PLANS APPROVAL DATE

REGISTERED PROFESSIONAL ENGINEER — Kathy Gallagher — No. C62012 — Exp. 9-30-15 — CIVIL — STATE OF CALIFORNIA

The State of California or its officers or agents shall not be responsible for the accuracy or completeness of electronic copies of this plan sheet.

This LOTB sheet was prepared in accordance with the Caltrans Soil & Rock Logging, Classification, & Presentation Manual (2010 Edition).

See 2010 Standard Plans A10F and A10G for Soil Legend, and A10H for Rock Legend.

BENCH MARK

SUHV 11146 Elev 102.754
"X-NE CONC. SOLAR PAD"
N 2323845.572
E 5981067.290
NAVD 88

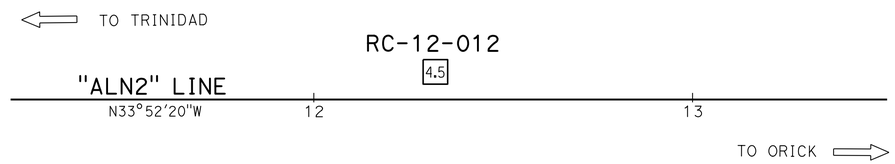

PLAN

1" = 20'

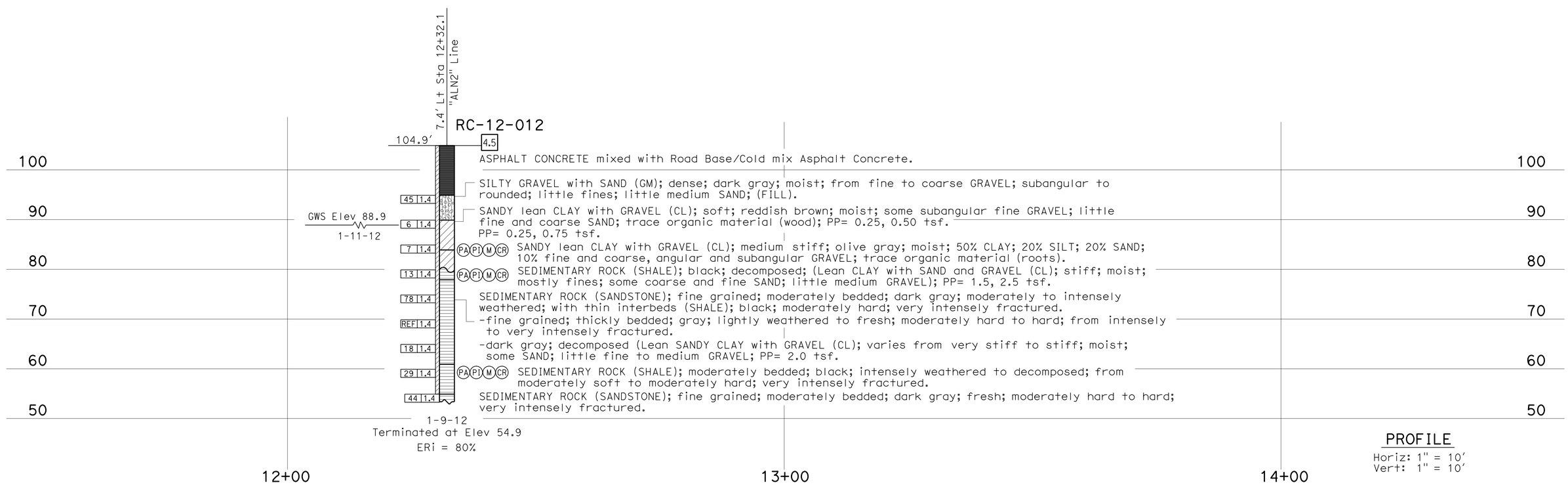

ASPHALT CONCRETE mixed with Road Base/Cold mix Asphalt Concrete.

SILTY GRAVEL with SAND (GM); dense; dark gray; moist; from fine to coarse GRAVEL; subangular to rounded; little fines; little medium SAND; (FILL).

SANDY lean CLAY with GRAVEL (CL); soft; reddish brown; moist; some subangular fine GRAVEL; little fine and coarse SAND; trace organic material (wood); PP= 0.25, 0.50 tsf.

PP= 0.25, 0.75 tsf.

PA PI M CR SANDY lean CLAY with GRAVEL (CL); medium stiff; olive gray; moist; 50% CLAY; 20% SILT; 20% SAND; 10% fine and coarse, angular and subangular GRAVEL; trace organic material (roots).

PA PI M CR SEDIMENTARY ROCK (SHALE); black; decomposed; (Lean CLAY with SAND and GRAVEL (CL); stiff; moist; mostly fines; some coarse and fine SAND; little medium GRAVEL); PP= 1.5, 2.5 tsf.

SEDIMENTARY ROCK (SANDSTONE); fine grained; moderately bedded; dark gray; moderately to intensely weathered; with thin interbeds (SHALE); black; moderately hard; very intensely fractured.

-fine grained; thickly bedded; gray; lightly weathered to fresh; moderately hard to hard; from intensely to very intensely fractured.

-dark gray; decomposed (Lean SANDY CLAY with GRAVEL (CL); varies from very stiff to stiff; moist; some SAND; little fine to medium GRAVEL; PP= 2.0 tsf.

PA PI M CR SEDIMENTARY ROCK (SHALE); moderately bedded; black; intensely weathered to decomposed; from moderately soft to moderately hard; very intensely fractured.

SEDIMENTARY ROCK (SANDSTONE); fine grained; moderately bedded; dark gray; fresh; moderately hard to hard; very intensely fractured.

PROFILE

Horiz: 1" = 10'
Vert: 1" = 10'

ENGINEERING SERVICES	MATERIALS AND GEOTECHNICAL SERVICES	STATE OF CALIFORNIA DEPARTMENT OF TRANSPORTATION	DIVISION OF ENGINEERING SERVICES STRUCTURE DESIGN DESIGN BRANCH 1	BRIDGE NO. 04E0037 POST MILE 111.42	SOLDIER PILE WALL NO. 14 LOG OF TEST BORINGS
FUNCTIONAL SUPERVISOR NAME: C. Narwold	DRAWN BY: I. G-Remmen CHECKED BY: R. Newman	FIELD INVESTIGATION BY: K. Gallagher			

OGS CIVIL LOG OF TEST BORINGS SHEET

ORIGINAL SCALE IN INCHES FOR REDUCED PLANS 0 1 2 3

UNIT: 3650
PROJECT NUMBER & PHASE: 01120001271 CONTRACT NO.: 01-0B4304

DISREGARD PRINTS BEARING EARLIER REVISION DATES

REVISION DATES: 05-06-15 05-08-15 05-18-15

SHEET 10 OF 10

FILE => wall14-z-lotb.dgn

USERNAME => s132662 DATE PLOTTED => 26-JUL-2016 TIME PLOTTED => 09:59